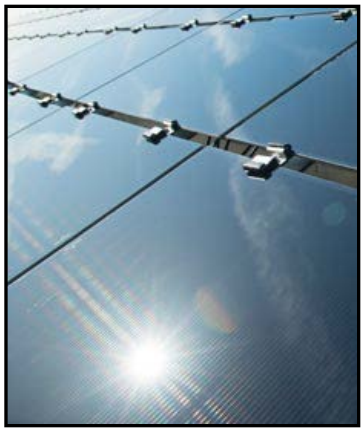

VOLUME 1

FINAL

ENVIRONMENTAL IMPACT STATEMENT

AIYA SOLAR PROJECT

On Behalf of:

THE MOAPA BAND OF PAIUTE INDIANS

BUREAU OF INDIAN AFFAIRS
BUREAU OF LAND MANAGEMENT
ENVIRONMENTAL PROTECTION AGENCY
US FISH AND WILDLIFE SERVICE

FEBRUARY 2016

Volume 1

FINAL

ENVIRONMENTAL IMPACT STATEMENT

(FEIS)

AIYA SOLAR PROJECT

On Behalf of:

THE MOAPA BAND
OF PAIUTE INDIANS

BUREAU OF INDIAN AFFAIRS
BUREAU OF LAND MANAGEMENT
ENVIRONMENTAL PROTECTION AGENCY
US FISH AND WILDLIFE SERVICE

February 2016

Table of Contents

TABLE OF CONTENTS

ACRONYMS USED IN THE EIS **AC-1**

EXECUTIVE SUMMARY **ES-1**

ES.1 INTRODUCTION ES-1
ES.2 PURPOSE AND NEED ES-2
ES.3 PUBLIC INVOLVEMENT ES-3
ES.4 ALTERNATIVES ES-4
ES.5 ENVIRONMENTAL CONSEQUENCES AND MITIGATION ES-5

CHAPTER 1 - PURPOSE AND NEED **1-1**

1.1 PURPOSE AND NEED OF THE PROPOSED PROJECT 1-2
1.2 AGENCY PURPOSE AND NEED 1-3
1.2.1 Agency Purpose *1-3*
1.2.2 Agency Need *1-4*
1.3 SUMMARY OF PUBLIC SCOPING AND ISSUE IDENTIFICATION 1-4
1.3.1 Public Scoping Process *1-4*
1.4 POLICIES AND PROGRAMS 1-6
1.4.1 Relationship to Federal Policies, Plans, and Programs *1-6*
1.5 PERMITS AND APPROVALS REQUIRED FOR THE PROPOSED PROJECT 1-9

CHAPTER 2 - PROPOSED ACTION AND ALTERNATIVES **2-1**

2.1 INTRODUCTION 2-1
2.2 DESCRIPTION OF PROPOSED PROJECT 2-1
2.2.1 Project Overview *2-1*
2.2.2 Project Location and Setting *2-2*
2.2.3 Key Project Elements *2-3*
2.2.4 Onsite Project Facilities *2-5*
2.2.4.1 Solar Field 2-5
2.2.4.2 Onsite Electrical Collection System and Substation 2-7
2.2.4.3 Site Security and Fencing 2-9
2.2.4.4 Operation and Maintenance Facilities 2-9
2.2.4.5 Internal Project-Related Roads 2-10
2.2.4.6 Stormwater Management 2-11
2.2.4.7 Vegetation Management 2-11
2.2.4.8 Landscaping along Reservation Road 2-12
2.2.4.9 Lighting 2-12
2.2.4.10 Wastewater Treatment 2-12
2.2.4.11 Noxious Weed and Pest Control 2-12
2.2.5 Offsite Linear Facilities *2-13*
2.2.5.1 230 kV Transmission Line (Gen-Tie) 2-13
2.2.5.2 Project Access Roads 2-14
2.2.5.3 Electric Distribution Line 2-14
2.2.5.4 Communication Systems Infrastructure 2-14

2.2.5.5 Intake and Water Pipeline 2-15
2.2.6 Temporary Facilities (To be removed following construction) 2-15
2.2.6.1 Water Intake and Water Pipeline 2-15
2.2.6.2 Temporary Construction Workspace, Laydown, Mobilization Areas 2-15
2.2.7 Water Supply 2-16
2.2.8 Waste and Hazardous Materials Management 2-16
2.2.8.1 Nonhazardous Wastes 2-17
2.2.8.2 Hazardous Materials and Hazardous Wastes 2-17
2.2.9 Fire Protection 2-18
2.2.10 Health and Safety Program 2-18
2.2.11 Project Construction 2-19
2.2.11.1 Site Preparation 2-19
2.2.11.2 PV Solar Array Assembly and Construction 2-22
2.2.11.3 Electrical Collection and Transmission System Construction 2-23
2.2.11.4 Road System Construction 2-27
2.2.11.5 Onsite Building Construction 2-27
2.2.11.6 Site Stabilization, Protection and Reclamation 2-28
2.2.11.7 Workforce Schedule, Equipment and Materials 2-28
2.2.11.7 Construction Traffic 2-31
2.2.11.8 Construction Power 2-31
2.2.12 Operation and Maintenance 2-34
2.2.13 DECOMMISSIONING 2-36
2.3 DESCRIPTION OF PROPOSED ALTERNATIVES 2-36
2.3.1 Alternatives Considered and Carried Forward for Detailed Analysis 2-37
2.3.1.1 No Action Alternative 2-37
2.3.1.2 Alternative Gen-Tie Route 2-37
2.3.1.3 Alternative Water Supply 2-37
2.3.2 Alternatives Considered but Eliminated from Detailed Analysis in the EIS 2-38
2.3.2.1 Alternative Reservation Locations 2-38
2.3.2.2 Alternative Off-Reservation Locations 2-39
2.3.2.3 Alternative Interconnection Options 2-39
2.3.2.4 Concentrated Photovoltaic (CPV) Technology 2-39
2.3.2.5 Distributed Solar Generation 2-40
2.3.2.6 Wind Energy 2-40
2.4 FEDERAL, STATE AND LOCAL PERMITTING 2-41

CHAPTER 3 - AFFECTED ENVIRONMENT 3-1

3.1 INTRODUCTION 3-1
3.2 CLIMATE 3-2
3.2.1 Climate Change 3-2
3.2.2 Potential Effects of Climate Change 3-3
3.2.3 Existing Greenhouse Gas Emissions 3-4
3.2.4 Federal Greenhouse Gas Guidance 3-4
3.3 TOPOGRAPHY, GEOLOGY AND GEOLOGIC HAZARDS 3-5
3.3.1 Topography 3-5
3.3.1.1 Land Forms 3-5
3.3.2 Geology 3-5

3.3.2.1 Paleontological Resources ... 3-6
3.3.3 Geologic Hazards ... 3-6
3.3.3.1 Seismicity ... 3-6
3.3.3.2 Faults ... 3-6
3.3.3.3 Ground Motion and Liquefaction ... 3-7
3.4 SOILS ... 3-7
3.4.1 Soil Series Descriptions ... 3-8
3.4.1.1 Bard Series (BHC) ... 3-8
3.4.1.2 Badlands (BD) ... 3-8
3.5 WATER RESOURCES ... 3-9
3.5.1 Surface Water ... 3-9
3.5.1.1 Surface Water Quality ... 3-10
3.5.2 Ground Water ... 3-11
3.5.2.1 Ground Water Quality ... 3-12
3.5.3 Water Rights ... 3-12
3.5.4 Jurisdictional Waters, Drainages, and Riparian Areas ... 3-13
3.6 AIR QUALITY ... 3-14
3.6.1 Existing Ambient Air Quality ... 3-14
3.6.1.1 Significance Thresholds ... 3-14
3.6.2 General Federal Actions ... 3-17
3.6.3 Existing Sources of Air Pollutants ... 3-17
3.7 NOISE ... 3-18
3.7.1 Existing Noise Conditions ... 3-20
3.7.1.1 Regulatory Framework ... 3-20
3.8 BIOLOGICAL RESOURCES ... 3-22
3.8.1 Ecosystems and Biological Communities ... 3-23
3.8.2 Vegetation ... 3-26
3.8.2.1 Riparian Habitats ... 3-27
3.8.2.2 Federally–Listed and Candidate, Threatened or Endangered Plant Species ... 3-28
3.8.2.3 State Protected, Regulated, Listed and BLM Special Status Vegetation Species ... 3-28
3.8.3 Wildlife ... 3-31
3.8.3.1 Terrestrial ... 3-31
3.8.3.2 Aquatic ... 3-32
3.8.3.3 Federally-Listed Candidate, Threatened or Endangered Animal Species ... 3-32
3.8.3.4 State Listed Wildlife, BLM Sensitive Wildlife Species, and Selected Birds Protected under the Migratory Bird Treaty Act and Bald and Golden Eagle Protection Act ... 3-40
3.9 CULTURAL RESOURCES ... 3-43
3.9.1 Cultural History ... 3-43
3.9.2 Historic, Cultural, and Religious Properties ... 3-46
3.9.3 Tribal Consultation ... 3-51
3.10 SOCIOECONOMIC CONDITIONS ... 3-51
3.10.1 Employment and Income ... 3-52
3.10.2 Unemployment ... 3-54
3.10.3 Demographic Trends ... 3-55
3.10.3.1 Environmental Justice ... 3-55
3.10.3.2 Indian Trust Assets ... 3-56
3.10.4 Lifestyle and Cultural Values ... 3-57

3.10.5 Limited English Proficiency ... 3-57
3.10.6 Community Infrastructure / Public Services ... 3-58
3.11 LAND/RESOURCE USE ... 3-61
3.11.1 Planned Land Uses ... 3-61
3.11.2 Hunting, Fishing, Gathering ... 3-62
3.11.3 Grazing Allotments ... 3-62
3.11.4 Mining ... 3-62
3.11.5 Transportation Networks ... 3-63
3.11.5.1 Major Traffic Routes Within or Adjacent to the Proposed Project ... 3-63
3.11.5.2 Existing Traffic Volumes ... 3-63
3.11.6 Airports ... 3-64
3.11.7 Railroads ... 3-65
3.12 SPECIAL MANAGEMENT AREAS ... 3-65
3.12.1 Wilderness ... 3-65
3.12.2 Areas of Critical Environmental Concern ... 3-66
3.12.3 RECREATION ... 3-66
3.13 VISUAL RESOURCES ... 3-66
3.13.1 Visual Resources Inventory ... 3-66
3.13.2 Visual Resource Management Classes ... 3-67
3.13.3 Visibility ... 3-68
3.13.4 Key Observation Points ... 3-69
3.13.4.1 KOP 1 ... 3-69
3.13.4.2 KOP 2 ... 3-70
3.13.4.3 KOP 3 ... 3-70
3.13.4.4 KOP 4 ... 3-70
3.13.4.5 KOP 5 ... 3-70
3.13.4.6 KOP 6 ... 3-71
3.13.4.7 KOP 7 ... 3-71
3.13.4.8 KOP 8 ... 3-71
3.13.4.9 KOP 9 ... 3-72
3.13.4.10 KOP 10 ... 3-72
3.13.4.11 KOP 11 ... 3-72
3.14 PUBLIC HEALTH AND SAFETY ... 3-73
3.14.1 Potential Hazardous Waste/Contaminated Soil and Groundwater ... 3-73
3.14.1.2 Hazardous Materials Management ... 3-73
3.14.2 Fire Hazards ... 3-74
3.14.3 Worker Safety ... 3-74

CHAPTER 4 - ENVIRONMENTAL CONSEQUENCES ... 4-1

4.1 INTRODUCTION ... 4-1
4.2 CLIMATE/ CLIMATE CHANGE ... 4-3
4.2.1 Indicators ... 4-3
4.2.2 Direct and Indirect Effects by Alternatives ... 4-4
4.2.2.1 Proposed Project ... 4-4
4.2.2.2 Gen-Tie Alternative ... 4-5
4.2.2.3 Water Supply Alternative ... 4-5
4.2.2.4 No Action Alternative ... 4-5

4.2.3 Residual Effects *4-5*
4.3 TOPOGRAPHY, GEOLOGY AND GEOLOGIC HAZARDS 4-6
4.3.1 Indicators *4-6*
4.3.2 Direct and Indirect Effects by Alternatives *4-6*
4.3.2.1 Proposed Project 4-6
4.3.2.2 Gen-Tie Alternative 4-8
4.3.2.3 Water Supply Alternative 4-8
4.3.2.4 No Action Alternative 4-8
4.3.3 Residual Effects *4-8*
4.4 SOILS 4-9
4.4.1 Indicators *4-9*
4.4.2 Direct and Indirect Effects by Alternatives *4-9*
4.4.2.1 Proposed Project 4-9
4.4.2.2 Gen-Tie Alternative 4-11
4.4.2.3 Water Supply Alternative 4-11
4.4.2.4 No Action Alternative 4-11
4.4.3 Residual Effects *4-11*
4.5 WATER RESOURCES 4-12
4.5.1 Indicators *4-12*
4.5.2 Direct and Indirect Effects by Alternatives *4-13*
4.5.2.1 Proposed Project 4-13
4.5.2.2 Gen-Tie Alternative 4-17
4.5.2.3 Water Supply Alternative 4-17
4.5.2.4 No Action Alternative 4-18
4.5.3 Jurisdictional Waters, Drainages, and Riparian Areas *4-18*
4.5.4 Residual Effects *4-20*
4.6 AIR QUALITY 4-20
4.6.1 Indicators *4-22*
4.6.2 Direct and Indirect Effects by Alternative *4-22*
4.6.2.1 Proposed Project 4-22
4.6.2.2 Gen-Tie Alternative 4-29
4.6.2.3 Water Supply Alternative 4-30
4.6.2.4 No Action Alternative 4-30
4.6.3 Residual Effects *4-30*
4.7 NOISE 4-30
4.7.1 Indicators *4-30*
4.7.2 Direct and Indirect Effects by Alternatives *4-31*
4.7.2.1 Proposed Project 4-31
4.7.2.2 Gen-Tie Alternative 4-35
4.7.2.3 Water Supply Alternative 4-36
4.7.2.4 No Action Alternative 4-36
4.7.3 Residual Effects *4-36*
4.8 BIOLOGICAL RESOURCES 4-36
4.8.1 Indicators *4-37*
4.8.2 Vegetation *4-37*
4.8.2.1 Vegetation Communities 4-38
4.8.2.2 Special Status Plant Species 4-42

4.8.3 Wildlife *4-44*
4.8.3.1 Direct and Indirect Effects by Proposed Action and Alternatives – Wildlife 4-44
4.8.3.2 Residual Effects - Wildlife 4-47
4.8.4 Special Status Wildlife Species *4-48*
4.8.4.1 Direct and Indirect Effects - Special Status Species 4-48
4.8.4.2 Residual Effects – Special Status Species 4-65
4.9 CULTURAL RESOURCES 4-65
4.9.1 Indicators *4-66*
4.9.2 Direct and Indirect Effects by Alternatives *4-66*
4.9.2.1 Action Alternatives 4-68
4.9.2.2 No Action Alternative 4-68
4.9.3 Residual Effects *4-68*
4.10 SOCIOECONOMIC CONDITIONS 4-68
4.10.1 Direct and Indirect Effects by Alternatives *4-69*
4.10.1.1 Proposed Project 4-69
4.10.1.2 Gen-Tie Alternative 4-77
4.10.1.3 Water Supply Alternative 4-77
4.10.1.4 No Action Alternative 4-77
4.10.2 Residual Effects *4-77*
4.10.3 Environmental Justice Impacts *4-77*
4.10.3.1 Indicators 4-77
4.10.3.2 Direct and Indirect Effects by Alternative 4-78
4.10.4.3 Residual Effects 4-79
4.10.5 Indian Trust Assets *4-79*
4.11 RESOURCE USE PATTERNS 4-79
4.11.1 Indicators *4-79*
4.11.2 Direct and Indirect Effects by Alternatives *4-80*
4.11.2.1 Proposed Project and Action Alternatives 4-80
4.11.2.2 No Action Alternative 4-81
4.11.3 Transportation/Motorized Vehicle Impacts *4-81*
4.11.3.1 Indicators 4-81
4.11.3.2 Direct and Indirect Effects by Alternative 4-82
4.11.3.3 Residual Effects 4-84
4.12 SPECIAL MANAGEMENT AREAS 4-84
4.12.1 Indicators *4-84*
4.12.2 Direct and Indirect Effects by Alternatives *4-84*
4.12.2.1 Proposed Project 4-84
4.12.2.2 Gen-Tie Alternative 4-86
4.12.2.3 Water Supply Alternative 4-86
4.12.2.4 No Action Alternative 4-86
4.12.3 Residual Effects *4-86*
4.13 VISUAL RESOURCES 4-86
4.13.1 Indicators *4-86*
4.13.2 Direct and Indirect Effects by Alternatives *4-87*
4.13.2.1 Proposed Project 4-87
4.13.2.2 Gen-Tie Alternative 4-91
4.13.2.3 Water Supply Alternative 4-92

4.13.2.4 No Action Alternative 4-92
4.13.3 Residual Effects 4-92
4.14 PUBLIC HEALTH AND SAFETY 4-92
4.14.1 Indicators 4-92
4.14.2 Direct and Indirect Effects by Alternatives 4-93
4.14.2.1 Proposed Project 4-93
4.14.2.2 Gen-Tie Alternative 4-97
4.14.2.3 Water Supply Alternative 4-97
4.14.2.4 No Action Alternative 4-97
4.14.3 Residual Effects 4-97
4.15 CUMULATIVE IMPACTS 4-97
4.15.1 Cumulative Projects 4-98
4.15.2 Cumulative Impacts by Resource 4-98
4.15.4.1 Geology, Topography and Geologic Hazards 4-99
4.15.4.2 Soils 4-99
4.15.4.3 Water Resources 4-99
4.15.4.4 Air Quality and Climate 4-100
4.15.4.5 Noise 4-101
4.15.4.6 Biological Resources 4-101
4.15.4.7 Cultural Resources 4-102
4.15.4.8 Socioeconomics 4-103
4.15.4.9 Resource Use Patterns 4-103
4.15.4.10 Transportation/Motorized Vehicle Access 4-103
4.15.4.11 Special Management Areas 4-104
4.15.4.12 Visual Resource 4-104
4.15.4.13 Public Health and Safety 4-105
4.16 UNAVOIDABLE ADVERSE IMPACTS 4-105
4.16.1 Air Quality and Climate 4-105
4.16.2 Soil 4-106
4.16.3 Water Resources/Hydrology 4-106
4.16.4 Noise 4-106
4.16.5 Biological Resources 4-106
4.16.6 Cultural Resources 4-107
4.16.7 Social and Economic Conditions 4-107
4.16.8 Environmental Justice 4-107
4.16.9 Resource Use Patterns 4-107
4.16.10 Energy and Minerals 4-107
4.16.11 Transportation/Motorized Vehicle Access 4-108
4.16.12 Special Management Areas 4-108
4.16.13 Visual Resources 4-108
4.16.14 Public Health and Safety/Hazardous Materials 4-108
4.17 RELATIONSHIP BETWEEN SHORT-TERM USES AND LONG-TERM PRODUCTIVITY OF THE ENVIRONMENT 4-109

CHAPTER 5 - MITIGATION 5-1

5.1 MITIGATION MEASURES – SOILS 5-1
5.2 MITIGATION MEASURES – WATER QUALITY / QUANTITY 5-2
5.3 MITIGATION MEASURES – AIR 5-4

5.4 MITIGATION MEASURES – BIOLOGICAL RESOURCES 5-6
5.5 MITIGATION MEASURES – CULTURAL RESOURCES 5-20
5.6 MITIGATION MEASURES – TRANSPORTATION 5-21
5.7 MITIGATION MEASURES – PUBLIC HEALTH & SAFETY 5-21

CHAPTER 6 - CONSULTATION AND COORDINATION 6-1

6.1 SUMMARY OF PUBLIC SCOPING AND ISSUE IDENTIFICATION 6-1
6.1.1 Public Scoping Period 6-1
6.1.2 Scoping Meetings 6-1
6.1.3 Scoping Response 6-3
6.2 PUBLIC PARTICIPATION SUMMARY 6-3
6.2.1 Distribution of the Draft EIS 6-3
6.2.2 Final EIS Preparation and Distribution 6-3
6.2.3 Record of Decision 6-4
6.2.4 Appeal Rights 6-4
6.3 CONSULTATION WITH OTHERS 6-4
6.3.1 Federal, State, and Local Agencies 6-4
6.3.2 Non-Governmental Organizations 6-5
6.3.3 Native American Tribes 6-6

CHAPTER 7 - LIST OF PREPARERS AND REVIEWERS 7-1

CHAPTER 8 - REFERENCES 8-1

LIST OF TABLES

TABLE ES-1 SUMMARY OF AGENCY DECISIONS TO BE MADE ES-2
TABLE ES-2 COMPARISON OF ALTERNATIVES ES-6
TABLE 1-1 SUMMARY OF AGENCY DECISIONS TO BE MADE 1-3
TABLE 1-2 KEY ISSUES IDENTIFIED DURING SCOPING 1-5
TABLE 1-3 ENVIRONMENTAL LAWS, REGULATIONS, AND POLICIES 1-6
TABLE 1-4 ANTICIPATED PERMITS FOR THE PROPOSED PROJECT 1-10
TABLE 2-1 SUMMARY OF AGENCY LANDS / JURISDICTION 2-2
TABLE 2-2 TEMPORARY AND PERMANENT DISTURBANCE 2-5
TABLE 2-3A WASTES POTENTIALLY GENERATED BY CONSTRUCTION OF THE PROJECT 2-17
TABLE 2-3B HAZARDOUS MATERIALS THAT MAY BE USED DURING OPERATION 2-18
TABLE 2-4A ESTIMATED ON-SITE EQUIPMENT FOR SOLAR PANEL ARRAY AND COLLECTION SYSTEM 2-29
TABLE 2-4B ESTIMATED ON-SITE EQUIPMENT FOR ONSITE SUBSTATION CONSTRUCTION 2-32
TABLE 2-4C ESTIMATED ON-SITE EQUIPMENT FOR GEN-TIE LINE CONSTRUCTION 2-33
TABLE 2-5 ROUTINE MAINTENANCE PROTOCOL 2-34
TABLE 3-1 SOIL SERIES ENGINEERING PROPERTIES 3-8
TABLE 3-2 STATE AND FEDERAL AMBIENT AIR QUALITY STANDARDS AND BACKGROUND CONCENTRATION 3-16
TABLE 3-3 SOUND LEVELS AND RELATIVE LOUDNESS OF TYPICAL NOISE SOURCES 3-19
TABLE 3-4 SUMMARY OF NOISE LEVELS IDENTIFIED AS REQUISITE TO PROTECT PUBLIC HEALTH 3-21
TABLE 3-5 OSHA PERMISSIBLE NOISE EXPOSURES 3-22
TABLE 3-6 VEGETATIVE COVERTYPES WITHIN THE PROJECT AREA SOLAR SITE & ROWS 3-25
TABLE 3-7 PLANT SPECIES OBSERVED ON PROPOSED PROJECT SITE 3-27
TABLE 3-8 STATE PROTECTED AND REGULATED CACTI OBSERVED ON PROPOSED PROJECT SITE 3-30
TABLE 3-9 FEDERALLY LISTED-CANDIDATE THREATENED/ENDANGERED ANIMAL SPECIES CLARK COUNTY, NV ... 3-33
TABLE 3-10 DESERT TORTOISE OBSERVATIONS IN THE PROPOSED PROJECT AREA 3-35
TABLE 3-11 ARCHAEOLOGICAL SITES IN THE PROJECT AREA AND NRHP RECOMMENDATIONS 3-48
TABLE 3-12 POVERTY LEVEL AND MEDIAN HOUSEHOLD INCOME (ESTIMATES) IN 2013 3-53
TABLE 3-13 EMPLOYMENT BY INDUSTRY IN FY 2013 3-54
TABLE 3-14 UNEMPLOYMENT RATES 3-55
TABLE 3-15 POPULATION BY RACE 2010 CENSUS 3-59
TABLE 3-16 NUMBER OF ADULTS WHO SPEAK ENGLISH LESS THAN VERY WELL* 3-60
TABLE 3-17 ROUTES PROVIDING DIRECT OR INDIRECT ACCESS TO THE PROPOSED PROJECT 3-63
TABLE 3-18 AADT SUMMARY NEAR THE PROPOSED PROJECT 3-64
TABLE 4-1 ESTIMATED LAND DISTURBANCE 4-1
TABLE 4-2 SUMMARY OF IMPACTS TO POTENTIALLY JURISDICTIONAL WATERS 4-19
TABLE 4-3 SUMMARY OF PV CONSTRUCTION EMISSIONS 4-26
TABLE 4-4 SUMMARY OF PV OPERATION EMISSIONS 4-27
TABLE 4-5 SUMMARY OF DECOMMISSION EMISSIONS 4-28
TABLE 4-6 TYPICAL CONSTRUCTION EQUIPMENT NOISE LEVELS 4-32
TABLE 4-7 CONSTRUCTION EQUIPMENT NOISE LEVELS VERSUS DISTANCE 4-33
TABLE 4-8 TRANSMISSION LINE VOLTAGE AND AUDIBLE NOISE LEVEL 4-35
TABLE 4-9 IMPACTS TO VEGETATION TYPES BY PROPOSED PROJECT (ACRES) 4-40
TABLE 4-10 TEMPORARY AND LONG-TERM IMPACTS (ACRES) TO DESERT TORTOISE HABITAT 4-51

TABLE 4-11 ONGOING AND REASONABLY FORESEEABLE ACTIONS IN THE PROJECT VICINITY 4-109

LIST OF FIGURES

FIGURE ES-1 – PROJECT LOCATION ES-10
FIGURE ES-2 – PROPOSED PROJECT FACILITIES ES-11
FIGURE 1-1 - PROJECT LOCATION..... 1-10
FIGURE 1-2 - PROJECT LANDS AND SURROUNDING AREA 1-11
FIGURE 2-1 – PROPOSED PROJECT FACILITIES..... 2-42
FIGURE 2-2 –PROJECT SITE LAYOUT 2-43
FIGURE 2-3 – TYPICAL SOLAR ARRAY USING FIXED-TILT OR HORIZONTAL-TRACKING MOUNTING SYSTEM 2-43
FIGURE 2-4 – CROSS-SECTIONAL VIEW OF FIXED-TILT AND HORIZONTAL-TRACKING MOUNTING SYSTEM..... 2-44
FIGURE 2-5 – PROPOSED 230KV GEN-TIE LINE 2-45
FIGURE 2-6 – TYPICAL 230 KV STRUCTURE 2-46
FIGURE 2-7 – GEN-TIE ALTERNATIVE 2-47
FIGURE 3-1 – LOCAL TOPOGRAPHY 3-75
FIGURE 3-2 – SOILS MAP..... 3-76
FIGURE 3-3 – TOPOGRAPHIC POSITION OF SITE..... 3-77
FIGURE 3-4 – SITE DRAINAGE AREAS..... 3-78
FIGURE 3-5 – FEMA FLOOD ZONE MAP 3-79
FIGURE 3-6 – VEGETATIVE COVER TYPES..... 3-80
FIGURE 3-7 – YELLOW-BILLED CUCKOO CRITICAL HABITAT 3-81
FIGURE 3-8 – AREA CENSUS TRACTS..... 3-82
FIGURE 3-9 – DESIGNATED UTILITY CORRIDORS 3-83
FIGURE 3-10 – LOCAL ROAD NETWORK..... 3-84
FIGURE 3-11 – AIRPORT LOCATIONS 3-85
FIGURE 3-12 – VISUAL CLASSIFICATIONS..... 3-86
FIGURE 3-13 – VISIBILITY ANALYSIS 3-87
FIGURE 3-14 – KOP LOCATIONS..... 3-88
FIGURE 3-15 – EXISTING VIEW FROM KOP 1 3-89
FIGURE 3-16 – EXISTING VIEW FROM KOP 2 3-90
FIGURE 3-17 – EXISTING VIEW FROM KOP 3 3-91
FIGURE 3-18 – EXISTING VIEW FROM KOP 4 3-92
FIGURE 3-19 – EXISTING VIEW FROM KOP 5 3-93
FIGURE 3-20 – EXISTING VIEW FROM KOP 6 3-94
FIGURE 3-21 – EXISTING VIEW FROM KOP 7 3-95
FIGURE 3-22 – EXISTING VIEW FROM KOP 8 3-96
FIGURE 3-23 – EXISTING VIEW FROM KOP 9 3-97
FIGURE 3-24 – EXISTING VIEW FROM KOP 10 3-98
FIGURE 3-25 – EXISTING VIEW FROM KOP 11 3-99
FIGURE 3-26 – EXISTING VIEW FROM KOP 12 3-100
FIGURE 4-1 – PROJECT COMPONENTS EVALUATED 4-112
FIGURE 4-2 – VISUAL SIMULATION FROM KOP 1 4-113
FIGURE 4-3 – VISUAL SIMULATION FROM KOP 2 4-114

FIGURE 4-4 – VISUAL SIMULATION FROM KOP 3 4-115
FIGURE 4-5 – VISUAL SIMULATION FROM KOP 4 4-116
FIGURE 4-6 – VISUAL SIMULATION FROM KOP 5 4-117
FIGURE 4-7 – VISUAL SIMULATION FROM KOP 6 4-118
FIGURE 4-8 – VISUAL SIMULATION FROM KOP 7 4-119
FIGURE 4-9 – VISUAL SIMULATION FROM KOP 8 4-120
FIGURE 4-10 – VISUAL SIMULATION FROM KOP 9 4-121
FIGURE 4-11 – VISUAL SIMULATION FROM KOP 10 4-122
FIGURE 4-12 – VISUAL SIMULATION FROM KOP11 4-123

Acronymns

Acronyms Used in the EIS

ADT	Annual Average Daily Traffic
ABPP	Avian and Bat Protection Plan
AC	Alternating Current
ACC	Air-cooled Condenser
ACEC	Areas of Critical Environmental Concern
Ac-ft	Acre-Feet
ADEIS	Administrative Draft Environmental Impact Statement
AFY	Acre-Feet per Year
APE	Area of Potential Effect
ASME	American Society of Mechanical Engineers
APP	Avian Protection Plan
BADCT	Best Available Demonstrated Control
BGEPA	Bald and Golden Eagle Protection Act
BIA	Bureau of Indian Affairs
BLM	Bureau of Land Management
Blvd.	Boulevard
BMPs	Best Management Practices
CAA	Clean Air Act
CDP	Census Designated Place
CEQ	Council on Environmental Quality
CFR	Code of Federal Regulations
cfs	Cubic Feet Per Second
cm	Centimeter
CO	Carbon Monoxide
CO2e	CO2 Equivalent
CPV	Concentrating Photovoltaic
CSI	Coyote Springs Investment
CSP	Concentrating Solar Power
CT	Census Tract
CWA	Clean Water Act
DAQEM	Department of Air Quality and Environmental Management
DEIS	Draft Environmental Impact Statement
DEMs	Digital Elevation Models
DOT	Department of Transportation
DWMA	Desert Wildlife Management Area
EIS	Environmental Impact Statement
EPA	Environmental Protection Agency
EPC	Engineering, Procurement and Construction
EPRI	Electric Power Research Institute
ESA	Endangered Species Act

FEIS	Final Environmental Impact Statement
FEMA	Federal Emergency Management Agency
FHWA	Federal Highway Administration
FLPMA	Federal Land Policy Management Act
FTE	Full-time Equivalent
GHG	Greenhouse Gas
GIS	Geographic Information System
gpm	Gallons per Minute
GPS	Global Positioning System
HA	Hydrographic Area
HMA	Herd Management Area
hp	Horsepower
I-15	Interstate 15
IBC	International Building Code
IECC	International Energy Conservation Code
IPCC	Intergovernmental Panel on Climate Change
IPP	Intermountain Power Project
ITA	Indian Trust Assets
JD	Jurisdictional Determination
KOPs	Key Observation Points
K Road	K Road Moapa Solar LLC
kV	Kilovolt
LEP	Limited English Proficiency
LOS	Level of Service
LWC	Lands with Wilderness Characteristics
m	Meter
MBTA	Migratory Bird Treaty Act
mm	Millimeter
MOA	Memorandum of Agreement
mph	Miles per Hour
MMT	Million Metric Tons
MSDS	Material Safety Data Sheet
MSEC	Moapa Solar Energy Center
MSHCP	Multiple Species Habitat Conservation Plan
MVWD	Meadow Valley Water District
MW	Megawatt
MWac	Megawatts of alternating current
NAAQS	National Ambient Air Quality Standards
NAC	Nevada Administrative Code
NAD	North American Datum
NCCAC	Nevada Climate Change Advisory Committee
NDEP	Nevada Department of Environmental Protection
NDOT	Nevada Department of Transportation
NDOW	Nevada Department of Wildlife

NDWR	Nevada Division of Water Resources
NEC	National Electric Code
NEMA	National Electrical Manufacturers Association
NEPA	National Environmental Policy Act
NESC	National Electrical Safety Code
NFPA	National Fire Protection Association
NNHP	Nevada Natural Heritage Program
NOA	Notice of Availability
NO2	Nitrogen Dioxide
NOI	Notice of Intent
NOx	Nitrogen Oxide
NPDES	National Pollution Discharge Elimination System
NPS	National Park Service
NRCS	National Resources Conservation Service
NRHP	National Register of Historic Places
NRS	Nevada Revised Statute
NSR	New Source Review
NV	Nevada
O3	Ozone
O&M	Operations and Maintenance
OEM	Original Equipment Manufacturer
OHV	Off Highway Vehicle
OSHA	Occupational Safety and Health Administration
Pb	Lead
PBO	Programmatic Biological Opinion
PCEs	Primary Constituent Elements
PCS	Plant Control System
PM	Particulate Matter
PM10	Particulate Matter 10 Microns or Less
PM2.5	Particulate Matter 2.5 Microns or Less
PLC	Programmable Logic Controller
POD	Plan of Development
PPA	Power Purchase Agreement
PPE	Personal Protective Equipment
psi	Pound(s) per Square Inch
PV	Photovoltaic
PVC	Polyvinyl Chloride
RCRA	Resource Conservation Recovery Act
Reservation	Moapa River Indian Reservation
RO	Reverse Osmosis
ROD	Record of Decision
ROW	Right(s) of Way
RPA	Remotely Piloted Aircraft Systems
RPS	Renewable Portfolio Standard

SCADA	Supervisory Control and Data Acquisition
SHPO	State Historic Preservation Office
SIP	State Implementation Plan
SMAs	Special Management Areas
SNWA	Southern Nevada Water Authority
SO2	Sulfur dioxide
SPCC	Spill Prevention, Control and Countermeasures Plan
SWIP	Southwest Intertie Project
SWPPP	Storm Water Pollution Prevention Plan
T&E	Threatened and Endangered
TDS	Total Dissolved Solids
TES	Thermal Energy Storage
TERO	Tribal Employment Rights Ordinance
Travel Plaza	Moapa Travel Plaza
Tribe	Moapa Band of Paiute Indians
TSDF	Treatment, Storage and Disposal Facility
µm	Micrometer
UMC	Uniform Mechanical Code
UPC	Uniform Plumbing Code
URTD	Upper Respiratory Tract Disease
U.S.	United States
USACE	United States Army Corps of Engineers
USCB	United State Census Bureau
USDA	United States Department of Agriculture
USDI	United States Department of the Interior
USFS	United States Forest Service
USFWS	United States Fish and Wildlife Service
USGCRP	United States Global Change Research Program
USGS	United States Geological Survey
USTs	Underground Storage Tanks
UTM	Universal Transverse Mercator
VOC	Volatile Organic Compounds
VRI	Visual Resource Inventory
VRM	Visual Resource Management
WEAP	Worker Environmental Awareness Program
WSA	Wilderness Study Areas
°C	Degrees Centigrade
°F	Degrees Fahrenheit

Executive Summary

EXECUTIVE SUMMARY

The following sections summarize the Final Environmental Impact Statement (FEIS) for the Aiya Solar Project. This information is provided as an overview for the public, but is not a substitute for review of the complete FEIS.

This executive summary provides a general overview of the Proposed Project and its purpose and need. It also briefly describes the Proposed Actions by the Bureau of Indian Affairs (BIA) as the lead agency and the U.S. Bureau of Land Management (BLM) as a cooperating agency who will both use this EIS to make their respective decisions. The Moapa Band of Paiutes (Tribe), U.S. Environmental Protection Agency (EPA), and the US Fish and Wildlife Service (USFWS) are also cooperating agencies on this EIS. The USFWS will use this information to render their decision under Section 7 of the Endangered Species Act (ESA).This executive summary also outlines the Proposed Project and alternatives considered in this EIS as well as the environmental impacts that would occur if they were implemented.

Aiya Solar Project, LLC (Aiya Solar or Applicant) has entered into an agreement with the Tribe to lease land, for up to 50 years (30 years plus two 10-year renewal options), on the Moapa River Indian Reservation (Reservation) for the purposes of operating and maintaining the Aiya Solar Project and associated infrastructure. Prior to the up to 50-year operational period, the lease would provide up to four years for construction and after up to an additional year for decommissioning. The Proposed Project would generate electricity using photovoltaic (PV) technology and would generate up to 100 megawatts (MW).

The Tribe is federally recognized and has a Constitution approved by the Secretary of the Interior on April 17, 1942. The tribal lands originally set aside in 1874 consisted of two million acres, but in 1876 it was reduced to a thousand acres. In December 1980, Congress added approximately 70,000 acres to the Tribal land base. The stated purpose of the restoration of these Tribal lands was to provide economic development opportunities. The current total land base is 71,954 acres and is held in trust by the U.S. government for the Tribe.

ES.1 INTRODUCTION

The Proposed Project would be located approximately 40 miles northeast of Las Vegas in Clark County, Nevada (**Figure ES-1**). The proposed solar site, portions of the 230 kV generation interconnection (gen-tie) line, and an associated temporary water pipeline would be located on wholly on the Reservation. A portion of the proposed gen-tie line would be located on Federal lands administered by the BLM south of the Reservation. The Proposed Project would be located on approximately 900 acres of land within the Reservation and up

to 13 acres of BLM-administered land for associated rights-of-way (ROWs). **Figure ES-2** shows the locations of the components of the Proposed Project.

The BIA purpose, pursuant to 25 United States Code (U.S.C.) §415, is to deny, grant, or grant with modifications the solar energy ground lease for the generation facility and associated right-of-way (ROW) agreements between the Tribe and Applicant for the water pipeline and the portions of the gen-tie line located on the Reservation.

The BLM decision to be made is to deny, grant, or grant with modifications the ROW grants under Title V of the Federal Land Policy and Management Act (FLPMA) (43 U.S.C. § 1761(a)) to construct, operate, maintain and decommission the portion of the proposed gen-tie line on BLM lands. The application for the gen-tie ROW is BLM ROW application N-093564. This ROW would be in compliance with FLPMA, BLM ROW regulations (43 Code of Federal Register (CFR) § 2800), and other applicable Federal and Nevada state laws and policies. The BLM will decide whether to deny the proposed ROW, grant the ROW, or grant the ROW with modifications. Modifications may include modifying the proposed use or changing the route or location of the proposed ROW (43 CFR § 2805.10(a)(1)).

The BIA and BLM decisions, if approved, would assist in addressing the management objectives in the Energy Policy Act of 2005 (Title II, Section 211) and Secretarial Order 3285A1 (March 11, 2009) that established the development of environmentally responsible renewable energy as a priority for the Department of the Interior.

Table ES-1 summarizes the agency actions for the Proposed Project.

Table ES 1
SUMMARY OF AGENCY DECISIONS TO BE MADE

Agency	Action
BIA	Approval of solar energy ground lease
	Approval of ROWs for portions of the 230 kV gen-tie line and the temporary water pipeline located solely on the Reservation
BLM	Approval of ROW for portions of the 230 kV gen-tie line located on Federal lands managed by the BLM
Tribe	Approval of lease and ROWs for portions of the 230 kV gen-tie line and water pipeline located solely on the Reservation

ES.2 PURPOSE AND NEED

The Applicant proposes to construct, operate, and maintain the Aiya Solar Project and associated infrastructure (the Proposed Project). **Figure ES-1** shows the Project location.

The Proposed Project would generate electricity using PV technology and would generate up 100 megawatts (MW) of energy.

The primary purpose and needs for the Proposed Project are to: 1) create an economic development opportunity for the Tribe by providing a long-term economically viable revenue source (lease income) and creating new jobs and employment opportunities for Tribal members; and 2) develop clean renewable electricity generation from the Tribe's solar resources that can be efficiently connected to the regional grid that would assist the Federal Government, the State of Nevada, and neighboring states meet their renewable energy goals. The Proposed Project would also help meet the goals of the Federal Government to eliminate or reduce greenhouse gas (GHG) emissions and promote the deployment of renewable energy technologies.

The Tribe identified the Proposed Project as a viable opportunity to meet its economic development goals, because the lease would provide much needed revenue to the Tribe while occupying a small portion of the Reservation (1.5 percent). In addition, construction and operation of the Project would afford employment opportunity to tribal members. The Proposed Project would also be consistent with the Tribe's tradition of respect for the land and would fulfill the purposes for which the 70,000 acres were restored to the Tribe by the Federal Government in 1980 (Moapa Paiutes, n.d.).The use of the Tribe's water by the Proposed Project would help the Tribe affirm and sustain its rights to the water.

Because the Proposed Project met their objectives, the Tribe forwarded their intent to enter into the lease agreement to the BIA to initiate the environmental review process for the proposed 100 MW Aiya Solar Project.

ES.3 PUBLIC INVOLVEMENT

Draft EIS

The BIA published a Notice of Intent (NOI) to prepare an EIS for the Proposed Project in the *Federal Register* on November 21, 2014. In addition, notices were placed in local newspapers and two public scoping meetings were held for the Proposed Project - one on the Reservation on January 14, 2015 and the other at the BLM offices located in Las Vegas, Nevada on January 15, 2015.

The key issues were identified by interested stakeholders and members of the public during scoping for the Proposed Project and include:

- Potential impacts to desert tortoise, Moapa dace, birds, and other sensitive species
- Potential impacts to vegetation and cacti species
- Socioeconomic impacts to tribal members and the regional economy
- Impacts to other existing and proposed land uses in the area.

- Impacts to air quality and climate change
- Impacts to water resources including the use of water and effects to ephemeral drainages
- Visibility of the project from Highway 168, Reservation Road, and the Old Spanish National Historic Trail
- Impacts from cumulative projects in the vicinity of the Proposed Project

Comments on Draft EIS

The BIA published a Notice of Availability (NOA) announcing the publication of the DEIS for the Proposed Project in the *Federal Register* on May 5, 2015. In addition, notices were placed in local newspapers and two public meetings were held to receive comments on the DEIS for the Proposed Project - one on the Reservation on June 17, 2015 and the other at the BLM offices located in Las Vegas, Nevada on June 18, 2015.

ES.4 ALTERNATIVES

This document analyzes two project alternatives plus the No Action Alternative. This document also discusses alternatives that were considered but eliminated from further consideration. The Proposed Project is the Proposed Action. The alternatives are described in detail in Chapter 2 and are summarized below.

The Proposed Project

The Aiya Solar Project solar site is located entirely on the Reservation. Major on-site facilities are the solar field (blocks of photovoltaic panels mounted on fixed tilt or tracking systems and associated equipment), a project substation, and operation and maintenance (O&M) facilities. The off-site facilities include an approximately 2.5-mile 230 kilovolt (kV) transmission line (gen-tie) located on the Reservation, BLM-administered lands, and private lands owned by NV Energy. Additional offsite facilities include short access roads to connect the Project to State Highway 168; a temporary intake in the Muddy River and corresponding temporary water delivery pipeline, and electric distribution and communication lines, all of which would be located on the Reservation. Temporary facilities, which would be removed at the end of the construction period, include the offsite water intake and pipeline, laydown, and construction areas and water storage tanks that would also be located on the Reservation.

Alternative Gen-Tie Route

Another potential route would originate on tribal lands at a solar project substation location south of Highway 168. From this substation, it would cross about 0.8 miles of Reservation land following an existing right-of-way (ROW) on the Reservation south-southeast for about

0.4 miles to a point where it would turn southeast and enter BLM-administered lands at a location similar to where the proposed gen-tie route enters BLM lands

Alternative Water Supply

An alternative source of construction water would be groundwater using existing water rights owned by the Moapa Band of Paiutes. Under this alternative a well would be drilled on the Project site and water would be delivered from the well to the temporary storage tanks via a temporary pipeline constructed aboveground.

If the well alternative is used to provide construction water, the well would be drilled on the solar site to a depth of up to 1,000 feet using a truck-mounted drilling rig with supporting equipment for water supply and drilling fluid management.

The No Action Alternative

Under NEPA, the BIA and cooperating agencies must consider an alternative that assesses the impacts that would occur if the Project were not constructed and the lease agreement and ROWs were not approved. The No Action Alternative assumes that the lease agreement is denied, the BLM utility ROWs are not issued, and the solar Project is not built. Under the No Action Alternative, the purpose and need of the Project would not be met. The Tribe would not benefit economically from the energy production that can be obtained from their prime solar resources and the development of sustainable renewable resources would not occur. The Federal government, Nevada, and neighboring states would not be assisted in their efforts to meet their renewable energy goals.

ES.5 ENVIRONMENTAL CONSEQUENCES AND MITIGATION

The environmental consequences of the alternatives analyzed within the FEIS are summarized in **Table ES-2**. Mitigation measures have been identified where feasible and practical to address specific effects regardless of whether they are considered significant. Resource protection measures identified in the planning and design process have been incorporated into the project description. In addition, mitigation measures have been identified to address specific effects identified during the preparation of the FEIS.

Table ES-2 provides a side-by-side comparison summary of the environmental impacts of constructing, operating, maintaining, and decommissioning the solar project as analyzed in the Proposed Project, the Water Supply Alternative, the Gen-Tie Alternative, and the No Action Alternative. Details of the expected Impacts and proposed mitigation are found in Chapters 4 and 5 of the FEIS, respectively.

Table ES 2
Comparison of Alternatives

Resource	Proposed Project	Alternative Water Supply	Gen-Tie Alternative	No Action Alternative	Mitigation
Climate	Short term direct and indirect impacts with contribution of NO_x and VOCs during construction; long term benefits in reduction of GHG due to non-fossil fuel energy generation.	Same as Proposed Project	Same as Proposed Project	No direct or indirect effects to climate or emissions of GHGs. No long term benefit of GHG reduction	See air quality
Topography	Limited grading. No direct, indirect or cumulative impacts	Same as Proposed Project	Same as Proposed Project	No direct, indirect or cumulative impacts	No mitigation recommendations
Geology	No direct, indirect or cumulative impacts	Same as Proposed Project	Same as Proposed Project	No direct, indirect or cumulative impacts	No mitigation recommendations
Soils	Short-term and potentially long-term direct and indirect impacts from clearing of vegetation, grading, increased erosion and compaction	Similar to Proposed Project but 2-mile temporary above-ground pipeline would not be built	Similar to Proposed Project. Slightly shorter gen-tie	No direct, indirect or cumulative impacts	Site Restoration and Revegetation Plan; Stormwater Pollution Prevention Plan (SWPPP)
Water Resources (surface)	Short-term direct effects for contamination during construction and operations; Short and long-term effects to downstream flooding and sedimentation during high rain events. Sort-term use of water from the Muddy River during the 12-15 month construction period would have small impact on flows and water quality but should not impact downstream habitats or water users.	Similar impacts to surface waters from construction activities as Proposed Project. Impacts associated with short-term surface water withdrawal would not occur.	Same as Proposed Project	No direct, indirect or cumulative impacts	Emergency response plan and Spill Prevention Control and Countermeasure Plan (SPCC), SWPPP, maintenance of existing drainage patterns, erosion control measures.

Table ES 2
Comparison of Alternatives

Resource	Proposed Project	Alternative Water Supply	Gen-Tie Alternative	No Action Alternative	Mitigation
Water Resources (ground)	No direct impacts to ground water.	Withdrawal of up to 500 AF of groundwater during 12-15 month construction period. Would have imperceptible impacts to groundwater levels and spring flows.	Same as Proposed Project	No direct, indirect or cumulative impacts	No recommendations
Air Quality	Short-term direct and indirect effects as a result of fugitive dust and vehicle/generator emission during construction. Long- term and cumulative benefits by offsetting emissions from fossil fuel energy generation.	Same as Proposed Project	Same as Proposed Project	No direct, indirect or cumulative impacts	Limit vehicular speeds on non- paved roads, apply water or dust suppressants, stop work during high winds, Site Restoration and Revegetation Plan.
Noise	No direct or indirect short-term, long-term or cumulative effects due to no nearby receptors. Short- term direct effects to resident wildlife would occur.	Similar to Proposed Project but greater construction impacts from longer construction period		No direct, indirect or cumulative impacts	No recommendations
Vegetation	Short and long-term direct and indirect effect to up to 672 acres of vegetation from construction and operation activities, potential spread of invasive or noxious species.	Same as Proposed Project	Same as Proposed Project. Slightly shorter gen-tie but in same cover types.	No direct, indirect or cumulative impacts	Site Restoration and Revegetation Plan, Weed Management Plan,
Wildlife	Short and long-term direct and indirect effects to up to 672 acres of habitat, nuisance from noise and human presence during construction and operations.	Same as Proposed Project.	Same as Proposed Project. Slightly shorter gen-tie but in same habitats.	No direct, indirect or cumulative impacts	Worker environmental awareness program, biological monitors onsite during construction.

Table ES 2
Comparison of Alternatives

Resource	Proposed Project	Alternative Water Supply	Gen-Tie Alternative	No Action Alternative	Mitigation
Special Status Species	Short and long-term direct and indirect adverse impacts to desert tortoise as a result of loss of about 656 acres of tortoise habitat and foraging area. Short and long-term indirect effects to golden eagles as a result of loss of foraging habitat. Incremental adverse cumulative effects to desert tortoise. No potential adverse effect to Moapa dace.	Same tortoise and golden eagle impacts as Proposed Project. No expected effect to Moapa dace from groundwater withdrawal because of small amount and short duration of use.	Same as Proposed Project. Slightly shorter gen-tie but in same habitats.	No direct, indirect or cumulative impacts	Worker awareness program, reduced vehicle speed limits, biological monitors onsite during construction, Weed Management Plan, design avian safe transmission towers.
Cultural Resources	Four eligible or potentially eligible historic properties located within the APE would be adversely affected. Visible from portions of Old Spanish National Historic Trail (OSNHT) but at significant distance where would not be apparent to viewer.	Same as Proposed Project	Same as Proposed Project	No direct, indirect or cumulative impacts	Memorandum of Agreement (MOA) between the Tribe, BIA, BLM, and SHPO will define measures to mitigate impacts to four adversely affected properties.
Socioeconomics	Beneficial short and long-term direct and indirect impacts from increases in employment, population and local spending, economic stimulus to the Tribe and incremental contribution to cumulative beneficial impacts.	Same as Proposed Project	Same as Proposed Project	Short and long-term adverse impacts from no economic stimulus to the Tribe and local area	No recommendations

Table ES 2 Comparison of Alternatives					
Resource	**Proposed Project**	**Alternative Water Supply**	**Gen-Tie Alternative**	**No Action Alternative**	**Mitigation**
Transportation	Short-term direct and indirect impacts due to construction workforce and commercial truck traffic during construction; negligible long-term impacts from operational traffic.	Same as Proposed Project	Same as Proposed Project	No direct, indirect or cumulative impacts	Implementation of Traffic Management Plan during construction
Visual Resources	Proposed Project would be visible from Highway 168 and local roads. Most potential views from I-15 would be blocked by intervening topography. Visible from portions of Old Spanish National Historic Trail but at significant distance where would not be apparent to viewer.	Same as Proposed Project.	Similar to Proposed Project. As this gen-tie route also occurs in an area with significant existing transmission infrastructure.	No direct, indirect or cumulative impacts	Berms will be located along Reservation Road to block views of solar field.
Public Health and Safety	Minimal potential for onsite and off-site direct and indirect impacts due to handling and storage of hazardous materials	Same as Proposed Project.	Same as Proposed Project.	No direct, indirect or cumulative impacts	Hazardous Waste Storage Plan; Spill Prevention and Countermeasure Plan; Health and Safety Programs.

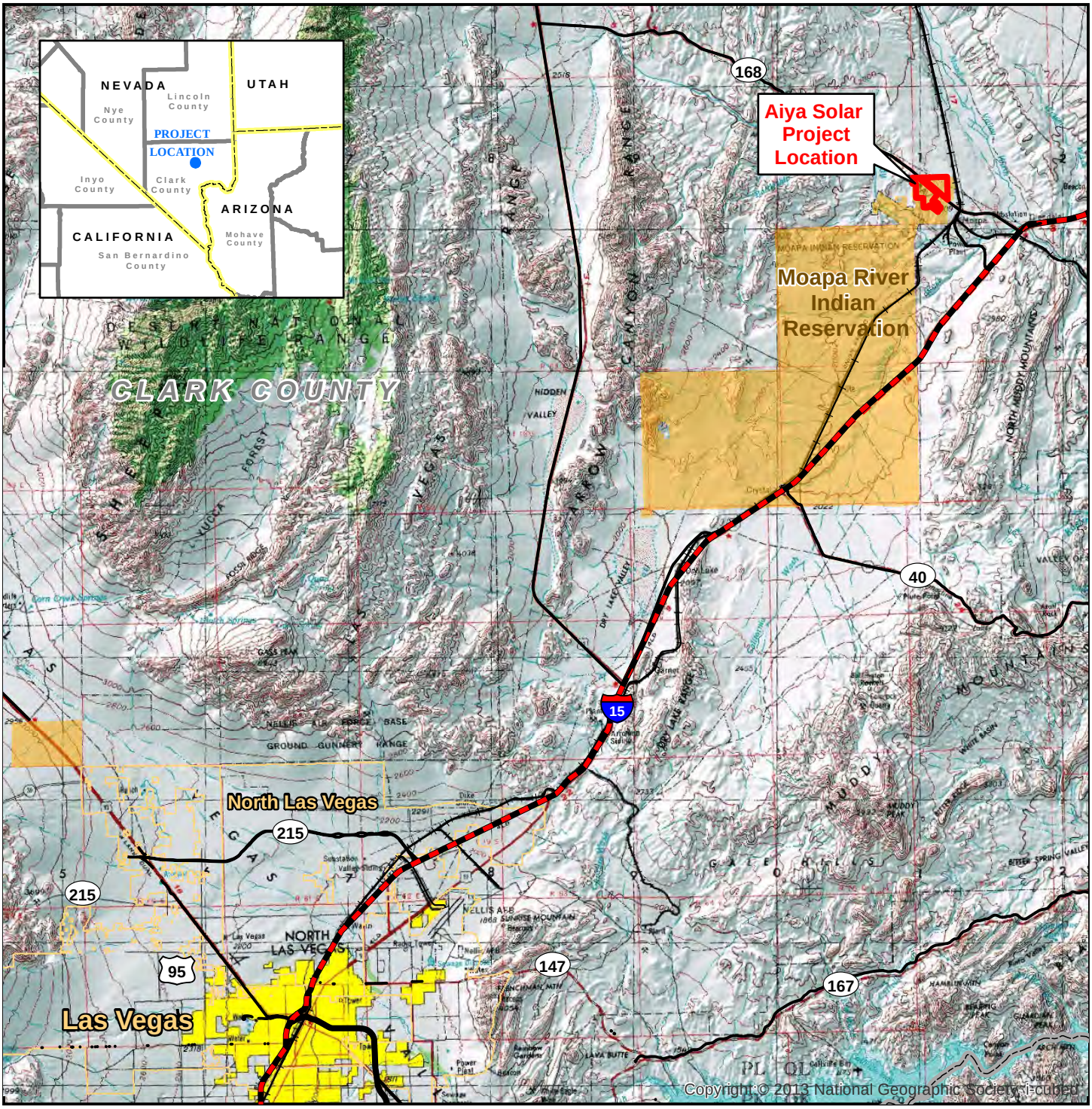

Legend

- Interstate
- US/ State Highway
- Railroad
- Solar Project Location
- Municipal Boundary
- Jurisdictional Land Ownership
- Indian Reservation

0 2 4 6 8 10

Miles

Universal Transverse Mercator
North American Datum 1983
Zone 11 North, Meters

Aiya Solar Project

FIGURE ES-1
PROJECT LOCATION

Map Extent: Clark County, Nevada

Date: 03-24-15		Author: rnc

G:\Aiya Solar Project/MXD's/Project Location 8.5x11 050715.mxd

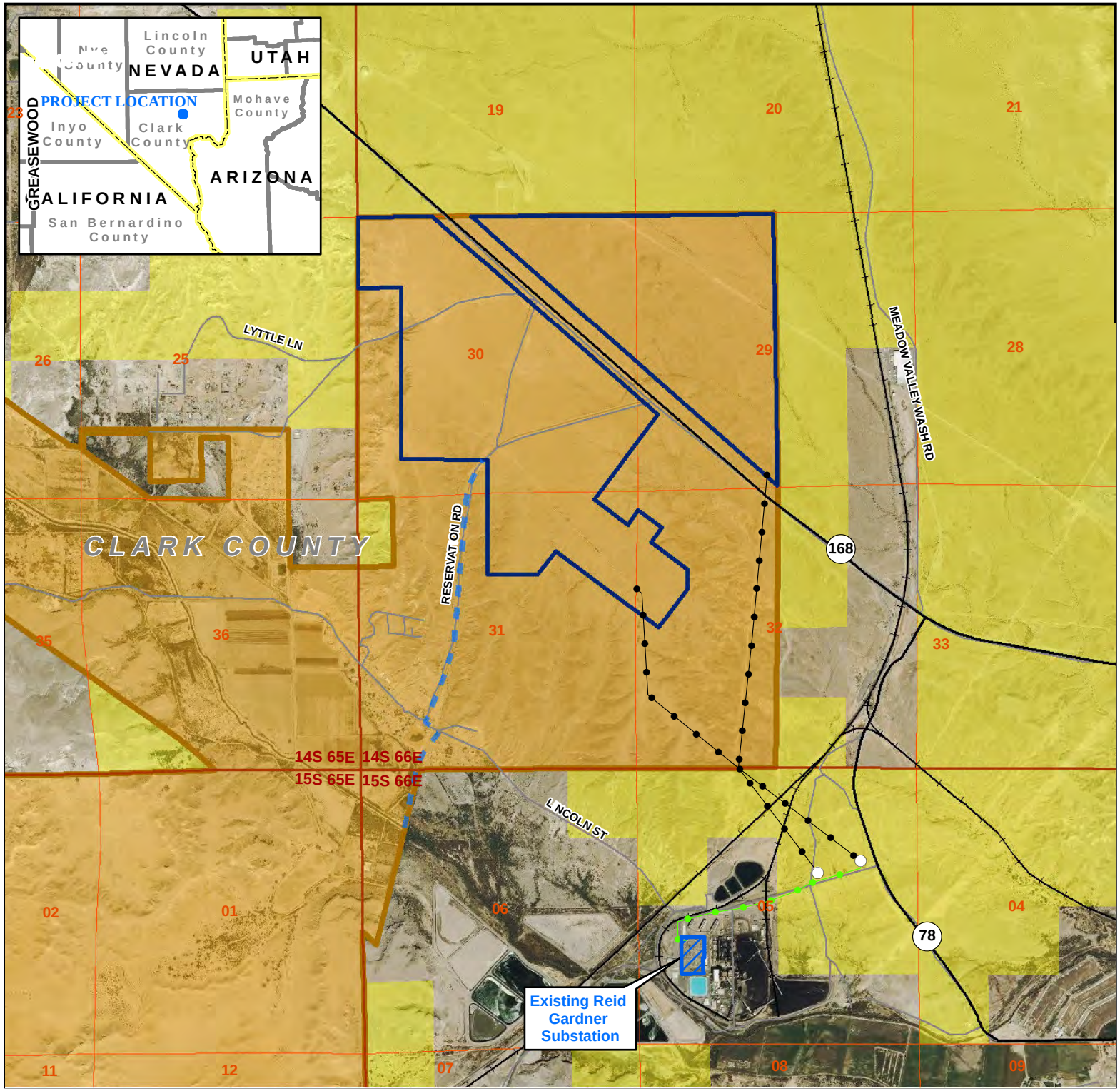

Legend

- Switch Station
- Gen-Tie Routes
- Double-Circuit Line
- Water Pipeline
- State Highway
- Road
- Railroad
- Project Area
- Existing Substation
- County Boundary
- Township / Range Boundary
- Section Boundary

Jurisdictional Land Ownership

- Bureau of Land Management Land
- Tribal Land

0 0.25 0.5 0.75 1

Miles

State Plane
North American Datum 1983
Nevada East, FIPS 2701, Feet

Aiya Solar Project

Figure ES-2
Project Area

Map Extent: Clark County, Nevada

Date: 05-07-15		Author: rnc

I:\Solar Projectt/MXD's/Project Area

Chapter 1

Purpose and Need

CHAPTER 1
PURPOSE AND NEED

This chapter describes the purpose of and need for the proposed Aiya Solar Project; discusses the laws, plans, policies, and programs that affect the Proposed Project and this Final Environmental Impact Statement (FEIS); and briefly describes the issues raised during scoping and that are addressed in this FEIS.

Aiya Solar Project, LLC (Aiya Solar or Applicant), a wholly owned subsidiary of First Solar, Inc., has entered into an agreement with the Moapa Band of Paiute Indians (Tribe) to lease land, up to 55 years on the Moapa River Indian Reservation (Reservation) for the purposes of operating and maintaining the Aiya Solar Project, a 100 megawatt (MW) solar generating facility using photovoltaic (PV) technology and associated infrastructure (the Proposed Project or Project). Prior to the up to 50-year operational period, the lease would provide up to four years for construction and after up to an additional year for decommissioning. **Figure 1-1** shows the Proposed Project location.

The Tribe is federally recognized and has a Constitution approved by the Secretary of the Interior on April 17, 1942. The current total land base of the Moapa River Indian Reservation is 71,954 acres and is held in trust by the U.S. government for the benefit of the Tribe. The Reservation lands originally set aside in 1874 consisted of two million acres, but in 1876, the Reservation was reduced to a thousand acres. In December 1980, Congress added approximately 70,000 acres to the Tribal land base. The stated purpose of the restoration of these Tribal lands was to provide economic development opportunities. A solar project on the Reservation provides a viable and best use economic opportunity for the Tribe.

The proposed solar generating facility would be constructed on a portion of 900 acres of tribal trust land within the Reservation. The Project infrastructure would include a 230 kilovolt (kV) electric transmission generation interconnection (gen-tie) line and a temporary water pipeline. The gen-tie line would include about 0.8 to 1.1 miles located on the Reservation, about 0.7 to 0.9 miles on Federal lands administered by Bureau of Land Management (BLM), and about 0.5 miles on private lands. The temporary water pipeline would be located entirely within the boundaries of the Reservation on tribal trust land. The water supply required for Proposed Project construction would be leased from the Tribe and drawn from the Tribe's existing surface water rights. It would be delivered to the proposed solar generating facility via the water pipeline. Access to the solar facility would be directly from State Highway 168 that crosses the solar site on the Reservation. **Figure 1-2** shows the Project area and the general location of the proposed Project. The Project is described in more detail in Chapter 2.

The Reservation was selected as the location of the Proposed Project due to its abundance of solar resource, the availability of suitable land, transmission accessibility, and absence of land use constraints (i.e., Desert Wildlife Management Areas [DWMAs], Areas of Critical Environmental Concern [ACECs], designated Wilderness Areas, Wilderness Study Areas [WSAs], Land with Wilderness Characteristics [LWC], and other restrictive land use designations).

The site of the Proposed Project was also selected to minimize environmental impacts, infrastructure needs, and costs by being located near existing infrastructure. In addition to contributing to the local economy by creating employment opportunities and generating lease income for the Tribe, the Proposed Project would encourage expenditures in local businesses.

1.1 Purpose and Need of the Proposed Project

The primary purpose and needs for the Proposed Project are to: 1) create an economic development opportunity for the Tribe by providing a long-term economically viable revenue source (lease income) and creating new jobs and employment opportunities for Tribal members; and 2) develop clean renewable electricity generation from the Tribe's solar resources that can be efficiently connected to the regional grid to assist the Federal Government, the State of Nevada, and neighboring states meet their renewable energy goals. The Proposed Project would also help meet the goals of the Federal Government to eliminate or reduce greenhouse gas (GHG) emissions and promote the deployment of renewable energy technologies.

The Tribe identified the Proposed Project as a viable opportunity to meet its economic development goals, because the lease would provide much needed revenue to the Tribe while occupying a small portion of the Reservation (1.5 percent) and construction and operation of the Project would afford employment opportunity to tribal members. The Proposed Project would also be consistent with the Tribe's tradition of respect for the land and would fulfill the purposes for which the 70,000 acres were restored to the Tribe by the Federal Government in 1980 (Moapa Paiutes, n.d.).The use of the Tribe's water by the Proposed Project would help the Tribe affirm and sustain its rights to the water.

Because the Proposed Project met their objectives, the Tribe forwarded their intent to enter into the lease agreement to the BIA to initiate the environmental review process for the proposed 100 MW Aiya Solar Project.

1.2 Agency Purpose and Need

1.2.1 Agency Purpose

The BIA purpose, pursuant to 25 United States Code (U.S.C.) §415, is to deny, grant, or grant with modifications the solar energy ground lease for the generation facility and associated right-of-way (ROW) agreements between the Tribe and Applicant for the water pipeline and the portions of the gen-tie line located on the Reservation.

The BLM decision to be made is to deny, grant, or grant with modifications the ROW grants under Title V of the Federal Land Policy and Management Act (FLPMA) (43 U.S.C. § 1761(a)) to construct, operate, maintain and decommission the portion of the proposed gen-tie line on BLM lands. The application for the gen-tie ROW is BLM ROW application N-093564. This ROW would be in compliance with FLPMA, BLM ROW regulations (43 Code of Federal Register [CFR] § 2800), and other applicable Federal and Nevada state laws and policies. The BLM will decide whether to deny the proposed ROW, grant the ROW, or grant the ROW with modifications. Modifications may include modifying the proposed use or changing the route or location of the proposed ROW (43 CFR § 2805.10(a)(1)).

The BIA and BLM decisions, if approved, would assist in addressing the management objectives in the Energy Policy Act of 2005 (Title II, Section 211) and Secretarial Order 3285A1 (March 11, 2009) that established the development of environmentally responsible renewable energy as a priority for the Department of the Interior.

Table 1-1 summarizes the agency actions for the Proposed Project.

Table 1 1
SUMMARY OF AGENCY DECISIONS TO BE MADE

Agency	Action
BIA	Approval of solar energy ground lease
	Approval of ROWs for portions of the 230 kV gen-tie line and the temporary water pipeline located solely on the Reservation
BLM	Approval of ROW for portions of the 230 kV gen-tie line located on Federal lands managed by the BLM
Tribe	Approval of solar lease and ROWs for portions of the 230 kV gen-tie line and water pipeline located solely on the Reservation

Because the BIA has a jurisdictional trust responsibility over Indian lands and the BLM has land management responsibilities under FLPMA, the Proposed Project is a major Federal action and must comply with the National Environmental Policy Act (NEPA) of 1969 (42

U.S.C. §§ 4321 *et seq.*). Because the majority of the Proposed Project would be located on tribal trust lands, the BIA is the lead federal agency. The Tribe, BLM, Environmental Protection Agency (EPA), and US Fish and Wildlife Service (USFWS) are cooperating agencies on the EIS for the Proposed Project. The BIA and BLM will use this EIS to make their respective decisions and the other cooperating parties will use this information to support their analyses and decisions, as needed.

1.2.2 Agency Need

The BIA must meet its responsibility to approve actions on tribal lands on lands held in trust for the benefit of the Tribe (as defined in 42 U.S.C. §§ 4321 *et seq*). For this Project, the BIA must review and respond to the solar ground lease and ROW agreements between the Tribe and the Applicant. The BLM must respond to Aiya Solar's application under Title V of FLPMA (43 U.S.C. § 1761) for a ROW grant for the gen-tie line in compliance with FLPMA. In accordance with Section 103(c) of FLPMA, public lands are to be managed for multiple uses that take into account the long-term needs of future generations for renewable and non-renewable resources. The Secretary of DOI is authorized to grant ROWs on public lands for systems of generation, transmission, and distribution of electrical energy (Section 501[a][4]).

1.3 Summary of Public Scoping and Issue Identification

1.3.1 Public Scoping Process

The BIA published a Notice of Intent (NOI) to prepare an EIS for the Proposed Project in the *Federal Register* on November 21, 2014. In addition, notices were placed in local newspapers and two public scoping meetings were held for the Proposed Project - one on the Reservation on January 14, 2015 and the other at the BLM offices located in Las Vegas, Nevada on January 15, 2015. The scoping report, found in **Appendix A**, summarizes the comments received and provides a preliminary list of issues and/or concerns identified.

The identified issues help determine the appropriate scope of environmental analysis to be addressed in this EIS that are within the scope of the decisions to be made by the BIA, BLM, and other cooperating agencies.

Table 1-2 below provides a summary of the key issues identified by interested agencies, stakeholders, and members of the public during scoping for the Proposed Project. These issues are the focus of the EIS analysis.

Table 1 2 KEY ISSUES IDENTIFIED DURING SCOPING	
ISSUE TOPIC	**ISSUE/COMMENT**
Water Resources	Evaluate the amount of water needed for the Project and all water sources available. Include analysis of water rights, water rights ownership, and potential water availability.
	Avoid / minimize impacts to desert washes to the extent possible.
	Evaluate whether septic system built for operations and maintenance (O&M) building would impact water sources for existing nearby homes.
Soils	Identify and assess soils impacts associated with construction of the berm along Reservation Road.
Vegetation	Consider transplanting cacti.
Cultural Resources	Cultural resource monitors should be used to minimize impacts.
	Determine whether Project would affect viewshed from the Old Spanish National Historic Trail.
	Evaluate whether the path/trail on site has cultural significance.
Land / Resource Use	Need to evaluate the potential impact of development of the Project and associated linear facilities on other existing and planned transmission and pipeline facilities in the area.
	Evaluate whether the Proposed Project could interfere with planned housing sites on the Reservation. Concern with the project's proximity to existing housing.
Socioeconomics	Need to confirm Indian/Tribal preference employment and potential employment opportunities for tribal members.
	Concern about whether power purchase agreement would be in place to determine where the power would be going.
Wildlife	Need to evaluate whether there could be potential gaps in tortoise fencing and potential impacts to Moapa dace.
	Evaluate impacts to birds from the project transmission line.
	Evaluate whether PV field could be visually similar to a lake to birds and how it could affect them.
Visual Resources	Utilize appropriate lighting, building materials, colors and site placement that are compatible with the natural environment. Consider visual mitigation using vegetation along Reservation Road and SR 168.
	Determine whether Project would affect viewshed from the Old Spanish National Historic Trail.
Air Quality	Appropriate mitigation needs to be applied to control fugitive dust during construction.
Climate Change	Evaluate potential effects of climate change to water, air, wildlife, and carbon sequestration.

Table 1 2 KEY ISSUES IDENTIFIED DURING SCOPING	
ISSUE TOPIC	**ISSUE/COMMENT**
Cumulative Impacts	Consider the cumulative impacts to tortoises and visual resources from both temporary and permanent development activities.
	Consider cumulative impacts from other solar projects in the area including those in the BLM Solar Energy Zone (SEZ).

1.3.2 Comments on the Draft EIS

The BIA published a Notice of Availability (NOA) announcing the publication of the DEIS for the Proposed Project in the *Federal Register* on May 15, 2015. In addition, notices were placed in local newspapers and two public meetings were held to receive comments on the DEIS for the Proposed Project - one on the Reservation on June 17, 2015 and the other at the BLM offices located in Las Vegas, Nevada on June 18, 2015. **Appendix N** outlines the comments received on the DEIS and provides a table summarizing responses to the comments and how they were addressed in this FEIS.

1.4 Policies and Programs

1.4.1 Relationship to Federal Policies, Plans, and Programs

The Proposed Project will conform to the laws, regulations or policies shown in **Table 1-3**. Additional details and summation of Federal, Tribal, state, and local policies, plans, and laws that may apply to the Proposed Project are found in **Appendix B**. It should be noted that portions of the Proposed Project that lie wholly within the Reservation would be regulated under the Tribe's Environmental Policy Ordinance, in accordance with NEPA, and in compliance with other Federal regulations that apply on Tribal lands (State, County, and local laws and policies are not applicable to Tribal lands). Furthermore, the transmission line on BLM-administered land may be regulated under county, state, and Federal regulations that apply to the BLM.

Table 1 3 ENVIRONMENTAL LAWS, REGULATIONS, AND POLICIES	
LAWS, REGULATIONS, and POLICIES	**SOURCE**
GENERAL	
National Environmental Policy Act (NEPA)	42 U.S.C. §§ 4321 et seq.
Administrative Procedures Act	5 U.S.C. §§ 701-706
Moapa Band of Paiutes Tribal Environmental Policy Ordinance	Tribal Document 12708\2\1398527.3

Table 1 3 ENVIRONMENTAL LAWS, REGULATIONS, AND POLICIES	
LAWS, REGULATIONS, and POLICIES	**SOURCE**
Bureau of Indian Affairs (BIA) NEPA Guidebook	59 Indian Affairs Manual (IAM 3-H) (2012, updated 2013)
Bureau of Land Management(BLM) NEPA Handbook	BLM Manual H-1790-1
NEPA, Protection and Enhancement of Environmental Quality	Executive Order 11514
Department of Energy Organization Act	42 U.S.C. § 7131
Consultation and Coordination with Indian Tribal Governments	Executive Order 13175
Authority for BIA to approve business leases on Tribal trust lands implementing regulations	25 U.S.C. § 415 25 CFR § 162
AIR QUALITY AND CLIMATE	
Clean Air Act (CAA)	42 U.S.C. §§ 7401 et seq.
NEPA Guidance on Consideration of the Effects of Climate Change and Greenhouse Gas Emissions	Council on Environmental Quality (CEQ), February 18, 2010
Air pollution control program: Clark County Department of Air Quality and Environmental Management	Nevada Revised Statute (NRS) 445B.500
SOILS	
Farmland Protection Policy Act	7 U.S.C. §§ 4201, et seq.
WATER RESOURCES	
Clean Water Act (CWA) Sections 401, 402 and 404	33 U.S.C. §§ 1251 et seq.
Safe Drinking Water Act	42 U.S.C. §§ 300f et seq.
Nevada State Surface Water Quality	Nevada Administrative Code 445A.118-225
Floodplain Management	Executive Order 11988
Protection of Wetlands	Executive Order 11990
CULTURAL AND HISTORICAL	
National Historic Preservation Act	16 U.S.C. 470 et seq.; Executive Order 11593
Archaeological Resources Protection Act	16 U.S.C. §§ 470aa-470ll
Archaeological and Historic Preservation Act	16 U.S.C. §§ 469 et seq.
American Indian Religious Freedom Act	42 U.S.C. §§ 1996 et seq.
Indian Sacred Sites	Executive Order 13007
Native American Graves Protection and Repatriation Act	25 U.S.C. § 3001
Antiquities Act	16 U.S.C. §§ 431 et seq.
National Trails System Act (NTSA)	Pub.L.No.90-543, as amended through Pub.L.No.111-11
Paleontological Resources Preservation Act	Subtitle D of the Omnibus Public Land Management Act of 2009, Pub. L. 111-011
BIOLOGICAL RESOURCES	
Endangered Species Act	16 U.S.C. §§ 1531-1543
Fish and Wildlife Conservation Act	16 U.S.C. § 2901
Fish and Wildlife Coordination Act	16 U.S.C. § 661, 48 Stat. 401 as amended
Migratory Bird Treaty Act	16 U.S.C. §§ 703 et seq.
Bald and Golden Eagle Protection Act of 1940, as amended	16 U.S.C. § 668
Public Lands - Wild Horses and Burros	Pub.L.No.92-195, 85 Stat. 649
Invasive Plants and Noxious Weeds	Executive Order 13112

Table 1 3 ENVIRONMENTAL LAWS, REGULATIONS, AND POLICIES	
LAWS, REGULATIONS, and POLICIES	**SOURCE**
Nevada State Protected Species	Nevada Revised Statute 527.060–527.120
LAND USE LAWS	
Title V Federal Land Public Management Act	43 U.S.C. § 1761 (a)
Enforcement of State Wildlife Resources	Nevada Revised Statute 501
Clark County Comprehensive Plan	Clark County's Utilities Policy UT 1-6
Las Vegas Resource Management Plan	BLM Document: BLM/LV/LP-99/002+1610 and 43CFR 2800
43 Code of Federal Regulations, Part 2800	Rights –of-ways under FLMPA
Federal Aviation Administration	14 CFR Part 77
NOISE	
Noise Control Act	42 U.S.C. §§ 4901-4918
Clark County Noise Ordinance	Sec 30.68.020 (h) & (e)
SOCIAL/ECONOMIC	
Environmental Justice	Executive Order 12898
Limited English Proficiency	Executive Order 13166
MANAGEMENT AREA	
National Wildlife Refuge System Administration Act	16 U.S.C. § 668dd
HUMAN HEALTH AND HAZARDOUS MATERIALS	
Hazardous Waste and Solid Waste Amendments Act	42 U.S.C. 6901
Federal Compliance with Pollution Control Standards	Executive Order 12088
Superfund Implementation	Executive Order 12580
Occupational Safety and Health Act	29 U.S.C. §§ 657 et seq.
Comprehensive Environmental Response, Compensation and Liability Act	42 U.S.C. §§ 9601 et seq.
Federal Insecticide, Fungicide, and Rodenticide Act	7 U.S.C. § 136
Toxic Substances Control Act	15 U.S.C. §§ 2601 et seq.
Pollution Prevention (Right to Know)	Executive Order 12856
Clark County Fire Department	Ord. 2762 (part), 2002; Ord.1881 (part), 1996

1.5 Permits and Approvals Required for the Proposed Project

Table 1-4 lists the anticipated additional local, Tribal, state, Federal and private permits or approvals that may be required for the Proposed Project beyond the BIA and BLM decisions and NEPA process discussed earlier. This table has been subdivided by the various components of the Project and land jurisdiction – Tribal and Federal land administered by the BLM.

1.6 Document Organization

The following outlines the organization of the remainder of this document:

Volume 1

- Chapter 2 – Alternatives
- Chapter 3 – Affected Environment
- Chapter 4 – Environmental Consequences
- Chapter 5 – Mitigation
- Chapter 6 – Consultation and Coordination
- Chapter 7 – List of Preparers and Reviewers
- Chapter 8 – References

Volume 2

- Appendices

Table 1 4 ANTICIPATED PERMITS FOR THE PROPOSED PROJECT		
Land Ownership	**Project Components**	
	Aiya Solar Project/Water Line	**Transmission Lines**
Moapa River Indian Reservation	NPDES 402 Construction Stormwater Permit (EPA)	NPDES 402 Construction Stormwater Permit (EPA)
	Section 7 Consultation (USFWS)	Section 7 Consultation (USFWS)
	Section 106 Consultation (SHPO)	Section 106 Consultation (SHPO)
	Compliance with Tribal Environmental Policy Ordinance	Compliance with Tribal Environmental Policy Ordinance
	OccupancyPermit[1] (NDOT)	Occupancy Permit[1] (NDOT)
BLM	N/A	Section 404 Permit (USACE)
	N/A	Plan of Development (BLM)
	N/A	Section 7 Consultation (USFWS)
	N/A	NPDES 402 Construction Stormwater Permit
	N/A	401 Water Quality Certification (NDEP)
	N/A	Section 106 Consultation (SHPO)
	N/A	Clark County Dust Control Permit
	N/A	Clark County Special Use Permit
	N/A	Utility Environmental Protection Act (UEPA) Permit (PUCN))
	N/A	Encroachment / Crossing Permit with Railroad
	N/A	Special Purpose Permit (NDOW)
		Working in Waters Permit (NDEP)
		Groundwater Discharge Permit (NDEP)
NV Energy - Reid-Gardner or Collector Substation	N/A	Interconnection Agreement, Easement

[1] Occupancy permit would be required for project activities/facilities with the Highway 168 ROW.

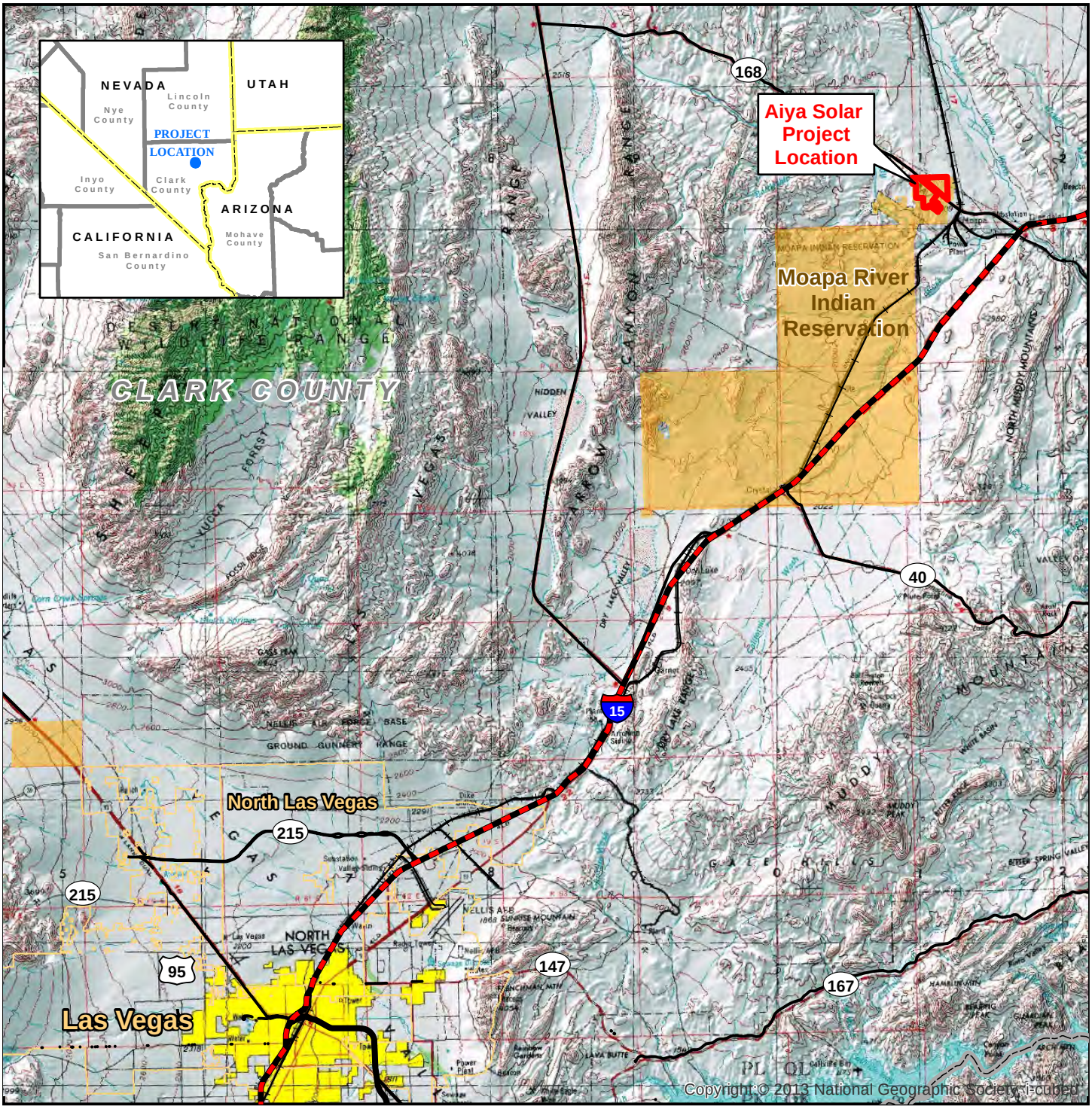

Legend

- Interstate
- US/ State Highway
- Railroad
- Solar Project Location
- Municipal Boundary
- Jurisdictional Land Ownership
- Indian Reservation

0 2 4 6 8 10

Miles

Universal Transverse Mercator
North American Datum 1983
Zone 11 North, Meters

Aiya Solar Project

FIGURE 1-1
PROJECT LOCATION

Map Extent: Clark County, Nevada

Date: 03-24-15		Author: rnc

G:\Aiya Solar Project/MXD's/Project Location 8.5x11 032415.mxd

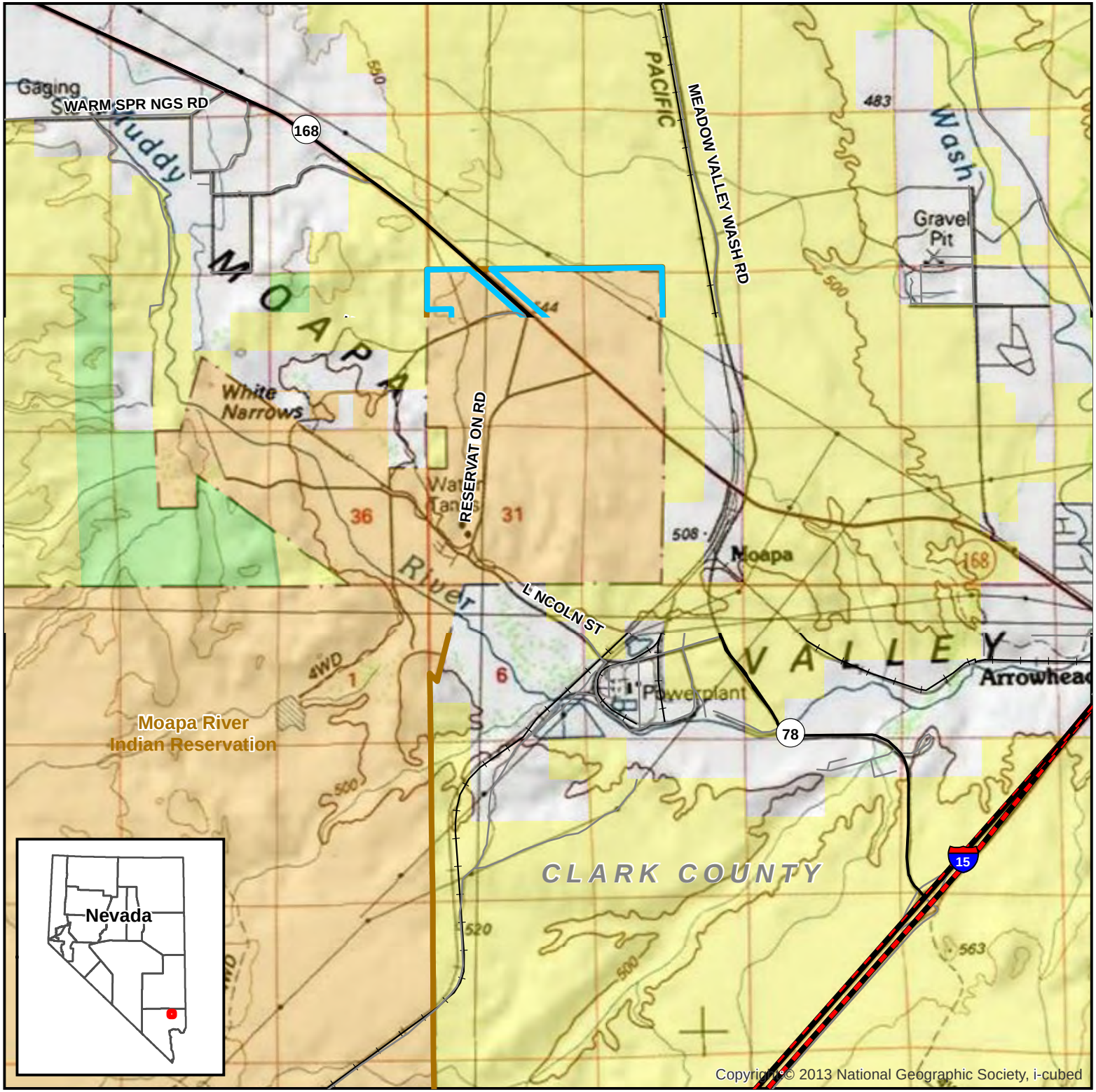

Legend

- State Highway
- Road
- Railroad
- Project Area

Jurisdictional Land Ownership

- Bureau of Land Management Land
- Indian Reservation
- Bureau of Reclamation

0 2,000 4,000 6,000
Feet

0 0.5 1 1.5
Miles

State Plane Coordinate System
Nevada East, NAD 83
Lambert Conformal Conic Projection
1983 North American Datum
Linear Unit: Foot US

AIYA SOLAR PROJECT

Figure 1-2
Project Area

Map Extent: Clark County, Nevada

Date: 03-24-15 | Author: rnc

...Maps\Project Area.mxd

Chapter 2

Proposed Action and Alternatives

CHAPTER 2
PROPOSED ACTION AND ALTERNATIVES

2.1 Introduction

This chapter provides a detailed description of the proposed Aiya Solar Project. It describes the various components of the Project and includes discussions of the proposed construction process, operations and maintenance procedures, and decommissioning.

This chapter describes the Proposed Action, the No Action Alternative, additional action alternatives, and several alternatives considered by the Applicant, the Tribe, the BIA, and Cooperating Agencies but eliminated from further analysis and consideration. The rationale for dismissing other alternatives to the Proposed Project is also discussed.

2.2 Description of Proposed Project

2.2.1 Project Overview

The Applicant proposes to construct, operate, maintain, and decommission the Project, consisting of up to a 100 MW solar PV power generating facility on the Moapa River Indian Reservation in Clark County, Nevada. Project components include onsite facilities, offsite facilities, and temporary facilities needed to construct the Project.

The solar site is located entirely on the Reservation. Major onsite facilities are the solar field (comprised of multiple approximately 4 MW blocks of solar photovoltaic (PV) panels mounted on fixed tilt or tracking systems and associated equipment), a project substation, and operation and maintenance (O&M) facilities. The offsite facilities include an approximately two-mile single-circuit 230 kV gen-tie located on the Reservation and BLM-administered lands, and an approximately 0.8-mile double-circuit 230 kV gen-tie located on BLM-administered lands and private lands. These lines would require a right-of-way (ROW) width of 150 feet. Additional offsite facilities include short access roads to connect the Project to the nearby existing road infrastructure; a temporary intake in the Muddy River and corresponding water delivery pipeline, and electric distribution and communication lines, all of which would be located on the Reservation. Temporary facilities, which would be removed at the end of the construction period, include the offsite water intake and pipeline mentioned above and the onsite mobilization, laydown, and construction areas and water storage tanks that would also be located on the Reservation. **Table 2-1** summarizes the components of the Project and the associated agency actions.

Power produced by the Project would be conveyed to the bulk transmission system via the gen-tie, which would interconnect to NV Energy's existing 230kV Reid-Gardner Substation. Once additional planned generation in the area comes online, NV Energy may build a proposed switchyard near the existing Reid-Gardner Substation and, if so, the gen-tie would connect to it also. The exact site of the switchyard and construction timing will be determined by NV Energy. Until such time, the single-circuit gen-tie would connect to a switch structure located north of the future NV Energy switchyard and would continue as a double-circuit transmission line to NV Energy's existing Reid Gardner Substation.

Table 2 1
SUMMARY OF AGENCY LANDS / JURISDICTION
PROPOSED AIYA SOLAR PROJECT

Agency	Project Component	Location	Agency Action	Acreage/ Mileage *
BIA	Solar Field	Reservation	Lease	Up to 900 acres
	Temporary Water Pipeline	Reservation	ROW	2.0 miles / 5 acres
	230 kV Line	Reservation	ROW	1.1 miles / 20 acres
	Access Roads	Reservation	ROW	400 feet / 1 acre
	TOTAL BIA			926 acres
BLM	230 kV Line	Federal Lands managed by BLM	ROW	0.9 miles / 17 acres

* Acreage and mileage is approximate. Gen-tie acreage is based on a 150-foot ROW. Only a portion of the 900-acre potential solar lease area would be disturbed by the final footprint of the solar project.

In addition to the Federal agency jurisdictions mentioned above, an approximate 0.5-mile portion of the double-circuit gen-tie crossing private lands (owned by NV Energy) would be subject to Clark County jurisdiction and would require a Special Use Permit (SUP).

2.2.2 Project Location and Setting

The Proposed Project would be located approximately 40 miles northeast of Las Vegas in Clark County, Nevada (**Figure 1-1**). The solar project would be located on up to 900 leased acres within the Reservation in Mount Diablo Meridian, Township 14 South, Range 66 East, Sections 29, 30, 31,and 32. These lands are currently vacant except for roads, pipelines, and transmission line ROWs.

The gen-tie line would be located on Reservation lands, Federal lands managed by the BLM south of the solar site within Section 5 of Township 15 South and Range 66 East, and private lands (owned by NV Energy) adjacent to the Reid-Gardner Substation. The temporary water pipeline associated with the Project would be located on the Reservation south of the solar site in Sections 30 and 31 in Township 14 South, Range 66 East and Section 6 of Township 15

South and Range 66 East. **Figure 2-1** shows the location of the components of the Proposed Project and associated facilities.

2.2.3 Key Project Elements

The Project would include the following key elements, the locations of which are shown in **Figure 2-2**, *Preliminary Site Plan*:

1. Onsite facilities - facilities proposed within the 900-acre solar lease boundary consisting of:
    a. Solar Array blocks consisting of solar PV modules mounted on fixed-tilt mounting systems and/or single-axis, horizontal tracker mounting systems supported by driven steel posts or other embedded foundation design (a typical panel array layout using fixed-tilt panels is shown in **Figure 2-3**, *Typical Array Configurations,* and **Figure 2-4**, *Typical Mounting System*);
    b. Meteorological monitoring stations within the solar field, and if tracker technology is utilized, up to 10 meteorological towers (steel lattice), approximately 30 feet high, mounted on concrete foundations would be installed around the perimeter of the solar field;
    c. Interior access ways and a perimeter road;
    d. Direct current (DC) collection system and Power Conversion Stations (PCSs) to collect power from the array blocks;
    e. Overhead and underground 34.5 kV alternating current (AC) collection system to convey electricity from the PCSs to the onsite substation;
    f. Fully fenced substation with one or more 34.5 kV to 230 kV step-up transformers, breakers, buswork (connections), protective relaying and associated substation equipment, microwave tower, and a mechanical electrical equipment room;
    g. Approximately 10-acre O&M area that would accommodate an O&M building, parking area, and other associated facilities such as above ground water storage tanks, septic system, security gate, signage, lighting and flagpoles (water supply for the O&M area would be provided via a tap into an existing water pipeline that crosses the solar site);
    h. Project security using a combination of perimeter security fencing, controlled access gates, on-site security patrols, lighting, electronic security systems and/or remote monitoring;
    i. A 10-foot-wide firebreak adjacent to the perimeter fence (if needed);
    j. Desert tortoise exclusion fencing around the Project perimeter;
    k. Drainage control structures, final design to be determined upon completion of a hydrologic study; and
    l. An earthen berm with landscaping along and outside the ROW for Reservation Road to provide visual screening.
    (Note that these facilities would impact only a portion of the 900-acre lease area as shown in **Figure 2-2**)

2. Offsite facilities outside the solar lease boundary consisting of:
   a. Two short (approximately 200-foot long) primary access roads - one that would connect the southern portion of the solar site to State Highway 168 and one connecting the northern portion of the solar site to State Highway 168.
   b. Two short (also approximately 200 feet long) secondary access roads intended primarily for emergency access. One secondary access road would connect Highway 168 to the northern Project site, similar to the primary access road for this area, but the emergency entrance would be located further west along Highway 168. The secondary access road for the array south of Highway 168 would be located along the easternmost boundary of the southern array with its entrance located along Highway 168.
   c. An approximately 2.0 mile single-circuit 230kV gen-tie line that connects to a new switch structure north of a future NV Energy switchyard (site to be determined by NV Energy in the future if growth warrants the addition) and an approximate 0.7 mile double-circuit 230kV gen-tie from the switch structure to NV Energy's 230kV Reid-Gardner Substation. These lines would require a 150-foot wide ROW. If NV Energy builds the new switchyard in the future, the gen-ties would both connect from the switch structure into the switchyard. The gen-tie line would be located on Reservation, BLM-administered, and private lands owned by NV Energy.
   d. Fiber optic communications cable installed underground or overhead along all or part of the gen-tie route defined above. In addition, cable may be installed on the project site along Highway 168 and along Reservation Road outside the road ROW and on the Reservation; and
   e. Approximately 1,000-foot distribution power line from the nearby existing Overton Power distribution system on the Reservation (to support construction and Project operations and management activities).
3. Temporary facilities to be removed at the end of the construction period consisting of:
   a. A metered intake in the Moapa River and an approximately two-mile above-ground water pipeline paralleling Reservation Road outside the road ROW to the temporary onsite tanks. The intake and pipeline right of way would be on Reservation land;
   b. An approximately 10-acre temporary construction mobilization and laydown area located south of Highway 168 on the Project site;
   c. An additional temporary construction area for construction offices and parking would be located north of Highway 168 to serve the northern portion of the Project site;
   d. Temporary construction areas would be located at each gen-tie line tower location and at locations required for conductor stringing, splicing, and pulling operations;
   e. One or more temporary tanks for construction water located on the Project site on the Reservation; and
   f. Temporary generators may be used to provide construction power on the solar site.

The total acreage of temporary and permanent disturbance associated with the Project facilities is summarized in **Table 2-2**.

Table 2 2 TEMPORARY AND PERMANENT DISTURBANCE		
Project Component	**Temporary Disturbance (acres)**	**Permanent Disturbance (acres)**
Solar Field and Ancillary Facilities (Includes all facilities described in 2.2.4 below)	50	575
Access Roads - proposed primary, alternate primary, and proposed secondary (As described in 2.2.5.2 below)	1	1
230 kV Gen-Tie Line (as Described in 2.2.5.1 below)	25	15
Water Intake and Pipeline (max) (as described in 2.2.5.5 below)	5	0
Total	81	591

2.2.4 Onsite Project Facilities

Onsite facilities would include PV modules configured in blocks as described in Section 2.2.4.1, the onsite collection system described in Section 2.2.4.2, site security and fencing described in Section 2.2.4.3, the O&M facility described in Section 2.2.4.4, and internal Project-related roads described in Section 2.2.4.5. Other Project features, processes, systems, and equipment are described in Sections 2.2.4.6 through 2.2.4.11.

All Project components would be designed in accordance with Federal and industrial standards that would be applicable to these types of facilities including American Society of Mechanical Engineers, National Electrical Code, International Energy Conservation Code, International Building Code, Uniform Plumbing Code, Uniform Mechanical Code, National Fire Protection Association, and Occupational Safety and Health Administration (OSHA).

2.2.4.1 Solar Field

The solar field will include mounted PV modules, inverters, and transformers that would be combined to form blocks approximately 4 MW in size (block size may change based on final design). The blocks would be repeated to create up to 100 MW of AC electrical capacity at the point of interconnection (POI). Meteorological monitoring stations will also be located within the solar field.

The Project would be constructed using PV modules mounted on fixed-tilt mounting systems and/or single-axis, horizontal tracker mounting systems. These mounting systems are described below. The final decision on mounting technology would be made in consultation with the customer for the power.

Fixed Tilt Mounting System

If a fixed-tilt mounting system is used, panel arrays would be constructed in east-west oriented rows. The fixed-tilt panels would be positioned to receive optimal solar energy at an angle of 20 to 25 degrees, and would not move. A typical panel array layout using fixed-tilt panels is shown in **Figure 2-3**. The vertical height of fixed-tilt panel arrays would be between 4 feet high and 10 feet high. If 10 feet high, then the arrays would be up to 13 feet above the ground surface at the highest point (**Figure 2-4**). The height of the panel array would vary depending on the panels used and on the site conditions, since the solar field would not be graded to a level surface. The mounting system for the fixed-tilt module includes steel posts driven into the ground (or other embedded foundation design), with steel table frames bolted to the driven posts. The modules then would be then mechanically fastened to the steel table frame.

Horizontal Tracker Mounting System

If a horizontal tracker mounting system is used, the panel arrays would be arranged in north-south oriented rows and drive motors would rotate the horizontally mounted solar panels from east to west to follow the sun (on a single axis) throughout the day. A typical panel array layout using horizontal trackers is shown in **Figure 2-3**. The highest point for a horizontal tracker would be achieved during the morning and evening hours when the trackers are tilted at their maximum angle, and would be a maximum of 13 feet above the ground surface depending on the grade where the posts are installed (**Figure 2-4**). When solar modules are roughly parallel to the ground, the overall height of the tracker unit would be a maximum of 10 feet above the ground surface depending on the grade where the posts are installed.

The vertical support legs for the tracker mounting system consists of foundations that may include concrete piers approximately 18 to 24 inches in diameter and 4 to 6 feet deep, or posts approximately 6 to 8 inches across and driven to a depth of 4 to 6 feet. The preferred mounting configuration would use directly embedded driven posts; concrete piers would be used only if subsurface conditions do not support driven posts.

In this type of system (tracking), each tracker panel array is approximately 65 feet long and powered by a low-voltage electric drive motor. The motors and actuator may be mounted to one of the driven posts and would not require separate foundations for mounting. Alternatively, a drive motor may move multiple rows of solar panels through a drive strut mechanism that links a series of tracker rows together. The motors only would be operated for a few seconds every 5 to 10 minutes during daylight conditions to move the panels in approximately 1 degree increments.

If horizontal trackers are used, meteorological monitoring towers located at multiple locations (up to 10) around the perimeter of the solar array would monitor wind speed and communicate with the tracker units. This would allow for the trackers to rotate to a flat position during high wind activity. Meteorological towers would be monopole or lattice design and would not exceed 30 feet in height. Each tower would require a small concrete foundation approximately 3 feet by 3 feet that would extend approximately 4 feet into the ground, depending on soil conditions.

Emergency Backup Power

If horizontal trackers are used, the PCSs would be equipped with emergency backup power required to rotate the tracker units to their stow position in the unlikely event of high winds and a loss of the primary 230 kV electrical connection from the Project to NV Energy's transmission system. The emergency back-up power system would consist of a 15 kilovolt-ampere (kVA) battery-based uninterruptible power supply (UPS) at each PCS. Batteries would be lead acid based and/or lithium ion. Sufficient cooling capacity to maintain ambient temperatures appropriate for the selected battery would be provided. Periodic replacement of the UPS batteries is expected as often as every 5 years based on usage and quarterly inspections, though it is not uncommon for the batteries to last longer than 10 years. Inspections of the batteries would be performed as part of the preventative maintenance program.

2.2.4.2 Onsite Electrical Collection System and Substation

PV modules convert sunlight into DC electricity. One or more combiner boxes would be located in the array block to collect the DC electricity generated from the PV modules. The electricity would be delivered through underground cables to an inverter that converts the DC electricity to AC electricity and a medium-voltage transformer that steps up the voltage to 34.5 kV. This converted AC electricity then would be delivered to the onsite substation via the 34.5 kV AC collection system, where the electricity again would be stepped up to 230 kV for delivery to NV Energy's transmission grid.

Inverters, Transformers, and Medium Voltage Switchgear

Each array block would have a PCS containing inverters and medium voltage transformers, as well as other electrical equipment. Each PCS also would contain communication equipment to wirelessly communicate with the tracker units to control operation and detect anomalous conditions. Photovoltaic Combining Switchgear (PVCS) will be located along the 34.5 kV collector line. All electrical equipment would be housed in their respective protective enclosures on concrete pads.

Inverter, transformer, and PVCS specifics are provided below (these may vary pending final Project design):

- Inverters
    - Approximate dimensions: 5 feet wide by 19 feet long by 8 feet high. The inverter cabinet may be placed over a precast vault that fits into the ground, with a skid on top of the vault and below the inverter. The vault and skid would be up to 40 feet long (approximately 20 feet longer than the inverters).
    - Capacity: 500 –4,000 kilowatts (kW)

- Transformers
    - Approximate dimensions: 8 feet wide by 10 feet long by 8 feet high. Depending on the transformer selected during final Project design, the transformer could have its own skid and vault.
    - Capacity: 1,000 – 4,200 kVA
    - Oil: Each transformer contains approximately 300-1,000 gallons of dielectric oil
- PVCS
    - Metal enclosed or gas-insulated 34.5 kV switchgear

34.5 kV Collection System

The 34.5 kV collection system would include both underground and above ground cabling. From the medium-voltage transformers to the PVCSs, the 34.5 kV system would be installed underground using 35 kV-rated medium voltage cables listed for direct buried applications. An exception would be that overhead cabling would be installed where necessary to avoid existing underground facilities. Underground 34.5 kV cables would be installed to comply with the minimum burial depth in accordance with the National Electrical Code.

From the PVCSs to the onsite substation, the 34.5 kV collector system would be installed overhead. Overhead 34.5 kV collector lines would be installed as double circuit lines on wood poles with post insulators (typical of medium voltage installations in electric distribution systems). Pole height would be up to 75 feet above grade and spacing between individual circuits and phases would comply with National Electrical Safety Code requirements. Wood poles would be installed with approximately 150-foot spacing between poles. Wood poles typically would be directly embedded to 10 percent of the pole height plus two feet. An approximately 2-inch diameter ground rod may be hammered into the ground adjacent to the wood pole.

Onsite Substation

The approximately 90,000 square-foot (2-acre) onsite substation would be located in the eastern portion of the Project site and constructed to applicable electrical safety codes. The substation would be separately fenced to provide increased security around the medium and high voltage electrical equipment. The onsite substation area would include a transformer containment area, a microwave tower, a control house, and one or more transformers.

The transformer containment area would be either a pit design or lined with an impermeable membrane covered with gravel, and would include a drain with a normally closed drain valve. Any storm water or fluid in the containment area would be inspected after significant storm events for a sheen prior to disposal. If a sheen is observed, the contents would be removed by vacuum truck and transported to an appropriate disposal site. If no sheen or contaminants are detected, the storm water would be drained on-site. The containment system would be designed to accommodate the volume of the dielectric fluid in the transformer plus an allowance for precipitation from major storm events.

2.2.4.3 Site Security and Fencing

Security at the Project site would be achieved by fencing, lighting, security patrols, and/or electronic security systems. The Project site would be monitored 24 hours per day, seven days per week during all phases. Lighting would be provided at the O&M building and Project entrance gate.

The solar field and support facilities perimeter would be secured with chain link metal-fabric security fencing. Controlled access gates would be located at the site entrance. Access gates also would be located at specific locations along the perimeter road to allow maintenance and security crew access to all portions of the Project site.

The perimeter fence would be an approximately 6 to 7-foot-high chain link fence with 1-foot-high barbed-wire security strands at the top. A 10-foot-wide fire break would be maintained adjacent to the exterior of the array if needed.

Fencing also would be installed around the onsite substation. Access gates would be provided to allow maintenance vehicle access to the equipment. Substation fencing would be similar in design to the perimeter fence.

Approved desert tortoise exclusion fencing to prevent tortoises from entering the solar field would be installed on the outside of the perimeter security fence. The tortoise fence would extend an additional one foot below the ground. Below ground tortoise fencing would be angled outward, away from the solar collector field, to discourage burrowing tortoises.

2.2.4.4 Operation and Maintenance Facilities

An approximately 10-acre O&M area would be located in the northeastern portion of the Project site, adjacent to the temporary construction mobilization and laydown area. The O&M area would accommodate a permanent O&M building, parking area, and other associated facilities such as above ground water storage tanks, septic system, security gate, signage, and flagpoles. The permanent O&M building would house administrative, operation, and maintenance equipment and personnel, and would be up to 2,000 square feet in size. It would have a maximum height of approximately 15 feet and would have an adjacent parking area. The O&M building would include communication equipment, storage and equipment area, offices, restrooms, and other necessary features. The design and construction of this building would be consistent with Clark County building standards and approved by the Tribe and BIA.

Additional components of the O&M area would include a temporary construction laydown and storage area and trash containers. The O&M area would be equipped with exterior lighting as described in a Lighting Management Plan to be prepared by the Applicant and approved by the Tribe and BIA.

A separate, uninhabited communications enclosure would be located adjacent to the onsite substation. The communications enclosure would be constructed of either metal or pre-cast concrete and would house the site communications and metering equipment.

During operations, water for the O&M building would be provided through a metered connection to the local water utility.

Supervisory Control and Data Acquisition System

The Project would have a Supervisory Control and Data Acquisition (SCADA) system that would allow for the remote monitoring and control of inverters and other Project components. The SCADA system would be able to monitor Project output and availability, and to run diagnostics on the equipment. This equipment would be located in the O&M building.

The SCADA system would provide control, monitoring, alarm, and data storage functions for the power plant systems. Redundant capability would be provided for critical SCADA components such that no single component failure would cause a plant outage. The SCADA system would be linked to the inverters, met stations and relays via fiber optic and copper communications cable. These data links would provide control, monitoring, alarm, and data storage functions via the control operator interface and SCADA control technician workstation.

Cathodic Protection Systems

While not expected, underground metal structures may have cathodic protection as necessary. Cathodic protection is a technique used to control the corrosion of metal surfaces. The only underground metal structures would be the driven support posts for the PV modules and combiner boxes and the ground grid used under high voltage equipment to reduce touch potential. The ground grid would be composed of copper wire and would be limited to the substations. Galvanized metal posts and epoxy-coated rebar may be used in lieu of cathodic protection if supported by soil conditions. If cathodic protection is recommended, a sacrificial anode type cathodic protection system would be provided. Institute of Electrical and Electronics Engineers (IEEE), Electric Power Research Institute (EPRI), and the National Association of Corrosion Engineers (NACE) guidelines would be used in establishing the necessity, type and extent of cathodic protection equipment.

2.2.4.5 Internal Project-Related Roads

Project-related roads within the solar plant site would include the perimeter road and solar field access ways as described below. The proposed primary and secondary site access roads are described in Section 2.2.5.2, *Project Access Roads*.

Perimeter Road

A new perimeter road would be located just inside the site's perimeter fence and within the solar field area around specific blocks of equipment to allow access by maintenance and security personnel. The perimeter roads would total approximately 10 miles in length. The perimeter roads would be approximately 20 feet wide and would be composed of native graded and compacted dirt. Alternatively, the perimeter road may use an aggregate base in some or all areas to meet Project dust and flood control requirements. The road would facilitate access through the site for non-four-wheel-drive vehicles and would be maintained to minimize dust that could be associated with use of vehicles for monitoring and security needs. It would also serve as a fire-break around the solar field.

Solar Field Access Ways

Within the solar field, access ways would be built to provide vehicle access to the solar equipment (PV modules, inverters, transformers) for O&M activities. These access ways would be approximately 20 feet wide and located approximately every 500 to 1,300 feet across the solar field. The existing soil surface would be graded and compacted using onsite materials to facilitate use by two-wheel-drive vehicles. Each end of each access way would connect to the perimeter road.

2.2.4.6 Stormwater Management

Gabion-lined channels (or soil cement or rip rap lined channels) approximately 50 feet wide would be built along the northeast corner and in the southeast portion of the solar field north of Highway 168 (see **Figure 2-2**). These channels would be approximately 3,000 feet and 1,500 feet long respectively and they would redirect water flow disturbed by the solar field back to their respective existing washes.

In addition to the channels, culverts would be installed in the proposed landscaped berms to be constructed parallel to both sides Reservation Road but outside the road ROW so the berms do not alter the flow of stormwater through the site. Any necessary repairs or modifications to the existing culverts under Reservation Road would be made during the construction of the solar field.

2.2.4.7 Vegetation Management

The portions of the site not covered by roads, O&M facilities, and electrical facilities would be allowed to re-vegetate following construction. Vegetation would be maintained to a height of no more than approximately 12 inches as needed for site maintenance and fire-risk management using mechanical and chemical controls. Project roads and the O&M area would remain free of vegetation.

2.2.4.8 Landscaping along Reservation Road

Earthen mounds would be constructed along portions of the north and south sides of Reservation Road outside the road ROW to mitigate the potential visual impact of the solar array as seen while driving along Reservation Road. The height of the berm would be approximately six feet tall with 3:1 side slopes. It would be about 40 feet wide at bottom and 5 feet wide at top. It would be landscaped with low-profile, low-water, native vegetation.

2.2.4.9 Lighting

Permanent lighting would be provided within the O&M area, the substation, and at the Project entrance gate. Construction may be required during some night-time periods for installation, service or electrical connection, inspection, and testing activities. Nighttime activities would be performed with temporary lighting. Night lighting used during construction, operation, and maintenance of the Project would be controlled or reduced using directed lighting, shielding, and/or reduced lumen intensity. The Applicant would prepare a Lighting Management Plan for construction and operation of the Project.

2.2.4.10 Wastewater Treatment

Wastewater generated during construction and operation would include sanitary waste, storm water runoff from controlled areas, and water from excavation dewatering during construction (if dewatering is required). These wastewaters may be classified as hazardous or nonhazardous depending on their chemical quality and handled and disposed of in accordance with applicable law.

The Project also would generate onsite domestic water and sanitary sewer waste from the O&M building. A septic tank and drain field system would be used for collection, treatment, and disposal of sanitary sewer waste. The sanitary waste system would not receive other wastes or surface runoff from the O&M area (i.e., hazardous materials or contaminated runoff). No connection to any existing sanitary sewer system is anticipated.

2.2.4.11 Noxious Weed and Pest Control

The Applicant would prepare a Noxious Weed Management Plan for the Project that would follow integrated approach as outlined in the interagency guidance *Partners Against Weeds* (1996). Herbicides such as Roundup (glyphosate) would be used to control noxious weeds, if required. Pest control may also be required, including control of rodents and insects inside of the buildings and electrical equipment enclosures.

2.2.5 Offsite Linear Facilities

Offsite facilities would include the gen-tie line as described in Section 2.2.5.1, the project access roads described in Section 2.2.5.2, and other Project features described in Sections 2.2.5.3 through 2.2.5.5.

2.2.5.1 230 kV Transmission Line (Gen-Tie)

The Project would require the construction of an approximately 2.0 mile single-circuit 230kV gen-tie and an approximate 0.7 mile double-circuit 230kV gen-tie for interconnection to the utility transmission grid system. The proposed gen-tie route for the single-circuit portion of the line would proceed south from the solar facility project substation on the north side of Highway 168 and then cross about 1.1 miles of Tribal land where it would enter Federal lands managed by the BLM. The route on BLM lands would be approximately 0.6 miles long. Once on BLM, the line would continue southeasterly to a new switch structure to be located north of where a new switchyard would be built in the future by NV Energy if needed. Initially, the gen-tie line would connect to this new switch structure and be built directly to the existing Reid-Gardner Substation which would require the addition of two breakers. From the switch structure, the line would be built on double-circuit structures across approximately 0.3 miles of BLM and 0.5 miles of private land owned by NV Energy to the Reid-Gardner Substation. The gen-tie line would change ownership between the Project and NV Energy at the switch structure.

NV Energy would construct the new switchyard once enough generation comes online to justify its construction. At that time the gen-tie (both the portion from the Project site and the portion to Reid-Gardner) would be connected from the switch structure to the switchyard.

From the solar project substation location north of Highway 168, the gen-tie would follow an existing transmission line south to the point where it would exit the Reservation and enter BLM-administered land. As described above, from that point, the gen-tie would turn southeast to switch structure. An alternative switch structure location was identified just east of the location described above. From either location, a double-circuit 230 kV line would be routed across BLM lands and private lands owned by NV Energy to the Reid-Gardner Substation. **Figure 2-5** shows the location of the proposed gen-tie route.

The overhead 230 kV line would be installed on approximately 20 to 30 steel monopole structures spaced approximately 400 to 800 feet apart. The proposed ROW would be 150 feet wide. The structures would be up to approximately 120 feet above grade with approximately 15-foot spacing between conductors and minimum ground clearance of 26 feet, per local and national electrical code requirements. The structures would accommodate either a single-circuit or double-circuit configuration. Monopole structures would be galvanized steel with a dull gray appearance and would be used to support interconnection to the NV Energy transmission system (see **Figure 2-6**). Angle structures would require a foundation to support the structure. The switch structure would be an H-Frame configuration.

All overhead electrical lines would be designed and installed in accordance with the Avian Power Line Interaction Committee's (APLIC) Suggested Practices for Avian Protection on Power Lines (APLIC, 2006). The Applicant also would prepare a Bird and Bat Conservation Strategy (BBCS) to address potential impacts to birds and bats during the construction, operations, and maintenance phases of the Project.

2.2.5.2 Project Access Roads

Two short access roads would be constructed for the Project. Both would be approximately 20 feet wide. The first would be approximately 100 feet in length and would connect the southern portion of the solar site with the State Highway 168. The second access road would connect the portion of the solar site located north of Highway 168 to the highway. The access roads would be utilized for delivery of all Project components, and would be used by workers traveling to and from the site for construction. The primary access road would be comprised of native graded and compacted dirt and may be improved to aggregate rock or paved for dust control. In addition, road improvements to Highway 168 may be required to facilitate construction of the access roads connecting to Highway 168.

Secondary Access Roads (intended primarily for emergency access) approximately 200-feet in length would be built in two locations to provide access to the respective arrays north and south of Highway 168. The secondary access roads would connect Highway 168 to the project site to the north, but its entrance would be located further west along Highway 168 than that of the proposed primary access road. The secondary access road for the array south of Highway 168 would be located along the easternmost boundary of the southern array with its entrance located along Highway 168.

All improvements and other measures required to build and operate these access points on Highway 168 will be determined by the Nevada Department of Transportation (NDOT) through the required permitting process. These features could include traffic control during construction, the development of acceleration (accel) and deceleration (decel) lanes at the primary access points, and others.

2.2.5.3 Electric Distribution Line

A new distribution line interconnecting to the existing NV Energy distribution service would be installed to provide electricity during construction and operation. This line would be located between the construction trailer area and the existing distribution line. Poles would be spaced an average of 300 feet and would be about 55 feet tall.

Alternatively, generators may be used to provide temporary construction and operation power when needed. During operations, the Project would generate its own power during daylight hours for equipment operation. During non-daylight hours, the Project would require power to

keep transformers energized, maintain communications to Project equipment, and provide power for heating, ventilation, air conditioning, and lighting at the O&M building.

2.2.5.4 Communication Systems Infrastructure

Multiple communication systems would be used during construction and operation. These systems would include telephone, fiber optics, and T1 internet. The Applicant expects to utilize existing wired or wireless telecommunications facilities. In the event that these facilities are not available in the Project vicinity, the Applicant would install hard-wired (land-line) systems, underground or on overhead lines, as part of the electrical construction activities or would supplement with small aperture (less than 1 meter) satellite communications gear.

2.2.5.5 Intake and Water Pipeline

Water needed during construction would be provided via a new temporary metered intake installed in the Muddy River and a new temporary above-ground pipeline, approximately two miles in length to be constructed just outside the existing ROW of Reservation Road. The proposed pipeline route is shown on **Figure 2-1**. From the intake, the pipeline would travel north along a dirt road until it meets Reservation Road. The route continues north paralleling Reservation Road to the temporary water tank on the Project site.

The new intake would be a temporary structure to be used during the 15-month construction period. The structure would most likely consist of a 2-foot by 2-foot pad with a mounted centrifugal pump capable of providing adequate capacity (up to 500 gallons per minute [gpm]) and lift required to get water from the Muddy River to the water tank located on the project site via the proposed pipeline. The pumping apparatus would be located adjacent to the Muddy River with a flexible and/or rigid pipe intake located in the Muddy River.

The pipeline would be constructed of rigid pipe (most likely 10-inch HDPE fusion welded pipe). The pipe would be installed above grade and be supported by concrete (or equivalent) pipe supports approximately every 10 feet.

2.2.6 Temporary Facilities (To be removed following construction)

2.2.6.1 Water Intake and Water Pipeline

The intake and water pipeline discussed above will be removed when construction is completed.

2.2.6.2 Temporary Construction Workspace, Laydown, Mobilization Areas

The Project construction contractor would develop an approximately 10-acre temporary construction mobilization and laydown area within the eastern portion of the Project site (**Figure 2-2**) that would include temporary construction trailers with administrative offices, construction worker parking, temporary water service and fire water supply holding tanks, temporary construction power services, tool sheds and containers, as well as a laydown area for construction equipment and material delivery and storage.

An additional temporary construction area up to 10 acres in size for construction offices and parking would be located within Project site north of Highway 168. This area would provide laydown for installation of solar equipment in the immediate vicinity of panel installation and would later be used as part of the permanent solar facility area. The temporary mobilization and laydown area would be graded and compacted earth.

In addition, temporary construction areas would be located at each gen-tie structure location and at locations required for conductor stringing, splicing, and pulling operations to accommodate construction of the gen-tie. These areas, cumulatively totaling approximately 20 acres, would be required for staging equipment and materials for foundation construction and tower installation.

2.2.7 Water Supply

Up to 500 acre-feet (AF) of water would be required over an approximately 15-month period for construction-related activities, including dust control. The Project's construction water requirements will be met from existing surface water rights to flows in the Muddy River owned by the Moapa Band of Paiutes. The project will secure access to this water supply though an agreement with the Tribe.

After construction is complete, the Project's water consumption during operation would require up to 5 acre-feet per year. The Project would not require process water, but water would be used for dust control (possibly in conjunction with dust palliatives), domestic potable for the administrative area, and possibly panel washing. Water service during operation would be provided via a tap into the Moapa Valley Water District (MVWD) pipeline that crosses the solar site and/or water delivered to the site via truck.

The Applicant would prepare a Water Quality Management Plan that would include measures to be implemented to minimize the impacts to water quality from construction and O&M activities, including measures for erosion and sediment control, flood control, and stormwater monitoring and response.

2.2.8 Waste and Hazardous Materials Management

The primary wastes generated at the Project during construction, operation, and maintenance would be nonhazardous solid and liquid wastes. The types of wastes and their estimated quantities are discussed below and summarized in **Tables 2-3A** and **2-3B**. The Applicant would prepare an Emergency Response Plan and Spill Response Plan that would address waste and hazardous materials management, including Best Management Practices (BMPs) related to storage, spill response, transportation, and handling of materials and wastes. Waste management would emphasize the recycling of wastes where possible and would identify the specific landfills that would receive wastes that cannot be recycled.

2.2.8.1 Nonhazardous Wastes

The Project would produce wastes typically associated with construction and O&M activities. These would include defective or broken electrical materials, empty containers, the typical refuse generated by workers and small office operations, and other miscellaneous solid wastes.

The Project would generate onsite domestic water and sanitary sewer waste from the O&M building. A septic tank and drain field system would be used for collection, treatment, and disposal of sanitary sewer waste (see Section 2.2.6.2, *Wastewater*).

Table 2 3A
Wastes Potentially Generated by Construction of the Project

Waste	Origin	Composition	Estimated Quantity	Classification	Disposal
Scrap wood, steel, glass, plastic, paper	Construction activities	Normal refuse	400 tons	Nonhazardous	Recycle and/or dispose of in industrial or municipal landfill
Scrap metals	Construction activities	Parts, containers	<4 tons	Nonhazardous	Recycle and/or dispose of in industrial or municipal landfill
Waste oil filters	Construction equipment and vehicles	Solids	1000 lbs	Used Oil	Recycle at a permitted Treatment, Storage, and Disposal Facility (TSDF)
Oily rags, oil sorbent excluding lube oil flushes	Cleanup of small spills	Hydrocarbons	200 cubic ft	Used Oil	Recycle or dispose at a permitted TSDF
Spent lead acid batteries	Construction machinery	Heavy metals	20	Hazardous	Recycle or dispose offsite at a Universal Waste Destination Facility
Spent alkaline batteries	Equipment	Metals	100 lbs	Universal waste solids	Recycle or dispose offsite at a Universal Waste Destination Facility
Waste oil	Equipment, vehicles	Hydrocarbons	1000 gallons	Used Oil	Dispose at a permitted TSDF
Sanitary waste	Portable toilet holding tanks	Solids and liquids	400,000 gallons	Nonhazardous liquid	Remove by contracted sanitary service

* Containers include <5-gallon containers and 55-gallon drums or totes

2.2.8.2 Hazardous Materials and Hazardous Wastes

Limited quantities of hazardous materials would be used and stored on site for construction and O&M activities. The Applicant would prepare hazardous materials management plans, if needed, and a Spill Prevention, Control, and Countermeasure (SPCC) Plan in accordance with EPA regulations, including hazardous materials information sheets.

During construction, the primary hazardous materials on site would be the fuels and solvents associated with construction equipment. **Table 2-3B** lists the hazardous materials anticipated that would be stored and used on site during operation. Material Safety Data Sheets (MSDSs) for each of these materials would be provided in the Emergency Response Plan.

Table 2 3B
Hazardous Materials That May Be Used During Operation

Hazardous Material	Storage Description; Capacity	Storage Practices and Special Handling Precautions
Mineral Insulating Oil	Carbon steel transformers; total onsite inventory of 80,000 gallons.	Used only in transformers, secondary containment for each transformer would be managed in accordance with the Spill Response Plan.
Batteries, lead acid based and/or lithium ion	Battery-based emergency back-up power at each of the PCS.	Sufficient cooling capacity to maintain ambient temperatures appropriate for the selected battery would be provided.
Propane	Generator-based emergency back-up power at each of the nine PCS shelters (or one centralized generator); tanks at PCS will be sized between 20 and 100 gallons (or 1000 gallons if one centralized tank).	Would be managed in accordance with the Spill Response Plan.
Herbicide Roundup® (glyphosate) or equivalent; Pesticide	Brought on site by licensed contractor, used immediately.	No mixing will occur on site and no herbicides will be stored onsite

2.2.9 Fire Protection

The Project's fire protection water system would be supplied from a water storage tank located near the O&M building. During construction, one electric and one diesel-fueled backup firewater pump would deliver water to the fire protection water-piping network. Fire protection pump flow rates would be in accordance with applicable standards. A smaller electric motor-driven jockey pump would maintain pressure in the piping network. If the jockey pump is unable to maintain a set operating pressure in the piping network, a main fire protection pump would start automatically. All fire protection system pumps must be shut off manually.

The electrical equipment enclosures that house the inverters and transformers would be either metal or concrete structures. Any fire that could occur would be contained within the structures, which would be designed to meet National Electric Manufacturers Association (NEMA) 1 or

NEMA 3R IP44 standards for electrical enclosures (heavy duty sealed design to withstand harsh outdoor environmental conditions).

The site perimeter road would act as a fire break for the solar field. If determined necessary, an additional fire break could be installed outside the perimeter fence. The Applicant would prepare and implement a Fire Management Plan.

2.2.10 Health and Safety Program

The Applicant would require that all employees and contractors adhere to appropriate health and safety plans and emergency response plans. All construction and operations contractors would be required to operate under a Health and Safety Program (HASP) that meets industry standards. All site personnel would be required to go through a new hire orientation and follow a Worker Education and Awareness Plan (WEAP), which would address Project-specific safety, health, and environmental concerns.

2.2.11 Project Construction

Prior to any activity on the site, required resource protection plans would be developed and regulatory and permit conditions would be integrated into the final construction compliance documents. Project construction would begin once all applicable approvals and permits have been obtained. Construction is expected to take approximately 12-15 months and would include the major phases of mobilization, construction grading and site preparation, installation of drainage and erosion controls, PV panel/tracker assembly, and solar field construction. The Applicant expects that Project construction would commence in Fall 2015.

2.2.11.1 Site Preparation

A geotechnical investigation and environmental clearance surveys would be performed at the Project site prior to commencement of construction activities. During the environmental clearance phase, the boundaries of the construction area would be delineated and marked. The site then would be prepared for use. During site preparation, vegetation removal and grading would be minimized to the extent reasonably practicable. Site preparation techniques are described below.

Geotechnical Investigation

To develop a geological profile of the area underlying the Project site, the Applicant would conduct a geotechnical investigation to determine the engineering characteristics of local soils and geology. The geotechnical investigation would include digging exploratory pits in several locations. Samples would be taken to a laboratory for analysis including moisture content and general soil composition.

In addition to the exploratory pits, several types of steel posts would be driven into the soil similar to the steel posts that would be used by the tracker or fixed tilt solar structures. The posts would then go through pneumatic testing to determine pile loads supported by the adjacent soil. The posts would also be tested for corrosion rates in the soil.

Surveying and Staking

Prior to construction, the limits of construction disturbance areas would be determined by surveying and staking. Where necessary, the limits of the ROWs also would be flagged. All construction activities would be confined to these areas to prevent unnecessary impacts affecting sensitive areas. These areas, which would include buffers established to protect biological resources, also would be staked and flagged. The locations of underground utilities would be located and staked and flagged in order to guide construction activities.

Stakes and flagging that are disturbed during construction would be repaired or replaced before construction continues. Stakes and flagging would be removed when construction and restoration of temporary disturbance areas are completed.

Clearance Surveys and Fencing

During the clearance phase, the boundaries of the construction area would be surveyed for sensitive species. Clearance would occur only during weather conditions appropriate for the relevant activity.

Approved tortoise fencing would be installed around the perimeter of the construction area to prevent tortoise from moving onto the site from adjacent areas. Professional biologists would be retained to survey and relocate desert tortoise, and perform other sensitive species surveys, removal, and mitigation.

Vegetation Removal and Treatment

Where even minor grading is not necessary within the solar field, vegetation would be mowed to a level to create a safe work environment. Within the solar field areas that would be disked and rolled or graded, existing vegetation would be worked into the underlying surface soils. Vegetation would be permanently cleared from roadways, access ways, and where concrete foundations are used for the inverter equipment, substations, and O&M facilities. The site perimeter road would act as a fire break, In addition, a 10-foot-wide fire break would be established outside the perimeter fence if needed and maintained clear of vegetation.

Site Clearing, Grading, and Excavation

The cuts and fills associated with all earthwork required to install drainage control detention basins, access roads, foundations for Project-related buildings (O&M building, PVCS, onsite

substation, gen-tie footings, etc.), and berms along the road are planned to be balanced on-site. If needed, a small borrow area could be developed to provide some of the soil needed for the berm. Trenching would be required for placement of collector lines. The solar field would require a positive natural terrain slope of less than 5 percent.

The disc and roll technique would be used generally to prepare the surface of the solar field for post and PV panel installation. The disk and roll technique uses conventional farming equipment to prepare the site for construction. Typical farming equipment includes: rubber tired tractors with disking equipment and drum rollers with limited use of scrapers to perform micrograding. In areas where the terrain is not suitable for disk and roll, conventional cut and fill grading would be used to prepare the relevant area. The desire and intent is to preserve the macro-level topography in order to maintain the existing drainage pattern across the site, while flattening the surface of the existing topography enough to provide safe and efficient working conditions. Prior to construction, the final grading plan for the solar field would identify the locations where each of the various grading techniques would be used.

Grading and excavation requirements are described below for each of the primary Project components.

Solar Field and Internal Roads. Within the solar field, some grading would be required for roads and access ways between the solar arrays, and for electrical equipment pads. In general, the design standard for the roads and access ways within the solar field would be consistent with the amount and type of use they would receive. Speed limit for vehicles using these roads would be 15 mph for dust control.

Within the solar arrays, the amount of the grading would be minimal where the panel support foundations are driven. For locations where driven foundations are not feasible, other types of embedded foundations may be employed. Grading also would be required within each solar array to accommodate a level concrete pad to support the location for the inverter and transformer.

Onsite Substation. The onsite substation would require a graded site to create a relatively flat surface for proper operation. The site would be graded with approximately 1 percent maximum slope in either direction. The substation interior would be covered with aggregate surfacing for safe operation.

O&M Area. O&M area would be graded. The O&M building would be constructed and the remaining area would be graded and appropriately surfaced for parking, roads, material storage and the erection of a temporary assembly structure for use during the construction phase of the Project.

Gravel, Aggregate, and Concrete Needs and Sources

Approximately 7,500 cubic yards of concrete would be poured in place for equipment, gen-tie structures, and building foundations. Aggregate material would be used for the trench backfill, parking lot, substation area, and, if determined necessary, for the perimeter road and access roads. Riprap material would be required for erosion control. This material would be likely sourced from the Moapa River Reservation under purchase agreements with the Tribe.

2.2.11.2 PV Solar Array Assembly and Construction

Prior to any construction in PV equipment areas, the clearance and site preparation steps for those areas would be completed. Within each area designated for PV equipment, the construction sequence would follow a generally consecutive order. The construction of the solar field would proceed by arrays. Each array would contain solar panels, a PCS, and a step-up transformer. Within each array, materials for each row of PV modules would be staged next to that row. Within each array, work would proceed as follows:

1. Prepare trenches for underground cable;
2. Install underground cable;
3. Backfill trenches;
4. Install steel posts and table frames;
5. Install PV modules;
6. Install concrete footings for inverters, transformers, and substation equipment;
7. Install inverter and transformer equipment;
8. Perform electrical terminations; and
9. Inspect, test, and commission equipment.

Cable trenches would be used to provide underground connection of Project equipment. Trenches would contain electrical conductors for power generation and fiber optic cables for equipment communication. Trenches would vary between 2 to 3 feet wide and 2 to 3 feet deep depending on the number of conductors and voltage of equipment to comply with applicable electrical codes.

Trench excavation would be performed with conventional trenching equipment. Excavated soil would be maintained adjacent to the trench and used as backfill once conductors are installed and tested. Excavated soil would not be removed from the Project site. Temporary sheeting or bracing would be used as necessary to support trench side walls in areas where soils are soft or collapsible. Underground cable would be installed and “stubbed up” to provide cable access during the electrical terminations step.

The trench itself would be first backfilled with 3 to 4 inches of sand (or appropriate native material) to provide suitable bedding for installed conductors, and then 3 to 4 inches of sand (or appropriate native material) would be deposited on top of installed conductors. The remaining backfill would be composed of the native excavated soils and compacted. During the backfill,

underground utility marking tape would be installed 12 inches below grade to indicate the type of conductors installed beneath. Trenching and excavating machines would be used for base trenching, light skiploaders for backfill, and light rollers for compaction.

The assembled solar equipment would be installed on steel posts to which steel table frames would be attached. Trucks would be used to transport the PV modules to the solar field. A small mobile crane may be used to assist construction workers in setting the solar modules on the driven steel posts. Final solar field assembly would require small cranes, tractors, and forklifts.

2.2.11.3 Electrical Collection and Transmission System Construction

2.2.11.3.1 Collector System

Electrical construction would include installation of electrical equipment and necessary infrastructure to energize the equipment.

Electrical construction would consist primarily of the following elements:

- **Equipment**—Installation of all electrical equipment including DC combiner boxes, PCS Shelters (including inverters), transformers, circuit breakers, disconnect switches, switchgear and distribution panels, lighting, communication, control, and SCADA equipment.
- **Cables**—Installation of all cables necessary to energize the Project equipment including instrument control wiring. High, medium, and low voltage cables would be routed via cable trays, above-grade conduits, below-grade conduit in duct bank, and overhead structures as necessary.
- **Grounding**—All equipment and structures would be grounded as necessary. Within the solar field, an appropriate grounding system would be engineered and constructed in order to maintain personnel safety and equipment protection.
- **Telecommunications**—Multiple communication systems would be required for the Project to properly operate, including T-1 internet cables, fiber optic, and telephone. All communications would be installed during electrical construction.

Standard transmission line construction techniques would be used to construct the 34.5 kV collector lines. Primary stages in construction would be foundation installation, tower installation, and conductor stringing.

Wood poles used for the overhead 34.5 kV collector line would be embedded into the ground to a depth of at least 10 percent of the pole height plus 2 feet. Installation of wood poles is anticipated to require auguring holes approximately 2 feet in diameter and 8 feet deep.

Poles would be placed into their holes using backhoes or heavy lifter vehicles. Aggregate or high-strength backfill would be used to stabilize the installed poles.

2.2.11.3.2 Gen-Tie Line

Construction Access

Mobile construction equipment access would be required at each transmission structure. The Project would use a combination of existing and new access roads and spur roads on designated routes to get construction equipment to each structure location.

To access the ROW, construction vehicles would use the existing roads off State Highway 168 and existing secondary access roads where possible.(such as the paved roads providing access to the Reid-Gardner Substation). Where the gen-tie would parallel existing lines, the road associated with the existing line would be used and upgraded as needed and short spur roads may be developed to access structure locations. The existing roads within the ROW at some locations may require improvements. Typical improvements would consist of minor grading and possibly limited addition of road base or rock in areas to allow safe vehicle travel. If used, spur roads would cross drainages at grade where possible. Standard road design techniques such as installing water bars and dips to control erosion may be used in sloped areas as necessary.

Geotechnical Testing

Geotechnical investigations are needed to determine the site soil conditions and to provide geotechnical engineering data for the foundation design of the proposed gen-tie lines. Right-of-entry and geotechnical field work would require limited access to locations along the gen-tie routes.

Prior to final design of the lines, analysis of soil borings must be conducted along the proposed alignment to establish the design parameters for structural foundations. Up to ten test locations would occur at proposed structure locations on Reservation, BLM, and private land. The testing process begins with field survey staking of each test location. This would be done from a standard light-duty pickup truck and a one or two-person survey crew. Test locations would be marked with wooden stakes and flagged. Once marked, a two or three-person drilling crew would collect samples via a truck-mounted drill rig at various depths along the boring. Samples collected from the borings would be analyzed to determine soil classification, moisture content, density, depth to groundwater and other characteristics. Each boring would be approximately 6 inches in diameter and 50 feet deep.

Work areas surrounding each geotechnical boring location that would be needed for construction equipment, vehicles, and personnel during geotechnical activities would be confined to a 30-foot x 40-foot area. After each test boring is completed, the spoils would be hand-backfilled into the boring hole and lightly compacted. After backfill, the test location would be smoothed and hand-graded as necessary to return the area to the pre-test grade.

Structure Sites

A 200-foot by 200-foot (40,000 square-foot) area around each structure site would be cleared as required for safe and efficient construction. These areas will be temporarily disturbed during construction. The permanent disturbance area associated with each structure is estimated to be approximately a 50-foot diameter (approximately 2,000 square foot) area. Topography, environmental and cultural constraints, and best engineering practice will be used to determine final structure locations.

Foundation Installation

The steel towers used for the gen-tie would be supported by steel-reinforced poured pier concrete foundations suitable for conditions at the site. These foundations are constructed by auguring a cylindrical hole using a truck-mounted drilling rig. Reinforcing steel and anchor bolt cages would be installed in the hole and then the hole would be backfilled with concrete. Steel tower foundations would range in size from approximately 4 to 7 feet in diameter, and in depth from 12 to 30 feet. Larger diameter and deeper foundations would be located where the transmission line turns at an angle of 30 degrees or greater.

Tower Installation

Structures would be staged in a designated laydown/stringing area or delivered and unloaded adjacent to their respective final locations. They would be placed onto their foundations using a crane. The poles would be supported, as necessary, during bolting to the foundation to ensure correct pole seating.

Conductor Stringing

Conductor stringing would likely be conducted one phase at a time, with all equipment in the same operational place until all phases of that operation are strung. Pull sites are the locations where equipment would pull the conductors and static wires into place. Conductor stringing equipment would be set up at both ends of each straight section of line. This equipment must be located a distance away from the dead-end structure to minimize the vertical construction loads imposed upon the dead-end structure during the wire stringing. The distance between the dead-end structure and the conductor stringing equipment is generally described by a 3:1 slope from the top of the structure.

Pull sites would be temporarily disturbed during this activity. Each site would be 100-foot by 700-foot, and one pull site would be required at each turning point.

The sequence of conductor stringing operations is summarized below:

- *Finger Lines*: The finger line is used to pull the later pilot line through travelers installed on each davit arm. The finger line is typically a small diameter synthetic rope that can be pulled by hand or crawler tractor.
- *Pilot Lines*: The finger line, once in place, is used to pull the pilot line which is a larger synthetic rope or small steel line. This requires a vehicle at each side of the pulling area, a Bullwheel tensioner truck doing the pulling of the pilot line, and a drum puller truck on the other side holding the reel.
- *Conductor*: Using the pilot line, the conductor is pulled through. Other activities may include offset clipping if suspension insulators are not plumb, or splicing together two reels of conductor. Once complete, the traveler equipment would be removed.
- *Tensioning*: After the conductor is completely strung through a section, the section is tensioned to comply with design specifications. Once the conductor has been tensioned or loosened to meet the appropriate sag specification given the ambient temperature, the dead-end clamps would be tightened.

Grounding

Ground rods would be hammered into the earth with a jackhammer device attached to a small excavator (such as a Bobcat). Typically, the rods are 8- to 12-feet long and can be longer if needed by joining multiple rods. Ground rods can be connected to the pole or in the case of the steel pole, to the anchor bolts. The 230 kV towers may be connected to the overall plant ground grid or remain independent.

Equipment

Typical equipment expected to be used for transmission line construction includes: backhoe, truck-mounted tower hole auger, forklift, crane, line truck with air compressor, various pickup and flatbed trucks, conductor reel and tower trailers, bucket trucks, and truck-mounted tensioner and puller.

2.2.11.3.3 Substation Construction

The onsite substation would be constructed in compliance with applicable electrical safety codes. Substation construction would consist of site grading, concrete equipment foundation forming and pouring, crane-placed electrical and structural equipment, underground and overhead cabling and cable termination, ground grid trenching and termination, control building erection, and installation of all associated systems including, but not limited to heating, ventilating, and air conditioning (HVAC) system components; distribution panels; lighting; communication and control equipment; and lightning protection.

The 2-acre substation area would be excavated to a depth of 10 feet. A copper grounding grid designed to meet the requirements of IEEE 80, “IEEE Guide for Safety in AC Substation Grounding,” would be installed and the foundations for transformers and metal structures would be prepared. Final ground grid design would be based on site-specific information such as

available fault current and local soil resistivity. Typical ground grids consist of direct buried copper conductors with 8-foot-long copper-clad ground rods arranged in a grid pattern to approximately 3 feet outside of the substation area.

After installation of the grounding grid, the area would be backfilled, compacted and leveled followed by the application of 6 inches of aggregate rock base. Equipment installation of the transformers, breakers, buswork and metal dead-end structures would follow. The transformer containment area would be lined with an impermeable membrane covered with gravel. A pre-fabricated control house would be installed to house the electronic components required of the substation equipment.

2.2.11.4 Road System Construction

Project-related roads are discussed in Section 2.2.4.5, *Internal Project-related Roads*. The construction entrance and exit gates would be established. The Project's main access roads would be graded and constructed in order to facilitate travel to the Project site and would connect to the existing State Highway 168. Any required improvements to Highway 168 would be made under a permit issued by NDOT.

Within the solar field, some grading would be required for roads and access ways between the solar arrays. In general, the design standard for the roads and access ways within the solar field would be consistent with the amount and type of use they would receive. The existing surface area would be graded and compacted using onsite materials to facilitate use by two-wheel-drive vehicles. All Project-related roads are proposed to be native graded/compacted dirt; however, roads may alternatively use an aggregate base in some or all areas to meet Project dust and flood control requirements.

2.2.11.5 Onsite Building Construction

Following site preparation of the O&M area, construction of the O&M building would commence. Concrete foundations would be poured to support the permanent O&M building and an area adjacent to the building may be paved for parking. The modular steel up to 2,000 square-foot building would be erected. A 4-inch aggregate base would be installed on all unpaved areas within the O&M area.

If necessary, above ground water tanks would be erected and connected to a service pump. The active and reserve septic fields would be established and connected to O&M buildings waste system. Temporary construction power would be connected to the O&M building. The potable water treatment equipment would be installed in the O&M building and the water pump and line would be connected to potable water tanks.

2.2.11.6 Site Stabilization, Protection and Reclamation

During and following construction, appropriate water erosion and dust-control measures would be implemented to prevent an increased dust and sediment load to ephemeral washes around the construction site and to comply with EPA requirements. Dust during construction would be controlled and minimized by applying water and palliatives that are approved by the agencies prior to use. Palliatives applied after construction and on areas that will not be disturbed during operation require a one-time application and do not require any water. Depending on the site preparation technique, organic matter may also be worked into the upper soil layers, or mulched onsite and redistributed into the fill (except under equipment foundations, trenches and roadways) to aid in dust control. In some areas to be graded that lie outside of the solar field, native vegetation may be harvested for replanting to augment soil stabilization.

Soil stabilization measures would be used to prevent soil being detached by storm water runoff. The Applicant would employ BMPs to protect the soil surface by covering or binding soil particles. The Project would incorporate erosion-control measures required by regulatory agency permits and contract documents as well as other measures selected by the contractor. Project-specific BMPs would be designed by the contractor, and associated figures are to be included in the final Project Storm Water BMP Plan.

The Applicant would prepare a Rehabilitation Plan that would be implemented immediately after construction for the areas that are temporarily disturbed.

2.2.11.7 Workforce Schedule, Equipment and Materials

The onsite construction workforce would consist of laborers, craftsmen, supervisory personnel, support personnel, and construction management personnel. The onsite construction workforce is anticipated to be an average of 400 to 600 construction workers with a peak not expected to exceed 1,200 workers at any given time. Most construction staff and workers would commute daily to the jobsite from within Clark County, primarily from the Reservation and the Las Vegas areas.

Construction generally would occur between 5:00 a.m. and 5:00 p.m., and may occur seven days a week. Additional hours may be necessary to make up schedule deficiencies, or to complete critical construction activities. For instance, during hot weather, it may be necessary to start work earlier (e.g., at 3:00 am) to avoid work during high ambient temperatures. Further, construction requirements would require some night-time activity for installation, service or electrical connection, inspection and testing activities. Nighttime activities would be performed with temporary lighting.

The Applicant would prepare a Worker Environmental Awareness Plan (WEAP) for the Project and all construction workers would be required to complete WEAP training.

Construction materials such as concrete, pipe, PV modules, wire and cable, fuels, reinforcing steel, and small tools and consumables would be delivered to the site by truck. Initial grading

work would include the use of primarily rubber-tired tractors, disk/ tillers and vibratory rollers and limited use of track-driven excavators, graders, dump trucks, and end loaders, in addition to the support pickups, water trucks, and cranes. Throughout the construction process, temporary above ground fuel storage tanks would be located at the site for construction equipment fueling. As the Project moves into the stages of civil work, equipment for foundations and road construction would be brought in, including paving machines (if required), trenching machines, pumps, additional excavators for foundation drilling, tractors, and additional support vehicles.

Construction activities would follow a generally consecutive order. However, most construction activities associated with each construction component would overlap to some degree and would include the following:

- Installation of tortoise fencing and security fencing;
- Construction of the access road, laydown areas, substation concrete pad and distribution line;
- Site preparation activities, and construction of drainage control detention basins;
- Erection of collection system and substation; and
- PV solar array assembly, construction and commissioning.

The tables below provides a description of the onsite equipment expected to be used for solar panel array and collection system construction (**Table 2-4A**), onsite substation construction (**Table 2-4B**), and gen-tie line construction (**Table 2-4C**). Actual construction equipment details and durations may vary.

TABLE 2 4A
ESTIMATED ON SITE EQUIPMENT FOR Solar Panel Array and Collection System CONSTRUCTION

Equipment Description	Daily Quantity	Horsepower	Fuel Type	Equivalent Full-Load Operating Time (hr/day)	Vehicle Miles (VMT) per Day on Unpaved Surface
Install BMP Measures (Part of Site Preparation)					
Rough Terrain Forklift	2	75	Diesel	1.7	10
Delivery / Work Trucks	3	200	Diesel	2	5
Site Prep – Solar Arrays					
Truck, Pick-Up (Survey Crew)	2	180	Gas	1.7	5
Grader	6	200	Diesel	6.8	20
Backhoe/Front Loader	2	120	Diesel	3.4	10
Tractor / Disc	3	210	Diesel	6.8	20
Scraper	4	265	Diesel	3.4	15
Compactor	2	120	Diesel	1.7	10
Water Truck	2	175	Diesel	6.8	N/A

TABLE 2 4A ESTIMATED ON SITE EQUIPMENT FOR Solar Panel Array and Collection System CONSTRUCTION					
Equipment Description	Daily Quantity	Horsepower	Fuel Type	Equivalent Full-Load Operating Time (hr/day)	Vehicle Miles (VMT) per Day on Unpaved Surface
Site Prep – Roads					
Grader	3	200	Diesel	6.8	20
Backhoe/Front Loader	1	120	Diesel	6.8	10
Compactor	2	120	Diesel	6.8	20
Water Truck	2	175	Diesel	6.8	N/A
Dump Truck	5	235	Diesel	2.7	10
Install Fencing					
Rough Terrain Forklift	2	75	Diesel	1.7	10
Delivery / Work Trucks	3	200	Diesel	1	5
Post Installation					
Delivery / Work Trucks	2	200	Diesel	1	5
Post Machine	7	45	Diesel	8.1	1
Rough Terrain Forklift	2	75	Diesel	6.8	10
Install Support Structure					
Rough Terrain Forklift	6	75	Diesel	6.8	10
Delivery / Work Trucks	2	200	Diesel	1	5
Install Inverters and Switchgear & sub-structure					
Crane	2	125	Diesel	4.5	1
Backhoe/Front End Loader	2	120	Diesel	6.8	10
Delivery / Work Trucks	2	200	Diesel	1	5
DC and AC Wire Installation (UG)					
Backhoe/Front Loader	4	120	Diesel	6.8	10
Crawling Trencher	2	100	Diesel	4.1	1
Mini-Excavator	4	42	Diesel	6.8	10
Delivery / Work Trucks	2	200	Diesel	1	5
DC and AC Wire Installation (AG)					
Rough Terrain Forklift	3	75	Diesel	1.7	10
Delivery / Work Trucks	2	200	Diesel	1	5
Module Installation					
Rough Terrain Forklift	15	75	Diesel	1.7	10
Delivery / Work Trucks	5	200	Diesel	1	5
O&M Building					
Rough Terrain Forklift	1	75	Diesel	1	1
Manlift	2	110	Diesel	3	1
Misc. (Across Project Site)					
Crane, Hydraulic, Rough Terrain	1	125	Diesel	1.5	N/A
Delivery: Truck, Semi, Tractor	1	310	Diesel	0.5	5

TABLE 2 4A ESTIMATED ON SITE EQUIPMENT FOR Solar Panel Array and Collection System CONSTRUCTION					
Equipment Description	Daily Quantity	Horsepower	Fuel Type	Equivalent Full-Load Operating Time (hr/day)	Vehicle Miles (VMT) per Day on Unpaved Surface
Delivery: Truck, Flatbed, 1 Ton	1	180	Diesel	0.5	5
Forklift, less than 5 Ton	3	75	Diesel	3.8	5
Forklift, greater than 5 Ton	2	85	Diesel	3.8	5
Motor, Auxiliary Generator Power for trailers	4	24	Diesel	8	N/A
Trailer, Office, 40’	14	N/A	N/A	N/A	N/A
Trailer, Office, 20’	4	N/A	N/A	N/A	N/A
Skid Steers	5	75	Diesel	1.7	5
AWD Gator/Cart	20	15	Diesel	8.1	10
Water Truck	4	175	Diesel	6.8	N/A
Delivery / Work Trucks	10	200	Diesel	1	5
Electrical Generators/Pumps	4	50	Diesel	8.1	N/A

2.2.11.7 Construction Traffic

Typical construction traffic would consist of trucks transporting construction equipment and materials to and from the site and vehicles of management and construction employees during the construction period. Most construction staff and workers would commute daily to the jobsite from within Clark County, primarily from the Reservation and Las Vegas areas. All traffic would use I-15 and Highway 168 to access the site. The Applicant would prepare a Transportation Management Plan to address Project-related traffic.

2.2.11.8 Construction Power

Construction power would be provided by a connection to the local Overton Power distribution service in the area via a new distribution line (up to approximately 1,000-feet in length). The distribution line would be located between the construction trailer area and the Overton Power point of interconnection. The construction power service would be left in place once construction is completed to provide operational power. Alternatively, generators may be used to provide temporary construction power until interconnection occurs.

TABLE 2 4B ESTIMATED ON SITE EQUIPMENT FOR ONSITE SUBSTATION CONSTRUCTION					
Equipment Description	Daily Quantity	Horsepower	Fuel Type	Equivalent Full-Load Operating Time (hr/day)	Vehicle Miles (VMT) per Day on Unpaved Surface
Steel Structures					
Boom Truck - 33 Ton	1	290	Diesel	1.5	1
Manlift	1	110	Diesel	1.2	1
Material Delivery - Hwy Tractor w 40' Flat	3	220	Diesel	0.2	4
Insulators, Bus, & Electrical Equipment					
Boom Truck	1	220	Diesel	1.5	1
Manlift	2	110	Diesel	1.2	1
Welder Truck	2	210	Diesel	1.2	4
Material Delivery - Hwy Tractor w 40' Flat	4	310	Diesel	0.2	4
Material Delivery - Heavy Haul	1	300	Diesel	1.5	4
Crane	1	500	Diesel	1	N/A
Control Wiring					
Boom Truck	1	220	Diesel	0.6	1
Manlift	2	110	Diesel	0.8	1
1 ton crew vehicle	1	260	Diesel	0.2	4
Fiber Splicer Van	1	180	Gas	0.6	4
Test Equipment Van	1	180	Gas	1.7	4
Rough Terrain Forklift	1	75	Diesel	1.7	6

TABLE 2 4C ESTIMATED ON SITE EQUIPMENT FOR GEN TIE LINE CONSTRUCTION					
Equipment Description	Daily Quantity	Horsepower	Fuel Type	Equivalent Full-Load Operating Time (hr/day)	Vehicle Miles (VMT) per Day on Unpaved Surface
Steel (Hauling, Shake-Out, Assembly and Erection)					
Crane, Hydraulic, 150/300 Ton	1	250	Diesel	1.8	5
Crane, Hydraulic, Rough Terrain, 25 Ton	1	125	Diesel	1.8	5
Truck, Flatbed w/Boom, 12 Ton	1	235	Diesel	1	10
Truck, Crew Cab, Flatbed, 1 Ton	6	180	Gas	1.1	10
Truck, Semi Tractor	1	310	Diesel	6	10
Trailer, Flatbed, 40’	1	N/A	N/A		10
Water Truck	1	175	Diesel	4.5	N/A
Motor, Auxiliary Power	1	5	Gas	1	0
Compressor, Air	1	75	Gas	2	15
Conductor / Shield Wire / OPGW (Stringing, Sagging, Deadending and Clipping)					
Truck, Flatbed, w/ Bucket	3	235	Diesel	3	15
Tension Machine, Conductor	1	135	Diesel	1.5	1
Tension Machine, Static	1	135	Diesel	0.2	1
Truck, Sock Line, Puller, 3 Drum	1	310	Diesel	2.3	1
Truck, Wire Puller, 1 Drum	1	310	Diesel	2.3	1
Truck, Semi, Tractor	2	310	Diesel	6	10
Water Truck	1	175	Diesel	4.5	N/A
Truck, Crew Cab, Flatbed, 1 Ton	3	180	Gas	1.4	10
Back Hoe, w/ Bucket	1	85	Diesel	3	1
Truck, Mechanics	1	260	Diesel	3	15
Crane, Hydraulic, Rough Terrain	1	125	Diesel	1	10
Motor, Auxiliary Power	2	5	Gas	2.3	N/A
Cleanup					
Truck, Flatbed, w/ Bucket, 5 Ton	1	235	Diesel	2	5
Excavator, Bucket Type	1	165	Diesel	4.5	5
Truck, Semi, Tractor	1	310	Diesel	4.5	10
Truck, Dump, 10 Ton	1	235	Diesel	3	10
Motor Grader	1	110	Diesel	8	20
Truck, Flatbed	1	210	Diesel	2.1	10
Truck, Pick-Up	1	210	Diesel	2.1	10
Motor, Auxiliary Power	1	5	Gas	0.5	N/A

2.2.12 Operation and Maintenance

Operation of the Project would require a workforce of up to 5 full time-equivalent (FTE) positions. This workforce would include administrative and management personnel, operators, and security and maintenance personnel. Employees would be based at the O&M building.

A solar PV project uses no process water, gas, or fuels for the power generation process. The maintenance protocol is mainly routine inspections. The frequency and type of maintenance by equipment type is described in **Table 2-5**. During the first year of operation, the frequency of inspections would be increased to address settling and electrical termination torque (e.g., for year 1, inspections shown as semi-annually are performed quarterly, inspections shown as annual are performed semi-annually). At designated intervals, approximately every 10 to 15 years, major equipment maintenance would be performed. Periodic routine maintenance comprises monthly, quarterly, semi-annual and annual inspections and service.

Operation and maintenance would require the use of vehicles and equipment including crane trucks for minor equipment maintenance. Additional maintenance equipment would include forklifts, manlifts, and chemical application equipment for weed abatement. Pick-up trucks would be in daily use on the site. No heavy equipment would be used during normal plant operation.

Dust during operations and maintenance would be controlled and minimized by applying water and palliatives.

TABLE 2 5
ROUTINE MAINTENANCE PROTOCOL

Equipment	Maintenance Interval	Task
PV Modules	Quarterly	• Visually inspect panels for breakage and secure mounting • Visually inspect modules for discoloration • Visually inspect wiring for connections and secure mounting • Visually inspect mounting structure for rust and erosion around foundations • Manually clean localized debris from bird droppings, etc.
	Semi-Annually	• Clean modules if determined necessary
Inverters	Semi-annually	• Perform temperature checks on breakers and electrical terminations • Visual inspection of all major components and wiring harnesses for discoloration or damage • Measure all low voltage power supply levels • Inspect/remove any dust/debris inside cabinet • Inspect door seals • Check proper fan operation • Inspect and clean (replace if necessary) filters • Check electrical termination torque • Check the operation of all safety devices (e-stop, door switches, ground fault detection)

TABLE 2 5 ROUTINE MAINTENANCE PROTOCOL		
Equipment	**Maintenance Interval**	**Task**
	Annually	• Check all nuts, bolts and connections for torque and heat discoloration • Calibrate control board and sensors • Inspect air conditioning units for proper operation
Medium voltage transformers	Semi-annually	• Perform temperature check • Inspect door seals • Record all gauge readings • Clean any dirt/debris from low voltage compartment
Substation transformers	Semi-annually	• Inspect access doors/seals • Inspect electronics enclosure and sensor wiring • Record all gauge readings
	Annually	• Inspect fans for proper operation • Calibrate temperature and pressure sensors • Pull oil sample for oil screening and dissolved gas analysis.
Breakers and switchgear	Semi-annually	• Inspect for discoloration of equipment and terminations • Inspect door seals
	Annually	• Check open/close operation
Overhead transmission lines	Annually (and after heavy rains)	• Inspect guy wires and tower angle • Visual inspection of supports/insulators • Visual inspection for discoloration at terminations
Roadways	Annually (and after heavy rain)	• Inspect access ways and roads that cross drainage paths for erosion
Vegetation	Semi-annually	• Inspect for localized vegetation control to restrict height to less than 12 inches to address faster growth vegetation • Apply herbicides as necessary to control noxious weeds
	Every 3 years	• Mowing as required to reduce vegetation height to 9 inches
Water Well (if used for construction)	Monthly	• Visual inspection • Pressure test
O&M Building	Semi-annually	• Check smoke detectors • Apply pesticides as necessary to control rodents and insects
	Annually	• Check weather stripping and door/window operation • Check emergency lighting • Inspect electrical service panel
Backup Power	Annually	• Visually inspect backup power system • Perform functional test of backup power system
Fencing	Monthly (and after heavy rain)	• Inspect fence or vandalism and erosion at base

2.2.13 Decommissioning

The anticipated operational life of the Project would be 30 years to 50 years. The useful life of the solar equipment would be approximately 30 years and the possibility of subsequent repowering could extend the useful life up to 50 years. After the life of the Project, the site would be decommissioned and existing facilities and equipment would be removed.

Project decommissioning would involve removal of the solar arrays and other facilities, with some buried components (such as cabling) potentially remaining in place. Following decommissioning, the area would be reclaimed and restored according to applicable regulations at the time of decommissioning.

To ensure that the permanent closure of the facility does not have an adverse effect, the Applicant would prepare a Decommissioning Plan. The Decommissioning Plan would be developed in coordination with the Tribe and BIA, with input from other agencies as appropriate. The plan would address future land use plans, removal of hazardous materials, impacts and mitigation associated with closure activities, schedule of closure activities, equipment to remain on the site, and conformance with applicable regulatory requirements and resource plans. It would be consistent with requirements and goals set forth in the Rehabilitation Plan.

Removal and recycling of the PV modules would be done in accordance with the Applicant's prefunded module recycling program, established in 2005, through which modules may be returned to the Applicant for recycling at no cost to the end user. As modules are sold to individual solar projects, the anticipated recycling cost is pre-funded into a trust account that is managed by a third-party trustee. The program enables all components of the modules, including the glass and the encapsulated semi-conductor material, to be processed into new modules or other products.

2.3 Description of Proposed Alternatives

This section describes the process used to identify potential alternatives to the Project that were initially identified by the BIA, cooperating agencies, and the Applicant. Alternatives identified by these entities and those suggested by the public or developed to respond to issues identified during the scoping process were evaluated for feasibility using the following criteria:

- Does the alternative fulfill the Project's purpose and need?
- Does the alternative minimize impacts to human and environmental resources?
- Is the alternative distinguishable from other alternatives considered, such that it does not have substantially similar consequences?
- Is the alternative technically and/or economically feasible to construct, operate, maintain, and decommission?

Based on this evaluation, potential alternatives were categorized as those that were carried forward for detailed analysis and those that were considered but dropped from detailed analysis.

2.3.1 Alternatives Considered and Carried Forward for Detailed Analysis

This section describes the alternatives to the Project that are carried forward for full environmental impact analysis in Chapter 4, Environmental Consequences.

2.3.1.1 No Action Alternative

Under NEPA, the BIA and cooperating agencies must consider an alternative that assesses the impacts that would occur if the Project were not constructed and the lease agreement and ROWs were not approved. The No Action Alternative assumes that the lease agreement is denied, the BLM utility ROWs are not issued, and the solar Project is not built. Under the No Action Alternative, the purpose and need of the Project would not be met. The Tribe would not benefit economically from the energy production that can be obtained from their prime solar resources and the development of sustainable renewable resources would not occur. The Federal government, Nevada, and neighboring states would not be assisted in their efforts to meet their renewable energy goals.

2.3.1.2 Alternative Gen-Tie Route

Another potential route would originate on tribal lands at a solar project substation location south of Highway 168. From this substation, it would cross about 0.8 miles of Reservation land following an existing right-of-way (ROW) on the Reservation south-southeast for about 0.4 miles to a point where it would turn southeast and enter BLM-administered lands at a location similar to where the proposed gen-tie route enters BLM lands.

Once on BLM, this alternative would follow the same route as the proposed gen-tie to the Reid-Gardner Substation . The specifications and construction methods would be the same as described for the proposed gen-tie. The location of this alternative gen-tie route is shown on **Figure 2-7**.

2.3.1.3 Alternative Water Supply

An alternative source of construction water would be groundwater using existing water rights owned by the Moapa Band of Paiutes. Under this alternative a well would be drilled on the Project site and water would be delivered from the well to the temporary storage tanks via a temporary pipeline constructed aboveground. In this case, this Alternative Water Supply would replace the Intake and Water Pipeline described in Section 2.2.5.5. All other components of the Proposed Action would be the same.

If the well alternative is used to provide construction water, the well would be drilled on the solar site to a depth of up to 1,000 feet using a truck-mounted drilling rig with supporting equipment for water supply and drilling fluid management. Estimated well depth is based on existing groundwater basin information and actual depth may vary. Drilling techniques would use either a drilling fluid or compressed air to stabilize the bore hole during the drilling process. If geologic conditions are suitable, a drilling fluid, consisting of water mixed with various types of clay (e.g., bentonite) would be used to cool the drill bit and remove materials and cuttings displaced by the advancing drill bit. Drilling fluid is circulated down the center of the drill stem, and allowed to flow back to the surface where it is routed to a surface tank where suspended gravel and sand can settle out of the drilling fluid. The drilling fluid is then recirculated through the drill stem. Supporting equipment often consists of a water truck and surface tanks for drilling fluid management. If geologic conditions do not permit use of a drilling fluid to stabilize the bore hole, compressed air may be used to remove drill bit cuttings and any groundwater encountered during the drilling process.

Drilling would terminate when the required depth is reached to provide an adequate water supply. Once the bore hole is completed, a casing would be set to the bottom of the hole (or top of the bedrock if encountered). If the water bearing layer is sand or gravel, a fine mesh screen of variable length would be attached to the bottom of the well casing. Depending on well conditions, filter gravel, clay seal, and cement grout would be installed between the borehole and casing to complete the well construction.

The construction water storage tanks(s) would be located within the project boundary and used to store water during the construction period and have a capacity up to 50,000 gallons. After the construction period, the construction water tanks would be removed from the site.

The Applicant would prepare a Groundwater Monitoring and Reporting Plan to guide implementation of the Project if groundwater is used.

2.3.2 Alternatives Considered but Eliminated from Detailed Analysis in the EIS

The alternatives below were not carried forward for detailed analysis because they did not meet the purpose and need, were determined to not be practical or feasible from the technical and/or economic standpoint, or would cause greater environmental effects than the alternatives analyzed in detail. The reasons for eliminating these alternatives are described briefly below.

2.3.2.1 Alternative Reservation Locations

The Applicant evaluated other sites on the Reservation for potential solar development. This evaluation considered a variety of factors including up to 1,000 contiguous developable acres, topography, drainage, potential impacts to sensitive resources (including special status species

and cultural resources), and proximity to transmission interconnection points and highway access.

This process was designed to identify areas with the greatest potential for development while minimizing potential adverse impacts or permitting issues. This included making use of existing infrastructure to minimize disturbance and impacts associated with the access roads and gen-tie lines. Large portions of the Reservation were eliminated from further consideration by applying these criteria.

The Applicant also eliminated the K Road Moapa Solar Project site, the Moapa Solar Energy Center site, and other sites on the Reservation previously studied and eliminated by the K Road Moapa Solar Facility EIS (BIA 2012). In addition, the 6,000 acre desert tortoise relocation areas associated with the K Road Moapa Project are not available for development.

The current Proposed Project site was identified as the best location for the proposed solar project for a number of reasons: it was identified by the Tribe as a viable solar site, it is close to transmission interconnection points at/near the Reid-Gardner Substation (which offer near-term interconnection opportunities), it has nearby road access, it has relatively low quality habitat for desert tortoise, and it has limited anticipated impacts to jurisdictional waters. Given the quality of the site, resource constraints on significant portions of the remaining reservation lands, and the importance of locating in close proximity to available transmission, the applicant was not able to find alternative sites where impacts would have been significantly distinguishable from and/or less substantial compared to the alternatives actually considered. Other suitable development sites would have substantially similar or greater consequences.

2.3.2.2 Alternative Off-Reservation Locations

The project is, by the terms of its purpose, limited to locations on the Moapa River Indian Reservation and held in trust by the BIA for the Tribe. Accordingly, BIA did not consider off-reservation alternatives.

2.3.2.3 Alternative Interconnection Options

Alternatives were considered that would interconnect the Project directly into the Reid-Gardner Substation. However, through the interconnection process, NV Energy has determined that this and any other potential generation projects that might be developed in the area must interconnect to a new switchyard located northeast of the existing Reid-Gardner Substation.

2.3.2.4 Concentrated Photovoltaic (CPV) Technology

CPV technology uses layers of wafers to absorb different wavelengths of sunlight and provide more power conversion efficiency than typical PV panels. This technology requires dual tracking technology to provide critical alignment with the direct sunlight in order to be efficient. CPV is

generally mounted on taller structures than traditional PV (as high as 40 feet above the surface). Because this technology is relatively new, there are risks for long-term performance reliability and manufacturing capacity to supply large-scale utility projects has not been proven to date. Therefore, this alternative has not been carried forward for detailed analysis.

2.3.2.5 Distributed Solar Generation

The concept of distributed solar generation locates smaller projects near the demand for electricity. Generally, these projects would generate power using PV panels (similar to all PV technologies). The PV panels could be installed on private or publicly owned residential, commercial, or industrial building rooftops or in other disturbed areas such as parking lots or disturbed areas adjacent to existing structures such as substations. To be a viable alternative to the proposed Project, there would need to be sufficient locations where new distributed solar generation could be installed to cumulatively generate 100 MW of capacity and sufficient local demand for this electricity.

In order to meet the Project's purpose, generation would need to be located on the Reservation and there are insufficient rooftops or other disturbed areas on the Reservation to make this option viable. Also, a true distributed generation project could not meet one of the fundamental objectives of the proposed utility-scale solar project: to provide renewable energy to utility off-takers. Rooftop systems that lack transmission only generate power for on-site consumption and the limited on-reservation uses create only a fraction of the demand that this Project seeks to serve. Distributed generation projects cannot fill the same energy needs as utility scale projects and one is not a feasible alternative for the other.

2.3.2.6 Wind Energy

Wind carries kinetic energy that can be utilized to spin the blades of wind turbine rotors and electrical generators, which then feed alternating current (AC) into the utility grid. Most state-of-the-art wind turbines operating today convert 35 to 40% of the wind's kinetic energy into electricity. A single 1.5-MW turbine operating at a 40% capacity factor generates 2,100 MW - hours (MWh) annually. Wind turbines currently being manufactured have power ratings ranging from 250 watts to 5 MW, and units larger than 7 MW in capacity are now under development (AWEA 2008).

The technology is well developed and can be used to generate significant amounts of power. The use of wind energy at the Project location could potentially be feasible at the scale of the proposed Project, but it would not eliminate impacts caused by the Project. A wind project would result in impacts on biological and cultural resources, and visual effects would be greater than with the proposed Project. The acreage of the impacted area would be dependent on the size of the turbines selected.

Alternative renewable technologies, including wind energy, were eliminated from detailed discussion because they are not within the Applicant's area of expertise, and so would not be technically or economically feasible for them to implement.

2.4 Federal, State and Local Permitting

If the Proposed Project is approved by the BIA and BLM, the Applicant would be required to obtain permits and other authorizations from Federal and state regulatory agencies prior to construction. These are identified in Section 1.5.

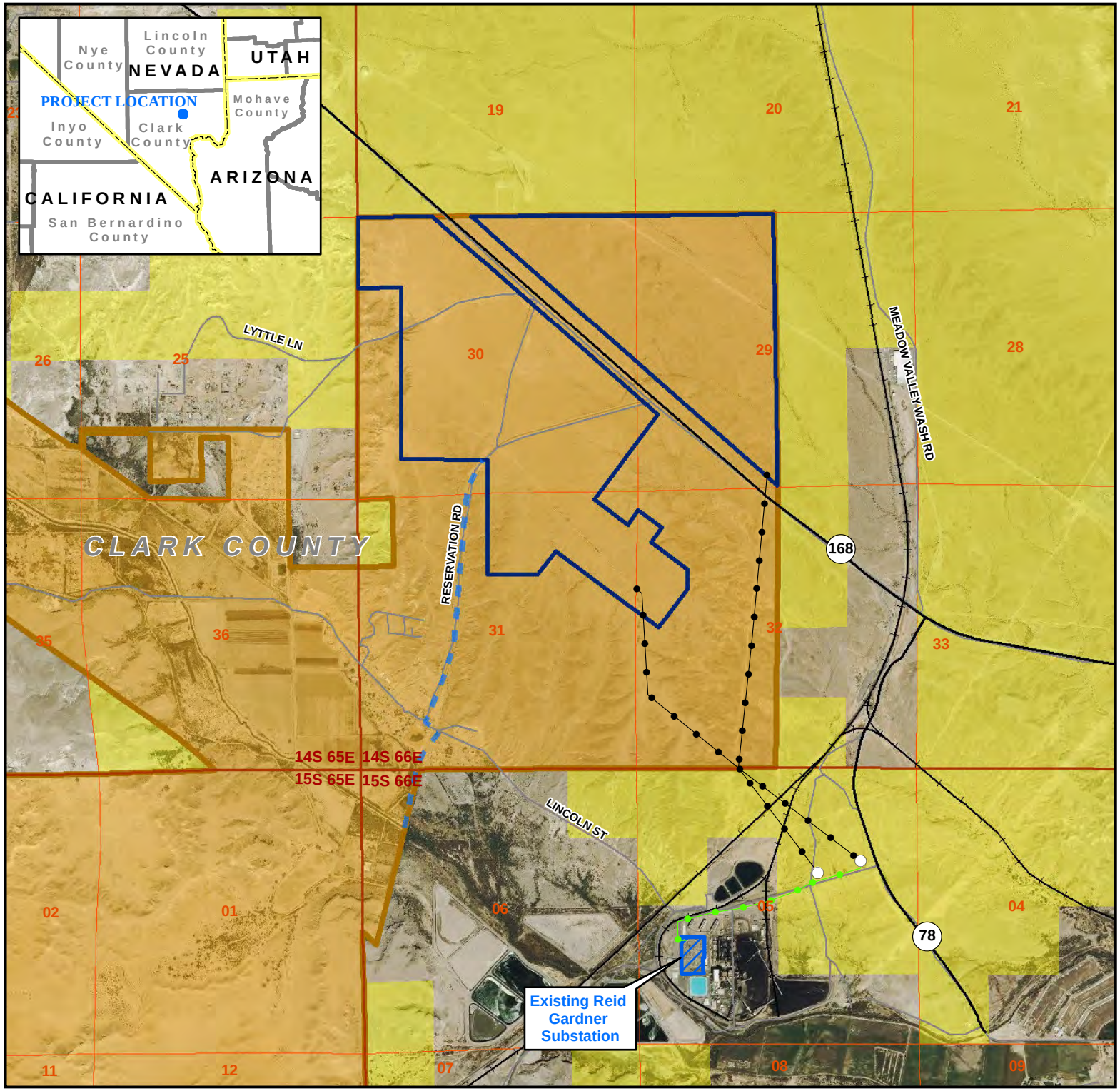

Legend

- Switch Station
- Gen-Tie Routes
- Double-Circuit Line
- Water Pipeline
- State Highway
- Road
- Railroad
- Project Area
- Existing Substation
- County Boundary
- Township / Range Boundary
- Section Boundary

Jurisdictional Land Ownership

- Bureau of Land Management Land
- Tribal Land

0 0.25 0.5 0.75 1

Miles

State Plane
North American Datum 1983
Nevada East, FIPS 2701, Feet

Aiya Solar Project

Figure 2-1
Project Area

Map Extent: Clark County, Nevada

Date: 05-06-15 | Author: rnc

I:\Solar Projectt/MXD's/Project Area

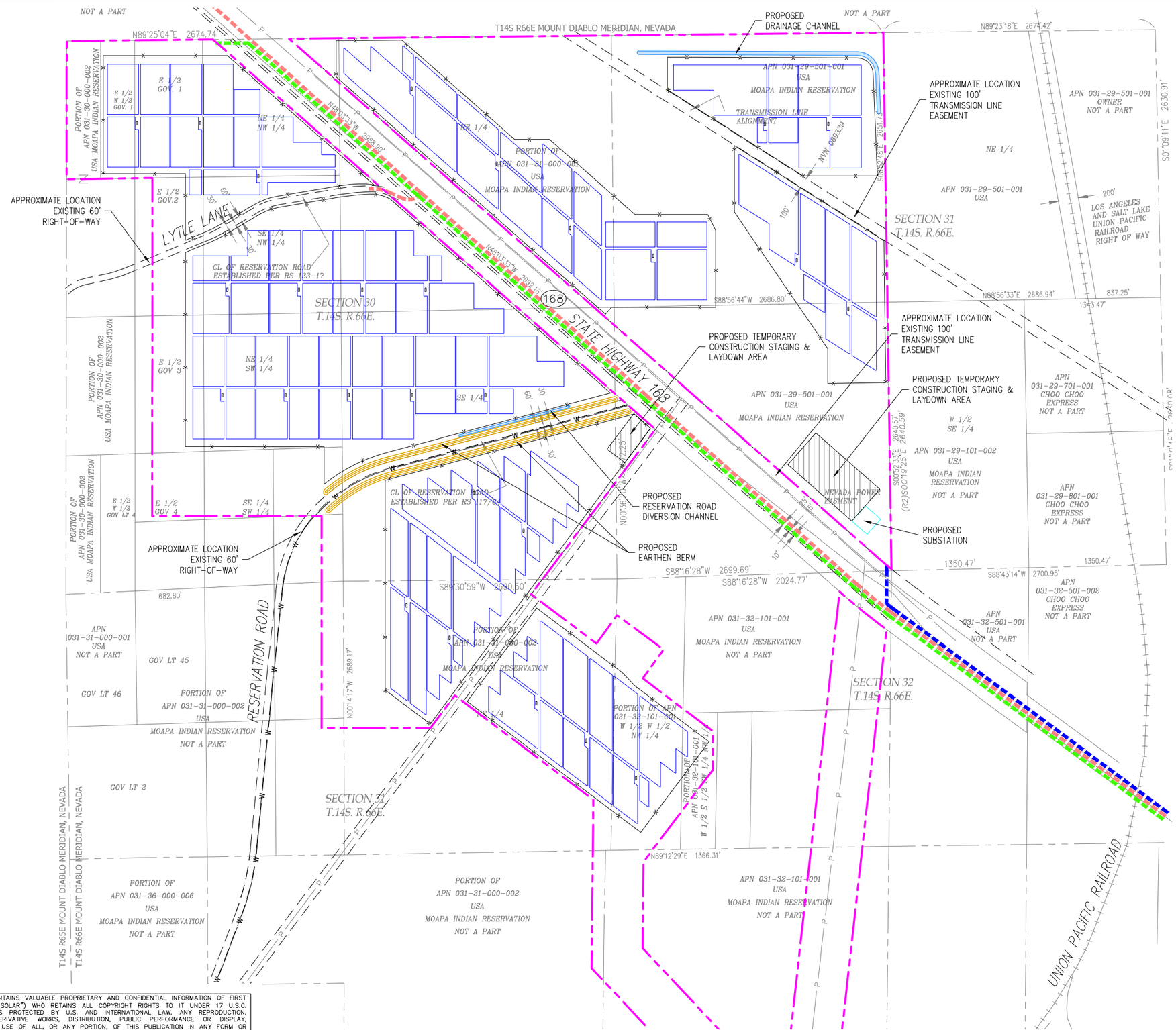

LEGEND

- SITE BOUNDARY
- PROPOSED PERIMETER CHAIN LINK FENCE
- PROPOSED SITE ACCESS OPTION 1
- PROPOSED SITE ACCESS OPTION 2
- PROPOSED SITE ACCESS OPTION 3
- PROPOSED WATER LINE
- PARCEL LINE
- EASEMENT/RIGHT-OF-WAY
- TYPICAL PV ARRAY

NOTES

THIS MAP IS FOR REFERENCE ONLY AND CONTAINS PARTIAL SURVEY.

OTHER REFERENCE FOR THIS MAP ARE CLARK COUNTY ASSESSOR'S PARCEL MAP AND BLM NEVADA MASTER TITLE PLATS.

SEE THE RECORDED DOCUMENTS FOR MORE DETAILED LEGAL INFORMATION.

NORTH

1000' 500' 0 1000'

First Solar
FIRST SOLAR, INC.
135 MAIN STREET, 6TH FLOOR
SAN FRANCISCO, CALIFORNIA 94105
PHONE: (415) 935-2500
WWW.FIRSTSOLAR.COM

Figure 2-2

REV	DATE	REVISION DESCRIPTION	BY	CHK	APP

FS JOB #:

PROJ. DEVT. ENGR: M. BOBER

PROJ. MGR:

SCALE: 1"=1000' @ 11"x17" SHEET

COPYRIGHT BY: FIRST SOLAR, INC.

SHEET TITLE

PRELIMINARY SITE PLAN (12/21/15)

SHEET 1 OF 2

THIS PUBLICATION CONTAINS VALUABLE PROPRIETARY AND CONFIDENTIAL INFORMATION OF FIRST SOLAR, INC. ("FIRST SOLAR") WHO RETAINS ALL COPYRIGHT RIGHTS TO IT UNDER 17 U.S.C. SECTION 106 AND IS PROTECTED BY U.S. AND INTERNATIONAL LAW. ANY REPRODUCTION, PREPARATION OF DERIVATIVE WORKS, DISTRIBUTION, PUBLIC PERFORMANCE OR DISPLAY, DISCLOSURE, AND/OR USE OF ALL, OR ANY PORTION, OF THIS PUBLICATION IN ANY FORM OR MEDIUM WITHOUT SPECIFIC WRITTEN AUTHORIZATION FROM FIRST SOLAR IS STRICTLY PROHIBITED.

THIS PRINT IS NOT TO BE USED FOR CONSTRUCTION UNLESS NOTED AND SIGNED OK FOR CONSTRUCTION ABOVE LAST REVISION.

COPYRIGHT © 2015 FIRST SOLAR, INC. ALL RIGHTS RESERVED

C:\Users\FS104849\AyalC-100-SP-AIYA.dwg FS104849 Dec 21 2015 - 9:01am

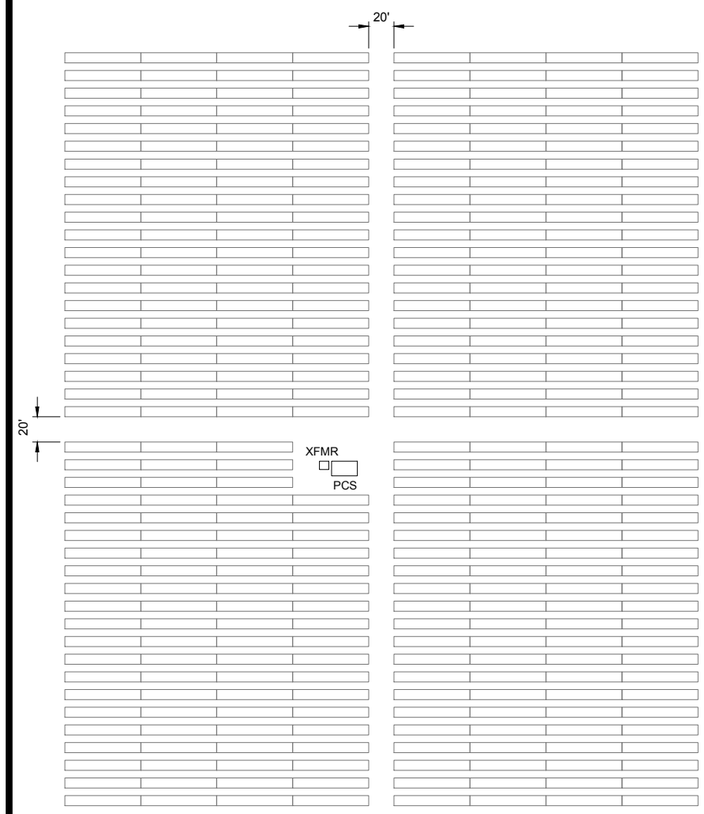

TYPICAL FIXED-TILT ARRAY
(4 HIGH MODULE)
NOT TO SCALE

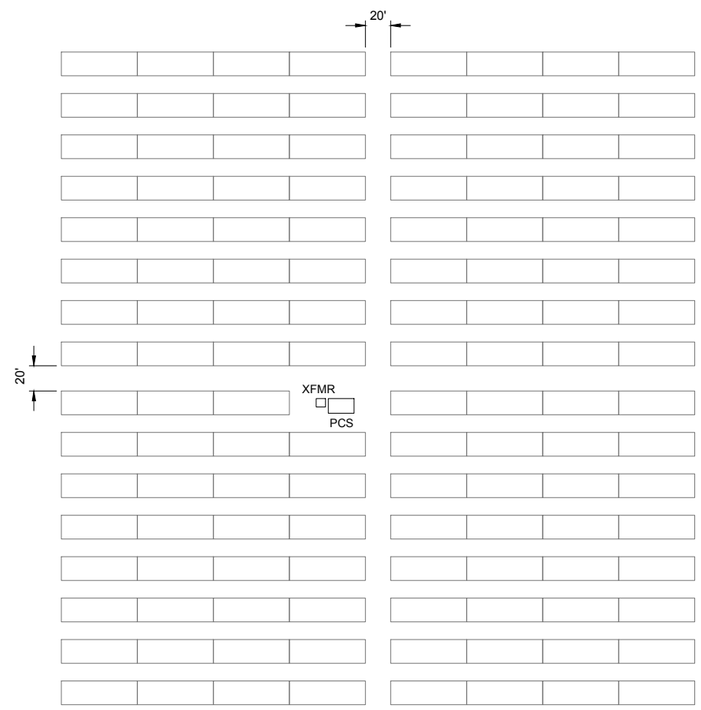

TYPICAL FIXED-TILT ARRAY
(10 HIGH MODULE)
NOT TO SCALE

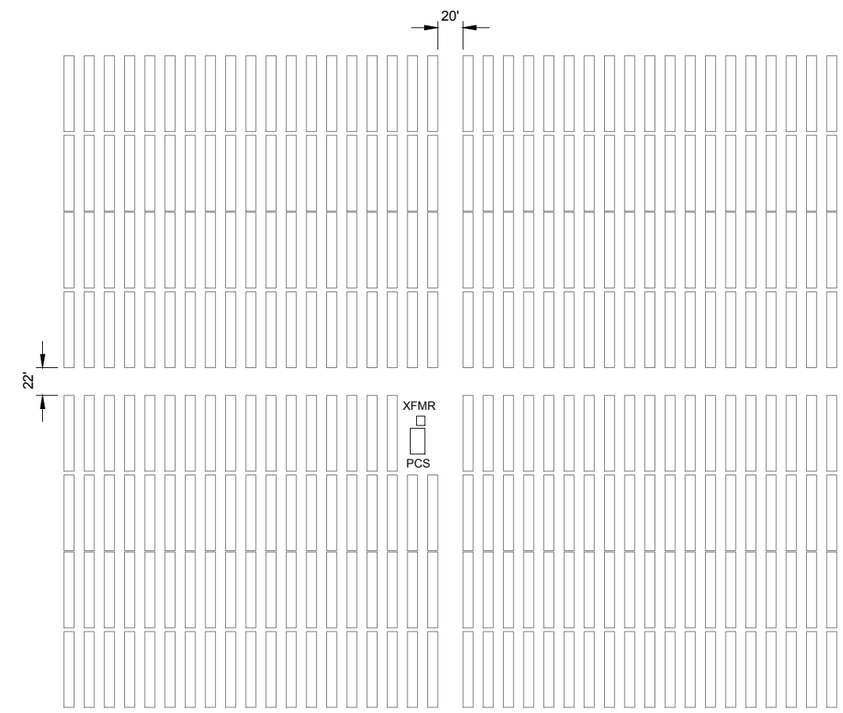

TYPICAL TRACKER ARRAY
NOT TO SCALE

NORTH

THIS PUBLICATION CONTAINS VALUABLE PROPRIETARY AND CONFIDENTIAL INFORMATION OF FIRST SOLAR, INC. ("FIRST SOLAR") WHO RETAINS ALL COPYRIGHT RIGHTS TO IT UNDER 17 U.S.C. SECTION 106 AND IS PROTECTED BY U.S. AND INTERNATIONAL LAW. ANY REPRODUCTION, PREPARATION OF DERIVATIVE WORKS, DISTRIBUTION, PUBLIC PERFORMANCE OR DISPLAY, DISCLOSURE, AND/OR USE OF ALL, OR ANY PORTION, OF THIS PUBLICATION IN ANY FORM OR MEDIUM WITHOUT SPECIFIC WRITTEN AUTHORIZATION FROM FIRST SOLAR IS STRICTLY PROHIBITED.

THIS PRINT IS NOT TO BE USED FOR CONSTRUCTION UNLESS NOTED AND SIGNED OK FOR CONSTRUCTION ABOVE LAST REVISION.

First Solar
FIRST SOLAR, INC.
135 MAIN STREET, 6TH FLOOR
SAN FRANCISCO, CALIFORNIA 94105
PHONE: (415) 935-2500
WWW.FIRSTSOLAR.COM

Figure 2-3

AIYA
MOAPA
CLARK COUNTY
NEVADA

REV	DATE	REVISION DESCRIPTION	BY	CHK	APP

FS JOB #:
PROJ. DEVT. ENGR: A. QUIG-HARTMAN
PROJ. MGR:
SCALE: NONE
COPYRIGHT BY: FIRST SOLAR, INC.

SHEET TITLE
TYPICAL ARRAY CONFIGURATIONS

COPYRIGHT © 2013 FIRST SOLAR, INC. ALL RIGHTS RESERVED

C:\Users\FS104849\Aiya\EIS Drawings\C-101-AC-AIYA.dwg FS104849 Dec 17, 2014 - 3:21pm

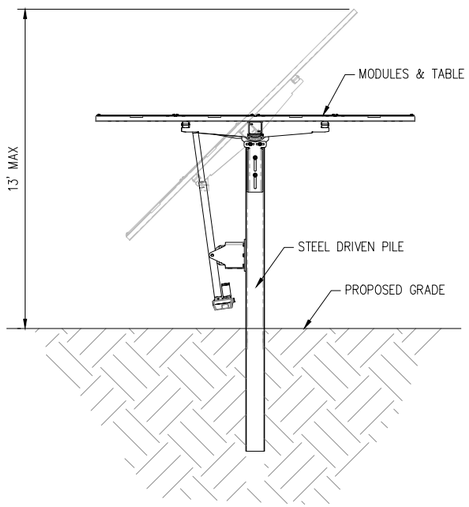

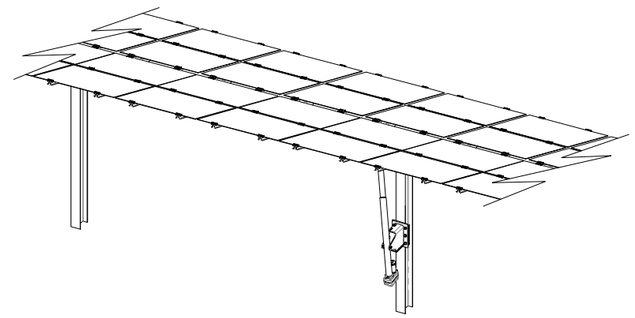

SINGLE AXIS TRACKER

NOT TO SCALE

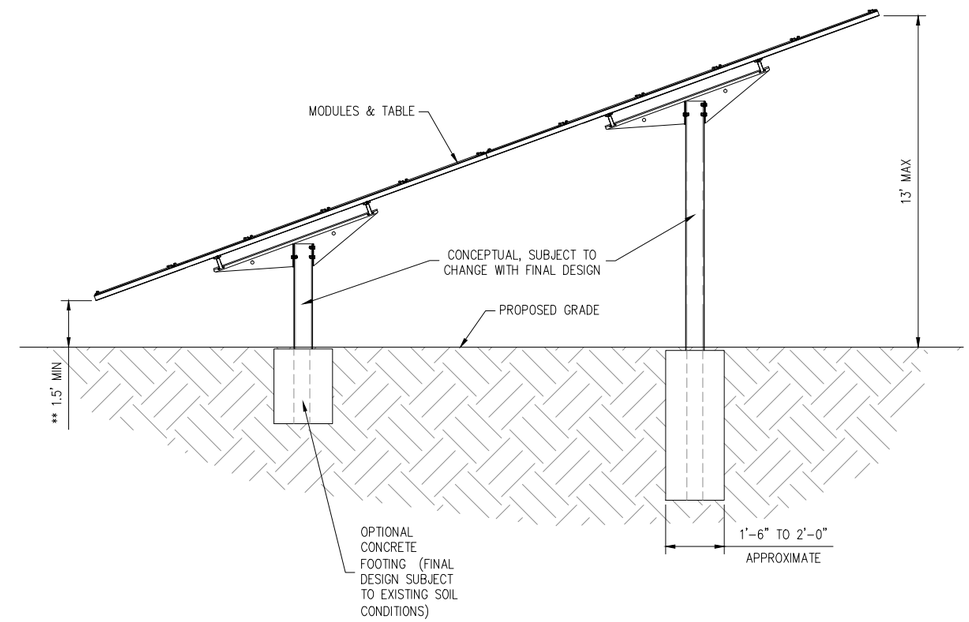

** NOTE: MINIMUM HEIGHT MAY VARY DUE TO FLOOD CONDITIONS.

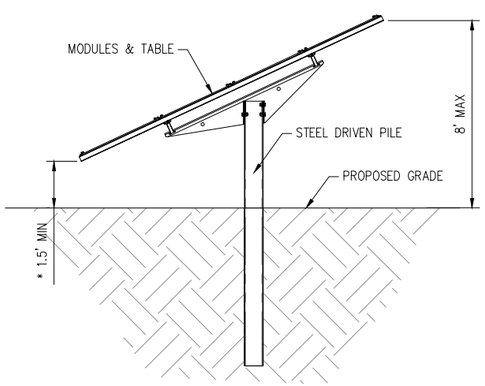

* NOTE: MINIMUM HEIGHT MAY VARY DUE TO FLOOD CONDITIONS.

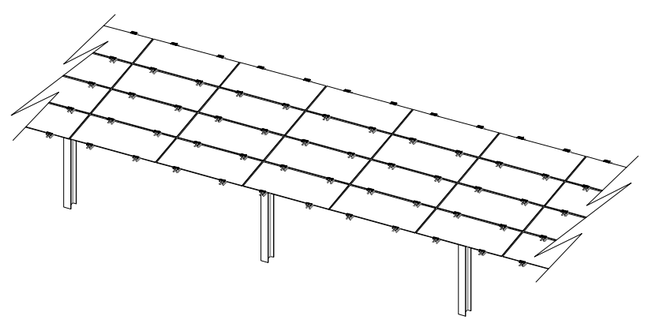

FOUR HIGH SYSTEM FIXED TILT

NOT TO SCALE

TABLE SYSTEM INFORMATION		
TYPE	ROW SPACING	ROW ORIENTATION
FIXED	14'-0" TO 16'-0"	EAST-WEST
TRACKER	16'-0" TO 22'-0"	NORTH-SOUTH
TEN HIGH	22'-0"	EAST-WEST

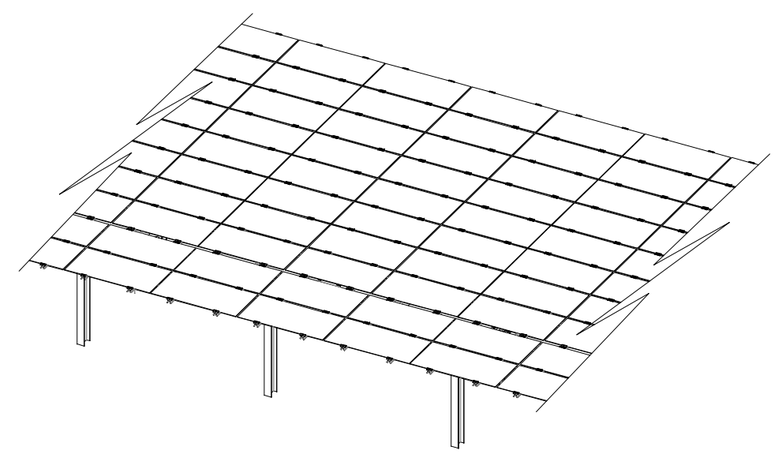

TEN HIGH SYSTEM FIXED TILT

NOT TO SCALE

THIS PUBLICATION CONTAINS VALUABLE PROPRIETARY AND CONFIDENTIAL INFORMATION OF FIRST SOLAR, INC. ("FIRST SOLAR") WHO RETAINS ALL COPYRIGHT RIGHTS TO IT UNDER 17 U.S.C. SECTION 106 AND IS PROTECTED BY U.S. AND INTERNATIONAL LAW. ANY REPRODUCTION, PREPARATION OF DERIVATIVE WORKS, DISTRIBUTION, PUBLIC PERFORMANCE OR DISPLAY, DISCLOSURE, AND/OR USE OF ALL, OR ANY PORTION, OF THIS PUBLICATION IN ANY FORM OR MEDIUM WITHOUT SPECIFIC WRITTEN AUTHORIZATION FROM FIRST SOLAR IS STRICTLY PROHIBITED.

THIS PRINT IS NOT TO BE USED FOR CONSTRUCTION UNLESS NOTED AND SIGNED OK FOR CONSTRUCTION ABOVE LAST REVISION.

First Solar
FIRST SOLAR, INC.
135 MAIN STREET, 6TH FLOOR
SAN FRANCISCO, CALIFORNIA 94105
PHONE: (415) 935-2500
WWW.FIRSTSOLAR.COM

Figure 2-4

AIYA
MOAPA
CLARK COUNTY
NEVADA

REV	DATE	REVISION DESCRIPTION	BY	CHK	APP

FS JOB #:
PROJ. DEVT. ENGR: A. QUIG-HARTMAN
PROJ. MGR:
SCALE: NONE
COPYRIGHT BY: FIRST SOLAR, INC.

SHEET TITLE
TYPICAL MOUNTING SYSTEM

SHEET 1 OF 1

C:\Users\FS104849\Aiya\EIS Drawings\C-102-MS-AIYA.dwg FS104849 Dec 17, 2014 - 3:22pm

COPYRIGHT © 2014 FIRST SOLAR, INC. ALL RIGHTS RESERVED

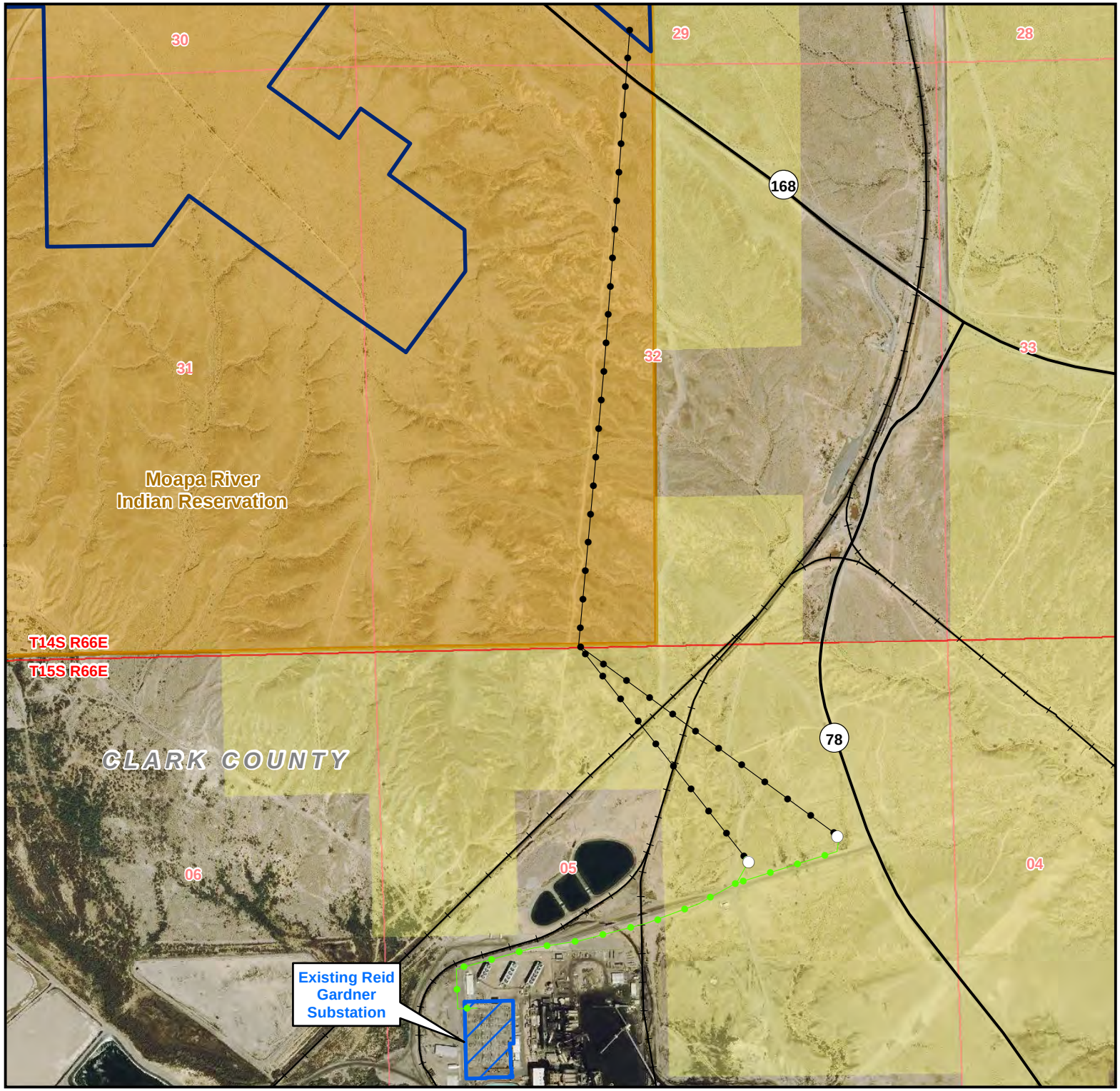

Legend

- Switch Structure
- Gen-Tie Routes
- Double-Circuit Line
- State Highway
- Railroad
- Existing Substation
- Proposed Solar Boundary
- Township/Range Boundary
- PLSS Section Line

Jurisdictional Land Ownership

- Bureau of Land Management Land
- Indian Land

0 500 1,000 1,500
Feet

Universal Transverse Mercator
North American Datum 1983
Zone 11 North, Meters

Aiya Gen-Tie Project

Figure 2-5
Proposed Gen-Tie Route

Map Extent: Clark County, Nevada

Date: 05-05-15		Author: rnc

I:\Aiya Gen-Tie Project/MXD's/Proposed Gen-Tie Route

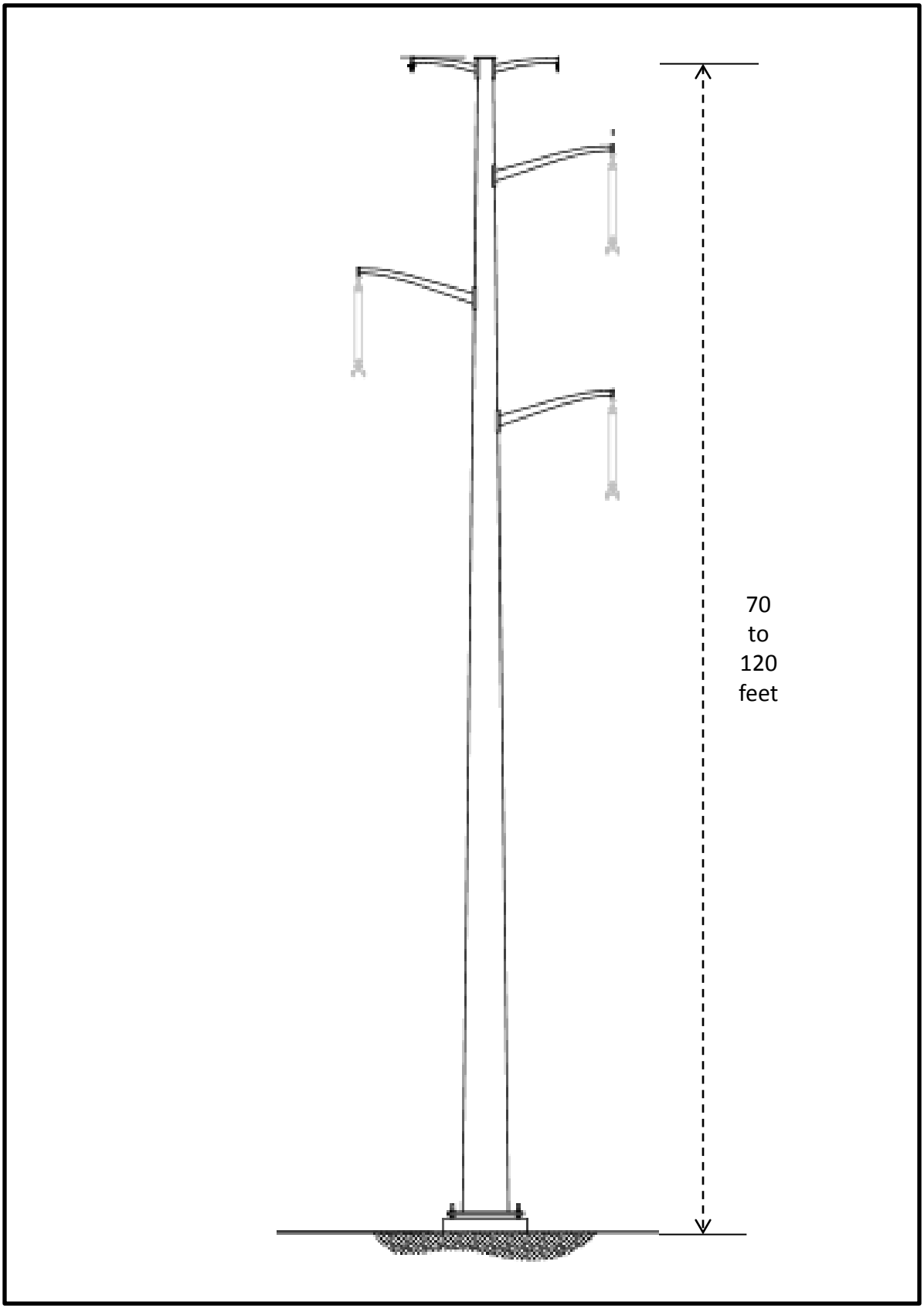

Figure 2-6

Typical 230 kV Single-Circuit Steel Pole Structure

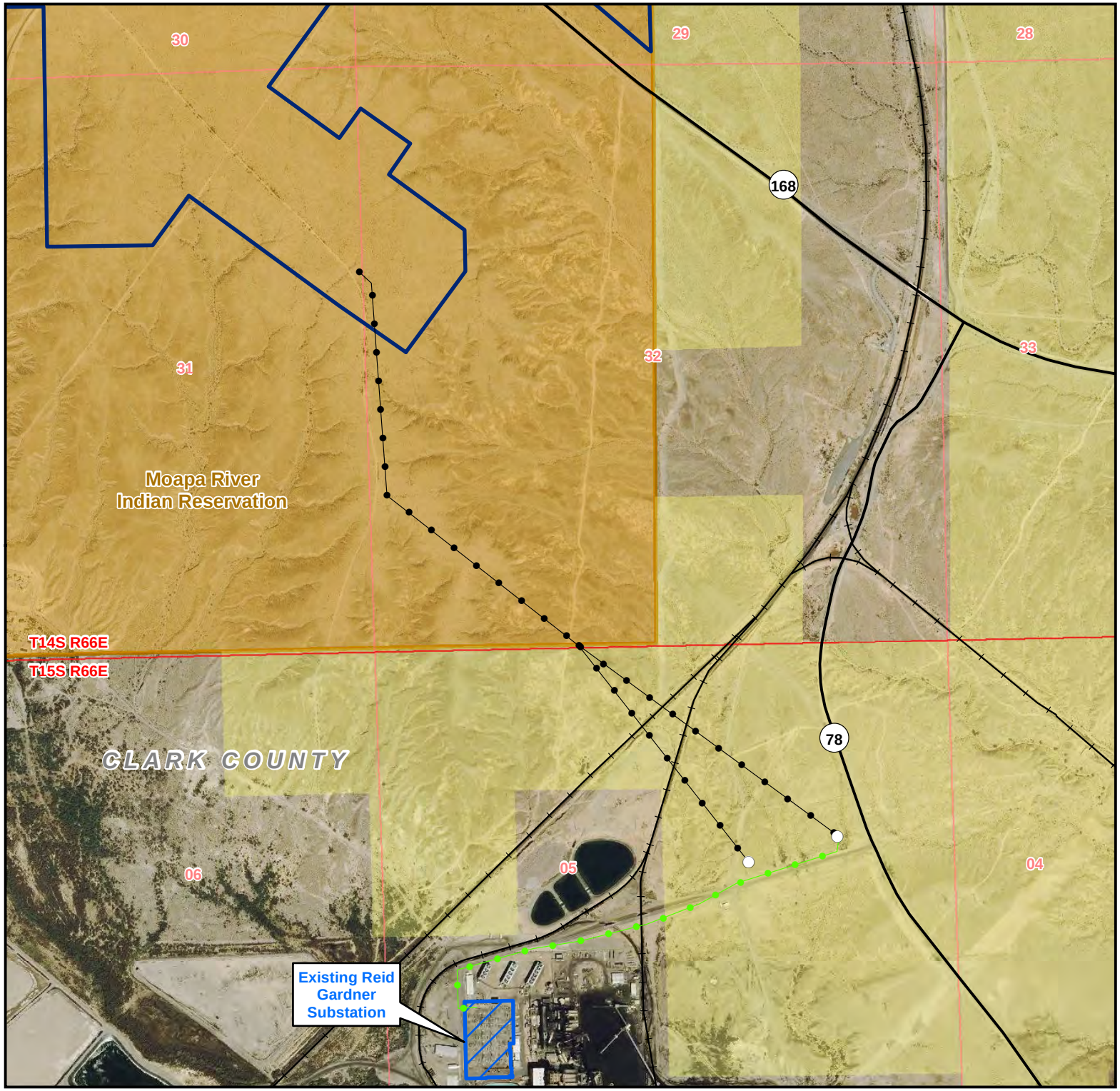

Legend

- Switch Structure
- Gen-Tie Routes
- Double-Circuit Line
- State Highway
- Railroad
- Existing Substation
- Proposed Solar Boundary
- Township/Range Boundary
- PLSS Section Line

Jurisdictional Land Ownership

- Bureau of Land Management Land
- Indian Land

0 500 1,000 1,500
Feet

Universal Transverse Mercator
North American Datum 1983
Zone 11 North, Meters

Aiya Gen-Tie Project

Figure 2-7
Alternative Gen-Tie Route

Map Extent: Clark County, Nevada

Date: 05-05-15		Author: rnc

I:\Aiya Gen-Tie Project/MXD's/Alternative Gen-Tie Route

Chapter 3

Affected Environment

CHAPTER 3
AFFECTED ENVIRONMENT

This chapter describes the physical, biological, social and economic characteristics of the area that would be affected by implementation of the Proposed Project and alternatives. It focuses on current resource conditions as well as environmental trends based on current management. Information from the recent Final EIS for the Moapa Solar Energy Center Project (BIA, 2014) and the Final EIS for the K Road Moapa Solar Facility (BIA, 2012), both similar PV solar projects also located on the Moapa River Indian Reservation is utilized or referenced as appropriate in this DEIS for consistency.

The information in this chapter is based on existing historical reports supplied by the Tribe, BIA, BLM, and Applicant, and field surveys conducted by the Applicant in 2014 and 2015. The data used and the surveys conducted are discussed in the respective resource discussions below. For some resource values, the discussion addresses conditions beyond the Project area to ensure an adequate analysis of off-site and cumulative impacts discussed in Chapter 4, Environmental Consequences.

3.1 Introduction

The Proposed Project will be located in Clark County, Nevada primarily on the Moapa River Indian Reservation with portions of the gen-tie line located on BLM lands and on private lands owned by NV Energy. Clark County covers over 8,091 square miles in southern Nevada and is bounded by Lincoln County, Nevada to the north; Nye County, Nevada to the northwest; the state of Arizona to the east; and the state of California to the southwest. The Colorado River, including the Hoover Dam and Lake Mead, is located to the southeast. Moapa Valley is the prehistoric flood plain of the Muddy River, which flows through the valley and eventually drains into Lake Mead.

The Reservation consists of 71,954 acres of land in the northern part of Clark County located northeast of Las Vegas (**Figure 1-1**). Historically, the Moapa Band of Paiute's primary business enterprise was the Moapa Paiute Travel Plaza located at exit 75 on I-15. The Plaza includes a casino, convenience store, cafe, gas station, and fireworks store. Recently, the Tribe has expanded its economic development program to include solar power generation on the Reservation. A new solar facility (formerly referred to as K Road) is currently being constructed and the Moapa Solar Energy Center has been approved with construction scheduled to start in 2015. These projects are providing and will continue to provide the Tribe with new sources of revenue.

3.2 Climate

The Proposed Project lies within the northeast portion of the Mojave Desert. The Mojave Desert is a transitional desert between the hot Sonoran Desert to the south and the cold Great Basin Desert to the north. The climate of the Mojave Desert is characterized by extreme fluctuations of daily temperatures, strong seasonal winds, and clear skies. Within Clark County, this region of the Mojave Desert exhibits typical subtropical arid climate. During the summer months of June through September, average daytime highs range from 94 to 104 degrees Fahrenheit (°F) (34 to 40 degrees Celsius (°C)) with nighttime lows ranging from 69–78°F (21-26°C) (Western Regional Climate Center 2009). An average of 133 days per year exceed 90°F (32°C) and 72 days exceed 100 °F (38°C). Extreme temperatures occur most often during July and August. Humidity is often under 10 percent. On average, sunny days are recorded 85 percent of the time (Gorelow 2005).There are approximately 300 sunny days per year and annual rainfall is roughly 4.2 inches.

The winter season is generally mild and of shorter duration than summer. Average daytime highs are 60°F (16°C) with nighttime lows around 40°F (4°C). Although temperatures can sometimes drop to freezing, 32°F (0°C), rarely do the nighttime temperatures dip below 30°F. Snowfall occurs in the surrounding mountains, but is rare in the valley. There are no wind data for this area, but data from Las Vegas International Airport (50 miles south) show that winds average 7 miles per hour (mph) (Western Regional Climate Center 2009). Local summer storms during July and August are the source of most summer precipitation, and snow that falls west of the site at higher mountain elevations accounts for most of the winter precipitation.

3.2.1 Climate Change

The USEPA defines climate change as any significant change in measures of climate (such as temperature, precipitation, or wind) lasting for an extended period of time (decades or longer) (EPA 2011). Climate change may be affected by a number of factors including natural cycles (e.g., changes in the sun's intensity or Earth's orbit around the sun); natural processes within the climate system (e.g., changes in ocean circulation); and human activities that change the atmosphere's composition (e.g., burning fossil fuels) or land surface (e.g., deforestation, reforestation, urbanization, and desertification).

Climate change is also the term typically used to describe the impact on the environment from Greenhouse Gas (GHG) emissions. GHGs are gases that trap heat in the atmosphere, causing a greenhouse effect. According to the Intergovernmental Panel on Climate Change, increased atmospheric levels of carbon dioxide (CO_2) are correlated with rising temperatures and concentrations of CO_2 have increased by 31 percent above pre-industrial

levels since 1750. Climate models show that temperatures will probably increase by 1.4 °C to 5.8°C by 2100 (IPCC 2007).

The Intergovernmental Panel on Climate Change (IPCC) concluded in a statement released February 2, 2007, that “the widespread warming of the atmosphere and ocean, together with ice-mass loss, support the conclusion that it is extremely unlikely that global climate change of the past 50 years can be explained without external forcing, and very likely that it is not due to known natural causes alone” (IPCC 2007). Further, a report from the US Global Change Research Program (USGCRP) concludes, that the global warming observed over the past 50 years is due primarily to human-induced emissions of heat-trapping gases (USGCRP 2009).

Deserts have a potential for carbon storage in soils rather than in their vegetation. Some studies have estimated that the desert biome absorbs an amount of carbon comparable to temperate forests and grassland ecosystems (Fenstermaker and Arnone 2008). Even if deserts may generally store less carbon than forests on a carbon/unit area basis, the total amount of carbon that desert soils can store is potentially significant due to the extensive areas of these ecosystems.

3.2.2 Potential Effects of Climate Change

According to the Nevada Climate Change Advisory Committee (NCCAC) Final Report (NCCAC 2008), projected changes in climate would impact public health through: (1) the direct effects of heat and frequent heat waves; (2) exacerbated air pollution due to increased ground level ozone; (3) increases in infectious diseases, such as dengue fever and malaria; or (4) a decrease in general public health due to economic/social changes from climate change.

The NCCAC report indicates additional possible outcomes if greenhouse gases continue to increase in the atmosphere unabated. These include potential effects on water, wildfire, and other resources. The report also provides recommendations for minimizing the effects of climate change including supporting renewable energy development.

According to the EPA, scientists have already observed environmental changes due to climate change including a rise in sea level, shrinking glaciers, changes in the range and distribution of plants and animals, trees blooming earlier, lengthening of growing seasons, ice on rivers and lakes freezing later and breaking up earlier, and thawing of permafrost (EPA 2010). Scientists are also studying how societies and the earth's environment will adapt to or cope with climate change.

In the United States, scientists believe that most areas will continue to warm, although some will likely warm more than others. It remains very difficult to predict which parts of the

country will become wetter or drier, but scientists generally expect increased precipitation and evaporation, and drier soil in the middle parts of the country.

3.2.3 Existing Greenhouse Gas Emissions

According to the Nevada Statewide Greenhouse Gas Inventory and Projections, 1990- 2020 (updated in December 2008) and EPA's Inventory of US Greenhouse Gas Emissions and Sinks: 1990-2010, GHG emissions in Nevada accounted for approximately 38.05 Million Metric Tons (MMT) of gross CO_2 equivalent (CO_2e) emissions in 2010, an amount equal to 0.5 percent of total U.S. gross GHG emissions. Nevada's gross GHG emissions increased approximately 20 percent from 1990 to 2010, while total U.S. GHG emissions rose by only 10.5 percent during this period. Although GHG emissions increased in Nevada during this 20 year period, a peak level was reached in 2005, and GHG emissions then decreased over the next five years.

Electricity generation and transportation were the two sectors responsible for the majority of GHG emissions during the last twenty years both in Nevada and nationally. GHG emissions are expected to increase, to a total of 78.4 MMT CO_2e by 2020, due to increased fossil fuel electricity production. The next largest contributors to emissions are the residential, commercial, and industrial fuel use sectors.

3.2.4 Federal Greenhouse Gas Guidance

The Council on Environmental Quality (CEQ) issued guidance to Federal agencies on February 18, 2010, regarding GHG emissions. The guidance states that in an agency's analysis of direct effects of GHG emissions, it would be appropriate to quantify cumulative emissions over the life of the Proposed Project, discuss measures to reduce emissions, including consideration of reasonable alternatives, and qualitatively discuss the link between such emissions and climate change. On December 18, 2014, the CEQ released revised draft guidance for public comment that describes how federal departments and agencies should consider the effects of greenhouse gas emissions and climate change in their NEPA reviews. The CEQ recommends that if a Proposed Project would be reasonably anticipated to cause direct emissions of 25,000 metric tons or more of CO_2e GHG emissions on an annual basis, agencies should consider this an indicator that a quantitative and qualitative assessment may be meaningful to decision-makers and the public. The guidance also states that it is not currently useful for the NEPA analysis to attempt to link specific climatological changes to a particular project or emissions, as direct linkage is difficult to isolate and to understand.

3.3 Topography, Geology and Geologic Hazards

3.3.1 Topography

The Project Area is located in the Moapa Valley basin in the northeastern portion of the Mojave Desert. It lies within the Basin and Range Region of the southwestern U.S. with topography that is characterized by linear, north and south trending valleys and normal fault-block mountain ranges resulting from extension of the Earth's crust. The climate is typically semi-arid and deserts form in the rain shadows of linear mountain ranges.

3.3.1.1 Land Forms

The mountains which border the Moapa Valley include the Arrow Canyon Range to the west and the Dry Lake Range to the southeast. The Arrow Canyon Range is composed primarily of carbonate rocks of the Bird Spring Formation that are Ordovician to Permian in age. Generally, the local area is covered with a thin layer of locally derived gravelly fine sandy loam that forms a cover of about 12 to 14 inches over calcium carbonate cemented alluvium (caliche). Some of the exposed surface of the elevated or plateau-like portions of the Moapa Valley is also composed of caliche.

Elevations across the general Proposed Project area range from approximately 1,600 feet to 1,825 feet above mean sea level The Proposed Project site is located on a relatively flat plateau about 200 feet above the valley floor. The southern part of the Proposed Project area where the gen-tie line would be built on BLM-administered lands is on the slopes leading down from the plateau to the Muddy River. **Figure 3-1** shows the topography in the Proposed Project area.

3.3.2 Geology

The Proposed Project is located in Quaternary alluvium on the slopes above the Muddy River and the Muddy Creek Formation on the flat areas where the solar site would be located (Longwell, et. al 1965). The alluvium is deposited by flowing water and the Muddy Creek Formation is uncemented sandy cobble conglomerate deposited in wide shifting channels across the floor of a broad basin.

Geotechnical studies on the solar site found that the alluvium consists of silty sand, silty sand with gravel, poorly graded sand with gravel, poorly graded gravel with silt and sand, gravel with sand, and silty gravel with sand. Cobbles and boulders were also encountered. A caliche layer with calcium carbonate cementation was encountered at a depth of approximately 1.5 feet below ground surface. The alluvial deposits range in density from loose to very dense (SCST, 2015).

3.3.2.1 Paleontological Resources

Potential paleontological materials could occur in the Muddy Creek formation but are unlikely to exist in the alluvial deposits that occur on the portions of the Project located on Federal lands. Therefore, the Proposed Project area has low potential for paleontological resources.

3.3.3 Geologic Hazards

3.3.3.1 Seismicity

Much of the Western United States is a region of moderate to intense seismicity related to movement of crustal masses (plate tectonics). By far, the most active regions, outside of Alaska, are in the vicinity of the San Andreas Fault system of western California. Other seismically active areas include the Wasatch Front in Salt Lake City, Utah, which forms the eastern boundary of the Basin and Range physiographic province, and the eastern front of the Sierra Nevada Mountains, which is the western margin of the province. The Proposed Project lies within Moapa Valley in the central portion of the Basin and Range physiographic province which is an area subject to periodic earthquake shaking. The USGS (2007) reports 80 earthquakes of magnitude 4.0 or greater have occurred within 100 miles since 1973. Of these, only 12 were of magnitude 5.0 or greater and none exceeded magnitude 5.6.

The Proposed Project lies within an area with a moderate to high potential for strong earthquake shaking. Seismicity within the area is considered about average for the central Basin and Range Province (Ryall and Douglas 1976). The USGS indicates there is a 40 percent chance of a magnitude 5.0 or greater earthquake in the area within the next 50 years.

3.3.3.2 Faults

The closest mapped fault is the California Wash Fault that forms prominent scarps in Quaternary alluvial fan sediments along the western flank of the Muddy Mountains, approximately 5 miles southeast of the site (USGS 1991). The California Wash Fault is described as a “listric, concave to the west, northeast striking, down to the west normal fault,” which forms the structural separation between bedrock of the Muddy Mountains and Tertiary basin fill within Dry Lake Valley (Anderson 1999). The California Wash Fault has demonstrable Quaternary movement, but possible Holocene movement has yet to be investigated.

The Nevada Earthquake Safety Council (NESC 1998) has developed and adopted the criteria for evaluation of Quaternary age earthquake faults. Holocene Active Faults are defined as those with evidence of movement within the past 10,000 years (Holocene time). Those faults with evidence of displacement during the last 130,000 years are termed Late Quaternary Active Faults. A Quaternary Active Fault is one that has moved within the last 1.6 million years. An Inactive Fault is a fault without recognized activity within Quaternary time (last 1.6 million years). Holocene Active Faults normally require that occupied structures be set back a minimum of 50 feet (100-foot-wide zone) from the ground surface fault trace. An Occupied Structure is considered a building, as defined by the International Building Code, which is expected to have a human occupancy rate of more than 2,000 hours per year.

Recurrence intervals for Nevada earthquakes along faults that have been studied are estimated to be in the range of 6,000 to 18,000 years in western Nevada (Bell 1984). The very active eastern boundary faults of the Sierra Nevada Mountains may have a shorter recurrence interval of 1,000 to 2,000 years. Many of the smaller faults may be the result of one-time events in response to movement along a better developed and more active fault system a considerable distance away.

Based on the geologic map, the California Wash Fault, approximately 5 miles southeast of the site, is considered to be Quaternary Active. The set back from Quaternary Active Faults is left to the judgment of the geologist/engineer; however, no Critical Facility should be placed over the trace of a Late Quaternary Active Fault. A Critical Facility is defined as a building or structure that is considered critical to the function of the community or the project under consideration. Examples include, but are not limited to, hospitals, fire stations, emergency management operations centers and schools. Since no faults are mapped as crossing the site and none were suggested by the geotechnical investigation, setbacks for the Proposed Project structures from known faults would be adequate.

3.3.3.3 Ground Motion and Liquefaction

Mapping by the USGS (2007) indicates that there is a 2 percent probability that a bedrock ground acceleration resulting in very strong perceived shaking will be exceeded in any 50-year interval. Only localized amplification of ground motion would be expected during an earthquake. Because the site area is underlain by dense to very dense caliche soils and bedrock, liquefaction potential is negligible at the site (K Road EIS 2012).

3.4 Soils

Typical of soils in arid environments, local soils are poorly developed and shallow, almost completely absent in some areas. In general, the local soils are typically only inches deep and rarely more than 18 inches in depth over an underlying caliche layer.

The solar site contains two soil series - the Bard series which covers approximately 90 percent and Badlands that makes up the remaining 10 percent (USDA NRCS 2006). Soils where the proposed transmission line corridors would be located include the same two soil types but are nearly all the Badlands soil type (**Figure 3-2**).

3.4.1 Soil Series Descriptions

The U.S. Department of Agriculture (USDA) Natural Resources Conservation Service (NRCS) soil survey maps (USDA NRCS 2006) were used to determine the soil information for the proposed Project area. Engineering properties of the soils can be found in **Table 3-1**.

3.4.1.1 Bard Series (BHC)

The Bard series covers nearly all the solar site. It consists of shallow, well-drained soils over cemented material that formed in alluvium derived predominantly from limestone and dolomite with some sandstone and quartzite. The Bard soils are on dissected valley fill terraces, alluvial fans and fan remnants. Slope ranges from 2 to 8 percent. The vegetation is mainly creosotebush, white bursage, annual buckwheat, cholla, and other cacti.

TABLE 3-1
SOIL SERIES ENGINEERING PROPERTIES

Soil Series	Moist Bulk Density (g/cc)	Saturated Hydraulic Conductivity (um/sec)	Available water Capacity (In/in)	Erosion Factors			Wind Erodibility Group	Surface Runoff	Risk of Corrosion	
				Kw	Kf	T			Uncoated Steel	Concrete
Bard (BHC)	1.30-1.75	4-705	.03-.13	.43	.49	5	6	Very High	Moderate	Moderate
Badlands (BD)	na	na	na	na	na	na	na	Very High	High	High

Source: NRCS 2012. Available at http://soildatamart.nrcs.usda.gov/Report.aspx?Survey=NV608&UseState=NV. Accessed 3/9/2013.
n/a = not available

3.4.1.2 Badlands (BD)

The Badland series consists of severely eroded and gullied soils located on sideslopes of the mesa where portions of the gen-tie would be located. It is made of exposures of the Muddy Creek Formation. The Formation consists of highly stratified sand, silt, and clay that

contain a large amount of gypsum and calcium carbonate. Slopes are commonly 15 to 50 percent, but can be as much as 100 percent in some areas. Run-off is very rapid, and the hazard of water erosion is very high. This unit generally is eroded and barren of vegetation.

3.5 Water Resources

The Proposed Project lies in a northeastern portion of the Mojave Desert in the Moapa Valley. It is within the Lower Meadow Valley Wash and California Wash groundwater basins within the Colorado River watershed (NDWR 2014). The Arrow Valley Range lies to the west and the North Muddy Mountains lie to the south. The project lies between Meadow Valley Wash and the Muddy River, approximately 4 miles west of their confluence. The solar field area has relatively little relief with elevations ranging from 1,750 to 1,825 feet above mean sea level.

3.5.1 Surface Water

The proposed solar Project is located on relatively flat topography and is topographically isolated having limited drainage entering the area from off-site. The site is at or above the headwaters of the small ephemeral drainages in the area. **Figure 3-1 and Figure 3-3** shows the topographic position of the site.

The site drains via ephemeral waterways in various directions to the surrounding areas. Most of the site drains to the east and southeast. A field investigation performed in September 2014 identified 29 ephemeral drainages within the Proposed Project area including the 900-acre lease area where the solar project would be sited and along the gen-tie route alternatives (Heritage 2015). The ephemeral drainages all drain into the Muddy River located south and east of the Proposed Project site.

A preliminary hydrology study was conducted for the Project to determine flow paths and flow volumes onto and from the site (Louis Berger 2015). Drainage sub-basins were delineated to determine peak flows at various points within the area. A total of 30 sub-basins were delineated for the hydrologic model as shown in **Figure 3-4**. These sub-basins were grouped together to create multiple drainage areas described below:

- Drainage Areas 1, 2, and 3 - Contribute to existing washes draining to the east under the Union Pacific Railroad (UPRR)
- Drainage Area 4 - Contributes to existing washes draining to the southeast under the UPRR
- Drainage Area 5, 6, and 7 - Contributes to existing washes draining to the west and south, eventually also flowing under the UPRR

As indicated above, all flow leaving the site, flows under the UPRR. The flow leaving the eastern portion of the site passes under the Union Pacific Railroad (UPRR) located about 0.4 miles east of the site. This water flows through a large culvert under the UPRR and continues through another culvert under Meadow Valley Wash Road. The areas draining to the southeast and south also eventually pass under the UPRR through several other culverts.

The Proposed Project site is not within the Federal Emergency Management Agency (FEMA) 100-year floodplain. The proposed solar site lies within Zone D, an area in which flood hazards are undetermined, but possible (FEMA 2002a; FEMA 2002b). The gen-tie and the water pipeline extend into flood hazard mapped areas as they approach the Muddy River, with the intake for the water pipeline located on the river at an elevation of approximately 1,600 feet. These features lie within Zone X - Other Areas that are determined to be outside the 0.2 % annual chance floodplain (FEMA 2002a). Portions of the gen-tie also cross an area of Zone AE which is within the 100-year floodplain (FEMA 2002a). **Figure 3-5** shows ephemeral drainages and 100-year floodplains.

A high-intensity rain event in the area occurred on September 8, 2014. This event, which originated from the remnants of Hurricane Norbert, caused rainfall that exceeded four inches in parts of the Moapa Valley in a period of two hours (Usufzy and Visconti 2014) and may have exceeded six inches over 12 hours in some parts of the valley (Paddock et al. 2015). In contrast, normal annual precipitation in the Moapa Valley is four to six inches (Paddock et al 2015). Interstate 15 east of Glendale, approximately five miles southeast of the project site, was washed out and a section of Highway 168 was also washed out near its intersection with I-15 about 3.5 miles southeast of the Project area. These are areas where large washes are located. As mentioned above, the culverts under the UPRR control the flows west of the UPRR (including the site and the area around it) that could reach the impacted roads during a storm event.

The Proposed Project does not contain or drain to a wild and scenic river (Interagency Wild and Scenic Rivers Council 2015).

3.5.1.1 Surface Water Quality

The EPA regulates water quality on Tribal lands under Section 401 of the Clean Water Act (CWA). Additionally, Section 303(d) of the CWA requires the Nevada Department of Environmental Protection (NDEP) to develop a list of impaired waterbodies needing additional work beyond existing controls to achieve or maintain water quality standards. The NDEP has furthermore set water quality standards contained in the Nevada Administrative Code (NAC) 445A defining the water quality goals for important water bodies by designating uses of the water and by setting criteria necessary to protect beneficial uses and prevent

degradation. However, based on tribal sovereignty, state water quality standards are not applicable on Tribal lands.

There are no perennial waterbodies within the solar site or along the routes for the gen-tie or water pipeline. Consequently, there is no surface water quality data available for the Proposed Project area. Ephemeral drainages leaving the Proposed Project area are tributaries to the Muddy River, a perennial water. The Muddy River is fed by springs connected to the regional groundwater system. It is considered impaired, and is on Nevada's 303(d) list for exceeding state water quality standards (NDEP 2014). For the Muddy River, NDEP developed site-specific numeric standards for pH, dissolved oxygen, maximum temperature, phosphorous, nitrite, nitrate, turbidity, total dissolved solids, color, and *E. coli* to protect the designated beneficial uses and to maintain existing water quality. In the segment adjacent to the Proposed Project Area (Waterbody ID NV13-CL-11_02) between the Warm Springs Bridge to Glendale, the Muddy River fully supports watering of livestock, recreation involving and not involving contact with water, industrial supply, municipal or domestic supply, and propagation of wildlife. It does not support irrigation and aquatic life (NDEP 2014).

The entire flow of the Muddy River is derived from the discharge from the regional carbonate aquifer, except during infrequent precipitation events that increase river flows for up to a few days. Historic flow records indicate that about 51 cubic feet per second (cfs) of groundwater discharge sustain the spring and river flows (Mifflin 2001). Currently, consumptive uses related to natural evapotranspiration, surface-water diversions, and groundwater diversions reduce the Muddy River flows to about 25,000 (acre-feet per year (AFY) (35 cfs) at the Warm Springs Road gaging station, located about 3 kilometers downstream of the spring area. Thus, about 32 percent (12,000 AFY) of the regional flux to the area is consumptively removed from the system above the gage. Of this, about 3,600 AFY, or 25 percent, is estimated to be lost by evapotranspiration from the well-vegetated areas of the headwater channels and springs, and the rest is removed through pipelines by Moapa Valley Water District (MVWD) and Nevada Energy Company (NV Energy) for use elsewhere.

The Muddy River Recovery Implementation Program is a coordinated, multi-agency effort to protect the species and habitat of the Muddy River, while ensuring the responsible management of water resources in the Muddy River and Coyote Spring Valley (SNWA 2015).

3.5.2 Ground Water

The Project Area lies within a large expanse of tuffaceous sedimentary rock of the late Eocene to late Miocene and Quaternary alluvial deposits (USGS 2015a). Fracture zones and associated solution cavities within these carbonate rocks provide highly transmissive aquifers where they are saturated and such transmissive zones can be continuous over

large areas independent of surface topographic basins and ranges. Regional groundwater flow is the result of these large-scale groundwater interconnections and is readily demonstrated by uniformity of temperature and discharge at associated springs and by homogeneous chemical characteristics (Mifflin 1968).

Many of the carbonate aquifers throughout the general region are believed to be associated with groundwater flow systems that discharge at large springs. Locally, alluvial aquifers inset into the Muddy Creek Formation occur in the basin along the Muddy River and lower Meadow Valley Wash. Alluvial gravels in upper Moapa Valley extend from about 2 miles northwest of the Muddy River springs area to the Glendale area, where they are joined by similar alluvial gravels associated with lower Meadow Valley Wash. The alluvial gravels attain thicknesses of about 100 feet beneath the narrow floodplains of these two drainages.

The relationship between the carbonate aquifer and the alluvial gravels further complicates the hydrology in the Muddy River springs area. The Muddy Creek Formation generally separates these aquifers, but locally it can be missing or conduits provide a direct connection from the carbonate aquifer to the gravels. The gravel aquifer is recharged by the carbonate aquifer about 3 kilometers up-gradient from the Muddy River springs, where the alluvial aquifer discharges as base flow in the headwater channels of the Muddy River. In this same general area, several large springs issue directly from the carbonate aquifer with outflow channels to the Muddy River.

The USGS maintains a groundwater monitoring well approximately seven miles northwest of the project location. This well has been monitored since 1985, and depth to groundwater has been trending deeper, from 390 to 396 feet below land surface during this time period (USGS 2015b).

3.5.2.1 Ground Water Quality

Groundwater quality in the hydrologic basins of the Mojave Desert in California and Nevada is generally acceptable for most uses of groundwater. However, since many of the basin-fill aquifers have closed surface drainage and limited inter-basin flow, aquifers may contain poor quality, saline waters, elements from natural geothermal activity, and/or contaminants from mining or energy operations.

3.5.3 Water Rights

The Tribe was issued a 2,500 AFY groundwater right in 1989 by the State Engineer and in a Memorandum of Agreement with Southern Nevada Water Authority and other parties in April 2006 (Moapa Paiute Water Settlement Agreement 2006). It is also has 3,700 AFY of surface water rights from Muddy River.

The Tribe's surface water rights are associated with a 99-year lease from the Moapa Valley Water District (MVWD), which was executed in 2006 pursuant to and in connection with the Moapa Paiute Water Settlement Agreement (MVWD Lease). The MVWD Lease provides the Tribe the right to use surface water from the Muddy River up to a maximum consumptive use of 3,700 AFY. The point of diversion, unless changed by the Nevada State Engineer pursuant to an application, would be at existing points within the Tribe's Reservation.

The Tribe's water rights are permitted for municipal, domestic, and irrigation uses. Normally in order to use Nevada State water rights for an energy project, the permitted use must be industrial. Nevertheless, because the Tribe is a sovereign government, it can act as a municipality and provide water throughout the Reservation much like a water district. The Project will need to apply for a Change of Manner of Use and Place of Use permit prior to start of construction with the State Engineer's Office.

3.5.4 Jurisdictional Waters, Drainages, and Riparian Areas

The Proposed Project does not contain or drain to a wild and scenic river. The only perennial waterbody affected by the project will be the Muddy River where the water intake used to provide temporary water during construction would be located.

Twenty-nine ephemeral drainages were identified within the approximately 900-acre potential lease area for the solar field within which the solar project would be located and along the proposed gen-tie route associated with the Proposed Project area. All of these drainages drain into the Muddy River south of the Project site. Ordinary high water mark (OHWM) determinations were based on A Field Guide to the Identification of the Ordinary High Water Mark (OHWM) in the Arid West Region of the Western United States – A Delineation Manual (USACE 2008). No surface water was observed at the time of investigation and these drainages appear to flow only in response to storm events. Drainage morphology ranges from 2-foot-wide single channels to features up to 30 feet wide (bank to bank). Several drainages lost identifiable flowpath organization as they went downslope. Only a small portion of these drainages were considered to be jurisdictional waters of the US in accordance with USACE methodology. The full drainage survey report can be found in **Appendix F**.

The survey did not locate any Traditionally Navigable Waters (TNWs), Relatively Permanent Waters (RPWs), wetlands, or riparian vegetation within the Project area - only non-RPWs were identified. The Muddy River, to which all project-area drainages flow, is a RPW. As such, several of the drainages leaving the project area could be regulated by the US Army Corps of Engineers (USACE) for compliance with the CWA. Other features, such as erosional gullies and swales, would not be regulated by the USACE. These determinations are reflected in the jurisdictional waters report in **Appendix F**.

3.6 Air Quality

This section identifies existing air quality within and adjacent to the Proposed Project and the air quality standards that apply to the Project area.

3.6.1 Existing Ambient Air Quality

Ambient air quality is primarily a result of the type and amount of pollutants emitted into the atmosphere, the size and topography of the air basin, and the regional meteorological conditions. Degraded air quality in Clark County results from both localized industrial developments throughout the County, vehicle emissions from the local population, and fugitive dust from exposed areas, in addition to air pollution transported from the west coast.

Clark County is divided into separate airshed regions synonymous with hydrographic areas (HAs). Hydrographic areas represent natural and man-made stream drainage areas or basins. The Proposed Project is located within two HAs. North of Highway 168 lies within HA 205 (Lower Meadow Valley Wash) while south of the highway lies within HA 218 (California Wash) (NDWR 2014). However the County does not regulate air quality on the Reservation. The EPA regulates air quality on Tribal lands and the County regulates air quality off the Reservation.

Attainment areas are those areas meeting state and Federal air quality standards. Non-attainment areas do not meet the state and Federal air quality standards. Clark County is classified as Unclassifiable/Attainment for Particulate Matter 10 microns or less (PM_{10}), Particulate Matter 2.5 microns or less ($PM_{2.5}$), carbon monoxide (CO), and lead (Pb). EPA has recently redesignated Clark County as in attainment for Ozone (O_3), including HA 218 (the southern portion of the project area), formerly a non-attainment area. The County is categorized as “cannot be classified or better than nation standards” for nitrogen dioxide (NO_2) (2010 1-Hour Standard), and “better than national standards” for sulfur dioxide (SO_2) (Clark County 2015a). In summary, the Proposed Project area is in attainment for all six criteria pollutants except ozone. However, the ozone unclassifiable/attainment area for HA 218 excludes the Moapa River Indian Reservation and thus does not include the project site (Clark County 2015a).

3.6.1.1 Significance Thresholds

Pursuant to the Federal Clean Air Act of 1970, the EPA has established National Ambient Air Quality Standards (NAAQS) for six criteria pollutants: O_3, $PM_{2.5}$ and PM_{10}, CO, NO_2, SO_2, and Pb (USEPA 2011).

The NDEP, Bureau of Air Quality has air quality statutes that require the use of reasonably available methods to prevent, reduce or control air pollution throughout Nevada. Nevada has its own State Ambient Air Quality Standards (SAAQS), which are similar to the NAAQS but with some differences (NAC 445B.22097). The current State of Nevada and Federal ambient air quality standards and background concentration levels are shown on **Table 3-2**.

The Clark County Department of Air Quality and Environmental Management (DAQEM) is responsible for monitoring air and developing and monitoring control measures. DAQEM regulates all stationary and non-vehicular sources including construction sources, of fugitive dust. According to Section 17 of Clark County's Air Quality Regulations, a plan-specific permit is required for construction activities involving surface disturbances greater than 0.25 acre such as grading and trenching. This permit would apply to Project actions on BLM and private lands and would include conditions requiring control of fugitive dust emissions.

DAQEM uses the national ambient air quality standards to determine the potential impacts of a Proposed Project. Additional requirements for both construction and operation are in place to manage emissions of fugitive dust (including the subsets of PM_{10} and $PM_{2.5}$). Any approved construction or new significant source of stationary (point) air pollution in Clark County would be required by DAQEM to adhere to the prescribed best management practices (BMPs) and control measures in order to minimize dust emissions and control engine exhaust emissions. As the emissions of greatest concern in the area, ozone and particulate matter are discussed below.

Ozone (O_3)

EPA made the determination that Clark County, excluding the Moapa River Indian Reservation, is in attainment or unclassifiable/attainment with the 1997 Ozone NAAQS in December 2012. The EPA also approved Clark County's Ozone Redesignation Request and Maintenance Plan to maintain compliance with the standard through 2022 (EPA 2013).

Particulate Matter (PM_{10})

The Las Vegas Valley (HA 212) within Clark County was classified serious nonattainment for PM_{10}. DAQ submitted a State Implementation Plan (SIP), which explained how the area will attain the NAAQS for PM_{10}. EPA made the determination that the Las Vegas Valley is in attainment with the PM_{10} NAAQS in 2010 (75 FR 45485), and redesignated the area to attainment upon approval of the pending maintenance plan and request for redesignation. In September 2014, the EPA approved a revision to the Nevada SIP that provides for the maintenance of the national ambient air quality standard for PM_{10} (USEPA 2014). The EPA also approved Clark County's plan to maintain compliance with the standard through 2023.

TABLE 3-2
STATE AND FEDERAL AMBIENT AIR QUALITY STANDARDS AND 2014 BACKGROUND CONCENTRATION LEVELS

Pollutant	Averaging Time	Nevada Standards	Federal Standards (NAAQS)	Background Concentration Level	
				Concentration	Measurement Location[a]
CO	8-Hour 1	9 ppm	9 ppm	0.417 ppm	JD Smith
	1-Hour 1	35 ppm	35 ppm	NA[b]	NA
Pb	Rolling3-month average	1.5 µg/m^3	0.15 µg/m^3	NA	NA
NO_2	Annual	53 ppb	53 ppb	13.2 ppb	JD Smith
	1-Hour 4	NA	100 ppb	NA	NA
PM_{10}	Annual	50 µg/m^3	NA	27.61 µg/m^3	JD Smith
	24-Hour	150 µg/m^3	150 µg/m^3	NA	NA
$PM_{2.5}$	Annual	NA	12µg/m^3	10.12 µg/m^3	JD Smith
	24-Hour	NA	15 µg/m^3	NA	NA
O_3	8-Hour	0.075 ppm	0.075 ppm	0.027 ppm	JD Smith
	1-Hour (Lake Tahoe Basin #90)	0.10 ppm	NA	NA	NA
SO_2	Annual	0.030 ppm	NA	0.0014 ppm	Jerome Mack
	24-Hour	0.14 ppm	NA	NA	NA
	3-Hour	0.5 ppm	NA	NA	NA
	1-Hour	NA	75 ppb	NA	NA

[a] The Apex monitoring site (EPA site 32-003-0022) is the closest station to the project area but was deactivated in October 2014 with incomplete data for that year. The next nearest site, JD Smith (EPA site 32-003-2002) is approximately 40 miles southwest of the project site. The JD Smith site does not collect SO2 data, so the Jerome Mack site (EPA site 32-003-0540), approximately 45 miles southwest of the site, was use for that parameter. Data presented here is the 2014 annual average.
[b] NA = not applicable or not available.
Sources: USEPA 2011, Clark County 2014.

Infrastructure SIP

The Federal Clean Air Act (CAA) requires the County to prepare Infrastructure SIPs (I-SIP) every time EPA promulgates a new, or revises an existing NAAQS. The purpose of the I-SIP is to demonstrate Clark County has the programs in place to implement, maintain, and enforce the NAAQS. The O_3 NAAQS was revised in 2008 and the I-SIP was submitted to NDEP in February 2013 for inclusion as a revision to the NV SIP. The NO_2 NAAQS was revised in 2010 and the I-SIP was submitted to NDEP on December 11, 2012 for inclusion as a revision to the NV SIP. The Pb NAAQS was revised in 2008 and the I-SIP was submitted to NDEP on July 13, 2012 for inclusion as a revision to the NV SIP.

3.6.2 General Federal Actions

The General Conformity Rule requires Federal agencies to ensure that their actions (including permitting of projects) conform to the applicable SIP. Given that the Proposed Project takes place almost entirely on Reservation land, the applicable SIP may only apply to that portion of the Proposed Project on BLM lands. The EPA has full authority over new sources constructed on Tribal lands. 40 CFR 49 and 51 “Review of New Sources and Modifications in Indian Country” provides a formal mechanism for requiring permitting of stationary sources throughout Indian Country. A discussion and summary of regulated air pollutant emissions from the Proposed Project is included in Section 4.6 of this EIS.

DAQEM conducts monitoring of regulated criteria air pollutants by utilizing ambient air quality measurements in an established air monitoring system located throughout Clark County. There are no monitors in the immediate vicinity of the Proposed Project.

3.6.3 Existing Sources of Air Pollutants

Air quality in a given area is affected by industrial, mobile sources (cars, trucks, buses, construction equipment, RVs, off-road vehicles, and lawn or garden equipment), agricultural, and commercial activities. The Proposed Project area is indirectly affected by these activities when air pollutants are transported via meteorological conditions. For example, CO occurs on calm cold days in the lowest elevations and ozone occurs on hot sunny days at higher elevations.

Two sources that can cause local air quality problems are windblown fugitive dust and mobile impacts from on-road and non-road vehicles. Windblown fugitive dust is a widespread issue in the arid and semi-arid regions of Clark County. Following disturbance by construction, industrial, agricultural, and/or recreational activities, desert lands are subject to wind-driven emissions of fugitive dust. Soil-derived particles can obstruct visibility, cause property damage, and/or contribute to violations of air quality standards for fine particles.

Non-road mobile sources are a subset of the area source category. They include trains, off-highway equipment including large earth-moving and construction equipment. On-road mobile sources consist of automobiles, trucks, motorcycles, and other motor vehicles traveling on roadways.

Existing sources of air pollutants in the Proposed Project area include fugitive dust and mobile sources associated with State Highway 168 and Reservation Road. In addition, the Reid Gardner coal fired Generating Station, which produces fly ash, fossil fuel combustion pollutants, and emissions, is located approximately one mile south of the project area on the

banks of the Muddy River. This generating station is in the process of being decommissioned. The Harry Allen gas-fired Generating Station is approximately 22 miles south of the project site.

3.7 Noise

Noise is generally defined as unwanted or objectionable sound. Human response to noise is subjective and can vary greatly from person to person. Factors that can influence individual response include the loudness, frequency, and time pattern; the amount of background noise present before an intruding noise; and the nature of the activity (e.g., sleeping) that the noise affects.

The sensitivity of the human ear to sounds of different frequencies is measured by the A-weighted decibel scale (dBA). The smallest change in noise level that a human ear can perceive is about 3-dBA. Increases of 5-dBA or more are clearly noticeable. A 10-dBA change in noise levels is judged by most people as a doubling of sound level, while a 20-dBA change is considered a dramatic change in loudness. Normal conversation ranges between 44- and 65-dBA when the people speaking are 3 to 6 feet apart.

Table 3-3 shows sound levels for some common noise sources and compares their relative loudness to that of an 80-dBA source such as a garbage disposal or food blender. Noise levels in a quiet rural area at night are typically between 32 and 35 dBA. Quiet urban nighttime noise levels range from 40 to 50 dBA. Noise levels during the day in a noisy urban area are frequently as high as 70 to 80 dBA.

An individual's sound exposure is based on a measurement of the noise that the individual experiences over a specified time interval. A sound level is a measurement of noise that occurs during a specified period of time. A continuous source of noise is rare for long periods of time and is typically not a characteristic of community noise. Community noise refers to outdoor noise in the vicinity of a community and most commonly originates from transportation vehicles or stationary mechanical equipment.

A community noise environment varies continuously over time with respect to the contributing sources. Within a community, ambient noise levels gradually change throughout a typical day and the changes can be correlated to the increase and decrease of transportation noise or to the daytime/nighttime operation of stationary mechanical equipment. The variation in community noise throughout a day is also due to the addition of short-duration, single-event noise sources, such as aircraft and sirens, as well as various natural sources.

TABLE 3-3 SOUND LEVELS AND RELATIVE LOUDNESS OF TYPICAL NOISE SOURCES			
Noise Source or Activity	**Sound Level (dBA)**	**Subjective Impression**	**Relative Loudness (human judgment of different sound levels)**
Jet aircraft takeoff from carrier (50 ft)	140	Threshold of pain	64 times as loud
Loud rock concert near stage, Jet takeoff (200 ft)	120	Uncomfortably loud	16 times as loud
Jet flyover(1,000 ft)	100	Very Loud	4 times as loud
Heavy truck or motorcycle (25 ft)	90		2 times as loud
Garbage disposal, food blender (2 ft), Pneumatic drill (50 ft)	80	Moderately Loud	Reference loudness
Vacuum cleaner (10 ft), Passenger car at 65 mph (25 ft)	70		½ as loud
Large store air-conditioning unit (20 ft)	60		1/4 as loud
Light auto traffic	50	Quiet	1/8 as loud
Bedroom or quiet living room, Bird calls	40		
Quiet library	30	Very quiet	
Quiet Rural Nighttime	20		
Acoustic Test Chamber	10	Just audible	
Lowest threshold of Hearing	0	Threshold of hearing	

Source: Beranek (1988) and EPA (1971) Caltrans Technical Noise Supplement, October 1998

The metrics for evaluating the community noise environment are based on measurements of the noise exposure over a period of time in order to characterize and evaluate the cumulative noise impacts. These metrics are time varying and are defined as statistical noise descriptors. The most common metrics for evaluating community noise are as follows:

- L_{eq}: The equivalent sound level, or the time-integrated continuous sound level, that represents the same sound energy as the varying sound levels, logarithmically averaged over a specified monitoring period.
- L_{max}: The instantaneous greatest noise level measured on a sound level meter during a designated time interval.
- L_{min}: The instantaneous lowest noise level measured on a sound level meter during a designated time interval.
- L_x: The base sound level that is exceeded x percent during a specified time.

- DNL: The Day-Night Average Sound Level (abbreviated as Ldn) that represents a 24 hour, A-weighted sound level average from midnight to midnight, where sound levels during the nighttime hours of 10:00 PM to 7:00 AM have an added 10 dB weighting, but no added weighting on the evening hours (7:00 PM to 10:00 PM).
- CNEL: The Community Noise Equivalent Level that represents a 24-hour A-weighted sound level average conducted from midnight to midnight, where sound levels during the evening hours of 7:00 PM to 10:00 PM have an added 5 dB weighting, and nighttime hours of 10:00 PM to 7:00 AM have an added 10 dB weighting.

3.7.1 Existing Noise Conditions

The Proposed Project area is mostly undeveloped and its overall character is considered rural. Noise sources around the Proposed Project include road traffic (Highway 168, Reservation Road), railroad traffic (Union Pacific Railroad), and industrial activities (Reid-Gardner Generating Station). On the basis of the rural nature of the area and low population density, the day–night average noise level (Ldn or DNL) is estimated to be within the range of 33 to 47 dBA Ldn typical of a rural area (Eldred 1982; Miller 2002).

The nearest residential and other community receptors are located in the tribal community about 0.25 to 0.65 miles south and west of the solar site. These are the primary identified human sensitive receptors within the vicinity of the Proposed Project. Sensitive receptors are defined as any residential dwelling, hotel, health building, educational establishment, place of worship, or any facility or area requiring the absence of noise at nuisance levels (EPA 2006).

Noise measurements and analyses were conducted for the K Road Solar Project in 2011. Measurements (Ldn, A-weighted) of the existing ambient noise levels indicated an Ldn of 54.4 dBA and a 24 hour Leq of 50.4 dBA. The proposed Project site is located a similar distance away from some major existing noise sources (interstate highway, rail) and closer to others such as the state highway and existing Power plant. As a result, it can be assumed that overall existing noise levels in the Project area would likely be higher than those identified for the K Road Solar Project area.

3.7.1.1 Regulatory Framework

Neither the State of Nevada nor Clark County has established quantitative noise limit regulations that would be applicable to solar energy development. In addition, there are no Federal, state, or local laws or regulations directly regulating offsite (community) noise impact receptors on Tribal lands. However, the Tribe's Law and Order Code makes it a crime for a person to maintain a public nuisance, including the interference with the enjoyment of property by willfully or negligently permitting hazardous, unsightly or unhealthy

conditions to exist on property under his possession or control. The BLM does not have noise regulations or standards.

The EPA (EPA 1974) has developed and published criteria for environmental noise levels with a directive to protect public health and welfare with an adequate margin of safety. The EPA criteria (Information on Levels of Environmental Noise Requisite to Protect Public Health and Welfare with an Adequate Margin of Safety) were developed to be used as an acceptable guideline when no other local, county, or state standard has been established. However, the EPA criteria are not meant to substitute for agency regulations or standards in place by states or localities.

According to the EPA guidelines, an Ldn of 45 dBA indoors and 55 dBA outdoors for residential areas in a rural setting is identified as the maximum allowable noise level for which no effects on public health and welfare occur due to interference with speech or other activities. These levels would also protect the vast majority of the population under most conditions against annoyance, in the absence of intrusive noises with particularly aversive content. **Table 3-4** was published by the EPA and summarizes the maximum allowable noise level for specified areas.

TABLE 3-4
SUMMARY OF NOISE LEVELS IDENTIFIED AS REQUISITE TO PROTECT PUBLIC HEALTH AND WELFARE WITH AN ADEQUATE MARGIN OF SAFETY

Effect	Level	Area
Hearing loss	Leq(24) =< 70 dB	All areas
Outdoor activity interference and annoyance	Ldn =< 55 dB	Outdoors in residential areas and farms and other outdoor areas where people spend widely varying amounts of time other places in which quiet is a basis for use
	Leq(24) =< 55 dB	Outdoor areas where people spend limited amounts of time, such as school yards, playgrounds, etc.
Indoor activity interference and annoyance	Ldn =< 45 dB	Indoor residential areas
	Leq(24) =< 45 dB	Other indoor areas with human activities such as schools, etc.

Source: EPA, 1974

The Proposed Project will be governed by Federal OSHA hearing conservation noise exposure regulations. These regulations are designed to protect workers against the effects of noise exposure, and list permissible noise level exposure as a function of the amount of time to which a worker is exposed. The Federal OSHA Occupational Noise Exposure standard states that when employees are subjected to sound exceeding those listed in

Table 3-5, feasible administrative or engineering controls shall be utilized. If such controls fail to reduce sound levels within the levels of **Table 3-5**, personal protective equipment shall be provided and used to reduce sound levels within the levels of the table.

TABLE 3-5
OSHA PERMISSIBLE NOISE EXPOSURES

Duration per day, hours	Sound level dBA slow response[1]
8	90
6	92
4	95
3	97
2	100
1 ½	102
1	105
½	110
¼ or less	115

Source: OSHA, 2007 -29CFR Subpart H – Section 1910.95
Footnote[1]When the daily noise exposure is composed of two or more periods of noise exposure of different levels, their combined effect should be considered, rather than the individual effect of each. If the sum of the following fractions: C(1)/T(1) + C(2)/T(2) C(n)/T(n) exceeds unity, then the mixed exposure should be considered to exceed the limit value. Cn indicates the total time of exposure at a specified noise level, and Tn indicates the total time of exposure permitted at that level. Exposure to impulsive or impact noise should not exceed 140 dB peak sound pressure level.

3.8 Biological Resources

Information on biological resources for the Proposed Project was gathered through literature review and field surveys. Field surveys were conducted for vegetation communities in February 2015, avian habitat in September 2014, desert tortoises (*Gopherus agassizii*) in May and October 2014 (Newfields 2015a), Gila monsters (*Heloderma suspectum*), burrowing owls (*Athene cunicularia*), and golden eagle (*Aquila chrysaetos*) in January 2015 (Newfields 2015b). Data reviews were conducted by assessing current regional scientific literature and accessing public biological databases and resources: Nevada Department of Wildlife (NDOW) Diversity GIS Data, National Park Service (NPS), U.S. Fish and Wildlife Service (USFWS), USGS topographic maps, Nevada Natural Heritage Program (NNHP) database, and aerial imagery as well as review of existing reports and studies that were conducted for similar projects at or near the Proposed Project site.

3.8.1 Ecosystems and Biological Communities

The climate of the Great Basin-Mojave Desert region is one of the most varied and extreme in the world (NDOW 2006). The harsh conditions and abundant xerophytic and halophytic vegetation types associated with Mojave Warm Desert Scrub, would, at first glance, give the impression of a somewhat inhospitable and uninviting habitat (NDOW 2006). However, a large complement of wildlife species, including many bird, small mammal and reptile species depend on or at least partially use Mojave Warm Desert Scrub habitat, as well as other nearby habitats (NDOW 2006).

Mammals, reptiles, and birds are among the wildlife found in the community. Common organisms found within the desert environment are: desert tortoise, coyotes (*Canis latrans)*, desert kit fox (*Vulpes macrotisarsipus),* snakes, lagomorphs, lizards, gophers, mice, bats, birds, and porcupines (*Erethizon dorsatum)*. There are myriad insects that are a vital resource for other wildlife as well as important pollinators for the variety of vegetation. General types of insects are moths, butterflies, ants, beetles, spiders, grasshoppers and crickets.

Throughout the Mojave Desert the native understory is being replaced with non-native species such as red brome (*Bromus rubens*), cheatgrass (*Bromus tectorum*), Sahara mustard (*Brassica tournefortii)*, halogeton (*Halogeton glomeratus*), and Russian thistle (*Salsola collina*). Non-native annual grass species such as red brome, cheatgrass, and Mediterranean grass (*Schismus barbatus*) compete with native forage plants for which the desert tortoise depends (IWAC 2006). New concerns have arisen because these invasive plants have proliferated to an extent capable of significantly altering the Mojave scrub fire return interval from centuries (~500 years) to decades, causing a potentially irreversible shift in plant communities, and putting maintenance of the ecosystem at risk (NDOW 2006). High temperatures and oxygen depletion caused by these fires can kill individual tortoises, but it is habitat alteration that appears to have the most wide-ranging impact (IWAC 2006). The tortoises and other wildlife that do survive fires are forced to survive on non-native grasses, which is of decreased nutritional value as compared to the native vegetation. Furthermore, the consequence of loss of perennial shrubs leaves tortoises and other wildlife with very little shade to escape the desert sun.

The biggest challenge facing wildlife in the Mojave Desert is conversion of habitat through urban and suburban development (NDOW 2006). Human population growth, construction, mining, off-road vehicle use, and invasive species are all contributing factors that result in loss or degradation of habitat. Furthermore, overharvesting of highly desirable reptiles is of great concern. Susceptible reptiles include chuckwallas (*Sauromalus obesus)*, collared lizards (*Crotaphytus* spp.), and desert iguanas (*Dipsosaurus dorsalis*).

Vegetation within the Project area is composed primarily of Mojave Desert creosotebush scrub as defined by Holland's (1986) classification of plant communities. Disturbed areas, both within and adjacent to the Project area, are associated with multiple dirt roads and off-highway vehicle (OHV) trails, flooding, existing transmission lines, adjacent railroad and interstate highway (to the east) and nearby residences (to the south). **Table 3-6** lists the acreages of the various vegetative cover types occurring within the project area. **Figure 3-6** shows the distribution of those cover types in the Project area.

Creosotebush-White Bursage

This community is dominated by creosotebush shrubs (*Larrea tridentata*) and white bursage (*Ambrosia dumosa*), 0.5-1.5 meters tall, widely spaced, usually with bare ground between. Other common species in this community include boxthorn (*Lycium* sp.), hop sage (*Grayia spipnosa*), desert trumpet flower (*Eriogonum inflatum*), and Arabian schismus (*Schismus arabicus*). Many species of ephemeral herbs may flower in late March and April if the winter rains are sufficient. This plant community is usually found on well drained secondary soils with very low water-holding capacity on slopes, fans, and valleys. Other, less numerous species of annuals appear following summer thundershowers. This creosotebush scrub is typical of the Mojave Desert. Nearly the entire solar site and most of the gen-tie transmission routes, access roads, and water pipeline are covered by this vegetation community.

White bursage is a pioneer species and provides a stable environment for creosote bush to establish a foothold. The typical growth height for creosotebush is four feet, although some may reach up to 12 feet with an adequate water supply.

Many desert animals use creosote bush for shelter. Burrows are dug around and under creosote bushes by both reptiles and amphibians. Roots of creosote bush stabilize the soil and support burrows of the desert tortoise. Large kit fox den complexes are often found in association with creosote habitat for the same reason (NDOW 2006). Most animals bed in or under the bushes as well as use them for perching or nesting. Creosote bush enables animals to escape the harsh sun and extreme temperatures as well as provides cover and escape from predators. Creosote bush is browsed, or consumed, by many small mammals. The foliage, twigs and seeds are readily consumed as a food source.

White bursage commonly grows on arroyos, bajadas, gentle slopes, valley floors, and sand dunes at elevations up to 3,000 feet throughout the Sonoran and Mojave Deserts (USDAFS 2010). White bursage is a desert shrub growing up to two feet tall and spanning three feet in width. White bursage is of intermediate forage value (USDAFS 2010). White bursage plants, seedlings, and seeds are a food source for black-tailed jackrabbits (*Lepus californicus)*. Desert rodents, such as the kangaroo rat (*Dipodomys sp.)*, also consume the seeds.

TABLE 3-6 VEGETATIVE COVERTYPES WITHIN THE PROJECT AREA SOLAR SITE AND ROWS		
Project Component	**Vegetation Covertype**	**Acreage**
Solar Site	Creosotebush-White Bursage	524
	Disturbed	8
	Mojave Xeroriparian	11
	TOTAL	**543**
Gen-tie ROWs	Creosotebush-White Bursage	35
	Disturbed	16
	Mojave Xeroriparian	1
	TOTAL	**52**
Water Pipeline ROW	Creosotebush-White Bursage	0
	Disturbed	2
	Mojave Xeroriparian	0
	Tamarisk/Mesquite	0
	TOTAL	2
PROJECT AREA TOTAL		**597**

Mojave Xeroriparian

Xeroriparian habitats were associated with the small washes that cross the various portions of the project area. These habitats generally resembled the Creosotebush-white bursage habitats but had a higher overall density of vegetation as well as a greater abundance of big galleta grass (*Pleuraphis rigida*). Other species included cholla, (*Cylidropuntia* sp.), beavertail cactus (*Opuntia basilarus*), catclaw (*Acacia greggi*) ephedra (*Ephedra* sp.), and apricot mallow (*Sphaeralcea ambigua*).

Tamarisk/Mesquite

A mesquite/tamarisk bosque is located along the margins of the Muddy River. This area is entirely dominated by mesquite (*Prosopis* sp.) and tamarisk (*Tamarix ramosissima*) with no understory species. This vegetation type provide some potential habitat; however, the plants appeared to be dead, dying, or in generally poor physical condition. Therefore, potential habitat along the Muddy River is diminishing and will continue to do so unless efforts are undertaken to restore riparian habitats.

Disturbed

Disturbed habitats include all areas with little or no native vegetation as a result of anthropogenic disturbance. These areas include existing roads (paved and unsurfaced), OHV trails, transmission line pole sites, residential and commercial developments, and other areas that have been significantly altered.

3.8.2 Vegetation

The Mojave Desert hosts a wide variety of vegetation, including approximately 250 species of annual herbaceous plants, at least 80 of which are endemic (Randall et al. 2010). These plants are typically tolerant of low humidity, prolonged droughts, desiccating winds, high alkalinity or salinity, rocky or very sandy soils, and the periodic influx of high quantities of water in the form of surface flooding (NDOW 2006).

The most commonly found plant species in the Mojave Desert are creosote bush and white bursage. Approximately 70 percent of the Mojave Desert is covered by creosotebush-white bursage associations. Species associated with creosotebush-white bursage communities in the Mojave Desert include Shockley's goldenhead (*Acamptopappus shockleyi*), Anderson's wolfberry (*Lycium andersonii*), range ratany (*Krameria parvifolia*), Mojave yucca (*Yucca schidigera*), California joint fir (*Ephedra funerea*), spiny hopsage (*Grayia spinosa*), and winterfat (*Krascheninnikovia lanata*). Other associated species are desert senna (*Cassia armata*), Nevada ephedra (*Ephedra nevadensis*) and white burrobrush (*Hymenoclea salsola*) (USDAFS 2010). Grasses regularly found are big galleta (*Pleuraphis rigida*), Indian rice grass (*Oryzopsishymenoides*), bush muhly (*Muhlenbergia porteri*), fluff grass (*Erioneuron pulchellum*), red brome (*Bromus rubens*), desert needle (*Stipa speciosa*), Arabian grass (*Schismus arabicus*), snakeweed (*Gutierrezia* spp), desert trumpet (*Eriogonum inflatum*), fourwing saltbush (*Atriplex canescens*) and desert grass (*Blepharidachne kingii*).

The Proposed Project area is dominated by open stands of creosotebush and white bursage. Mojave xeroriparian, tamarisk/mesquite, and disturbed habitats are also present. Cactus species observed during the biological surveys were the beavertail pricklypear (*Opuntia bsilaris*), buckhorn cholla (*Cylindropuntia acanthocarpa*), cottontop cactus (*Echinocactus polycephalus*), and common fishhook cactus (*Mammillaria tetracistra*). The majority of the Proposed Project area was homogeneous creosote bush – white bursage with sporadic inclusions of other species.

A list of plant species observed in the Proposed Project area is presented in **Table 3-7**.

TABLE 3-7 PLANT SPECIES OBSERVED ON PROPOSED PROJECT SITE	
Common Name	**Scientific Name**
Creosote bush	*Larrea tridentata*
White bursage	*Ambrosia dumosa*
Desert senna	*Senna armata*
Desert trumpet	*Eriogonum inflatum*
Big galleta	*Pleuraphis rigida*
Beavertail pricklypear	*Opuntia basilaris*
Buckhorn cholla	*Cylindropuntia acanthocarpa*
Devil's spineflower	*Chorizanthe rigida*
Desert globemallow	*Sphaeralcea ambigua*
Catclaw acacia	*Acacia greggii*
Rough joint fir	*Ephedra nevadensis*
Compact brome	*Bromus madritensis*
Mediterranean grass	*Schismus barbatus*
Three awn	*Aristida purpurea*
Desert marigold	*Baileya multiradiata*
Wingnut cryptanth	*Cryptantha pterocarya*
Cleftleaf phacelia	*Phacelia crenulata*
Red brome	*Bromus tectorum*
Russian thistle	*Salsola tragus*
Gilia	*Gilia sp.*
Buckwheat	*Eriogonum sp.*
Threadleaf snakeweed	*Gutierrezia microcephala*
Cottontop cactus	*Echinocactus polycephalus*
Common fishhook cactus	*Mammillaria tetracistra*
Pincushion flower	*Chaenactis fremontii*
Brownplume wirelettuce	*Stephanomeria pauciflora*
Four o'clock	*Mirabilis sp.*
Desert indianwheat	*Plantago ovata*
Desert needlegrass	*Achnatherum speciosum*
Indian ricegrass	*Achnatherum hymenoides*
Low woollygrass	*Erioneuron pulchella*

Source: Newfields 2015a

3.8.2.1 Riparian Habitats

The Proposed Project site contains nine ephemeral desert washes that supported slightly higher densities of big galleta grass than adjacent upland areas; these represent

xeroriparian habitat, though there are no xeroriparian tree species present. Catclaw is present in most of these washes, as well as big galleta grass, which also distinguishes them from the uplands. Seven of the washes are on the proposed solar site, one is along the pipeline corridor, and one is crossed by the gen-tie.

3.8.2.2 Federally–Listed and Candidate, Threatened or Endangered Plant Species

3.8.2.2.1 Las Vegas Buckwheat

In April 2008, the Center for Biological Diversity (CBD) petitioned the U.S. Fish and Wildlife Service (USFWS) to protect the Las Vegas buckwheat (*Eriogonum corymbosum nilesii*) under the federal Endangered Species Act (ESA). The Las Vegas buckwheat was designated as a candidate for ESA listing on December 10, 2008. The Las Vegas buckwheat is also designated as a sensitive species by the BLM.

The Las Vegas buckwheat is native to Las Vegas and is found in Clark and Lincoln counties. Soils with high gypsum levels are preferred and only 859 acres of habitat remain that are not yet slated for development (CBD 2010).

Human population growth and urban development have resulted in the loss of over 95 percent of the potential historical habitat for the Las Vegas buckwheat in the Las Vegas Valley (USFWS 2013b). Loss of habitat has also resulted from off-road vehicle recreation, gypsum mining, and energy corridors. The Las Vegas buckwheat was not observed on the Proposed Project site or ROWs during biological surveys. The Proposed Project site does not contain suitable habitat for this species and none were detected during biological surveys of the Project area.

3.8.2.3 State Protected, Regulated, Listed and BLM Special Status Vegetation Species

3.8.2.3.1 Mojave Yucca

Mojave yucca is a common inhabitant of the creosote desert flats. This plant provides browse for a number of wildlife species during spring, summer, and fall. The flowerstalks and foliage of Mojave yucca are palatable to Merriam kangaroo rats (*Dipodomys merriami*), white-tailed antelope squirrels (*Ammospermophilus leucurus)*, woodrats (*Neotoma* spp.*)*, desert cottontails (*Sylvilagus auduboni)*, black-tailed jackrabbits, and some wild ungulates during much of the year (USDA 2012). The Mojave yucca provides shelter and shade for many mammals, birds and reptiles. There is an obligate, mutualistic relationship between the Mojave yucca and the small white yucca moth (*Tegeticula yuccasella*). The sale and

transport of Mojave yucca is protected and regulated by the State of Nevada under Nevada Revised Statute (NRS) and Nevada Administrative Code (NAC) Chapter 527. Mojave yucca is present on the Proposed Project site.

3.8.2.3.2 Blue Diamond Cholla

The blue diamond cholla (*Cylindropuntia multigeniculata*) is on the Nevada state list of fully protected species of native flora (NAC 527.010), also known as the Critically Endangered Species List (NNHP 2010). No member of its kind may be removed or destroyed at any time by any means except under special permit issued by the state forester fire warden (NRS 527.270) (NNHP 2010).

Blue diamond cholla occurs in a variety of locations and soil types. The blue diamond cholla often occurs on dry, open carbonate ledges, in crevices, and on rocky colluvium on gentle to steep slopes of all aspects, but predominantly on northerly exposures, canyon walls, or other cooler or more protected exposures, in close proximity to overlying gypsum beds up-slope, and associated with numerous other succulent and shrub species of the creosote bush vegetation communities (NNHP 2010).

The blue diamond cholla is impacted by mining, though most populations are now protected. It still remains vulnerable to illegal collecting and fugitive dust along unpaved roads (NNHP 2010). Blue diamond cholla was not observed on the Project site or linear facilities and suitable habitat for this species is not present.

3.8.2.3.3 State Protected and Regulated Cacti Species

Cacti are another type of vegetation common to the Proposed Project site. Cacti and yuccas, which are protected under Nevada state law (NRS 527 – Protection and Preservation of Timbered Lands, Trees and Flora), were found throughout the upland portions of the Proposed Project site (**Table 3-8)**.

3.8.2.3.4 Three Corner Milkvetch

Three-corner milkvetch (*Astragalus geyeri* var. *triquetrus*) is a short, spindly, but upright annual forb with pinnately divided leaves that is listed as a State of Nevada Fully Protected Species. The small pea-flowers are white, but the defining character is the three-cornered seedpod (NNHP 2010). This species is known to occur in the vicinity of the Proposed Project site (NNHP 2013). No plants and no suitable habitat for this species (i.e., areas of wind-blown sand) were found in the Proposed Project site.

TABLE 3-8 STATE PROTECTED AND REGULATED CACTI OBSERVED ON PROPOSED PROJECT SITE		
Scientific Name	**Common Name**	**Protection Status**
Mammillaria tetrancistra	common fishhook	CY
Echinocactus polycephalus	cottontop cactus	CY
Opuntia basilaris	Beavertail prickly pear cactus	CY
Yucca schidigera	Mojave yucca	CY

Source: Nevada Natural Heritage 2010.
CY = Protected as a Cactus, Yucca, or Christmas tree

3.8.2.3.5 Beaverdam Breadroot

Beaverdam breadroot (*Pediomelum castoreum*) is not designated a sensitive species by the BLM or protected by the State of Nevada, though the species was placed on the NNHP At-Risk Tracking List (G3S3 [NNHP 2010]). No plants and no suitable habitat for this species (i.e., areas of wind-blown sand) were found on the Proposed Project site or linear facilities.

3.8.2.3.6 Nye Milkvetch

Nye milkvetch (*Astragalus nyensis*) is not designated a sensitive species by the BLM or protected by the State of Nevada, though it is on the NNHP At-Risk Tracking List (G3 S3 [NNHP 2010]). It occurs in foothills of desert mountains, calcareous outwash fans and gravelly flats, and sometimes in sandy soil. No individuals were found, but suitable habitat for this species exists on the Proposed Project site.

3.8.2.3.7 Rosy Twotone Beardtongue

The rosy twotone beardtongue (*Penstemon bicolor* ssp. *roseus*) is a perennial herb known in Nevada from Clark and Nye counties. This species is found on rocky, calcareous, granitic, or volcanic soils in washes, roadsides, scree at outcrop bases, rock crevices, or similar places receiving enhanced runoff in creosote-bursage, blackbrush, mixed-shrub, Joshua tree woodland, and Mojave desert communities from 1,800 to 4,839 feet. The location of the Project is below the known elevation range and surveys did not detect this species within the Proposed Project site or linear facilities.

3.8.2.3.8 White Bearpoppy

The white bearpoppy (*Arctomecon merriamii*) is an evergreen perennial herb that blooms from April through July. This species is found in Nevada from Clark, Nye, and Lincoln counties on wide variety of dry to sometimes moist basic soils, including alkaline clay and sand, gypsum, calcareous alluvial gravels, and carbonate rock outcrops in chenopod scrub

and rocky Mojave desert communities from 1,600 to 6,280 feet. The white bear poppy is listed as a special status species in Nevada by the BLM (NNHP 2001). The suitable habitats are limited to the badland areas on the perimeter of the Project and surveys did not detect this species within the Proposed Project site or along the linear facilities.

3.8.3 Wildlife

3.8.3.1 Terrestrial

The Mojave Desert is principally inhabited by heat-tolerant organisms with specialized adaptations for thriving in an inhospitable environment. Species inhabiting the Proposed Project site and observed during the biological surveys included numerous species of birds, mammals, and a variety of reptiles. Commonly observed avian species include: turkey vultures (*Cathartes aura*), mourning doves (*Zenaida macroura*), and common ravens (*Corvus corax*). Small mammal residents include, Merriams's kangaroo rats (*Dipodomys merriami*), long-tailed pocket mice (*Chaetodipus formosus*), desert woodrats (*Neotoma lepida*), cactus mice (*Peromyscus eremicus*), and white-tailed antelope squirrels (*Ammospermophilus leucurus*). Common larger mammals include coyotes, kit foxes, and black-tailed jackrabbits (*Lepus californicus*). Reptiles include western whiptail lizards (*Aspidoscelis tigris*), side-blotched lizards (*Uta stansburiana*), long-nosed leopard lizards (*Gambelia wislizenii*), and desert tortoises (*Gopherus agassizii*).

3.8.3.1.1 Bats

No bats are currently listed by the USFWS or the NNHP as threatened or endangered in Clark County, Nevada (USFWS 2013c, NNHP 2010). The BLM has designated twelve species of bat as sensitive species. BLM policy is to provide these species with the same level of protection as is provided for candidate species in BLM Manual 6840.06 C, that is to "ensure that actions authorized, funded, or carried out do not contribute to the need for the species to become listed." The sensitive species designation is used for species that occur on BLM-administered lands for which BLM has the capability to significantly affect the conservation status of the species through management. The twelve protected bat species are: California leaf-nosed bat (*Macrotus californicus*), California myotis (*Myotis californicus*), Townsend's big-eared bat (*Plecotus townsendii*), western red bat (*Lasiurus blossevillii*), big free-tailed bat (*Nyctinomops macrotis*), fringed myotis (*Myotis thysanodes*), Allen's lappet-eared bat (*Idionycteris phyllotis)*, spotted bat *(Euderma maculatum),* Western pipistrelle *(Pipistrellus hesperus*), Brazilian free-tailed bat (*Tadaroda brasiliensis),* pallid bat *(Antrozous pallidus)* and cave myotis (*Myotis velifer*). They are only expected to be present within the Proposed Project during nocturnal foraging events. There are no known or expected roosting locations or hibernacula within or in the immediate vicinity of the Proposed Project site.

3.8.3.1.2 Wild Burros

The nearest Herd Management Area (HMA) is approximately 70 miles (muddy Mountain miles southwest of the Proposed Project. The Red Rock HMA is located in southern Nevada, approximately 19 miles west of Las Vegas in Clark County. The BLM Las Vegas District and NPS have joint administrative responsibilities for wild burro management within these public lands. The HMA consists of a total of 220,000 acres.

3.8.3.1.3 Desert Kit Fox (Vulpes macrotis)

Desert kit foxes are widely distributed in desert scrub habitats in western North America including creosotebush scrub. The entire project area is considered potentially suitable habitat for the desert kit fox. A formal kit fox burrow survey has not been conducted for the project area but they have been observed in the area and potentially suitable burrows for this species are likely present.

3.8.3.2 Aquatic

The nearest perennial water source is the Muddy River, located approximately 1 mile south of the Proposed Project. It is considered impaired and is on the 303(d) list as required by the CWA.As discussed in the water quality section, for the Muddy River, NDEP developed site-specific numeric standards for pH, dissolved oxygen, maximum temperature, phosphorous, nitrite, nitrate, turbidity, total dissolved solids, color, and *E. coli* to protect the designated beneficial uses and to maintain existing water quality.

Twenty-nine small ephemeral drainages cross the Project area (900-acre lease area where the solar field would be located and along the gen-tie alternative routes) and contain marginal xero-riparian habitats. Species along ephemeral washes include those contained in the Creosotebush-white bursage habitats but with a higher overall density of vegetation as well as a greater abundance of big galleta grass. Other species included cholla (*Cylidropuntia* sp.), beavertail cactus (*Opuntia basilarus*), catclaw (*Acacia greggi*) ephedra (*Ephedra* sp.), and apricot mallow (*Sphaeralcea ambigua*.

3.8.3.3 Federally-Listed Candidate, Threatened or Endangered Animal Species

The U.S. Fish and Wildlife Service lists fourteen federally listed or candidate threatened or endangered species (**Table 3-9**) in Clark County, NV (USFWS 2015). The Applicant has conducted surveys of federally protected species for any species deemed possible to be present in or near the Proposed Project site. This included desert tortoise in May and October of 2014 (Newfields 2014). Desktop analysis of the geographic range of the Mt. Charleston blue butterfly (*Icaricia shasta charlestonensis)* and the Lahontan cutthroat trout

(*Oncorhynchus clarkii henshawi)* revealed that the Proposed Project does not remotely encroach or infringe on the distribution of those species and eliminated the need to conduct field surveys. Other species with broader geographic distributions were not surveyed because the lack of suitable habitat in or near the Proposed Project site reduced the likelihood of occurrence to practically zero.

TABLE 3-9
FEDERALLY LISTED AND CANDIDATE THREATENED OR ENDANGERED ANIMAL SPECIES IN CLARK COUNTY, NV

Common Name	Scientific Name	Potential to Occur within Project Area
Relict leopard frog	*Lithobates onca*	No
Southwestern willow flycatcher	*Empidonax traillii extimus*	Remote
Yellow-billed cuckoo	*Coccyzus americanus*	Remote
Yuma clapper rail	*Rallus longirostris yumanensis*	Remote
Bonytail chub	*Gila elegans*	No
Colorado pikeminnow	*Ptychocheilus lucius*	No
Humpback chub	*Gila cypha*	No
Lahontan cutthroat trout	*Oncorhynchus clarkii henshawi*	No
Moapa dace	*Moapa coriacea*	No
Pahrump poolfish	*Empetrichthys latos*	No
Razorback sucker	*Xyrauchen texanus*	No
Virgin River chub	*Gila seminuda*	No
Woundfin	*Plagopterus argentissimus*	No
Desert tortoise	*Gopherus agassizii*	Yes
Mt. Charleston blue butterfly	*Icaricia shasta charlestonensis*	No

Source: USFWS 2015

3.8.3.3.1 Desert Tortoise

The Mojave desert tortoise (desert tortoise) is protected by both by the Endangered Species Act and the State of Nevada. The Mojave desert tortoise is a covered species under Clark County's Multiple Species Habitat Conservation Plan and it is considered sensitive by the BLM. The desert tortoise is a large, herbivorous reptile that occurs in the Mojave Desert in the southwestern United States. The Mojave desert tortoise includes those animals living north and west of the Colorado River in the Mojave Desert of California, Nevada, Arizona, and southwestern Utah, and in the Sonoran (Colorado) Desert in California (USFWS 2011b).

The Mojave desert tortoise has been divided into five Recovery Units (USFWS 2011b). Each Recovery Unit was delineated based on variations in genetic, morphological, ecological, physiological, and behavioral traits (USFWS 1994). Some of the five recovery units were further subdivided into Desert Wildlife Management Areas (DWMAs). A total of 6.4 million acres of critical habitat was designated in 1994 (59 FR: 5820-5866). DWMAs were identified

where populations of tortoises facing similar threats would be managed with the same strategies (59 FR: 5820-5866).

Among the most important recovery actions implemented pursuant to the 1994 Recovery Plan has been formalizing DWMAs through Federal land-use planning processes. Particularly on BLM lands, DWMAs are administered and designated as Areas of Critical Environmental Concern (ACECs). These ACECs define specific management areas based on the general recommendations for DWMAs in the 1994 Recovery Plan. Boundaries of the ACECs were refined slightly from the critical habitat designation based on various management and biological considerations. The BLM's DWMAs/ACECs, together with NPS lands, designated wilderness areas, other lands allocated for resource conservation, as well as restricted-access military lands, provide an extensive network of habitats that are managed either directly or indirectly (e.g., wilderness areas outside desert tortoise ACECs) for desert tortoise conservation (USFWS 2011b).

The Proposed Project is primarily within the boundary of the Moapa Indian Reservation between the Muddy River and Meadow Valley Wash just north of the Reid Gardner Generation Station. The nearest DWMA (Mormon Mesa) to the Proposed Project is approximately 8 miles east of the Proposed Project (USFWS 2011). The Proposed Project is within the Northeastern Mojave Recovery Unit for desert tortoise as designated by the USFWS's "Revised Recovery Plan for the Mojave Population of the Desert Tortoise (*Gopherus agassizii*)" (USFWS 2011).

Desert tortoises occupy a variety of habitats from flats and slopes typically characterized by creosote bush scrub dominated by creosote bush and white bursage at lower elevations, to rocky slopes in blackbrush scrub and juniper woodland ecotones (transition zone) at higher elevations. Throughout most of the Mojave Desert, tortoises occur most commonly on gently sloping terrain with sandy-gravel soils and where there is sparse cover or low-growing shrubs, which allows establishment of herbaceous plants. Soils must be soft enough for digging burrows, but firm enough so that burrows do not collapse. Typical habitat for the desert tortoise in the Mojave Desert has been characterized as creosote bush scrub below 5,500 feet, where precipitation ranges from 2 to 8 inches, and the diversity of perennial plants is relatively high (USFWS 2011).

Desert tortoises are herbivores that consume a wide variety of plant materials including dicot annuals, grasses, herbaceous perennials, trees, shrubs, subshrubs/woody vines, and succulents. A study of their food habits in the Mojave Desert found that they used 43 plant species, including 37 annuals and 6 perennials (Jennings 1997). Some of the preferred plants were dwarf white milkvetch (*Astragalus didymocarpus*), widow's milkvetch (*A. zayneue*), Booth's evening primrose (*Camissonia boothii*), rattlesnake weed (*Camissonia* [*Euphorbia*] *albomarginata*), foothill deervetch (*Lotus humistratus*), Bigelow four o'clock (*Mirabilis bigelovii*), and brightwhite (*Prenanthella exigua*). Desert tortoise diet in this study

showed a very strong preference for native plants (95.3 percent of plants eaten), and some of their preferred food plants were uncommon to rare (Jennings 1997).

A study on juvenile tortoises (Spangenberg 1995) found a preference for non-native, invasive plant species such as Mediterranean grass (*Schismus barbatus*) and filaree (*Erodium cicutarium*). These two species comprised 64 percent of the juvenile tortoise diet. This study also revealed a difference in diet between wet and dry summers. During a very dry summer, tortoises were observed foraging on only three species while they used 15 species during a wet summer (Spangenberg 1995).

Protocol desert tortoise surveys were performed on the proposed Project, transmission line, and pipeline ROW during May and October of 2014. The entire Proposed Project site and linear facilities represents potentially suitable habitat for the desert tortoise.

Table 3-10 describes desert tortoise observations and the associated locations in the Proposed Project Area from the May and October 2014 surveys.

TABLE 3-10
DESERT TORTOISE OBSERVATIONS IN THE PROPOSED PROJECT AREA

Project Component	Desert Tortoise Observations
Solar Site, Gen-tie Corridor, Water Pipeline Total	53 burrows, 9 carcasses, 4 scat, and 4 adult tortoise

Newfields 2015

Desert tortoise population estimates were generated based on recommended methodologies contained in USFWS (2010). These estimates were generated for all Project components for which there were detections of adult desert tortoise. Corrected estimates are reported here with 95% confidence intervals (CI) per USFWS (2010). Confidence intervals consist of a range of values (interval) that act as estimates of the unknown population parameter.

Four live tortoises were observed within the survey area. Therefore, the estimated number of tortoise throughout the Project area was calculated to be 8 = (4/(0.64*0.63)*(1085/1085) with a 95 percent confidence interval of 2.85 to 26.27 (N=8.6).

Desert tortoises are expected to be present at the solar site as well as along the transmission alternatives based on the presence of sign and/or suitable burrows. The Biological Assessment (Newfields 2015) contains a more complete explanation of the survey results, methodologies and analysis (**Appendix K**).

3.8.3.3.2 Yuma Clapper Rail

The Yuma clapper rail was listed endangered under the Endangered Species Preservation Act (ESA) of 1966 on March 11, 1967 (32 FR 4001). The Recovery Plan was finalized in 1983 and portions of the Action Plan were initiated over the ensuring years. Critical habitat has not been designated for the species.

The elusive species occupies marsh-like situations around rivers, ponds, and bogs where emergent vegetation such as cattails, bulrush, and reed grass occur (Eddleman 1989; Todd 1977). Densities of rails are highest in light cattail stands, followed in descending order by light bulrush stands, dense bulrush stands, and dense cattail stands. Stands dissected with narrow channels of flowing water have higher densities of birds. The bird begins nesting in February, with egg-laying occurring from March to July. Clutch size is typically 6 to 8 eggs, and young are precocial.

The Yuma clapper rail climbs around on flattened, floating materials and feeds mainly on crayfish although other invertebrates, arthropods, and fish are eaten as well. Nests can be found in a variety of situations within emergent wetland habitats as long as stable substrates are available (USFWS 1996).

The present range of the Yuma clapper rail in the U.S. includes portions of Arizona, California, and Nevada. The Yuma clapper rail lives in freshwater marshes dominated by cattail (*Typha* sp.) and bulrush (*Scirpus* spp.) with a mix of riparian tree and shrub species (*Salix exigua, S. gooddingii, Tamarix* sp*., Tessaria sericea, and Baccharis* sp.). Field reconnaissance of the Muddy River conducted in September 2014 found that there was no suitable habitat for this species in the vicinity. This species is known to occur along the Muddy River within the Overton Wildlife Management Area, over 15 miles from the Project. There is no suitable habitat within the Project area, though transitory or migratory individuals have the potential to pass over or through the area.

3.8.3.3.3 Southwestern Willow Flycatcher

The southwestern willow flycatcher was listed as endangered without critical habitat on February 27, 1995 (60 FR 10694; USFWS 1995). Critical habitat was later designated on July 22, 1997 (62 FR 39129; USFWS 1997). On October 19, 2005, the USFWS re-designated critical habitat for the southwestern willow flycatcher (70 FR 60886; USFWS 2005). A total of 737 river miles across southern California, Arizona, New Mexico, southern Nevada, and southern Utah were included in the final designation. The lateral extent of critical habitat includes areas within the 100-year floodplain. The primary constituent elements of critical habitat are based on riparian plant species, structure and quality of habitat and insects for prey. A recovery plan for the southwestern willow flycatcher was first completed in 2002 (USFWS 2002).

The nearest designated critical habitat is located along the Virgin River approximately 20 miles east of the Project area. No designated critical habitat is found along the Muddy River.

Southwestern willow flycatchers are insectivores that forage within and occasionally above dense riparian vegetation, taking insects on the wing and gleaning them from foliage (USFWS 1997). They generally nest in thickets of shrubs and trees 13-23 feet (min. 5 ft.) or more in height, with dense canopy foliage (>67%) from 0-14 feet above ground (USFWS 1995). Historically, this flycatcher nested primarily in willows, with a scattered cottonwood overstory (USFWS 1997). Habitats not selected for nesting or male song perches were narrower riparian zones, with greater distances between willows stands and individual willow plants. Southwestern willow flycatchers virtually always nest near surface water or saturated soils. Stream gradient might also be an important determinant of habitat suitability. No nest sites have been found along streams with gradients >4%, characterized by almost continuous riffles, rapids, falls, or other cataracts (USFWS 1995). This may be due to higher gradient streams forming or supporting inadequately narrow riparian corridors.

Breeding habitat selection is based primarily on vegetation structure, density, size and presence of water or saturated soils. During field reconnaissance conducted in September 2014, it was determined that habitat for the Southwestern willow flycatcher was moderate to poor at best. The invasive salt cedar (*Tamarix ramosissima*) provided some potential habitat, however the plants appeared to be dead, dying, or in generally poor physical condition. The likely cause is the tamarisk leaf beetle (*Diorhabda elongata*), which has moved into riparian habitats on the Virgin and Muddy Rivers and Meadow Valley Wash after releases in adjoining states, and has resulted in patchy but widespread defoliation of these monoculture tamarisk stands. Thus, potential habitat along the Muddy River is diminishing and will continue to do so unless efforts are undertaken to restore riparian habitats. The USFWS reports that the rapid loss of salt cedar in occupied habitats, without rapid replacement with native species, will likely result in the degradation and loss of habitat (USFWS 2002). This is evident within the survey area. No USFWS designated critical habitat is found within or near the Project site. There is no suitable habitat within the Project area, though transitory or disbursing individuals have the potential to pass over or through the area.

3.8.3.3.4 Yellow-billed Cuckoo

On October 3, 2014, the western yellow-billed cuckoo was designated as a threatened species under the ESA (79 FR 59992; USFWS 2014c). The only known nesting sites in Nevada for the western yellow-billed cuckoo are at Warm Springs Ranch Natural Area along the Muddy River in Moapa Valley (Nevada Department of Wildlife [NDOW] 2007). **Figure 3-7** illustrates the western yellow-billed cuckoo proposed USFWS Critical Habitat is at least 4 miles northwest of the proposed Project.

The western population of the yellow-billed cuckoo has been associated with cottonwood-willow dominated riparian habitats, with the majority of nests located in willows and, to a lesser extent, in Fremont cottonwoods. Cuckoos have been found nesting in tamarisk and mesquite, with nests generally concealed by willow foliage, but are also concealed by other types of vegetation.

The western yellow-billed cuckoo requires large tracts of undisturbed riparian deciduous forests where willow, cottonwood, sycamore, or alder occur. Cuckoo nests have also been found in areas of tall mesquite with isolated cottonwood trees. Cuckoos prefer dense vegetation with a multi-layered canopy, which creates a humid environment.

Suitable habitat does not occur in the Muddy River proximal to the proposed Project. Additionally, habitat identified by the USFWS as critical near the Warm Springs was recently burned and the habitat quantity and quality greatly diminished therefore this degradation of the critical habitat reduced the source of birds that could have potentially used portions of the Muddy River near the Project. Field reconnaissance of the Muddy River conducted in September 2014 found that there was no suitable habitat for this species (i.e. cotton-willow riparian habitats or undisturbed riparian deciduous forests) in the Project vicinity as depicted in representative photographs shown on (**Figure 3-7**). However, because this valley contains the Muddy River, transitory or disbursing individuals have the potential to pass over or through the area.

3.8.3.3.5 Moapa Dace

While Moapa dace does not occur in the immediate vicinity of the Project, the flow of the springs that feed the portions of the river where dace occur have been determined to sensitive to significant groundwater withdrawals. The Moapa dace was listed as an endangered species under the Endangered Species Preservation Act of 1966 on March 11, 1967, and under the subsequent Act. Critical habitat has not been designated for the Moapa dace. This species is endemic to the Muddy (Moapa) River and associated thermal spring systems within the Warm Springs area of Clark County, Nevada. The Warm Springs area encompasses ten thermal spring provinces, which form the headwaters of the Muddy River. Moapa dace likely inhabited 25 springs and approximately 16 km of the upper Muddy River (Ono et al. 1983). Historically the Muddy River was 48.4 km long, however in 1935, with the completion of the Hoover Dam, Lake Mead flooded the lower 8 km of the river, rendering it unsuitable for Moapa dace. Previous surveys found adult Moapa dace occurring in low numbers in restricted portions of 3 springs and less than 2 miles of spring outflow and river in the Warm Springs area (USFWS 1983).

Moapa dace persist within several warm springs and associated springbrooks that have been altered greatly by humans. Downstream habitats, where adult dace from different spring systems mixed historically, are now infested with exotic predatory fish. In many cases

infested habitats are intentionally blocked from upstream areas by fish barriers built to prevent the spread of exotic fish. The resulting fragmented population structure threatens the dace's genetic and demographic health, although barriers must be maintained until the threats of exotic fish are eliminated (USFWS 2009a).

The proposed Project would use surface water from the Muddy River via a water intake pump and water pipeline. However, the Proposed Action is located several miles downstream of occupied habitat and the species no longer occurs in the main stem of Muddy River in the vicinity of Project area because of exotic predatory fish and fish barriers. Additionally, the Project is located almost 2 miles southeast (downstream) of the area selected for USFWS snorkel surveys for Moapa dace from 2005-2013, and was likely not surveyed because the Project area is not considered suitable dace habitat (Figure 3-3 from the BA). The Project area is located downstream of Reach 11 and approximately 2 miles south of Warm Springs Road.

Moapa dace occupy a variety of habitats in the Warm Springs area, including spring pools, tributaries (spring outflows) and the main stem Muddy River. The Moapa dace prefers habitat within local headwaters where water temperatures are between 28°C and -32°C and turbidity is low. Native waters for the Moapa dace are clear with variable bottom types in pool habitats and may be spring deposited gravels or flocculent organic/silt.

This species substantially declined with the introduction of the shortfin molly (*Poecilia mexicana*) in 1963, and extensive habitat modification that occurred 20 to 30 years ago. The greatest threat is physical destruction or alteration of habitat. Most or all of the springs originally containing Moapa dace still flow; however, the spring systems have been altered for recreation, irrigation, industrial, and municipal use.

In addition to the introduction of the shortfin molly, other fishes including the common carp (*Cyprinus carpio*), channel catfish (*Ictalurus punctatus*), largemouth bass (*Micropterus salmoides*), fathead minnow (*Pimephales promelas*), and black bullhead (*Ameiurus melas*) have been introduced into the Moapa dace habitat and may affect the decline of the Moapa dace population in the future (USFWS 1995). Prior fish introductions have introduced fish parasites including tapeworms (*Bothriocephalus acheilognathi*), nematodes (*Contracaecum* spp.), and anchor worms (*Lernaea* spp.), which have adversely affected native fishes of the Muddy River (USFWS 1995).

3.8.3.4 State Listed Wildlife, BLM Sensitive Wildlife Species, and Selected Birds Protected under the Migratory Bird Treaty Act and Bald and Golden Eagle Protection Act

There are a number of species that potentially occur in the area that have been identified by state and federal agencies as sensitive. The sections below discuss state listed wildlife, BLM sensitive wildlife species, and selected birds protected under the Migratory Bird Treaty Act and Bald and Golden Eagle Protection Act.

3.8.3.4.1 Burrowing Owl

Burrowing owls inhabit the Mojave Desert portions of Clark County and are protected under the Migratory Bird Treaty Act (MBTA). Burrowing owls in Southern Nevada are active year-round, do not hibernate, and tend to be year-round residents as opposed to migratory (NDOW 2008).

Burrowing owls are found in open dry shrub/steppe grasslands, agricultural and range lands, and desert habitats associated with burrowing animals (NDOW 2010). They consume an assortment of prey items consisting of beetles, grasshoppers, scorpions, small mammals, reptiles, other birds and bats. These owls primarily reside and nest in the abandoned burrows of the desert tortoise, although the burrows of kit foxes and other mammals are used as well. The burrowing owl may be affected by the loss of suitable desert tortoise burrows as a result of the Proposed Project (NDOW 2008). These owls will also use man-made burrows, as well as pipes or small culverts, which are often found on construction sites (NDOW 2008).

Burrowing owl numbers are declining despite protection under the MBTA (USFWS 2007). These owls are not listed as threatened or endangered in Nevada, but biologists are starting to see a range-wide decline due to loss of habitat and collisions with vehicles (NDOW 2008). Loss of habitat from development and construction as well as high mortality rates from collisions with automobiles has caused range-wide decline of this species.

During the 2014 desert tortoise surveys, suitable burrowing owl burrows were documented, as well as one dead individual; no live burrowing owls were observed (Newfields 2014). The entire site is considered suitable foraging habitat for burrowing owls and the species is expected to occur on the site and along the linear facilities, though in very low densities.

3.8.3.4.2 Le Conte's Thrasher

The Le Conte's thrasher (*Toxostoma lecontei*) is protected under the MBTA. The Le Conte's thrasher is an Evaluation Species under the Clark County Multiple Species Habitat Conservation Plan (MSHCP). Habitat consists of sparsely vegetated desert flats, dunes, alluvial fans, or gently rolling hills having high proportion of one or more species of saltbush or shadscale and/or cholla cactus 3-6 feet high. Other desert habitats with similar structural profiles but lacking saltbush/shadscale or cholla cactus also are used. This species rarely occurs in habitats consisting entirely of creosote bush. The majority of shrubs rarely exceed 8 feet in height, except for isolated desert trees, yuccas, or tall, thin shrubs (NatureServe 2009a).

The Proposed Project site is dominated by creosote bush/white bursage habitat and the Le Conte's thrasher is not likely to occur within the area as there is little suitable habitat present. Le Conte's thrashers were not observed in the Proposed Project site and are not known to occur in the vicinity.

3.8.3.4.3 Loggerhead Shrike

Loggerhead Shrike (*Lanius ludovicianus*)is a BLM Sensitive Species, protected by the MBTA, and is a year-round resident in Clark County. The Loggerhead Shrike prefers open habitat with perches for hunting and fairly dense shrubs for nesting. Loggerhead Shrikes were not observed in the Project area during surveys, though they are expected to occur. The creosotebush-white bursage and xeroriparian habitats in the project area provide suitable foraging habitat for this species; tamarisk/mesquite habitats provide suitable nesting habitat.

3.8.3.4.4 Phainopepla

Phainopepla (*Phainopepla nitens*) is a BLM Sensitive Species, protected by the MBTA, and is a nesting resident in Clark County between February and April. Phainopepla prefers similar habitats as Loggerhead Shrike (described above), though in the desert, Phainopeplas depend on fruiting desert mistletoe (*Phoradendron californicum*), which parasitizes the same trees used for nesting, and produces a stable, long-lasting supply of berries (Chu et. al 1999). No Phainopepla nests were identified during biological surveys, though the species may nest in the xeroriparian and tamarisk/mesquite habitats in the vicinity.

3.8.3.4.5 Golden Eagle

The golden eagle (*Aquila chrysaetos)* is protected under the Bald and Golden Eagle Protection Act as well as the MBTA (USFWS). Golden eagles generally inhabit open and

semi-open country such as prairies, sagebrush, arctic and alpine tundra, savannah or sparse woodland, and barren areas, especially in hilly or mountainous regions, in areas with sufficient mammalian prey base and near suitable nesting sites. In Nevada, the only habitats routinely avoided by golden eagles are forests, large agricultural areas, and urban areas.

Nests are most often on rock ledges of cliffs but sometimes in large trees on steep hillsides, or on the ground. Nesting cliffs may face any direction and may be close to or distant from water (NatureServe 2009b).

The entire Proposed Project site is considered suitable foraging habitat for golden eagles and the species is likely to occasionally forage within the Proposed Project site. No suitable nesting habitat is present in the Proposed Project site, and no nests are known to be present within the project area. A nest survey within a 10-mile radius from the project area was conducted in January 2015 (Newfields 2015b). Only four potential raptor nests were identified (likely red-tailed hawk or golden eagle); three of these were within ½ mile of one another. No golden eagles were observed during the survey. Most of the nesting substrate (cliff bands) observed within the 10-mile radius during the survey were very low quality for golden eagles and likely greatly limit the ability for nesting within 10 miles of the Project area.

3.8.3.4.6 Gila Monster

The BLM has recognized the Gila monster as a sensitive species since 1978. Most recently, the Gila monster was designated as an Evaluation species under Clark County's Multiple Species Habitat Conservation Plan (MSHCP). The evaluation designation was warranted because inadequate information exists to determine if mitigation facilitated by the MSHCP would demonstrably cover conservation actions necessary to insure the species' persistence without protective intervention as provided under the ESA.

The banded Gila monster (*Heloderma suspectum cinctum*) is the subspecies that occurs in Clark, Lincoln, and Nye counties of Nevada. Found mainly below 5,000 feet, its geographic range approximates that of the desert tortoise and is coincident to the Colorado River drainage. Gila monster habitat requirements center on desert wash, spring, and riparian habitats that inter-digitate primarily with complex rocky landscapes of upland desert scrub. They will use and are occasionally encountered out in gentler terrain of alluvial fans (bajadas). Hence, Gila monster habitat bridges and overlaps that of the desert tortoise. Gila monsters are secretive and difficult to locate, spending greater than 95 percent of their lives underground (USFWS 2011a).

The NNHP lists the entire Proposed Project site as suitable habitat for this species. Surveys conducted for the desert tortoise during May and October of 2014 did not detect any Gila

monsters, but did confirm that the Proposed Project site represents suitable habitat for this species.

3.9 Cultural Resources

3.9.1 Cultural History

The region has been continually occupied and utilized for the last 12,000 years. The area's prehistory can be divided into five periods that reflect considerably different lifeways. The major periods include Paleoindian (9,500 to 7000 B.C.), Archaic (7000 to 300 B.C.), Formative (300 B.C. to A.D. 1250), Late Prehistoric (A.D. 1150 to 1776), and Historic (A.D. 1776 to 1950). More detailed cultural overviews are available in Altschul and Fairley(1989), Dalley and McFadden (1985), Jennings (1978), Kelly (1997), Kelly and Fowler (1986), Lyneis (1995), and Roberts and Altschul (2012).

The region was sparsely occupied during the Paleoindian period (9,500 to 7,000 B.C.), as suggested by the small number of fluted, lanceolate, and similar projectile point types dating to this period. The paucity of Paleoindian sites may be due to the overall low population densities during this period; it is also possible that human groups routinely occupied landforms that have become eroded or deeply buried, making it difficult to identify sites. Paleoindian groups appear to have followed a mobile hunting and gathering lifestyle focused on hunting large game. Recent research has suggested, however, that a mixed subsistence economy was the more likely subsistence strategy (Haury 1986). The Paleoindian period ended with the retreat of the ice age.

The Archaic period follows the Paleoindian and becomes established as the climate ameliorated after 7000 B.C. Lifestyles during this time are as diverse as the geographical setting where the sites are discovered. In general, there is a trend toward increased reliance on gathering within seasonal rounds—as evidenced by the greater prevalence of grinding tools in artifact assemblages. The paucity of artifacts at these sites lends to their interpretation as temporary camps where food collection and processing, tool manufacture, or quarrying occurred. Archaic sites typically contain a variety of diagnostic stemmed and notched projectile points in association with bifacial tools, oval or round manos, and basin-shaped metates. Some of the more common projectile points during the Archaic period include Elko Corner-notched, Elko Side-notched, Elko Eared and Gypsum.

In the general project area, the Formative period, associated with the Virgin branch of the Anasazi cultural tradition, follows the Archaic and is typically divided into five periods that include Basketmaker II, Basketmaker III, Pueblo I, Pueblo II, and Pueblo III (Lyneis 1995). The Basketmaker period (300 B.C. to A.D. 800) is defined by an increased reliance upon agriculture and permanent pit house villages. Domesticated crops became important and were used in conjunction with wild plant resources. Early sites from this period are

characterized by small hamlets that contain oval to round pit houses. Toward the end of the period, habitation structures evolved into larger, deeper structures with internal hearths and wing walls. Other identified site types dating to this period include field houses, procurement sites, and campsites. Basketmaker II sites (300 B.C. to A.D. 400) are part of a pre-ceramic farming culture that extends across southern Utah, northern Arizona, and the southwestern corner of Colorado. Increased sedentism during Basketmaker II is evident from pit house construction that entailed circular or oval plans. Intramural features include ventilator shafts, hearths, postholes, benches, and lateral entries. Extramural roasting pits and slab-lined pits are known, but not universal. Subsistence foods include corn and squash, but collected food resources remain common. Pottery was not produced and reliance upon coiled baskets for containers gives the period its name. Basin milling stones, one-hand cobble manos, and Gypsum and Elko Side- and Corner-notched points are typically found in Basketmaker II sites.

Basketmaker III sites (A.D. 400 to 800) differ from the preceding period with the addition of plain ware ceramics and some carbon-painted pottery. Increased reliance upon horticulture is inferred from the greater number of structures found at sites, more storage facilities, and preference for trough metates. Sites tend to be located along mesa rims, probably in association with collected resources, while arable land in the valley bottoms was usually more distant, but equally important for food production. Gray ware pottery appears to have been locally produced. The bow and arrow replaces the atlatl during this period, as indicated by smaller Eastgate Expanding-stem and Rose Spring Side- and Corner-notched projectile points. Two-handed manos and trough metates replace earlier use of one-hand manos and basin metates.

The succeeding Pueblo period is divided into Pueblo I (A.D. 800 to 1000), Pueblo II (A.D. 1000 to 1150), and Pueblo III (A.D. 1150 to 1200/1250). Information about the westernmost Anasazi groups relies to a great extent upon excavations conducted in the Moapa and Virgin River valleys. Pueblo period populations are described as Virgin Anasazi and probably represent descendants of Basketmaker III populations. Settlement probably was focused in the uplands during the colder months, while populations would have moved to lower elevations in the spring (Dalley and McFadden 1985; Powell 1983). Projectile points during Pueblo I period were typically thin and well made (i.e., Eastgate Expanding-stem). During the Pueblo II period, occupation is limited to the margins of the Virgin River and its tributaries (Lyneis 1996). Sites contain numerous household groups that maintained distinct storage areas; evidence of community facilities is scarce (Lyneis 1992). Pueblo III (A.D. 1150 to 1200/1250) represents a significant change, with the area generally depopulated by Pueblo groups sometime after A.D. 1150 (Aikens 1966; Effland et al. 1981; Euler and Chandler 1978) or possibly as late as A.D. 1175 (Lyneis 1996). Other researchers have argued that some Pueblo III populations remained in the area until A.D. 1200 (ones 1986), or possibly as late as A.D. 1250 (Allison 1996; Walling et al. 1986; Westfall 1987).

The post-Pueblo occupation (post-A.D. 1150/1250) is referred to as the Late Prehistoric period and is characterized by the appearance of Numic-speaking (Ute and Paiute) populations in the region. There are a number of theories as to how the Southern Paiute people arrived in the area, with Ambler and Sutton (1986) suggesting that these groups filled a void created by the depopulation of the Anasazi. Southern Paiute oral traditions suggest that Numic-speaking groups were responsible for eliminating the Anasazi, possibly as early as A.D. 1000 (Heizer 1954). Archaeological support for this event, however, is lacking. The Numic-speaking groups utilized an economic strategy similar to that of the Archaic period, employing a mobile lifestyle that relied on seasonably available resources in various environments. Similar to the Archaic period, sites are characterized by artifact scatters but with occasional plain and incised gray ware ceramics that are generally crude and coarse in design. Desert Side-notched and Cottonwood Triangular projectile points are characteristic of this period. Ethnographically known Numic-speaking groups (namely the various bands of Southern Paiute) were present in the area at time of historic contact.

Accounts claim that the first Euro-American to enter the region was Rafael Rivera, who discovered the Las Vegas and Cottonwood springs while scouting ahead for the creation of the Spanish Trail – now known as the Old Spanish National Historic Trail (City of Las Vegas 2013; Moehring and Green 2005). The Spanish Trail served as the primary trade route between Santa Fe, New Mexico and Los Angeles, California from around 1830 to 1850.

The Old Spanish Trail was primarily a horse and burro pack route between Santa Fe and Los Angeles, which developed partly from a network of American Indian and Hispanic trade routes. In 1829, Mexican trader Antonio Armijo was the first to lead a trade caravan from Abiquiu, New Mexico, all the way to Los Angeles on what became the Old Spanish Trail. He traded serapes and other New Mexican goods for horses and mules. Over the next 20 years, Mexican and American traders continued to ply variants of the route that Armijo pioneered, frequently trading with Indian tribes along the way. The current designation of the Trail is discussed in section 3.9.2.

Las Vegas Spring was an important stopover along the Spanish Trail and the site was first mapped by Captain John C. Fremont and his survey crew of topographical engineers in 1844 (Moehring and Green 2005). The route was later incorporated into the Mormon Trail that connected Salt Lake City, Utah with the Mormon outpost at San Bernardino, California. Up until 1855, this important stopover was uninhabited. In 1855, the Mormons established the Las Vegas mission that included an adobe fort, 5-acre farm plots, and a lead mine and smelter at Potosi Mountain. The mission failed and was abandoned in 1858 (Moehring and Green 2005).

In 1865, the remaining infrastructure of the settlement was acquired by Octavius Decatur Gass, who re-established “Las Vegas Rancho” as a commercial hub along the Old Spanish Trail from which to supply goods to mining camps in the area (Moehring 2000). Mineral

discoveries made in the Meadow and Pahrangat valleys in the late 1860s and early 1870s to the north of the Las Vegas Rancho were relatively short-lived, however the influx of miners to the area drastically reduced available natural resources in an area historically inhabited by the Moapa Band of Paiutes. Tensions between the Moapa and Euro-American miners and settlers led the United States government to set aside two million acres of land to create a reservation for the Moapa in 1874. However, the size of the reservation was drastically reduced to one thousand acres in 1876 and it was not until the latter part of the twentieth century that the reservation was expanded to include more than 70,000 acres of land (Moapa Paiutes 2014; O'Neil n.d).

Las Vegas Rancho owner Octavius Gass defaulted on debts in 1882 and his property was subsequently acquired by Archibald and Helen Stewart. Although Archibald died soon thereafter, Helen continued to operate the ranch until 1902 when she sold the property to Montana Senator William Clark whose intention was to establish a railroad line connecting Salt Lake City, Utah to Los Angeles, California via the Las Vegas Valley. The line (later acquired by the Union Pacific Railroad Company) was completed through Las Vegas in 1904 and resulted in the formal development of a townsite (Moehring 2000).

The development of Hoover dam to the east of Las Vegas in the 1930s brought growth to the Las Vegas area. While the completion of the dam in 1935 resulted in an economic decline, the World War II era led to even more dramatic growth in the region (Stevens 1988). In the two years spanning 1940 and 1942, both a military training facility and a massive industrial plant were developed on the periphery of the city. The Las Vegas Armory Air Force Gunnery School was completed to the northeast of the city and began instructing military personnel in 1941 and the Basic Magnesium plant was completed to the southeast of Las Vegas in 1942. Additionally, Camp Sibert, a small marine base near Boulder City, and the Desert Warfare Center, a training facility located south of Searchlight, Nevada were developed during this time period resulting in an influx of thousands of military and civilian personnel to the region (Moehring and Green 2005). The growth of military and commercial industries during the World War II period set the Las Vegas area on a path of rapid postwar growth which continued into the early twenty-first century.

3.9.2 Historic, Cultural, and Religious Properties

This section briefly discusses the past cultural resource investigations that have been conducted in the area and the known cultural resource sites that have been documented in the general area of the Proposed Project. Chapter 4 will discuss potential impacts to current cultural or religious properties and prehistoric or historic cultural sites that may qualify as historic properties. Historic properties are districts, sites, buildings, structures, or objects that possess integrity of location, design, setting, materials, workmanship, feeling, and association and that are currently listed on the National Register of Historic Places (NRHP) or are potentially eligible for listing. Districts, sites, buildings, or structures that are listed or

eligible for listing may include components that do not support or contribute to that eligibility. These non-contributing components may be associated with or may be parts of a historic property, but are not considered significant and are not considered historic properties. Under the regulations implementing Section 106 of the National Historic Preservation Act (36 CFR 800), any Federal undertaking (an undertaking involving federally administered lands, funds, approval, permits, or oversight) must consider potential impacts to historic properties.

The area of potential effect (APE) for cultural resources is defined as the area within which resources could be affected by the Proposed Project. The APE for direct effects included all project components (solar field lease area and ROWs as shown in **Figure 2-1**) and the APE for indirect effects included a 5-mile radius around the direct effects APE. Cultural resource studies were conducted that consisted of both Class I and Class III investigations. The Class I investigation entailed a review of local histories, examination of historic maps, and a review of previous inventory and field survey efforts. The Class I survey area covered the 5-mile indirect effects APE.

The Class I study revealed that 21 cultural resource investigations have been completed in the direct effects APE. These previous investigations recorded 25 sites. An additional 81 studies of various sizes have been completed (along with 473 previously recorded sites) within a five-mile radius comprising the indirect effects APE. These previous studies serve as a baseline of the types of sites that have been identified in the area.

The Class III investigation was aimed at locating and recording all historic properties that have surface and exposed-profile indications in the direct effects APE. This was accomplished through systematic pedestrian inspection of the 1,190 acres comprising the direct effects APE using parallel transects spaced no more than 30 meters apart. The investigation did not include subsurface testing.

The Proposed Project is located mainly on the Moapa River Indian Reservation which was established in the early 1870s. The Proposed Project location does not contain sites or resources identified by the Tribe as having historic, cultural, or religious significance. There are no documented existing historic buildings within the Project Area's direct effects APE. Existing historic structures within the direct effects APE are limited to the Union-Pacific Railroad (26CK4429/26CK5685), an unnamed road (26CK9978), and a pre-World War II Camp (26CK1147).

In 1993, a bill was introduced authorizing the NPS to study the feasibility of including the Old Spanish Trail in the National Trails System as a National Historic Trail. In 1996, the Old Spanish Trail feasibility study was authorized and in July 2001, the NPS issued a final feasibility study that concluded the Old Spanish Trail is "nationally significant within the theme of the Changing Role of the United States in the World Community and the topics of trade and commerce, during the period of 1829-1848."

Early in 2002, the Old Spanish Trail Recognition Act was passed by Congress and the preparation of a Comprehensive Management Plan was assigned to both the BLM and NPS with both agencies working together to manage the Old Spanish National Historic Trail (OSNHT).

The Old Spanish Trail/Mormon Wagon Road (26CK3848) is located to the south and east of the Project Area and the designated location of the OSNHT, as defined by 16 USC 1251, is located to the south and east of the Project Area as well. Segments of both of these historic trails fall within the indirect effects APE.

A complete Class I records search was conducted in January and February of 2015. A Class III intensive pedestrian inventory/survey of the direct effects APE of the Proposed Project was conducted in February, March, and April of 2015. The cultural resources inventory documented 87 cultural resource sites and 135 isolated artifacts within the 1,190-acre direct effects APE. Fifteen of the identified archaeological sites have been initially evaluated as eligible for listing on the NRHP.

The 87 archaeological sites are described in **Table 3-11** below. Fifty of the sites are prehistoric in age and include lithic scatters and rock rings. Twenty-four sites are historic in age and include trash scatters, roads, trails, a communications site, a railroad, and pre-World War II camp. Thirteen of the sites are multicomponent (historic and prehistoric) and include prehistoric lithic and ceramic scatters, rock rings, and trash scatters.

Table 3-11
ARCHAEOLOGICAL SITES IN THE PROJECT AREA AND NRHP RECOMMENDATIONS

Field Site No.	SHPO Site No.	Site Type	NRHP Recommendations
Sites 1, 2, & 3		Multicomponent site consisting of a prehistoric lithic and ceramic scatter, 8 rock rings, and historic trash	Eligible
Site 4		Prehistoric lithics with a rock ring and possible basket rest	Eligible
Site 6		Historic trash scatter	Not eligible
Site 7		Historic trash and a flake	Not eligible
Site 8		Historic trash scatter and large machine dug pit	Not eligible
Sites 9 & 10		Prehistoric lithic scatter	Not eligible
Site 13 & 14		Multicomponent site consisting of prehistoric lithics and historic trash	Not eligible
Sites 15, 17, 18, & 19		Prehistoric lithic scatter with three rock rings and historic bottle break	Eligible
Site 20		Prehistoric lithic scatter	Not eligible
Site 22		Historic communications site (completely dismantled radio tower/navigational beacon) driveway, pads, tie downs/anchors, with historic trash	Eligible

Table 3-11
ARCHAEOLOGICAL SITES IN THE PROJECT AREA AND NRHP RECOMMENDATIONS

Field Site No.	SHPO Site No.	Site Type	NRHP Recommendations
Site 23		Multicomponent site with several loci of historic trash and few prehistoric artifacts	Not eligible
Site 23A		Multicomponent site with historic trash dump and small prehistoric lithic scatter	Not eligible
Sites 23B, 41, & 54		Multicomponent site with prehistoric lithics and historic trash	Not eligible
Site 25		Historic trash scatter	Not eligible
Site 27		Two tested cobbles	Not eligible
Site 28		Historic trash scatter	Not eligible
Site 29, 30, & 31		Multicomponent site consisting of historic trash and prehistoric lithics	Not eligible
Site 35		Multicomponent site consisting of historic trash and prehistoric lithics	Not eligible
Sites 37, 39, 40, and 40A		Multicomponent site consisting of historic trash and prehistoric lithics	Not eligible
Site 38		Historic trash	Not eligible
Site 42		Prehistoric lithic scatter with 2 rock rings	Eligible
Site 43		Lithic scatter and 2, possibly 3 rock rings	Eligible
Site 44, 45, 46, 47, 48, & 58		Multicomponent site with prehistoric lithics, 2 rock rings, and historic trash	Eligible
Site 49		Possible historic school trail	Eligible
Sites 50, 55, 56, & 57		Multicomponent site with a prehistoric lithic scatter, 2 rock rings, a flaking station, and historic trash	Eligible
Site 51		Historic trash scatter	Not eligible
Site 53		Prehistoric lithic scatter	Not eligible
Site 60		Historic trash scatter	Not eligible
Site 62	CK3405	Lithic scatter – previously partially collected	Not eligible
Site 64		Historic trash scatter	Not eligible
Site 65		Historic trash scatter	Not eligible
Site 66		Historic trash scatter and 1 flake	Not eligible
Sites 67, 72, & 73		Multicomponent site consisting of prehistoric lithics and historic trash	Not eligible
Site 68		Prehistoric lithic scatter with 2 flaking stations	Not eligible
Site 75 & 81		Prehistoric lithic scatter	Not eligible
Site 79		Prehistoric lithic scatter	Not eligible
Site 80		Prehistoric lithic scatter	Not eligible
Site 82		Prehistoric lithic scatter	Not eligible
Site 83, 84, 85, 86, 87, 88, & 94		Prehistoric lithic scatter	Not eligible
Site 92 & 97		Prehistoric lithic scatter	Not eligible
Site 93		Prehistoric lithic scatter	Not eligible
Site 95A		Prehistoric lithic scatter	Not eligible
Site 95B		Prehistoric lithic scatter	Not eligible
Site 98		Prehistoric lithic scatter	Not eligible
Site 99, 100, 102, 106, & 108		Prehistoric lithic scatter, and a rock ring	Eligible
Site 104		Prehistoric lithic scatter	Not eligible
Site 107		Prehistoric flakes	Not eligible
Site 109		Prehistoric lithic scatter	Not eligible
Site 110		Prehistoric lithic scatter	Not eligible
Site 111		Prehistoric flakes	Not eligible
Site 117		Prehistoric flakes	Not eligible

Table 3-11
ARCHAEOLOGICAL SITES IN THE PROJECT AREA AND NRHP RECOMMENDATIONS

Field Site No.	SHPO Site No.	Site Type	NRHP Recommendations
Site 118		Historic trash scatter	Not eligible
Site 119		Prehistoric lithic scatter and two rock rings	Eligible
Site 120		Historic trash scatter and a flake	Not eligible
Site 121		Prehistoric lithic scatter	Not eligible
Site 123 127, & 128		Prehistoric lithic scatter	Not eligible
Sites 124 & 125		Prehistoric lithic scatter with a flaking station	Not eligible
Site 130 & 130A		Prehistoric lithic scatter and historic trash	Not eligible
Site 131		Historic trash scatter	Not eligible
Site 132		Prehistoric lithic scatter	Not eligible
Site 134, 135, 152, 153, 159, 160, 165, & 166		Prehistoric lithic scatter and possible historic Post Office trail segment with associated trash	Eligible
Site 134A,		Possible historic Moapa trail (possibly continuation of school trail – 49)	Eligible
Site 150 & 150A		Prehistoric lithic scatter	Not eligible
Site 138		Prehistoric lithic scatter	Not eligible
Site 142		Prehistoric lithic scatter	Not eligible
Site 145 & 149		Prehistoric lithic scatter	Not eligible
Site 146 & 148		Prehistoric lithic scatter	Not eligible
Site 147		Prehistoric lithic scatter	Not eligible
Site 151, 162, 163, & 163A	CK3406	Prehistoric lithic scatter	Not eligible
Site 155		Prehistoric lithic scatter	Not eligible
Site 157 & 158, 167, 167B, & 168A		Prehistoric lithic scatter	Not eligible
Site 161		Prehistoric lithic scatter	Not eligible
Site 164 & 164A		Multicomponent site with a prehistoric lithic scatter and historic trash	Not eligible
Site 166A		Prehistoric lithic scatter	Not eligible
Site 167A		Prehistoric lithic scatter	Not eligible
Site 168		Historic trash scatter (beer cans)	Not eligible
Site 169		Prehistoric flake scatter	Not eligible
Site 170		Historic trash scatter	Not eligible
Site 201		Prehistoric lithic scatter	Not eligible
Site 209		Prehistoric lithic scatter	Not eligible
Site 210		Prehistoric lithic scatter	Not eligible
Site 211	CK9561 CK9568	Historic trash scatter	Not eligible
Site 212	CK9559	Historic trash scatter	Not eligible
Site 213, 214, & 215	CK9569 CK9570 CK9571	Multicomponent site consisting of prehistoric lithics and historic trash	Not eligible
North/South Road		Historic Road and associated artifacts	Eligible
	CK4429/5685	Union Pacific Railroad	Eligible
	CK1147	Historic World War II Camp	Eligible

3.9.3 Tribal Consultation

Prior to the Class III survey of the Proposed Project direct effects APE, the BIA coordinated with the Moapa Paiute Tribe to discuss proposed survey methods and arrangements for tribal members to accompany the archaeologists during the survey.

The BIA sent letters to eight Tribes in the region inquiring if there were any concerns about the effects of the Proposed Project on historic properties or areas of traditional or cultural importance. These Tribes included the Las Vegas Paiute Tribe, Kaibab Band of Paiute Indians, Hualapai Indian Tribe, Fort Mojave Indian Tribe, Hopi Tribe, Colorado River Indian Tribes, Chemehuevi Indian Tribe, and Paiute Indian Tribe of Utah. **Appendix G** contains the Cultural Resource report citation and consultation letters with the SHPO and tribes.

The Chemehuevi Indian Tribe responded verbally and expressed no concerns with the project's effects on cultural resources. The Hopi Tribe responded by letter (**Appendix G)** requesting a copy of the survey report and draft treatment plans if it is determined that prehistoric sites could be adversely affected. They also recommended that project activities stop and the SHPO be contacted if cultural features are found during project activities and that any Native American remains or funerary objects found be reported immediately as required. The Hopi Tribe's recommendations are incorporated in the mitigation measures outlined in section 5.5.

3.10 Socioeconomic Conditions

This section describes the existing socioeconomic conditions and environmental justice populations within the Proposed Project area. These conditions focus on population and employment/unemployment, demographics, housing supply, social and public services, and recreation opportunities. Data from the U.S. Census Bureau's 2010 Census of Population and Housing as presented in the U.S Census Bureau's American Fact Finder 2009 – 2013 estimates were used for preparation of this section.

The Proposed Project would be located on undeveloped lands on the Reservation, near Moapa Town, Nevada. The Project area is within the census geographies (census tract [CT]) CT 59.02, as is all of the Reservation. The Proposed Project is locate8**6**).

Moapa Town is a census-designated place (CDP) in Clark County. A CDP is a concentration of population that lacks separate municipal government but is identified by the United States Census Bureau for statistical purposes as counterparts of incorporated places such as cities, towns, and villages.

Socioeconomic information is also provided for Clark County since it physically borders the Reservation and because some of the labor and materials employed in the construction of the Proposed Project would be sourced from the surrounding Clark County area.

3.10.1 Employment and Income

According to U.S. Census Bureau data, in 2010 there were 1,015 people, 319 households, and 269 families residing in the Moapa Town CDP and there were 1,391 people, 470 households, and 363 families residing in CT 59.02 (Reservation). The population density was 6.8 people per square mile. There were 543 housing units at an average density of 4.5 housing units per square mile. In Moapa Town there were 319 households out of which 56.1 percent had children under the age of 18 living with them, 73.3 percent were married couples living together, 5.3 percent had a female householder with no husband present, and 15.7 percent were non-families. Approximately 14.4 percent of all households were made up of individuals and 9.4 percent had someone living alone who was 65 years of age or older. The average household size was 3.21 and the average family size was 3.56.

In CT 59.02 (Reservation), there were 470 households out of which 56.2 percent had children under the age of 18 living with them, 58.9 percent were married couples living together, 12.1 percent had a female householder with no husband present, and 22.8 percent were non-families. In addition, 20.6 percent of all households were made up of individuals and 8.2 percent had someone living alone who was 65 years of age or older. The average household size was 3.05 and the average family size was 3.55.

In the CDP, the population was spread out with 34.9 percent under the age of 18, 8.3 percent from 15 to 19, 3.7 percent from 20 to 24, 25.6 percent from 25 to 44, 24.5 percent from 45 to 64, and 9.0 percent who were 65 years of age or older. The median age was 31.8 years. There were 49.5 percent females and 50.4 percent males overall. There were 49.3 percent females and 50.6 percent males for those 18 or older.

Table 3-12 shows the median household income and percentage of the population living in poverty according to estimates for 2013 for the geographic comparison areas. In 2013, the estimated median household incomes for the United States, Nevada, and Clark County were similar at $53,046, $52,800, and $52,873, respectively. The median income for a household in the Moapa Town was $39,485 and the median income for a household in the CT 59.02 was $38,512.

CT 59.02 had 14.2 percent living below poverty level, Moapa Town had 9.6 percent below poverty line, Clark County had 15.1 percent living below poverty level, and the State of Nevada had a 15 percent poverty rate. These are all lower than the national poverty status of 15.4 percent. Within the study area income data supports the conclusion that there are no environmental justice communities defined by income. Native American persons residing on

the Reservation and within the Proposed Project area are considered an eligible environmental justice community as defined by Executive Order 12898.

Clark County median ($52,873) and per capita ($26,217) annual incomes are below the U.S. average, and 15.1 percent of the individuals within the county have incomes that are below the poverty level threshold. According to the US Census Bureau, an impoverished community is defined as one in which more than 20 percent of the population is below the poverty level. For a single person (not a family) the poverty income threshold is $11,670. For a family of four with two children under the age of 18, the poverty income threshold is $23,850. Moapa Town, CT 59.02 Moapa Indian Reservation, CT 56.13, and Clark County's mean incomes are above the current 2014 Department of Health and Human Services poverty threshold.

The Clark County economy is heavily dependent on the leisure and hospitality sector, as well as closely linked supporting sectors in arts, entertainment, and retail trade establishments. In addition, hotel and resort renovation, development, and expansion within Las Vegas have traditionally been a mainstay of the Clark County economy. **Table 3-13** shows the distribution of employment by industry within Clark County, FY 2013.

TABLE 3-12
POVERTY LEVEL AND MEDIAN HOUSEHOLD INCOME (ESTIMATES) IN 2013

Geographic Area	Median Household Income	Population*	Income Below Poverty Level	Percent Below Poverty Level
United States	$ 53,046	316,128,839	48,683,841	15.4%
State of Nevada	$ 52,800	2,790,136	418,520	15%
Clark County, Nevada	$ 52,873	2,027,868	306,208	15.1%
Moapa Town	$ 39,485	1,015	98	9.6%
CT 59.02 Moapa Indian Reservation	$ 38,512	1,391	198	14.2%

Source: U.S. Census 2010 2009-2013 American Community Survey
*Population for whom poverty status is determined

TABLE 3-13 EMPLOYMENT BY INDUSTRY IN FY 2013					
Industry	**Nevada**	**Clark County**	**Moapa Town**	**CT 56.13**	**Moapa Reservation, CT 59.02**
Total All Industries	1,229,604	894,854	330	1,729	458
Agriculture, forestry, fishing, and hunting, and mining	20,534	3,032	0	34	0
Construction	79,759	57,904	16	116	18
Manufacturing	50,594	28,528	79	78	79
Wholesale trade	25,557	16,533	0	20	0
Retail Trade	144,770	105,817	18	216	42
Transportation and warehousing, and utilities	61,084	43,232	0	180	26
Information	20,511	14,836	26	41	33
Finance, insurance, real estate, and rental and leasing	70,049	53,203	19	66	21
Professional, scientific, management, administrative, and waste management	131,038	98,838	73	127	73
Education, health and social services	192,047	131,787	38	285	51
Arts, entertainment, recreation, accommodation and food services	315,554	262,742	37	302	44
Other services (except public administration)	56,750	41,092	8	78	11
Public administration	60,977	37,310	16	186	60

Source: U.S. Census 2010 2009-2013 American Community Survey

3.10.2 Unemployment

Table 3-14 shows the comparison between the various state, regional and local unemployment rates in 2013 as well as total reported labor force. The unemployment rate for the Reservation and Moapa Town is approximately 7 percent higher than that for Clark County and the State of Nevada.

TABLE 3-14 UNEMPLOYMENT RATES					
	Nevada	**Clark County, Nevada**	**Moapa Town CDP, Nevada**	**Census Tract 56.13**	**Census Tract 59.02**
Labor Force	1,404,746	1,024,824	410	1,938	563
Employed	1,229,152	894,671	330	1,729	458
Unemployed	175,593	130,152	80	209	105
Unemployment Rate	12.5	12.7	19.5	10.8	18.7

Source: Census Bureau 2009-2013 American Community Survey 5-Year Estimates

3.10.3 Demographic Trends

Between 2000 and 2007 Clark County grew rapidly, in line with the growth experienced by the metropolitan Las Vegas area. However, due to the economic downturn, growth slowed dramatically from 2008 to 2011, including two years with negative growth. The growth rate has been approximately 2 percent per year since 2012, and that rate is expected to continue through 2015. From 2016 through 2050 population growth rates are projected to decrease to approximately 1 percent per year. Nevada demographers expect that Clark County's population will increase to 2.4 million by 2025 and rise to 2.6 million by 2031 (University of Las Vegas, Center for Business and Economic Research 2014).

3.10.3.1 Environmental Justice

Executive Order 12898 (Federal Actions to Address Environmental Justice in Minority Populations and Low-Income Populations) requires all Federal agencies to assess whether their programs, policies, and activities have disproportionately high and adverse human health or environmental effects on minority and low-income populations in the United States. The criteria for a finding of possible environmental justice issues is the occurrence of more than 50 percent of the population affected by the Proposed Action being minority or low-income. Data was collected on the income and poverty status of the populations within the census tracts where the Proposed Project is located.

For the purposes of the analysis of environmental justice, minority refers to anyone who is racially classified as African American, Asian American, Native American or Alaskan Native, or Pacific Islander, anyone who self- classifies as "other" race, or two or more races, or anyone classified as Hispanic. Hispanic is considered an ethnicity, not a separate race; Hispanics are considered minorities regardless of their racial self-affiliation. A minority population is identified when the minority population of the potentially affected area is greater than 50 percent or meaningfully greater than the percentage of the minority population in the general population or other appropriate unit of geographical analysis. Low

income is determined by a set of money-income thresholds that varies by family size and composition. If the total income for a family or unrelated individual falls below the relevant poverty threshold, then the family or unrelated individual is classified as low- income or "below the poverty level" at the time of the census.

The percent Hispanic or Latino of total population of the United States, Nevada, and Clark County is 16.6 percent, 26.8 percent, and 29.4 percent, respectively. Of the minority population in the United States, Nevada, and Clark County, the percent of the minority population that is American Indian or Alaska Native alone is 0.8 percent, 0.12 percent, and 0.14 percent, respectively.

The residents on the Reservation are the closest environmental justice population to the Proposed Project. As Native Americans, the residents on the Reservation meet the criteria of a minority population and thus are subject to environmental justice consideration under the Executive Order.

Reference areas were identified to compare larger geographic areas with census blocks groups for the Proposed Project vicinity to determine whether populations residing in the affected area constitute a potential environmental justice population. The reference area is north Clark County. The most current data available at the census block level were from Fiscal Year 2010. Data for the census tract block groups were compared with the data for Clark County, the State of Nevada, and the nation to assess whether minority, elderly, low-income, disabled, or female head-of-household populations are disproportionately represented in the Proposed Project vicinity. **Table 3-15** summarizes the racial/ethnic populations in each of these areas.

The Project is located on the Reservation, and the Reservation community is 45.1 percent minorities.

3.10.3.2 Indian Trust Assets

Federally-recognized Indian tribes are domestic, sovereign nations, and the relationship between the Federal government and those tribes is characterized as one of trustee. As part of this role, the Federal government is obligated to protect tribal interests, a duty that is referred to as trust responsibility. This trust doctrine is defined through treaties, laws, executive orders, judicial decisions, and agreements.

Indian Trust Assets (ITA) are legal interests in property held in trust by the United States for federally recognized Indian tribes or individual Indians, or property the United States is charged to protect by law. Examples of resources that are ITAs include lands, minerals, hunting and fishing rights, and water rights. Department of the Interior Order 3175 requires that (1) agencies are to consult with Indian tribes when trust property may be affected, and

(2) environmental and planning documents should “clearly state the rationale for the recommended decision will be consistent with the Department’s trust responsibilities.” ITAs should be considered and identified early in the NEPA process. ITA identification should involve consultation with (1) potentially affected tribes, Indian organizations or individuals, and (2) the BIA, the Office of American Indian Trust, the Solicitor’s Office, BLM, or the Regional Native American Affairs Coordinator, all of which are in the Department of the Interior.

3.10.4 Lifestyle and Cultural Values

The Moapa People were a culturally well-adapted people who combined farming with hunting and gathering. They used the resources of the land with great ingenuity. Most of the domestic objects of their ancestors were various forms of intricately designed basketry, including water jars, winnowing and parching trays, cradle boards, cooking baskets, and seed beaters. They had great skill in the use of animal skins and plants. Their knowledge of nutritional and medicinal uses of plants was extensive (Moapa Paiutes, n.d.).

Until recently, the Tribe’s primary business enterprise centered on the Travel Plaza, which includes a casino, convenience store, cafe, gas station, and firework store. New solar projects (one under construction, one approved awaiting construction, and the Proposed Project) offer the Tribe an opportunity to expand economic development while holding fast to Tribal values for respect and care for tribal land.

3.10.5 Limited English Proficiency

Executive Order 13166 "Improving Access to Services for Persons with Limited English Proficiency" requires all recipients of Federal funds to provide meaningful access to persons who are limited in their English proficiency (LEP). The US Department of Justice defines LEP individuals as those "who do not speak English as their primary language and who have a limited ability to read, write, speak, or understand English" (67 FR 41459). Data about LEP populations were gathered from the 2009-2013 American Community Survey 5-Year Estimates.

Within census tracts, cities and counties, the census records the presence of persons who describe their ability to speak English as less than "Very Well." **Table 3-16** shows the number of adults who speak English less than "Very Well" by language category for Nevada, Clark County CT 56.13, Moapa Reservation CT 59.02, and Moapa Town. Additionally, Moapa Reservation CT 59.02 has 117 individuals (over the age of 5) or 9.1 percent and Moapa Town has 116 individuals (over the age of 5) or 12.4 percent that reported to the census that they spoke English less than “Very Well.” Thus, Census data indicate the presence of LEP populations.

Sixteen percent of the people living in Moapa Town CDP in 2009-2013 were foreign born. Eighty-four percent were native, including 40 percent who were born in Nevada. Among people at least five years old living in Moapa Town CDP in 2009-2013, 25 percent spoke a language other than English at home. Of those speaking a language other than English at home, 100 percent spoke Spanish.

A review of the area did not reveal the use of any language but English on billboards, signs or placards.

Even though the Proposed Project is not scheduled to receive Federal funding, since English and Spanish are the dominant language within the local area, any notices for public involvement will be in English and Spanish translation will be provided if needed

3.10.6 Community Infrastructure / Public Services

This section describes the existing public infrastructure resources in the Project area. Topics include libraries, parks and recreation, schools, public health and safety (police, fire, and emergency medical services), solid waste, and water/septic.

Libraries
The Las Vegas-Clark County Library District provides library services for northeast Clark County. The library district is funded through property taxes, sales taxes, and user fees. The Library District serves northeast Clark County with four libraries, one of which is located in Moapa Town.

Parks and Recreation
Clark County Department of Parks and Recreation provides a system of public parks, recreation and open space facilities throughout Clark County. The Moapa Recreation and Community Center is located on SR 168 in Moapa Town. . Amenities include a community center, recreation center, a spray pad, neighborhood park (Ron Lewis Park), lighted softball field, and pavilion.

Schools
Clark County School District provides public education services to the county. Northeast Clark County is served by two high schools, two middle schools, and three elementary schools. Ute Perkins Elementary School is located in Moapa Town.

Fire Protection
The Clark County Fire Department provides fire protection and emergency medical response to northeast Clark County with five fire stations manned by volunteer firefighters. The closest of the five stations is Fire Station 72, located in Moapa Town.

TABLE 3-15
POPULATION BY RACE 2010 CENSUS

AREA	Total	White	Hispanic Or Latino	Black or African American	American Indian/ Alaska Native	Asian	Native Hawaiian/ Other Pacific Islander	Other	Two or More Races	Percent Minority
United States	311,536,594	197,050,418	51,786,591	38,093,998	2,061,752	15,061,411	488,646	606,356	6,387,422	36.7
Nevada	2,730,066	1,457,795	734,097	216,109	24,313	199,106	16,174	4,228	108,275	46.6
Clark County	1,976,925	933,731	582,084	201,993	8,499	172,200	12,989	3,539	61,890	52.8
Moapa Town	1,015	694	308	0	13	0	0	0	0	31.6
Tract 59.02	1,391	764	333	0	274	7	4	2	7	45.1
Tract 56.13	4,488	3,752	529	192	14	1	0	0	0	16.4

2009-2013American Community Survey 5-Year Estimates.

TABLE 3-16 NUMBER OF ADULTS WHO SPEAK ENGLISH LESS THAN VERY WELL*					
Household Language	**Nevada**	**Clark County**	**CT 56.13**	**Moapa Reservation CT 59.02**	**Moapa Town**
Total Adults over 5	2,546,528	1,840,196	4,142	1,280	936
English only	1,799,141 70.7%	1,239,898 65.4%	3,977 96%	1,033 80.7%	704 75%
Speak English less than "very well"	317,113 12.5%	251,753 13.3%	43 1%	117 9.1%	116 12.3%
Spanish	517,933 20.3%	441,172 23.3%	157 3.8%	241 18.8%	232 24.7%
Other languages	229,454 9%	213,786 11.6%	8 0.2%	6 .05%	0

Data Source: 2009-2013 American Community Survey 5-Year Estimates.
* The data on ability to speak English represent the Census respondent's own perception about his or her ability to speak English.

Police

Las Vegas Metropolitan Police Department is responsible for providing police protection in northeast Clark County. The Police Department has a Resident Officer Program serving the communities of Bunkerville, Moapa Town/Glendale, and Moapa Valley with approximately eight officers. A command station is located in Overton. The Police Department works cooperatively with other law enforcement agencies in and around northeast Clark County. The Nevada Highway Patrol enforces traffic regulations on state routes in northeast Clark County and BLM rangers patrol Federal lands in the Bureau's jurisdiction.

Moapa Tribal Police Department stationed on the Reservation patrols Reservation lands, roads, and all activities within the Reservation twenty-four hours a day. A staff of fourteen - six dispatchers, one Chief, one Sargent and six officers - are employed at the station.

Hospitals

Health care is offered within the Reservation business area. Care is offered in cooperation with Indian Health Services. The health-care facility offers immunization, women and infant care, routine health screening, and a rabies clinic. Some emergency care can also be provided. Mesa View Regional Hospital in Mesquite, NV and North Vista Hospital in North Las Vegas, NV

(approximately 30 miles northeast and 40 miles southwest, respectively) are the closest acute and critical care hospitals that can provide emergency services.

Solid Waste Disposal

In Moapa Town, solid waste is collected curbside weekly by Republic Services. The waste goes to the APEX Regional Waste Management Center located in the northeast portion of Clark County. There is also a convenience center for residents to deposit large items at 5205 N. Moapa Valley Boulevard, serving Moapa Town. Twenty-one facilities are currently engaged in commercial disposal of RCRA Subtitle C hazardous waste in the nation. The nearest hazardous waste facility to the Proposed Project is located 120 miles due west in Beatty, NV.

The Tribe also has a mulching facility near the southern Reservation boundary. This facility handles organic wastes and has been in operation for the past 5 to 6 years.

Water and Septic

The Moapa Valley Water District provides water service to Moapa Town, Warm Springs, Logandale, and Overton and the Project area. Properties outside a service provider's areas may apply for individual water well permits from the Nevada Division of Water Resources (NDWR).

Most areas in northeast Clark County with development rely on septic tank systems, or in recent years, some new construction has used package treatment plants for waste water treatment. The Southern Nevada Health District regulates individual residential and commercial sewage disposal systems.

3.11 Land/Resource Use

3.11.1 Planned Land Uses

The majority of the Proposed Project would be located on Tribal lands at the northern-most part of the Moapa River Indian Reservation. The Proposed Project site is located in an area predefined by the Tribe for economic development and is located on a bench approximately 200 feet above the community of Moapa Town. These lands are currently vacant except for roads (State Highway 168, Reservation Road, and Lyttle Lane), pipelines, and transmission line ROWs.

The proposed gen-tie that would interconnect the proposed solar generating facility to the regional electrical grid would cross BLM-administered lands south of the solar site. These federal lands are crossed by many existing utility lines and portions of designated corridors containing several electrical transmission lines connecting to the Reid-Gardner Substation (230kV NVE Harry Allen-Reid Gardner #1 and #2, 345kV NVE Harry Allen-Red Butte, 500kV NVE Crystal-Navajo, and 500kV IPP HVDC Intermountain), and natural gas pipelines owned by Kern River Gas Transmission. The utility corridors are designed for co-location utilities and are

managed by the BLM. **Figure 3-9** shows the locations of the corridors relative to the Proposed Project. In addition, this area of BLM land also includes the Union Pacific railroad.

The Reid-Gardner Generating Station which is in the process of being shut down is located adjacent to the Reid-Gardner Substation (where the Proposed Project would interconnect. Multiple other power plants are located within a 30-mile radius including, the Harry Allen Generating Station, Silver Hawk Generating Station, Silver Hawk Generating Station, Chuck Lenzie Generating Station, Apex Solar Facility, and Garnet Valley Cogeneration Plant.

Clark County has implemented land use plans for private lands within the Northeast County which includes the area around the Reservation. Northeast County is an unincorporated planning area administered by Clark County that includes the communities of Bunkerville, Glendale, Logandale, Moapa, Moapa Valley, Mesquite and Overton. These plans were adopted February, 2012 and indicate the land uses surrounding the Reservation are Open Lands, Industrial and Residential Rural and Rural Neighborhood.

3.11.2 Hunting, Fishing, Gathering

Given the industrial nature of the Reid Gardner Generating Station and utility corridors, no hunting, fishing or gathering is assumed or reported by the Tribe in the vicinity of the Proposed Project.

3.11.3 Grazing Allotments

The site is located on the Reservation which has no grazing allotments. The proposed 230 kV ROW would cross BLM managed property. The BLM administers and manages grazing allotments on public lands in the vicinity of the Proposed Project; but the gen-tie line would not cross any grazing allotments.

3.11.4 Mining

The Proposed Project is located within the Moapa Mining District. The Nevada Bureau of Mines and Geology lists the historical commodities in this district to be gypsum, volcanic ash, tin, silica, sand and gravel, and uranium (Stewart and Carlson 1978). The following mines are located within 40 miles of the of the Proposed Project: Moapa (Ready Mix) Pit - Aggregate (1.8 miles), Moapa (CEMEX) Pit - Aggregate (6.5 miles), Simplot Silica Products Pit - Silica Sand (16.9 miles), Simplot Silica Products Plant - Silica Sand (15.9 miles), Mesquite Community Pit - Sand, gravel (31 miles), Apex Landfill Pit (24.5 miles), Apex Quarry (25.7 miles), Georgia-Pacific Gypsum Plant (27.4 miles), PABCO Gypsum-Apex Pit (33.7 miles), Pioneer Gypsum Mine (36.1 miles).

3.11.5 Transportation Networks

This section identifies existing transportation and motorized vehicle access infrastructure in the Proposed Project area. The Proposed Project is located near Moapa Town, Nevada on the Moapa Reservation State and local roads provide access to the Proposed Project from I-15 including State Route (SR) 168 and Reservation Road. In addition, unpaved off-highway vehicle (OHV) roads and trails are located on the Project site. A summary of relevant transportation information is summarized below.

3.11.5.1 Major Traffic Routes Within or Adjacent to the Proposed Project

I-15 would provide access to the Proposed Project from the urban center of Las Vegas from the south and St. George and Salt Lake City, Utah to the north (**Figure 1-1**). SR 168 provides east-west direct access from I-15 and crosses the proposed solar site, as shown on **Figure 3-10**. **Table 3-17** summarizes the road network providing access to the Project area.

TABLE 3-17
ROUTES PROVIDING DIRECT OR INDIRECT ACCESS TO THE PROPOSED PROJECT

Route	Direction	Type	Lanes	Description
I-15	north-south	Paved Interstate Freeway	2 (each direction)	Provides a connection between Las Vegas, NV and Salt Lake City, UT. Provides direct access to Proposed Project via SR 168
US-93	east-west	Paved Principal Arterial	1 (each direction)	US 93 is a major highway traversing the eastern edge of the state.
SR 168	east-west	Rural Major Collector	1 (each direction)	SR 168 provides access between I-15 at Exit 90 and US 93. It is a two land undivided road. Also known as the Glendale-Moapa Valley Road
Reservation Road	north-south	Rural Minor Collector	1 (each direction)	Reservation Road provides access between SR 168 and Lincoln Street in the Town of Moapa. It is a two land undivided road that would traverse the proposed Aiya Solar project.
Union Pacific Railroad	north-south	Railroad	1 track	Provides connection between Salt Lake City and Los Angeles

3.11.5.2 Existing Traffic Volumes

Annual Average Daily Traffic (AADT) is defined as the total volume of traffic passing a point or a segment of a highway facility in both directions for one year divided by the number of days in the year (Traffic Research Board 2005). AADT figures are calculated by the Nevada Department of Transportation (NDOT) to assist in the determination of average traffic volumes at particular points along state roads throughout Clark County and the State of Nevada. The closest points to the Proposed Project (that have AADT figures published by NDOT from Traffic Records Information Access are summarized in **Table 3-18**.

TABLE 3-18 AADT SUMMARY NEAR THE PROPOSED PROJECT	
Location	**AADT**
I-15,Southbound On Ramp at Moapa Interchange (Exit 90)	500
I-15,Northbound Off Ramp at Moapa Interchange (Exit 90)	450
I-15 Segment Between Exit 90 and Exit 91	17,000
SR 168, 6.7 Miles East of US-93	200
SR 168, 0.2 Miles West of the Frontage Rd at Exit 90	1,900
US 93 168, 6 Miles North of US-93/I-15 Interchange (Exit 64)	2,300
Reservation Road, .5 Miles South of SR 168	300

Source: NDOT Traffic Records Information Access data, 2013

Level-of-Service (LOS) is a qualitative measure of traffic operating conditions, which varies from LOS A (the best) to LOS F (the worst). In urban areas the acceptable LOS is generally LOS D. However, in rural areas the acceptable LOS is generally considered to be LOS C. All road segments and interchanges listed in **Table 3-17** were operating at Level of Service C or better as of 2011(Apex to Mesquite and Moapa Valley Corridor Study, NDOT, January 2011)

3.11.6 Airports

There are seven registered airfields within 50 miles of the Proposed Project (see **Figure 3-11**). These include Perkins Field Airport, Echo Bay Airport, Nellis Air Force Base, North Las Vegas Airport, McCarran International Airport, Mesquite Airport, and Temple Bar Airport. Each is discussed below.

Perkins Field Airport in Overton, NV is located 12 miles southeast of the Proposed Project and was built to provide an emergency landing area for aircraft departing Nellis Air Force Base. Perkins averages 100 flights a week, with 62 percent local general aviation, and 38 percent transient general aviation.

Echo Bay Airport is located 27 miles southeast of the Proposed Project within the Lake Mead National Recreation Area and averages 42 private flights per month.

Nellis Air Force Base is located 37 miles south of the Proposed Project. The base itself covers more than 14,000 acres, while the total land area occupied by Nellis and its restricted ranges is about 5,000 square miles. An additional 7,700 square miles of airspace north and east of the restricted ranges are also available for military flight operations. Nellis Air Force Base averages 89 flights a day with 100 percent of them being military operations.

North Las Vegas Airport is located 44 miles southwest of the Proposed Project. North Las Vegas Airport averages 365 flights per day with 50 percent local general aviation, 42 percent transient general aviation, and 7 percent air taxi services.

McCarran International Airport is located 50 miles southwest of the Proposed Project. McCarran International Airport averages 1,426 flights a day with 65 percent commercial, 26 percent air taxi, and 7 percent transient general aviation.

Mesquite Airport in Mesquite, NV is located 33 miles northeast of the Proposed Project. Mesquite Airport averages 41 flights per day with 86 percent transient general aviation, and 13 percent local general aviation.

Temple Bar Airport in Arizona is located 48 miles southeast of the proposed project. This airport averages 79 flights per month with 74 percent general aviation and 26 percent air taxi.

3.11.7 Railroads

The Proposed Project would be located approximately 0.25 to 0.5 miles west of the Union Pacific Railroad ROW, which runs through Dry Lake Valley and into Las Vegas near I-15. This rail line connects Los Angeles-Long Beach with Salt Lake City and Union Pacific's transcontinental line to eastern destinations.

3.12 Special Management Areas

Managed natural areas in the vicinity include Valley of Fire State Park, located 16 miles southeast of the Proposed Project. The 106-acre Moapa Valley National Wildlife Refuge, established to protect the thermal spring habitat of the Moapa dace, is located 1.5 miles west of the Proposed Project. Inventories for Lands with Wilderness Characteristics (LWCs) were conducted by the BLM and resulted in LCW findings adjacent to Arrow Canyon Wilderness and the Muddy Mountains Wilderness. There are no LWCs within the Proposed Project area.

3.12.1 Wilderness

Wilderness is a legal designation designed to provide long-term protection and conservation of Federal public lands. Wilderness is defined by the Wilderness Act of 1964 as “an area where the earth and its community of life are untrammeled by man, where man himself is a visitor who does not remain. Federal land retaining its primeval character and influence, without permanent improvements or human habitation, which is protected and managed so as to preserve its natural conditions and which (1) generally appears to have been affected primarily by the forces of nature, with the imprint of man’s work substantially unnoticeable; (2) has outstanding opportunities for solitude or a primitive and unconfined type of recreation; (3) has at least five thousand acres of land or is of sufficient size as to make practicable its preservation and use in an unimpaired condition; and (4) may also contain ecological, geological, or other features of scientific, educational, scenic, or historical value.” The closest wilderness areas are the Mormon Mountain Wilderness Areas (designated in 2004) located approximately 6.5 miles northeast of the Proposed Project, the Arrow Canyon Wilderness (designated in 2002) located 6-7 miles west of the Proposed Project, the Meadow Valley Range Wilderness located 13.6 miles

northwest of the Proposed Project, and the Muddy Mountains Wilderness located 21 miles southeast of the Proposed Project.

3.12.2 Areas of Critical Environmental Concern

Areas of Critical Environmental Concern (ACECs) are areas designated by BLM where special management attention is needed to protect and prevent irreparable damage to unique natural values, or to protect human life and safety from natural hazards. Natural values include, but are not limited to, historic, cultural, scenic, and wildlife resources. The southern boundary of the 151,360-acre Mormon Mesa ACEC is located 5.6 miles northeast and 5.5 miles northwest of the Proposed Project. The Coyote Springs ACEC is located 13 miles to the west, Gold Butte ACEC is located 18.8 miles to the east, the Arrow Canyon ACEC is located 5.5 miles to the northwest and the Virgin River ACEC is located 17.7 miles to the east, Three of the ACECs (Mormon Mesa, Coyote Springs and Gold Butte) were established specifically for the management of desert tortoise habitat and recovery of the desert tortoise (BLM 1998). The Virgin River ACEC was established to protect Threatened or Endangered species habitat (the Virgin River chub, woundfin, the southwestern willow flycatcher, Yuma clapper rail, and the yellow-billed cuckoo); riparian habitat; and cultural resources. The Arrow Canyon ACEC was established to protect paleontological, geological, and cultural resources.

3.12.3 Recreation

The Proposed Project would be constructed entirely on lands owned by the Tribe or managed by the BLM. No recreation areas or dispersed recreational opportunities were identified within five-miles of the Proposed Project.

3.13 Visual Resources

This section identifies existing visual resources in the vicinity of the Proposed Project and discusses applicable policies. The baseline visual setting for the Federal lands that would be crossed by the gen-tie routes was developed based on the BLM guidelines for visual resource management (VRM). The BLM's VRM system provides a framework for describing visual resources, establishing appropriate management goals for those resources, assessing the impact of an action on those resources, and determining whether such an action would conflict with established management goals.

Neither the Tribe nor the BIA has a visual resource management policy for tribal lands.

3.13.1 Visual Resources Inventory

The Proposed Project area is located in the Basin and Range physiographic province. The area contains vegetation characteristic of the Mohave Desert dominated by low, widely spaced

shrubs such as creosote, sagebrush, brittlebush, and cholla, with scattered occurrences of yucca on flat terrain. Most of the foothills and mountainous areas are vegetated along their slopes with scattered creosote-bursage and other desertscrub, which become smaller and scarcer near the peaks.

The components of the Proposed Project that would be located on BLM lands (the gen-tie lines) would be located very near or adjacent to a BLM-designated utility corridor that contain multiple extra-high voltage transmission lines, pipelines, and substations. Most of the high voltage electrical lines in this area are associated with the existing Reid-Gardner Substation where the gen-tie line would terminate. As a result, the natural landscape setting has been heavily modified in the immediate vicinity. The existing Reid-Gardner Power Plant and Reid-Gardner Substation are visible from many areas in the general vicinity of the Proposed Project.

The Proposed Project solar field is located approximately 3.4 miles northwest of I-15. The terrain between I-15 and the solar site at their closest point contains the Muddy River Valley which is approximately 200 feet lower than the elevation of I-15 and the solar site which are at similar elevations. The mountains of the Arrow Canyon Range are visible in the background beyond the Proposed Project from I-15. Views of the Project from I-15 will include the other existing man-made features in the viewshed including the Reid-Gardner Generating Station and multiple power lines ranging from 230 kV to 500 kV in size depending on the viewpoint.

The scenic quality of the Project area is low because the landforms are relatively flat though adjacent scenery in the form of mountain ranges add visual interest, there is little variety and contrast in the local vegetation, and the landscape color variations are subtle. The landscape is common within the physiographic province and the manmade modifications detract from the natural visual harmony.

The visual sensitivity level rating unit that the Project falls within is also characterized as low. This low sensitivity level is based on the limited non-industrial uses in the area. The primary viewers of the Project area would be travelers on State Highway 168, tribal members using Reservation Road, and the relatively small number of people who work at the power facilities at or near Reid-Gardner. The presence of a designated utility corridor and the existing power facilities in the area explain the significant utility uses and these facilities dominate the existing adjacent views in the foreground and middleground distance zone that viewers from the highways (State Highway 168 and I-15) would see. The Project area lies within the foreground and middleground of most views.

3.13.2 Visual Resource Management Classes

Visual resource management classes are categories assigned to BLM-managed lands that portray the relative value of the visual resources and the associated visual management objectives. One of four VRM classes, (I, II, III, IV) is assigned to an area. VRM Class I areas have the most valuable visual resources and VRM Class IV areas have the least. The VRM

classes guide future land management actions and subsequent site-specific implementation decisions. The visual management objectives of each class are described below:

- Class I Objective. The objective of this class is to preserve the existing character of the landscape. This class provides for natural ecological changes; however, it does not preclude very limited management activity. The level of change to the characteristic landscape should be very low and must not attract attention.

- Class II Objective. The objective of this class is to retain the existing character of the landscape. The level of change to the characteristic landscape should be low. Management activities may be seen, but should not attract the attention of the casual observer. Any changes must repeat the basic elements of form, line, color, and texture found in the predominant natural features of the characteristic landscape.

- Class III Objective. The objective of this class is to partially retain the existing character of the landscape. The level of change to the characteristic landscape should be moderate. Management activities may attract attention but should not dominate the view of the casual observer. Changes should repeat the basic elements found in the predominant natural features of the characteristic landscape.

- Class IV Objectives. The objective of this class is to provide for management activities which require major modifications of the existing character of the landscape. The level of change to the characteristic landscape can be high. These management activities may dominate the view and be the major focus of viewer attention. However, every attempt should be made to minimize the impact of these activities through careful location, minimal disturbance, and repeating the basic elements.

Figure 3-12 shows the VRM classes on the BLM-administered lands in the Project area that would be crossed by the proposed gen-tie for the Project. The VRM classifications do not apply to Reservation lands. All of the BLM lands that would be affected by the Project are designated as Class III and because of the high level of modification to the landscape in this area associated with the Reid-Gardner Power Plant and associated infrastructure, Class IV may be more appropriate.

3.13.3 Visibility

Due to the local topography, the Proposed Project site and infrastructure would not be seen from many locations in the area. To identify the areas from which the project could be seen, the Proposed Project features were plotted on a Digital Elevation Model (DEM) of the area. These maps were overlain with the locations of communities, travel routes, historic landmarks, and recreation areas (for example, historic trails, and travel routes). A viewshed analysis was conducted at a height of 15 feet above site grades to determine the areas from which Proposed Project solar facility (PV solar modules and associated facilities) could be visible. The transmission structures were not evaluated in the visibility analysis because they would occur in

areas near or adjacent to existing transmission lines that are equal or larger in size. **Figures 3-11** shows the areas from which the Proposed Project could potentially be seen.

As shown on this figure, the areas from which the Project could be seen are limited to locations relatively close to the Project area because of intervening topography. The Old Spanish National Historic Trail is a sensitive resource in the area located approximately 2.5 miles east of the proposed Project site at its closest point. As **Figure 3-13** shows, the proposed solar Project structures could be potentially visible at a few locations along the Trail. A more detailed discussion of the visibility of the Project from the Trail is provided below and in Chapter 4.

3.13.4 Key Observation Points

Key Observation Points (KOPs) represent a critical or typical viewpoint within, or along, an identified location. They are used to provide representative views to assess and mitigate visual impacts of a proposed action and to evaluate compliance with designated visual management objectives.

There are no residences in the immediate area but housing is located in the Moapa community about 0.5 miles south and west of the Proposed Project site but at elevations about 100 to 150 feet lower than proposed solar site. State Highway 168 and Reservation Road cross the proposed site.

KOP locations were selected through consultation with the Tribe and agencies and represent views along nearby public travel routes and from locations on the Old Spanish National Historic Trail from which the Project could be seen. **Figure 3-14** shows the KOP locations. These KOPs provide views that are representative of many locations around the Project area.

3.13.4.1 KOP 1

This viewpoint is located on Highway 168 at the eastern edge of the solar project area. Highway 168 is a state highway providing a main travel route from I-15 in the area. This KOP provides a potential view of the solar site from a distance of about 0.5 miles from the Proposed Project. Potential views of the portions of the Project on the north side of the highway from this KOP to westbound travelers would be nearly perpendicular to the direction of travel and so would not be in the normal line of sight for drivers but possibly more visible to passengers. Portions of the project on the south side of the highway would be more visible to the driver.

The existing view from this portion of Highway 168 contains little development except for a low voltage transmission line on the north side of the road. The Arrow Canyon mountain range is in the background. The vegetation is creosote/scrub desert displaying dotted colors of browns, tans, and yellows.

Figure 3-15 shows the existing view from KOP 1 looking northwest to the Proposed Project site.

3.13.4.2 KOP 2

This viewpoint is located on Highway 168 approximately 0.1 miles east of its intersection with Reservation Road. This KOP provides a potential view of the solar site on both sides of the highway.

The existing view from this location on Highway 168 contains low voltage transmission lines and the sign for the Moapa River Indian Reservation. The Arrow Canyon mountain range is in the background. The vegetation is creosote/scrub desert.

Figure 3-16 shows the existing view from KOP 2 looking northwest through the Proposed Project site.

3.13.4.3 KOP 3

This viewpoint is located at the intersection of Highway 168 and Reservation Road looking down Reservation Road. This KOP provides a potential view of the solar site on both sides of Reservation Road.

The existing view from this location contains no development and includes local road signage. The Arrow Canyon mountain range is in the background. The vegetation is creosote/scrub desert common in the area.

Figure 3-17 shows the existing view from KOP 3 looking southwest through the Proposed Project site.

3.13.4.4 KOP 4

This viewpoint is located on Reservation Road just south of the intersection of Highway 168 and looks down Reservation Road. This KOP also provides a potential view of the solar site on both sides of Reservation Road.

The existing view from this location contains no development. The Arrow Canyon mountain range is in the background. The vegetation is creosote/scrub desert common in the area.

Figure 3-18 shows the existing view from KOP 4 looking southwest through the Proposed Project site.

3.13.4.5 KOP 5

This viewpoint is located on Reservation Road about 0.5 miles southwest of the intersection of Highway 168. This KOP provides a potential view of the solar site on both sides of Reservation Road.

The existing view from this location contains an industrial development in the background but no additional development in the foreground or middleground. Mountains are also seen in the background. The vegetation is creosote/scrub desert common in the area.

Figure 3-19 shows the existing view from KOP 5 looking northeast through the Proposed Project site.

3.13.4.6 KOP 6

This viewpoint is located on Highway 168 near the western edge of the Project area about 0.2 miles west of the intersection with Lyttle Lane. This KOP provides a potential view of the solar site on both sides of the highway.

The existing view from this portion of Highway 168 contains little development except for a low voltage transmission line on the north side of the road. Mountains are seen in the background. The vegetation is creosote/scrub desert common in the area.

Figure 3-18 shows the existing view from KOP 6 looking southeast through the Proposed Project site.

3.13.4.7 KOP 7

This viewpoint is located on Highway 168 just east of the intersection with Lyttle Lane. This KOP provides a potential view of the solar site on the south side of the highway.

The existing view from this portion of Highway 168 contains no development except for road signs associated with the intersection. The Arrow Canyon mountain range is seen in the background. The vegetation is creosote/scrub desert common in the area.

Figure 3-20 shows the existing view from KOP 7 looking west through the Proposed Project site.

3.13.4.8 KOP 8

This viewpoint is located on the Old Spanish National Historic Trail about 2.4 miles southeast of the solar site. This KOP provides a potential view of the solar site that would be located on the top of the hill in the background.

The existing view from this portion of the Trail contains an existing railroad in the middleground and some transmission structures in the background. The Arrow Canyon mountain range is seen in the background. The vegetation is creosote/scrub desert common in the area.

Figure 3-22 shows the existing view from KOP 8 looking northwest toward the Proposed Project site.

3.13.4.9 KOP 9

This viewpoint is located on the Old Spanish National Historic Trail where it crosses Hidden Valley Road about 2.3 miles southeast of the solar site. This KOP provides a potential view of the solar site that would be located on the top of the hill in the background.

The existing view from this portion of the Trail contains significant evidence of past and current industrial development in the foreground and middleground. It includes an existing railroad several transmission structures. The Arrow Canyon mountain range is seen in the background. The vegetation is primarily disturbed but also includes the creosote/scrub desert common in the area.

Figure 3-23 shows the existing view from KOP 9 looking northwest toward the Proposed Project site.

3.13.4.10 KOP 10

This viewpoint is located on the Old Spanish National Historic Trail about 2.2 miles southeast of the solar site. This KOP provides a potential view of the solar site that would be located at the top of the hill in the view.

The existing view from this portion of the Trail contains irrigated agriculture in the foreground and a road and several transmission structures in the background. The Arrow Canyon mountain range is seen in the background. The vegetation beyond the irrigated pasture is creosote/scrub desert common in the area.

Figure 3-24 shows the existing view from KOP 10 looking northwest toward the Proposed Project site.

3.13.4.11 KOP 11

This viewpoint is located on the Old Spanish National Historic Trail and is representative of two locations about 2.3 miles southeast of the solar site. This KOP provides a potential view of the solar site that would be located on the hill in the background.

The existing view from this portion of the Trail contains the stacks of the existing Reid-Gardner Power Plant in the middleground and some transmission structures in the background. The Arrow Canyon mountain range is seen in the background. The vegetation is creosote/scrub desert common in the area.

Figure 3-25 shows the existing view from KOP 11 looking northwest toward the Proposed Project site.

3.14 Public Health and Safety

This section describes existing conditions relative to human health and safety. The Proposed Project is located on undeveloped lands held in trust for the Tribe and could be potentially affected by existing hazards in the Project area including fire, earthquakes, flooding, existing soil or groundwater contamination, and other potential natural and infrastructure hazards.

3.14.1 Potential Hazardous Waste/Contaminated Soil and Groundwater

Exposure to hazardous materials or wastes could occur from both existing conditions at the Proposed Project and from Proposed Project activities. However, the potential for encountering hazards and hazardous material at the Proposed Project during construction and operation would be low because of the undeveloped nature of the Project site and surrounding areas and the proposed plans for handling such materials during the construction and operation of the Project.

A phase 1 Site Assessment (ESA) was conducted for the Proposed Project site and surrounding area (**Appendix H**) to determine if historical or current hazardous material may be present in the Proposed Project area. No sites were adjacent to the site and there is no reported hazardous site within the Proposed Project site.

3.14.1.2 Hazardous Materials Management

Fuels, oils, lubricants, and solvents would be the primary hazardous and flammable materials that would be on-site during construction and operation. Small quantities of additional common hazardous materials would be used on-site during construction, including antifreeze and used coolant, latex and oil-based paint, paint thinners and other solvents, cleaning products, and herbicides. The materials of these types that are expected to be used at the Project site are itemized in Tables 2-3A and 2-3B in Chapter 2 of this EIS.

All hazardous waste will be segregated, sorted, and stored in a designated location. Properly sized secondary spill containments will be provided for each type of waste.

Substation transformers typically contain oil, but the oils currently used are mineral oils and non-hazardous. All transformers would comply with Spill Prevention, Control, and Countermeasure (SPCC) requirements, which mandate that transformers have secondary containment sufficient to contain a release of the entire volume of oil in a transformer. Proposed handling of wastes and hazardous wastes is described in Section 2.2.8 in Chapter 2.

3.14.2 Fire Hazards

The Nevada Fire Safe Council commissioned the Clark County Community Wildfire Risk/Hazard Assessment Project that was published in 2005. This assessment included communities at risk within the vicinity of Federal lands that are most vulnerable to the threat of wildfire and was based on five primary factors that affect potential fire hazard:

- Community design,
- Construction materials,
- Defensible space,
- Availability of fire suppression resources, and
- Physical conditions such as the vegetative fuel load and topography.

The Project site is located in the southwest corner of the Reservation. The closest fire service is a volunteer fire department in Moapa Town, approximately 1 mile south of the site. Water availability for fire suppression in Moapa Town includes community wells and two tanks with a combined capacity of four million gallons. Moapa Town also has access to the Muddy River and several ponds for drafting and helicopter dip sites.

3.14.3 Worker Safety

During Proposed Project construction, standard health and safety procedures would be implemented in accordance with OSHA standards to minimize the risk of accidents or injuries. Safety planning and regular training sessions would occur to ensure that workers were adequately prepared to address any anticipated site-specific hazards, such as electrocution, fires, and accidents (such as slips, trips, or falls). In addition, workers would be trained on the appropriate use of safety equipment and personal protective equipment (PPE). The Engineering, Procurement, and Construction (EPC) contractor will be responsible for submitting an adequate Health & Safety Plan prior to construction.

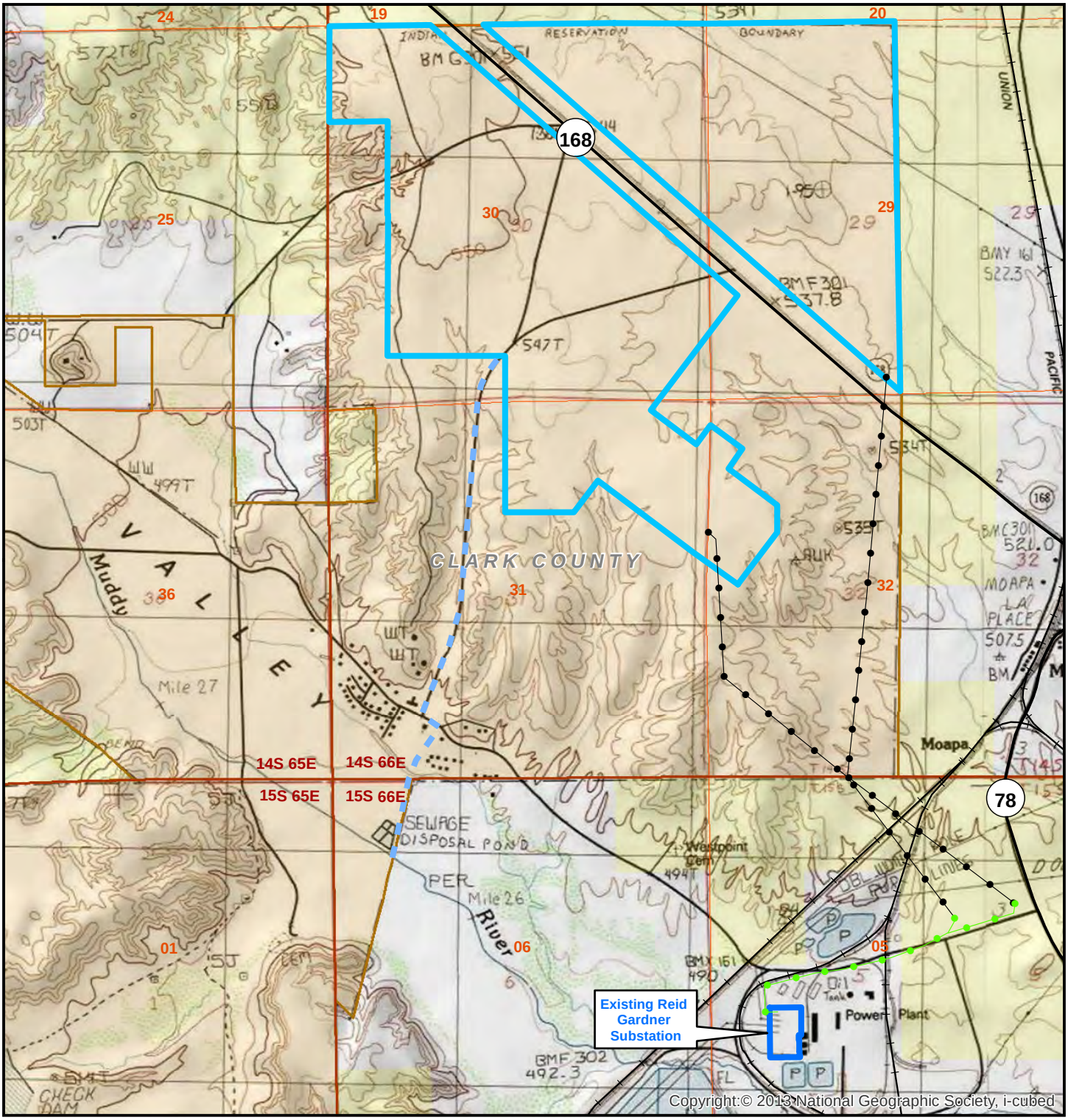

Legend

- Gen-Tie Routes
- Double-Circuit Line
- Water Pipeline
- State Highway
- Railroad
- Township/Range Boundary
- Section Line
- Project Area
- Existing Substation
- Jurisdictional Land Ownership
- Bureau of Land Management Land
- Indian Reservation

1:24,000

0 0.1 0.2 0.3 0.4 0.5

Miles

State Plane
North American Datum 1983
Nevada East, FIPS 2701, Feet

Aiya Solar Project

Figure 3-1
Topography

Map Extent: Clark County, Nevada

Date: 05-06-15		Author: rnc

H:\Aiya Solar/MXD's/Topography 8.5x11 050615.mxd

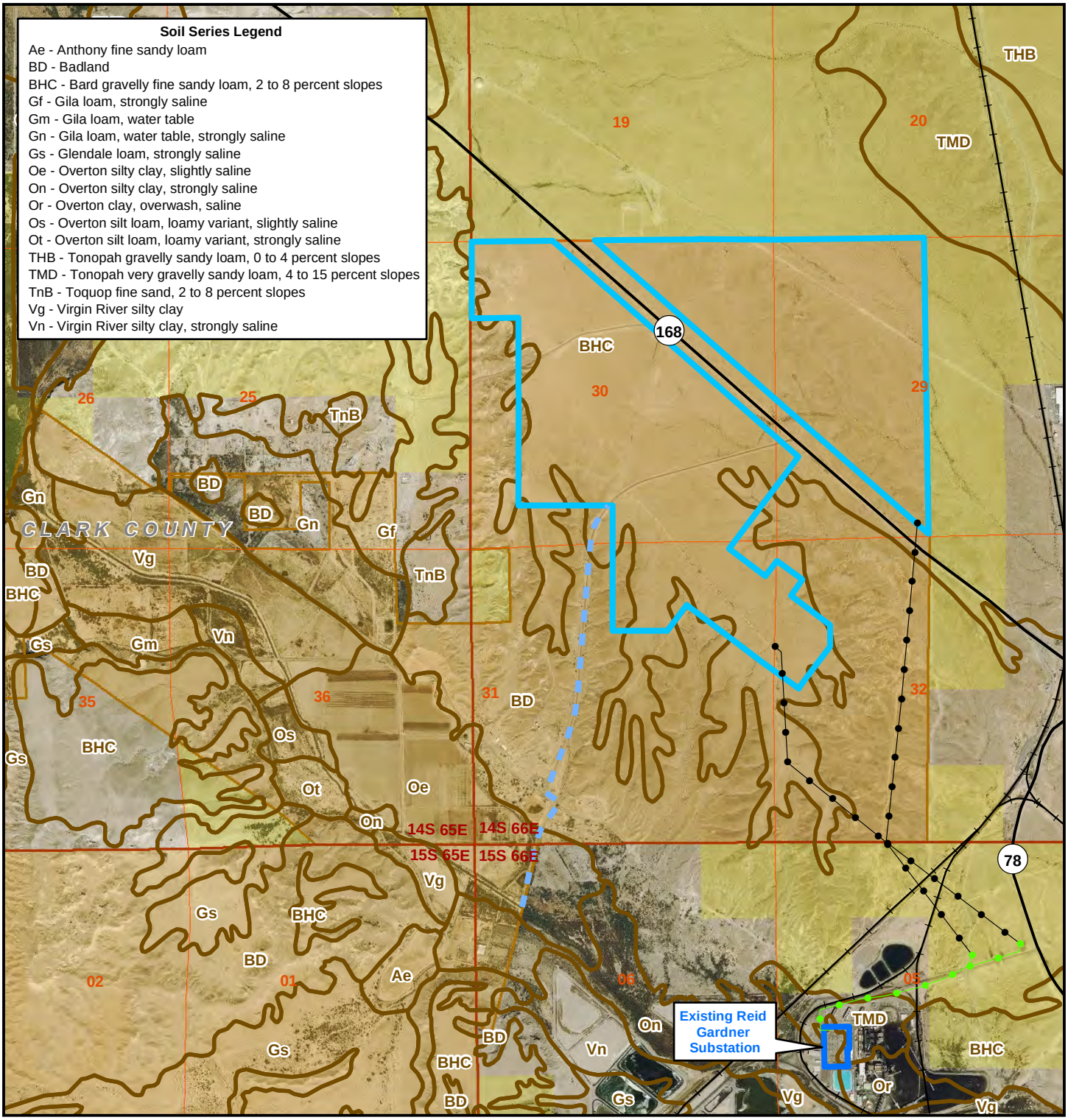

Legend

- Gen-Tie Routes
- Double-Circuit Line
- Water Pipeline
- State Highway
- Railroad
- Township/Range Boundary
- Section Line
- Project Area
- Existing Substation
- Soil Series
- Jurisdictional Land Ownership
- Bureau of Land Management Land
- Indian Reservation

0 0.1 0.2 0.3 0.4 0.5
Miles

State Plane
North American Datum 1983
Nevada East, FIPS 2701, Feet

Aiya Solar Project

Figure 3-2
SOILS MAP

Map Extent: Clark County, Nevada

Date: 05-06-15		Author: rnc

H:\Aiya Solar/MXD's/Soils 8.5x11 033115.mxd

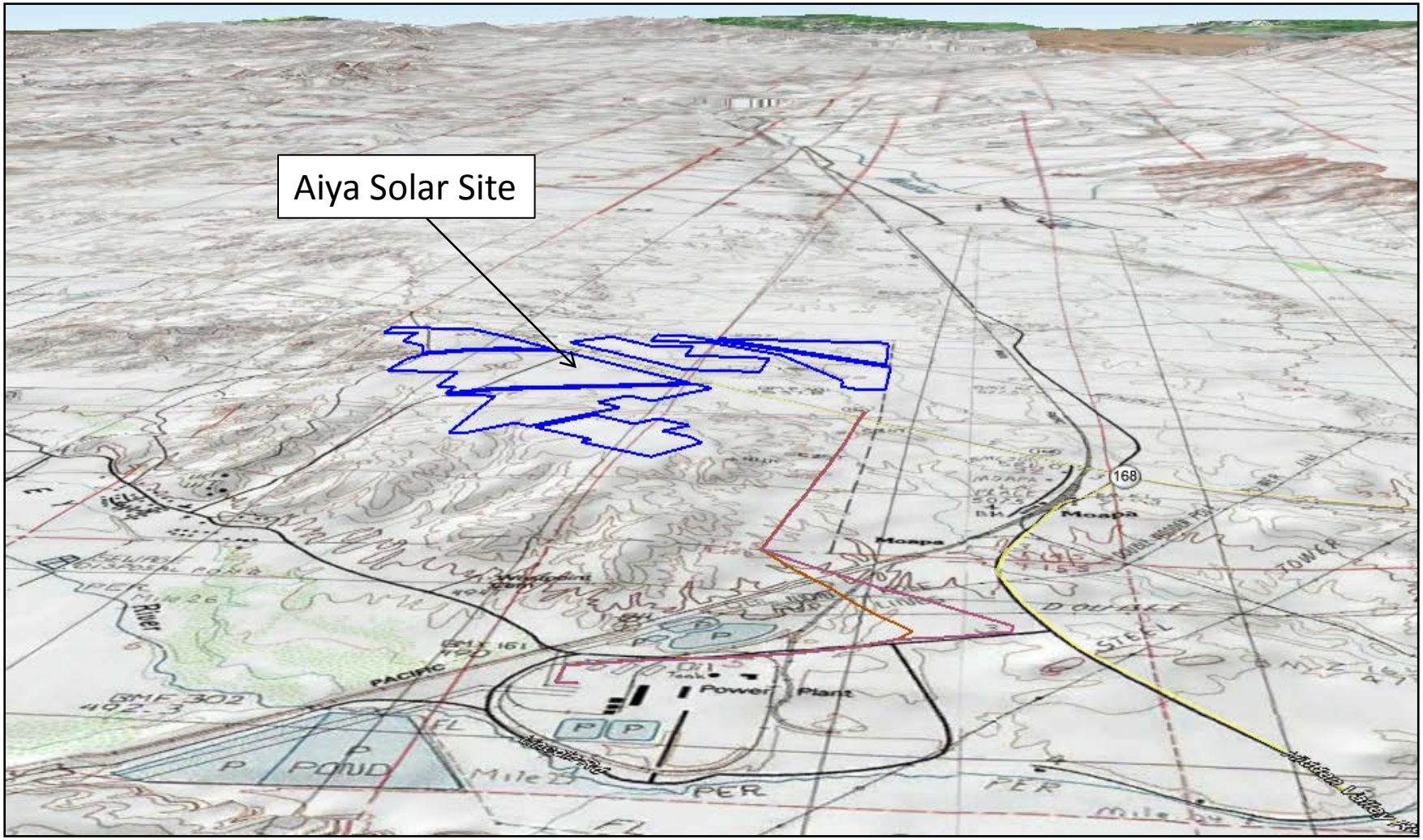

Figure 3-3

Aiya Solar Project

Topographic Position of Site

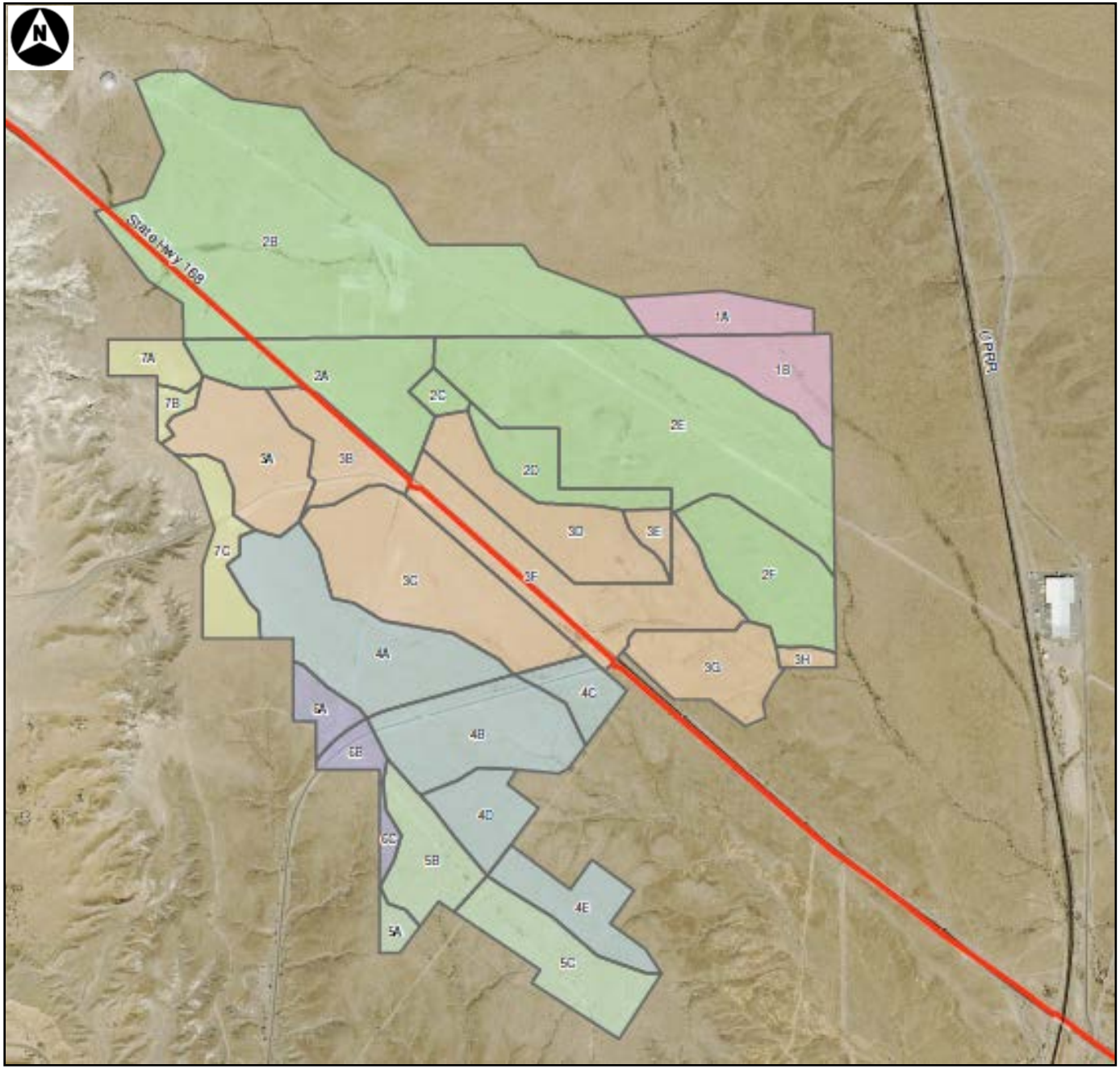

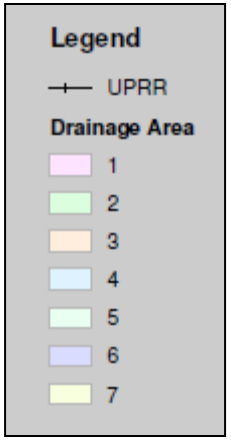

Figure 3-4
Aiya Solar Project
Site Drainage Areas

Source: Louis Berger 2015

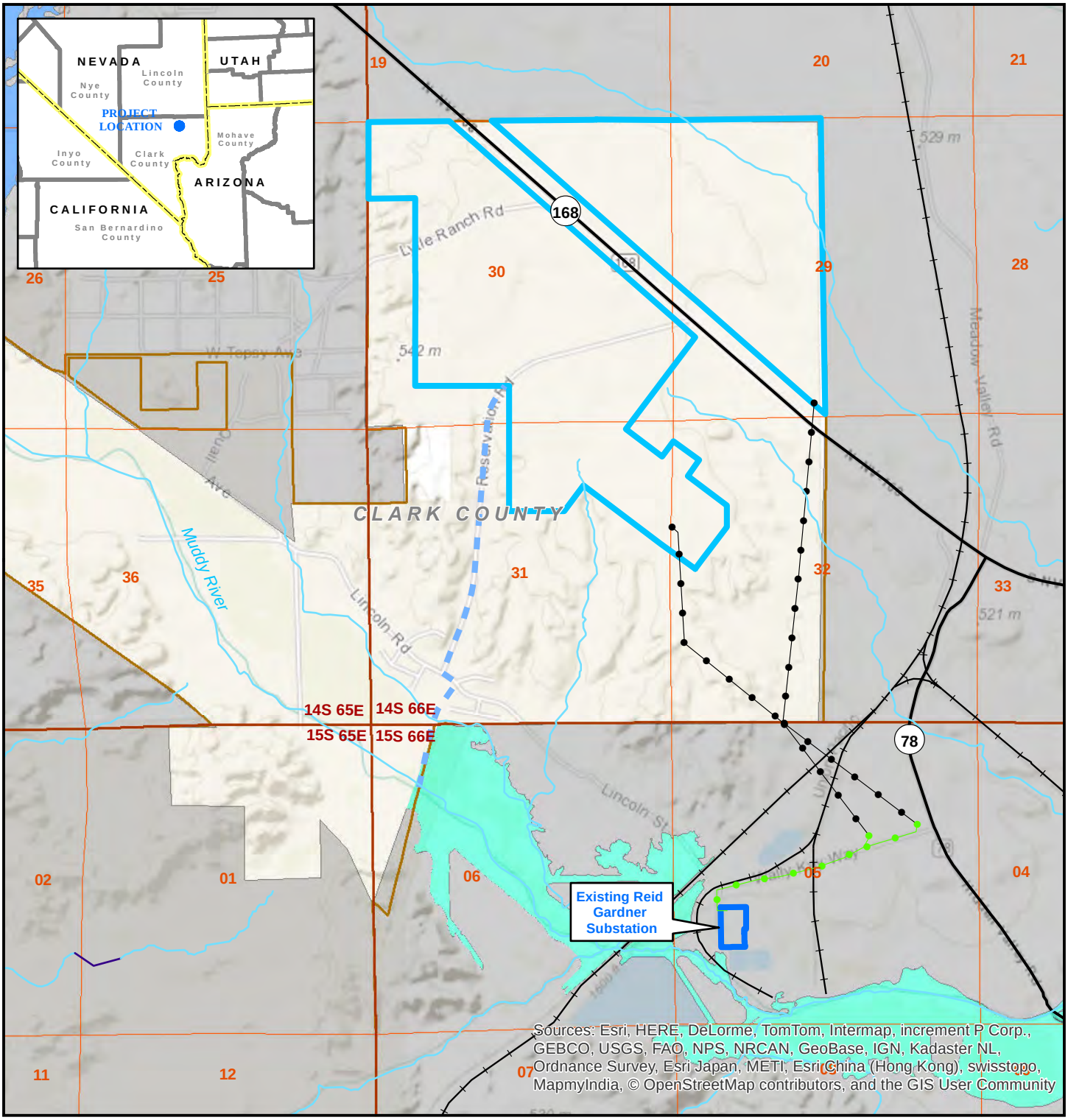

Legend

- Gen-Tie Routes
- Double-Circuit Line
- Water Pipeline
- State Highway
- Railroad
- Intermittent Stream/ River
- Township/Range Boundary
- Section Line
- Project Area
- Existing Substation
- FEMA Flood Zone A
- FEMA Flood Zone AE
- FEMA Flood Zone X
- Indian Reservation

0 0.1 0.2 0.3 0.4 0.5
Miles

State Plane
North American Datum 1983
Nevada East, FIPS 2701, Feet

Aiya Solar Project

Figure 3-5
DRAINAGES AND FLOOD ZONES

Map Extent: Clark County, Nevada

Date: 05-06-15		Author: rnc

H:\Aiya Solar/MXD's/Flood Zone 8.5x11 050615.mxd

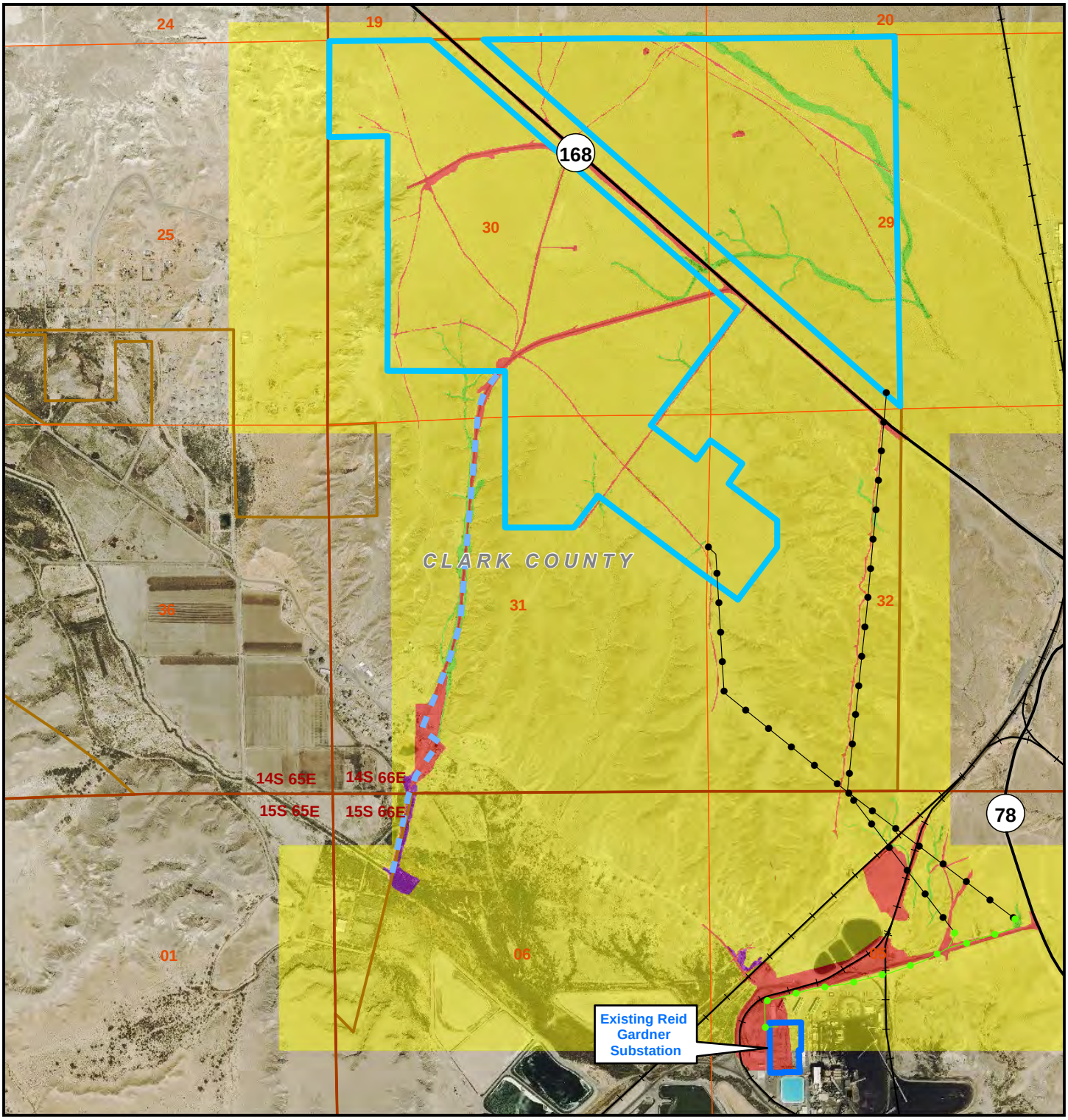

Legend

- Gen-Tie Routes
- Double-Circuit Line
- Water Pipeline
- State Highway
- Railroad
- Township/Range Boundary
- Section Line
- Project Area
- Existing Substation

Vegetation

- Creosotebush-White Bursage
- Disturbed
- Mesquite-Tamarisk
- Xero-riparian

1:24,000

0 0.1 0.2 0.3 0.4 0.5

Miles

State Plane
North American Datum 1983
Nevada East, FIPS 2701, Feet

Aiya Solar Project

Figure 3-6
Vegetation Covertypes

Map Extent: Clark County, Nevada

Date: 05-06-15 | Author: rnc

H:\Aiya Solar/MXD's/Vegetation 8.5x11 050615.mxd

Source: Newfields

Figure 3-7

Proposed Western Yellow-Billed Cuckoo Critical Habitat

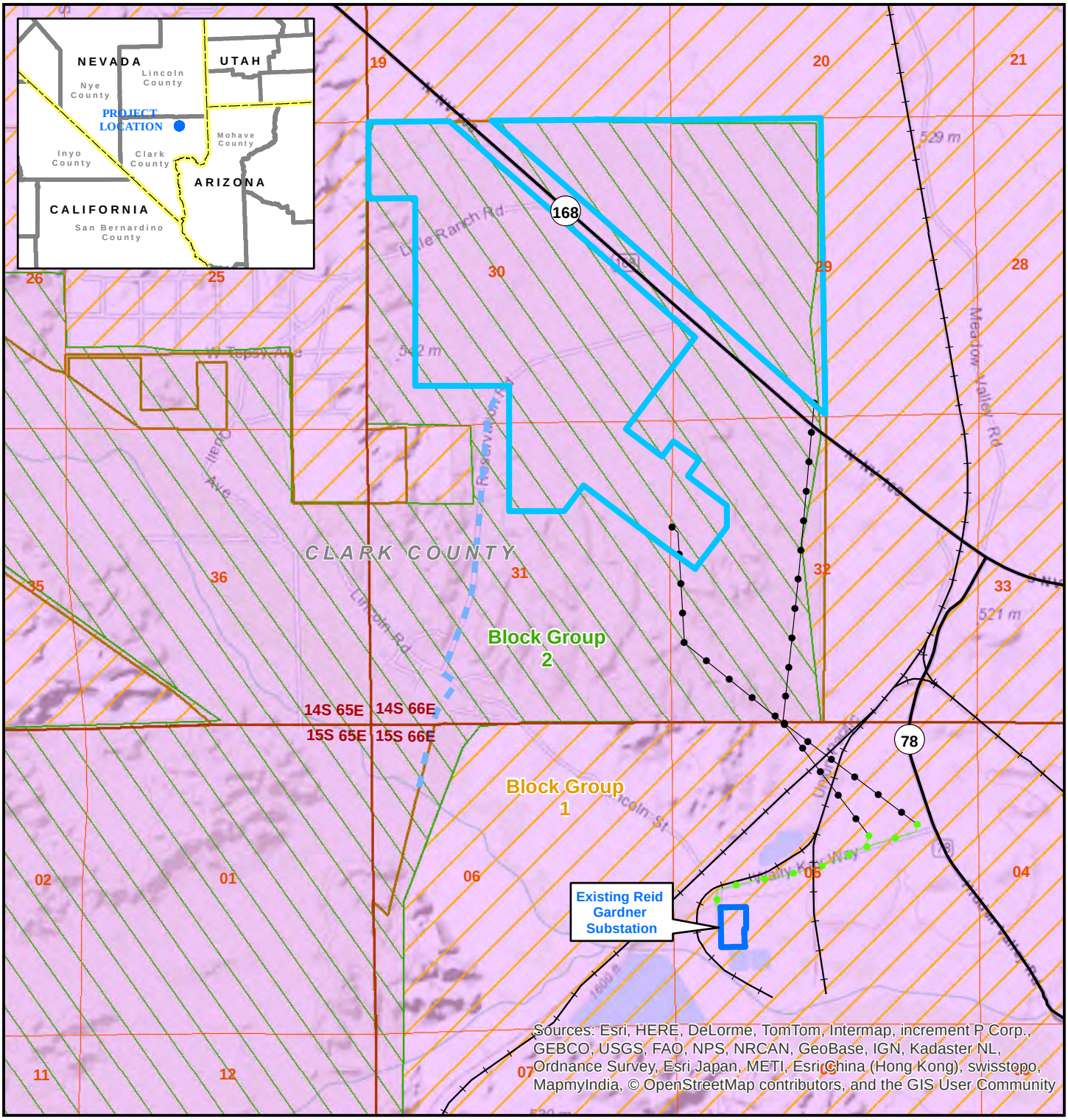

Legend

- Gen-Tie Routes
- Double-Circuit Line
- Water Pipeline
- State Highway
- Railroad
- Township/Range Boundary
- Section Line
- Project Area
- Existing Substation
- Census Tract 59.02
- Block Group 1
- Block Group 2
- Indian Reservation

0 0.1 0.2 0.3 0.4 0.5
Miles

Universal Transverse Mercator
North American Datum 1983
Zone 11 North, Meters

Aiya Solar Project

Figure 3-8
REGIONAL CENSUS TRACTS

Map Extent: Clark County, Nevada

Date: 05-06-15		Author: rnc

H:\Aiya Solar/MXD's/Census 8.5x11 050615.mxd

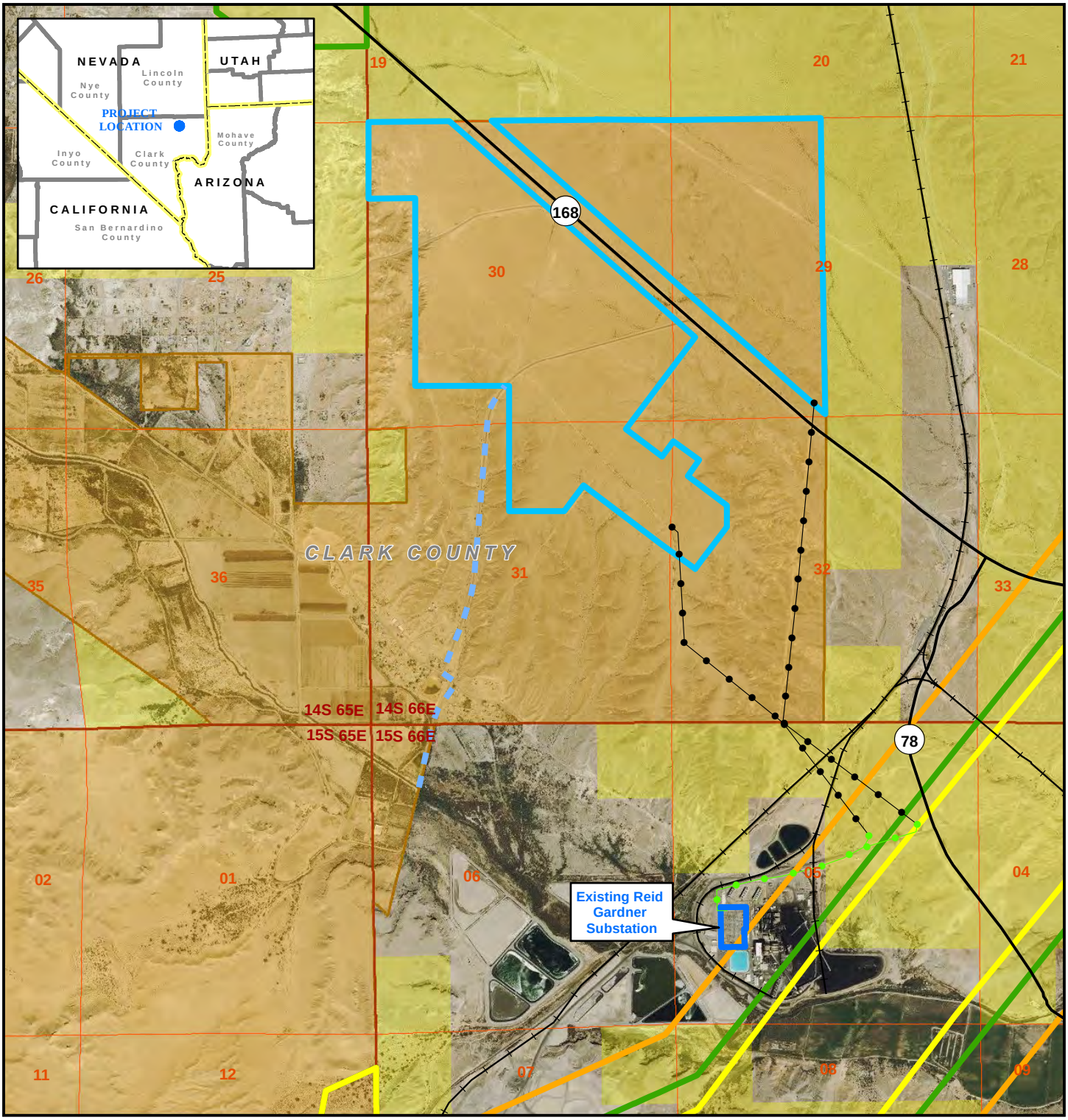

Legend

- Gen-Tie Routes
- Double-Circuit Line
- Water Pipeline
- State Highway
- Railroad
- Township/Range Boundary
- Section Line
- Project Area
- Existing Substation
- BLM Utility Corridor Alternatives 1 and 2
- BLM Utility Corridor Alternative 3
- BLM Utility Corridor Alternative 4
- Jurisdictional Land Ownership
- Bureau of Land Management Land
- Tribal Land

0 0.1 0.2 0.3 0.4 0.5
Miles

State Plane
North American Datum 1983
Nevada East, FIPS 2701, Feet

Aiya Solar Project

Figure 3-9
DESIGNATED UTILITY CORRIDORS

Map Extent: Clark County, Nevada

Date: 05-06-15		Author: rnc

H:\Aiya Solar/MXD's/Utilities 8.5x11 050615.mxd

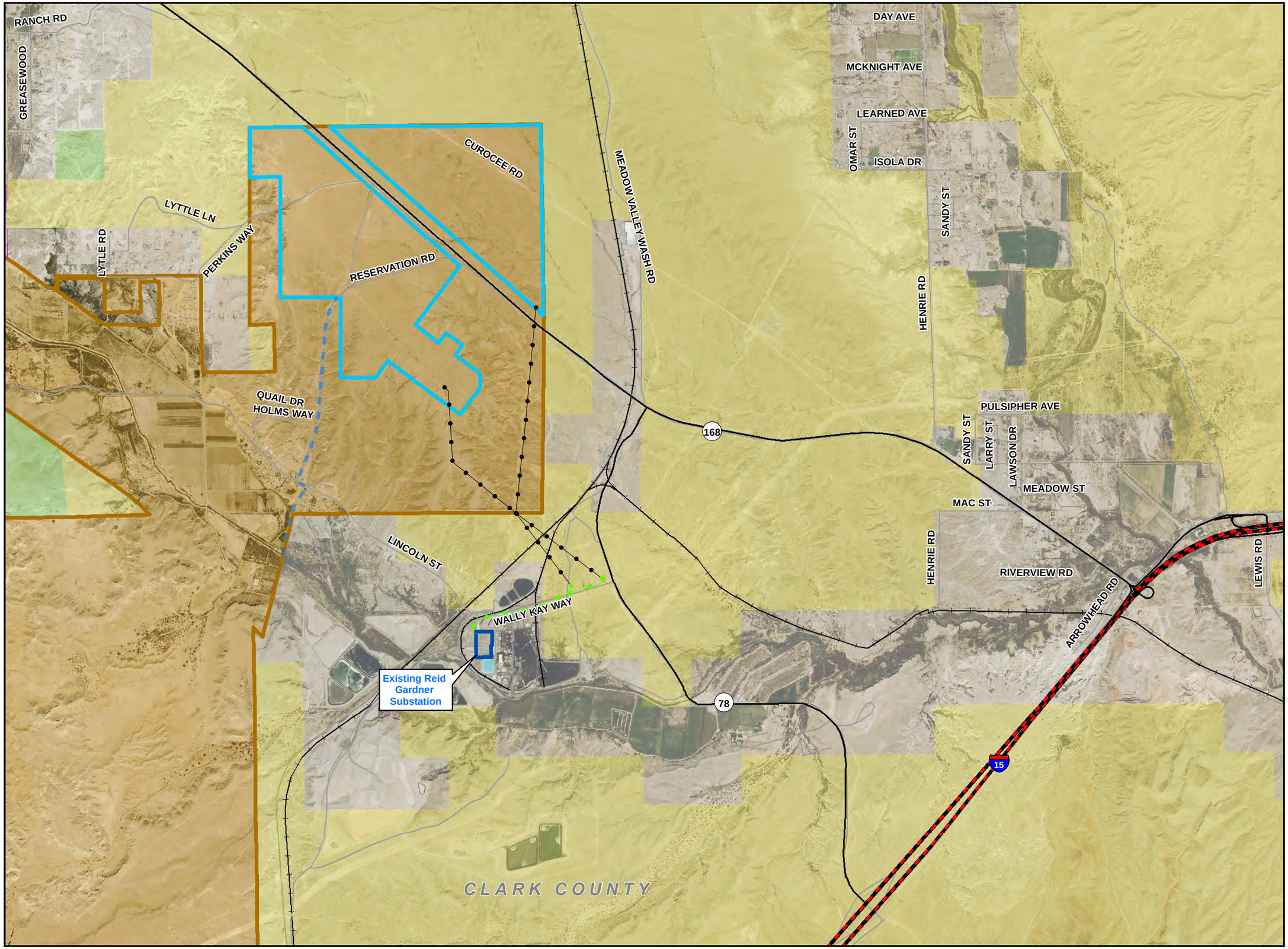

Legend

- Gen-Tie Routes
- Double-Circuit Line
- Water Pipeline
- State Highway
- Road
- Railroad
- Project Area
- Existing Substation

Jurisdictional Land Ownership

- Bureau of Land Management Land
- Indian Reservation
- Bureau of Reclamation

0 1,000 2,000 3,000
Feet

0 0.25 0.5 0.75
Miles

State Plane Coordinate System
Nevada East, NAD 83
Lambert Conformal Conic Projection
1983 North American Datum
Linear Unit: Foot US

AIYA SOLAR PROJECT

Figure 3-10
Transportation Network

Map Extent: Clark County, Nevada

Date: 05-06-15 | Author: rnc

...Maps\Transportation Network .mxd

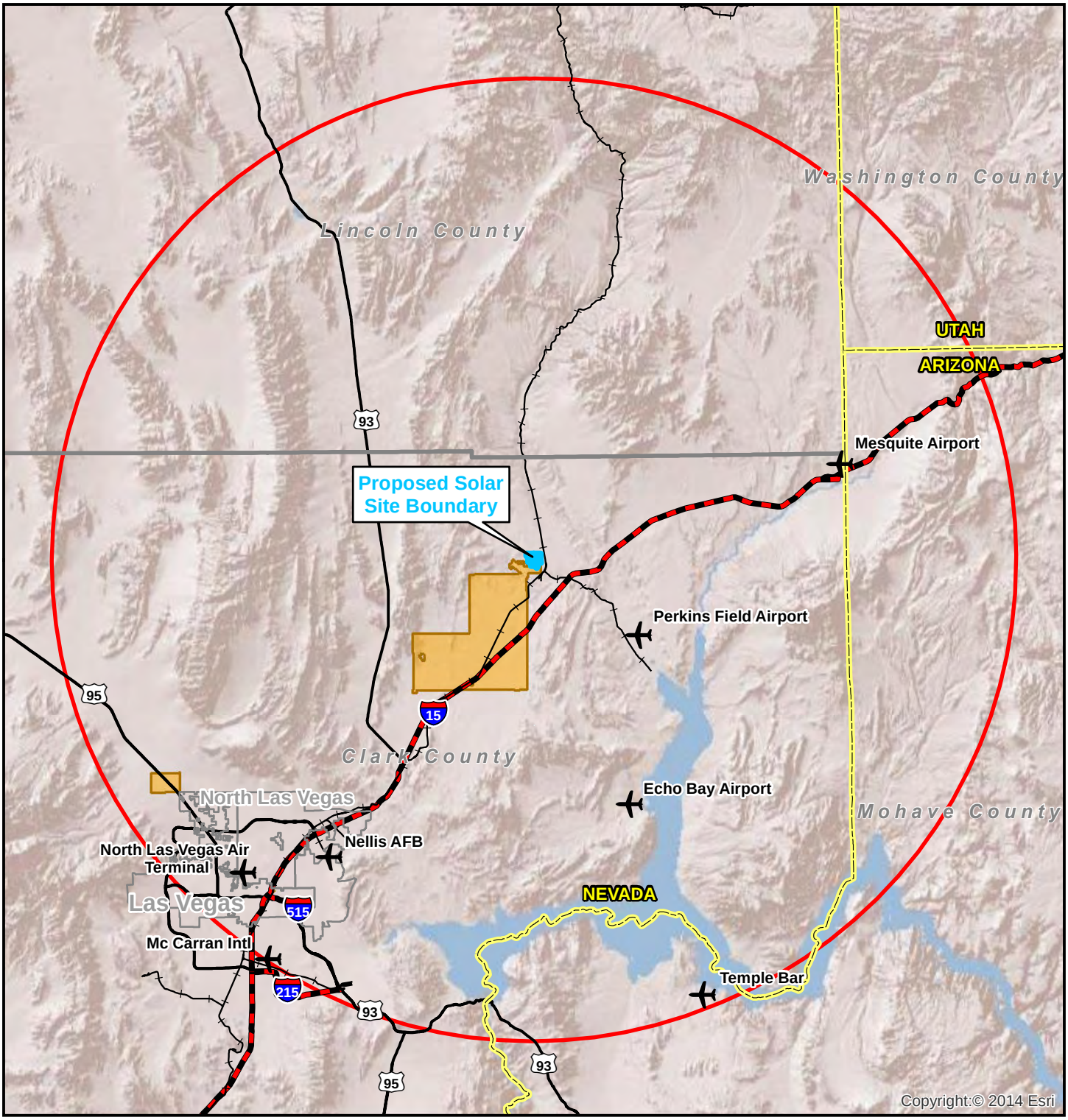

Legend

- Airport
- Interstate
- US/ State Highway
- Railroad
- State Boundary
- County Boundary
- Municipal Boundary
- Project Area
- 50 Mile Radius of Solar Project
- Jurisdictional Land Ownership
- Tribal Land

0 5 10 15
Miles

State Plane
North American Datum 1983
Nevada East, FIPS 2701, Feet

Aiya Solar Project

Figure 3-11
AIRPORT LOCATIONS

Map Extent: Clark County, Nevada

Date: 03-31-15		Author: rnc

H:\Aiya Solar/MXD's/Airports 8.5x11 033115.mxd

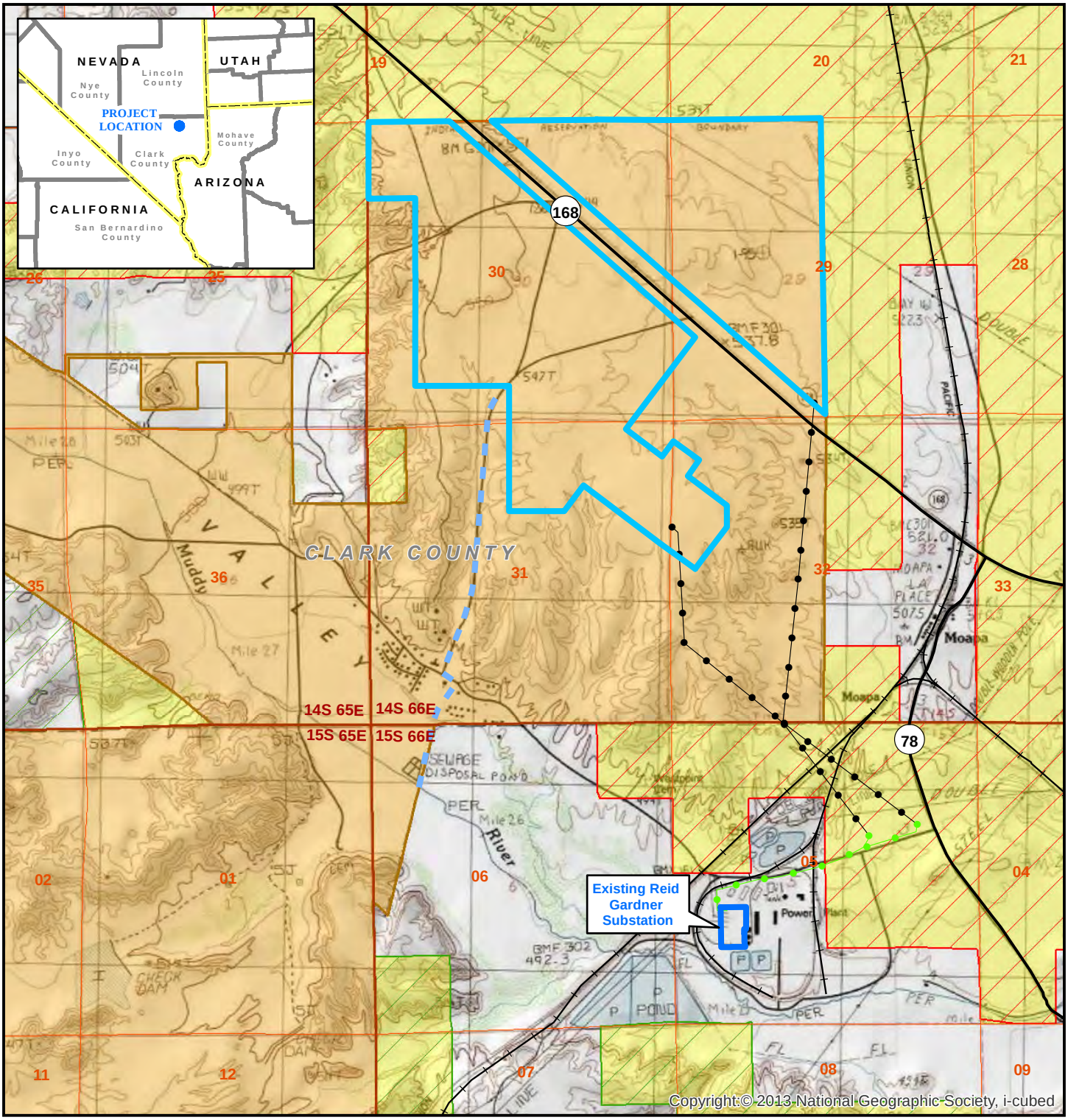

Legend

- Gen-Tie Routes
- Double-Circuit Line
- Water Pipeline
- State Highway
- Railroad
- Township/Range Boundary
- Section Line
- Project Area
- Existing Substation
- VRM Class III
- VRM Class IV
- Jurisdictional Land Ownership
- Bureau of Land Management Land
- Tribal Land

0 0.1 0.2 0.3 0.4 0.5
Miles

State Plane
North American Datum 1983
Nevada East, FIPS 2701, Feet

Aiya Solar Project

Figure 3-12
VISUAL CLASSSIFICATIONS IN THE PROJECT AREA

Map Extent: Clark County, Nevada

Date: 05-06-15		Author: rnc

H:\Aiya Solar/MXD's/Utilities 8.5x11 050615.mxd

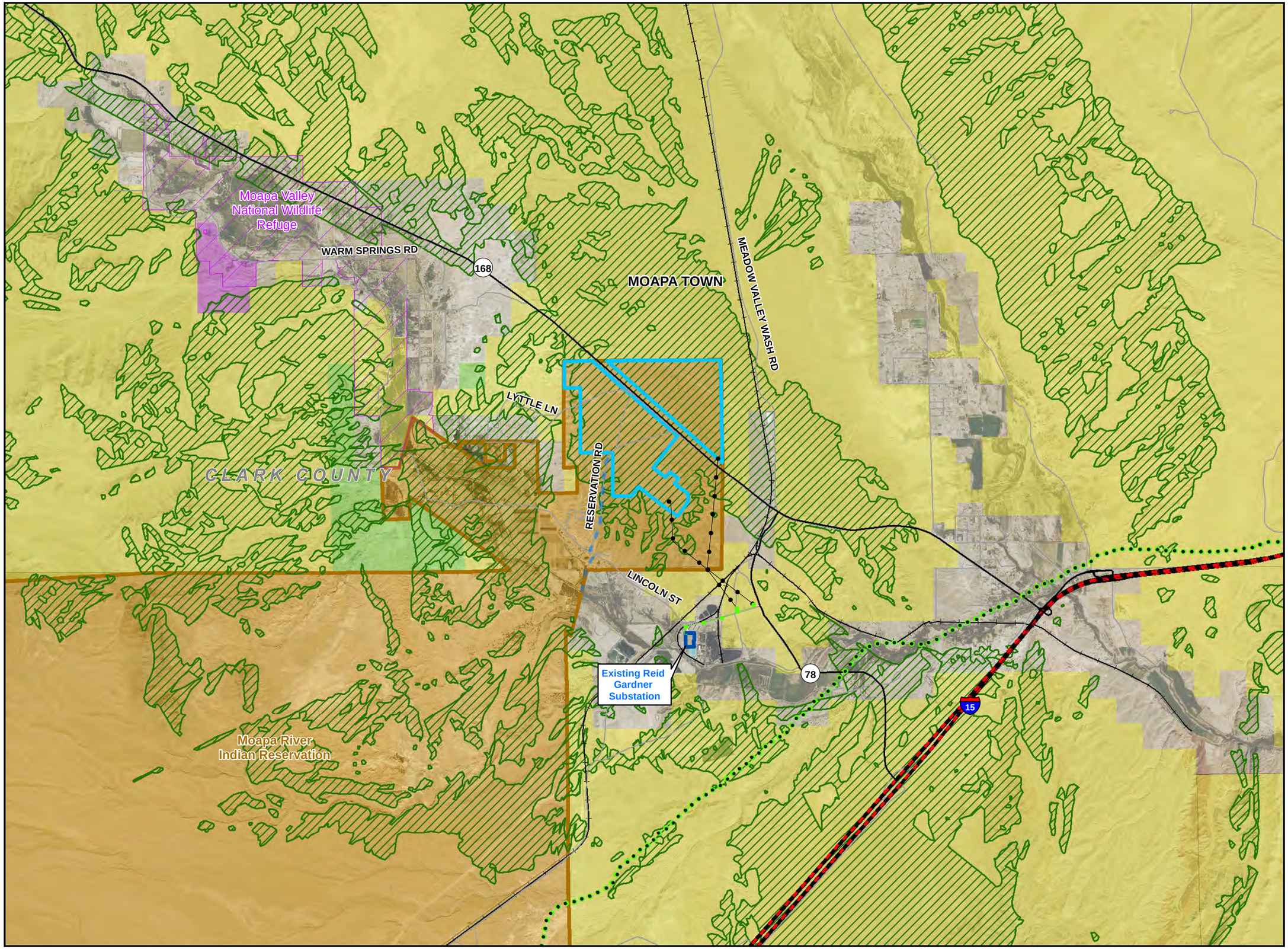

Legend

- Gen-Tie Routes
- Double-Circuit Line
- Water Pipeline
- State Highway
- Road
- Railroad
- Old Spanish Trail
- Project Area
- Existing Substation
- Municipal Boundary
- US Fish & Wildlife Service Approved Acquisition
- Visibility Area

Jurisdictional Land Ownership

- Bureau of Land Management Land
- Indian Reservation
- Bureau of Reclamation
- Fish and Wildlife Service

0 2,000 4,000 6,000
Feet

0 0.5 1 1.5
Miles

State Plane Coordinate System
Nevada East, NAD 83
Lambert Conformal Conic Projection
1983 North American Datum
Linear Unit: Foot US

AIYA SOLAR PROJECT

Figure 3-13
Visibility Analysis

Map Extent: Clark County, Nevada

Date: 05-06-15 | Author: rnc

...Maps\Visibility Analysis.mxd

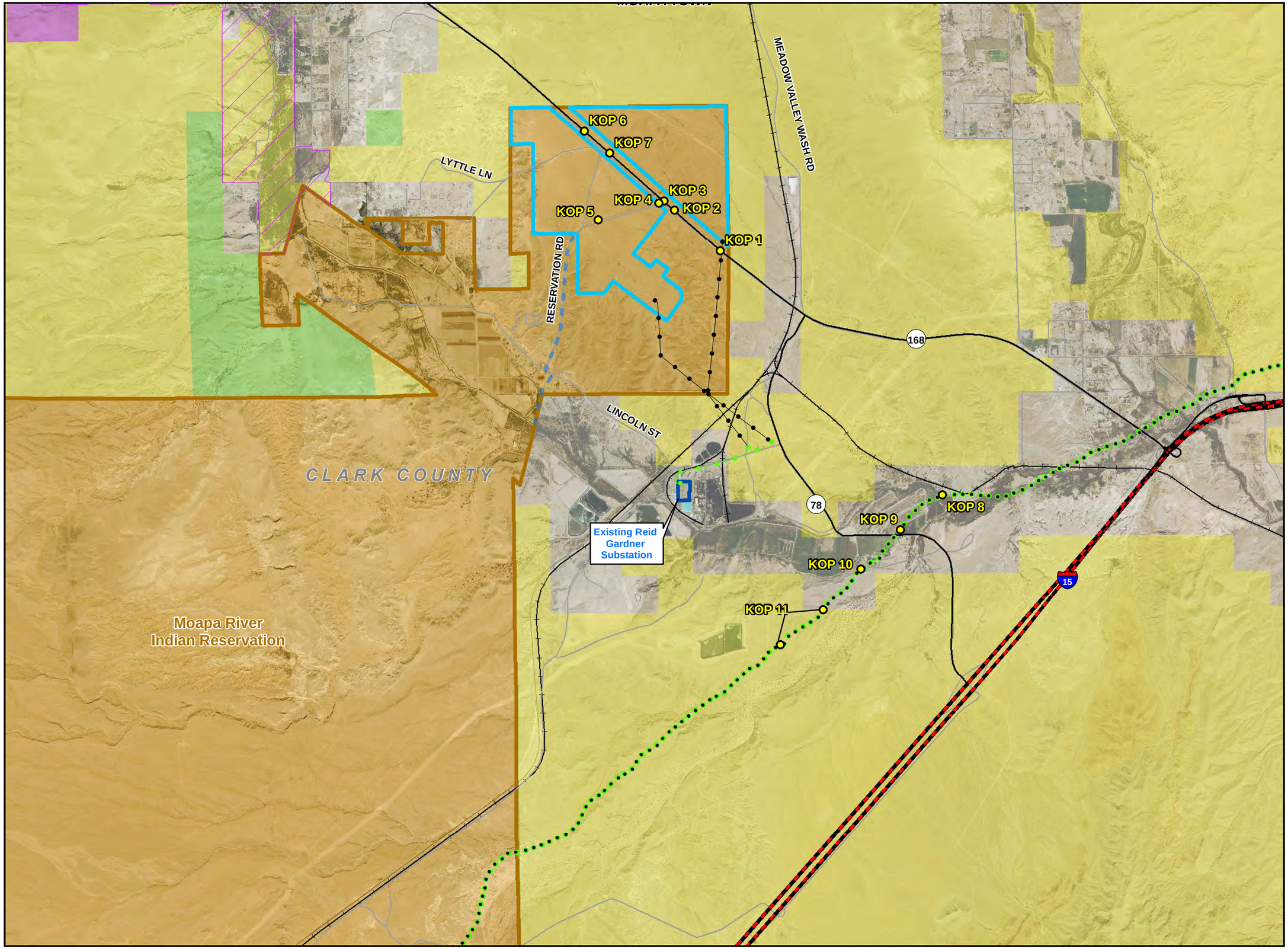

Legend

- Key Observation Point
- Proposed Gen-Tie Routes
- Proposed Double-Circuit Line
- Water Pipeline
- State Highway
- Road
- Railroad
- Old Spanish Trail
- Project Area
- Existing Substation
- US Fish & Wildlife Service Approved Acquisition

Jurisdictional Land Ownership

- Bureau of Land Management Land
- Indian Reservation
- Bureau of Reclamation
- Fish and Wildlife Service

0 2,000 4,000 6,000
Feet

0 0.5 1
Miles

State Plane Coordinate System
Nevada East, NAD 83
Lambert Conformal Conic Projection
1983 North American Datum
Linear Unit: Foot US

AIYA SOLAR PROJECT

Figure 3-14
KOP Locations

Map Extent: Clark County, Nevada

Date: 05-06-15 | Author: rnc

...Maps\Visibility Analysis.mxd

Figure 3-15

Existing View from KOP 1

Looking Northwest from Highway 168 about 0.5 Miles Southeast of Aiya Solar Site

Figure 3-16

Existing View from KOP 2

Looking Northwest from Highway 168 about 0.1 Miles Southeast of Intersection with Reservation Road

Figure 3-17

Existing View from KOP 3

Looking Southwest Down Reservation Road from Highway 168 / Reservation Road Intersection

Figure 3-18

Existing View from KOP 4

Looking Southwest Down Reservation Road just Southwest from Highway 168 / Reservation Road Intersection

Figure 3-19

Existing View from KOP 5

Looking Northeast Down Reservation Road about 0.5 mile Southwest of Highway 168 / Reservation Road Intersection

Figure 3-20

Existing View from KOP 6

Looking Southeast Down Highway 168 about 0.2 mile from Highway 168 / Lyttle Lane Intersection

Figure 3-21

Existing View from KOP 7

Looking West from Highway 168 near Highway 168 / Lyttle Lane Intersection

Figure 3-22

Existing View from KOP 8

Looking Northwest from Point on Old Spanish Trail about 2.4 miles Southeast of Solar Site

Figure 3-23

Existing View from KOP 9

Looking Northwest from Point where Old Spanish Trail crosses Hidden Valley Road about 2.3 miles Southeast of Solar Site

Figure 3-24
Existing View from KOP 10
Looking Northwest from Point on Old Spanish Trail about 2.2 miles Southeast of Solar Site

Figure 3-25

Existing View from KOP 11

Looking West from Point Representative of Two Locations on Old Spanish Trail about 2.3 miles South-Southeast of Solar Site

Figure 3-26

Existing View from KOP 12

Looking North from Point Representative of Location on Old Spanish Trail about 2.3 miles South-Southeast of Solar Site

Chapter 4

Environmental Consequences

CHAPTER 4
ENVIRONMENTAL CONSEQUENCES

4.1 Introduction

This chapter analyzes the environmental consequences or impacts expected to occur as a result of implementing the actions described for the Proposed Project and alternatives outlined in Chapter 2. Current conditions, as described in Chapter 3, were used as the baseline for assessing expected direct, indirect, and cumulative impacts to the human and physical/natural environment. Potential impacts considered in this chapter include ecological (such as the effects on natural resources and on the components, structures, and functioning of affected ecosystems), aesthetic, historic, cultural, economic, social, and health impacts.

The Proposed Project and alternatives would be developed both on Tribal lands and BLM administered lands. In addition, a portion of the gen-tie would be located on private lands. **Figure 4-1** shows the footprint of the components analyzed in this section and **Table 4-1** below summarizes the amount of disturbance that would result from each project component.

Table 4-1
Estimated Land Disturbance
Aiya Solar Project Components

Project Component	Temporary vs. Long-Term	Land Jurisdiction (acres)			Total Acres
		Reservation	BLM	Private	
Solar Field	Temporary	50	0	0	50
	Long-Term	575	0	0	575
	Total	625	0	0	625*
Temporary Water Pipeline	Temporary	5	0	0	5
	Long-Term	0	0	0	0
	Total	5	0	0	5
230 kV Gen-Tie	Temporary	10	10	5	25
	Long-Term	5	5	5	15
	Total	15	15	10	40
Access	Temporary	1	0	0	1
	Long-Term	1	0	0	1
	Total	2	0	0	2
TOTAL DISTURBANCE	Temporary	66	10	5	81
	Long-Term	581	5	5	591
	Total	647	15	10	672

*As shown in Figure 2-2, only a portion of the originally evaluated 900-acre solar lease area will be disturbed by the footprint of the solar project.

This EIS assesses and analyzes these potential changes and discloses the impacts to decision makers and the public. This process of disclosure is one of the fundamental aims of NEPA.

The following define and clarify the concepts and terms used in this EIS when discussing the impacts assessment.

Impacts- Impacts may refer to ecological, aesthetic, historical, cultural, economic, social, or health-related changes resulting from construction and operation of the Proposed Project or alternatives. Impacts may be direct, indirect, or cumulative. The terms impact and effect are used interchangeably.

Direct Impacts - A direct effect occurs at the same time and place as the action. Direct and indirect impacts are discussed in combination under each affected resource.

Indirect Impacts - Indirect impacts are reasonably foreseeable impacts that occur later in time or are separated by some distance from the action. Direct and indirect impacts are discussed in combination under each affected resource.

Cumulative Impacts - Impacts on a resource are cumulative when added to the impacts (or anticipated impacts) from other past, present, or future proposed projects in the area of the Proposed Project. The cumulative impacts area may be larger than the direct impacts area.

Residual and Irreversible or Irretrievable Impacts - Impacts are considered residual when the effect from the Proposed Project cannot be completely avoided or minimized and remains after or despite mitigation. Irreversible or irretrievable impacts are generally defined as the commitment of non-renewable resources or resources that are renewable only over very long periods of time and could represent a loss of production, harvest or some use of a natural resource.

Significance, Intensity and Context - “Significant” has a very particular meaning when used in a NEPA document. Significance is defined by the Council on Environmental Quality (CEQ) (40 Code of Federal Regulations [CFR] 1508.27) as a measure of the intensity and context of the impacts of a major federal action on, or the importance of that action to, the human environment. Significance is a function of the beneficial and adverse impacts of an action on the environment.

Intensity refers to the severity or level of magnitude of impact. Public health and safety, proximity to sensitive areas, level of controversy, unique risks, or potentially precedent- setting effects are all factors to be considered in determining the intensity of the effect.

Context means that the effect(s) of an action must be analyzed within a framework or within physical or conceptual limits. Resource disciplines, location, type, duration, or size of area affected (e.g., local, regional, national) and affected interests are all elements of context that ultimately determine significance.

Impact Indicators - Impact indicators are used to determine quality, intensity, and duration of change in a resource. Working from an established existing condition (i.e., the baseline

conditions described in Chapter 3), the indicators would be used to predict or detect change in a resource that would exceed a defined threshold.

Adverse - An adverse effect is negative to a particular resource or a number of resources.

Beneficial - A beneficial effect is positive to a particular resource or a number of resources.

Negligible or No Impact - A negligible or no effect is at the lowest level of detection with change difficult to measure.

Mitigation – Where applicable, mitigation measures are proposed in this document. Mitigation measures are solutions to environmental impacts that are applied in the impact analysis to reduce intensity or eliminate the impacts. To be adequate and effective, CEQ regulations (40 CFR 1508.20) require that mitigation measures fit into one of five categories:

- Avoiding the impact altogether by not taking a certain action or parts of an action;
- Minimizing impacts by limiting the degree or magnitude of the action and its implementation;
- Rectifying the impact by repairing, rehabilitating, or restoring the affected environment;
- Reducing or eliminating the impact over time by preservation and maintenance operations during the life of the action; or
- Compensating for the impact by replacing or providing substitute resources or environments.

The environmental analysis and documents produced in the NEPA process should provide the decision-maker with relevant and timely information about the environmental effects of the decision and reasonable alternatives to mitigate these impacts.

4.2 Climate/ Climate Change

Effects of GHG emissions from the Proposed Project and each alternative are presented in the following sections. Renewable energy projects like this Proposed Project generally have a net beneficial effect on climate change by offsetting older fossil-fired generation.

4.2.1 Indicators

Greenhouse gas impacts from the Proposed Project would affect the environment if they would:

- Generate GHG emissions, either directly or indirectly, that may have a significant impact on the environment and/or hinder the state's goals of reducing GHG emissions

The CEQ issued guidance on February 18, 2010, which states that "if a proposed project would be reasonably anticipated to cause direct emissions of 25,000 metric tons or more of CO_2-equivalent GHG emissions on an annual basis, agencies should consider this an indicator that a quantitative and qualitative assessment may be meaningful to decision makers and the public" (CEQ 2010). CEQ does not propose this as an indicator of a threshold of significant effects, but rather as an indicator of a minimum level of GHG emissions that may warrant some description for agency actions involving direct emissions of GHGs. On December 18, 2014, the CEQ released revised draft guidance for public comment that describes how federal departments and agencies should consider the effects of greenhouse gas emissions and climate change in their NEPA reviews. This guidance explains that agencies should consider both the potential effects of a proposed action on climate change, as indicated by its estimated greenhouse gas emissions, and the implications of climate change for the environmental effects of a proposed action.

EPA has determined through promulgation of the Tailoring Rule that any Proposed Project that increases GHG emissions by more than 75,000 tons per year on a CO_2 equivalent basis would be required to include GHG emission requirements in their permit. As discussed in Chapter 3, the Proposed Project's annual emissions of GHG emissions are expected to be substantially less than the threshold of 75,000 CO_2e tons/year.

4.2.2 Direct and Indirect Effects by Alternatives

4.2.2.1 Proposed Project

Short-term increases in GHGs would result from construction and decommissioning. Exhaust from construction equipment and vehicles would increase ambient concentrations of GHGs. Estimates of GHG emissions during construction, operations, and decommissioning of the Proposed Project were estimated and shown in the tables in Air Quality Section 4.6. This shows that GHG emissions during all phases of the Project will be well below the Clark County and federal air permitting threshold (75,000 tons per year) as well as the draft federal threshold of 25,000 metric tons per year of CO2-e emissions (CEQ 2014).

Operation of the Proposed Project would include combustion emissions from worker commutes, delivery trips, and construction equipment. Ongoing operational emissions of GHGs are estimated to be less than 3,500 metric tons of CO_2e. The loss of desert vegetation and soil disruption associated with the development of the Proposed Project could also have a small effect the ability of the local ecosystem to cycle or sequester carbon and modulate atmospheric CO_2 levels.

However, long-term generation of renewable electricity through solar power would have long-term air quality benefits. In 2010, electrical generation (38 percent) and transportation (34 percent) were the primary contributors to gross GHG emission sources in Nevada – the Proposed Project could reduce these contributions. In addition, the Proposed Project would

support regional and national goals to replace other forms of electricity production that have much higher levels of air pollutant and GHG emissions. The Proposed Project would therefore be consistent with federal and state goals for reducing GHG emissions and the recommendations of the Nevada Climate Change Advisory Committee (NCCAC) Final Report (NCCAC 2008) to support the development of renewable energy.

Therefore, the Proposed Project would not result in significant GHG emissions and would promote federal or state goals to reduce GHG emissions levels.

Climate change that could occur in the future has the potential to affect the Project area. This could include the potential for increased storm flows through the site and to the Muddy River, the potential success of reclamation and restoration efforts after construction and decommissioning, and potential impacts on sensitive species and their habitats. The potential magnitude of these effects cannot be predicted but the Project would employ adaptive management to respond to any changes requiring mitigation.

Any potential future climate changes would not be expected to have a direct effect on the Project as PV projects are designed to operate in a broad range of climatic conditions.

4.2.2.2 Gen-Tie Alternative

Effects to climate and GHG emissions resulting from implementation of this alternative would be similar to those identified for the Proposed Project. The same solar site would be selected and developed and the same BMPs would be employed as mitigation as for the Proposed Project. While this gen-tie alternative would be slightly shorter, it would utilize the same construction methods and mitigation as the proposed gen-tie and have similar but slightly less GHG emissions from construction and decommissioning as the Proposed Project. Like the Proposed Project, these GHG emissions would primarily result from exhaust from construction equipment and vehicles. The beneficial impacts to climate and GHGs from displacing fossil fuel generation would also be the same as the Proposed Project.

4.2.2.3 Water Supply Alternative

Development of the Water Supply Alternative would result in in the same GHG emissions from construction and decommissioning as the Proposed Project. Like the Proposed Project, these GHG emissions would primarily result from exhaust from construction equipment and vehicles. The beneficial impacts to climate and GHGs from displacing fossil fuel generation would also be the same as the Proposed Project.

4.2.2.4 No Action Alternative

Under the No Action Alternative, the Proposed Project would not be built and there would be no direct or indirect effects on climate or emissions of GHGs. There would be no benefit from the

replacement of fossil fuel generated energy with solar generated energy from the Proposed Project.

4.2.3 Residual Effects

Because of the overall decrease in GHGs that would result from the replacement of fossil fuel generation by the renewable energy generated by the Proposed Project, the residual effects on GHG emissions would be beneficial.

4.3 Topography, Geology and Geologic Hazards

This section discusses effects on existing topography, geology, and geologic hazards that could occur with implementation of the Proposed Project or alternatives.

4.3.1 Indicators

The Proposed Project would affect topography, geologic resources or be affected by geologic hazards if it would:

- Be located on a geologic unit that is unstable or would become unstable as a result of the Proposed Project and result in on- or off-site landslides, lateral spreading, subsidence, liquefaction, or collapse;
- Result in physical alteration to topographic features;
- Result in physical alteration of or damage to geologic features; or
- Present a significant threat to public safety due to damage to Proposed Project components by geologic hazards.

4.3.2 Direct and Indirect Effects by Alternatives

To compare effects, this analysis defines the temporal scale (time), spatial extent (area), and intensity of effects for each alternative. All effects discussed in this section are direct. No indirect effects were identified for this resource.

4.3.2.1 Proposed Project

Effects to topography, geology, and geologic hazards that could result from the implementation of the Proposed Project during construction, O&M, or decommissioning activities are discussed below:

1.Geologic unit that is unstable or would become unstable as a result of the Proposed Project and result in on- or off-site landslides, lateral spreading, subsidence, liquefaction, or collapse.

The Proposed Project is located in the Moapa Valley in northeastern Clark County, Nevada. It is characterized by linear, north and south trending valleys and normal fault-block mountain ranges bounded on the southeast by the Muddy Mountains and to the west by the Arrow Canyon mountain range. Extreme rain events can result in the suspension and transportation of sand, gravel, or even boulders, which can cause structural damage. Earthquakes can result in landslides in the region but the site has a low susceptibility to landslides because of its flat topography.

No construction or operational activity would alter the stability of the site or along the gen-tie corridors. Generally, the natural terrain and its existing drainage system around the site and relatively minimal grading on the site would facilitate natural drainage through the area. The relatively flat terrain would limit the movement of sediments during large precipitation events. Therefore, it is not likely that the geologic unit would become unstable as a result of the Proposed Project. In addition, all excavations associated with the Proposed Project would be filled with approved soil or foundation material.

The presence of subterranean void spaces can contribute to subsidence, landslides, and/or collapse. The Proposed Project would not create this condition, would not increase the geologic instability of the area, and would not increase the risk of on- or off-site landslides, lateral spreading, subsidence, liquefaction, or collapse.

2. Physical alteration to topography

The solar site would be graded where necessary and otherwise prepared using the “disk-and-roll” technique for site preparation but, because it is relatively flat, contour changes would be minor and would not create a long-term significant effect to site topography. The project may include berms located adjacent to Reservation Road to mitigate the visual impact of the project. The construction of the berms would take up approximately 100,000 cubic yards of soil that would come from balance with site grading or from a borrow pit that would be approximately 2 acres in size (assuming about 3 feet in depth). No large scale excavations would take place for the construction of the Proposed Project so only negligible effects on topography would occur.

3. Physical alteration of or damage to geologic features.

To provide water for construction of the Proposed Project, an intake in the Moapa River and an approximately two-mile above-ground water pipeline would be installed and operated temporarily for the duration of the 12 to 15 month construction period. Operational water would be provided via the existing Moapa Valley Water District (MVWD) water pipeline that crosses the site. No effects to subsurface geologic features would occur. No unique geologic features were identified on the site so geologic features would not be affected.

4. Proposed Project components damaged by geologic hazards present a threat to public safety.

As indicated in Section 3.3.3, the Proposed Project lies within an area with moderate to high potential for strong earthquake shaking. The USGS indicates there is a 40 percent chance of a magnitude 5.0 or greater earthquake in the Proposed Project area in the next 50 years.

An earthquake could cause structural damage to the solar facilities, gen-tie line, access roads, and water pipeline. However, all Proposed Project structures would be required to comply with applicable seismic building codes reducing the potential for earthquake-related structural damage components of the Proposed Project. Because the site would be fenced with restricted access, only Project employees would be exposed to potential earthquake damage at the facility.

Damage to on-site structures or down-gradient areas from flash floods would not be expected because of the relative flatness of the site and surrounding area, the absence of well-defined drainages on site, and a site design that would incorporate drainage control to protect against floods.

Compliance with Clark County seismic building codes and maintenance of the natural drainage would minimize potential risk associated with the geologic hazards in the area. With proper construction engineering and BMPs, potential short- or long- term adverse effects would be reduced so they would be short-term and localized.

4.3.2.2 Gen-Tie Alternative

Effects to topography, geology, and geologic hazards resulting from implementation of this alternative would be similar to those identified for the Proposed Project. The same solar site would be graded and developed and the same BMPs would be employed as mitigation as for the Proposed Project. While this gen-tie alternative would be slightly shorter, it would be located on the same land forms and geologic formations and would utilize the same construction methods and mitigation as the proposed gen-tie.

4.3.2.3 Water Supply Alternative

Effects to topography, geology, and geologic hazards resulting from implementation of this alternative would be similar to those identified for the Proposed Project. The same site and ROWs would be graded and developed and the same BMPs would be employed as mitigation as for the Proposed Project. Withdrawal of up to 500 AF of water from a new well on the Project site would have no effects to subsurface geologic features.

4.3.2.4 No Action Alternative

Under this alternative, development of the Project would not occur so there would be no effect on topography or geologic hazards.

4.3.3 Residual Effects

Given that there would be no direct or indirect impacts associated with topography, geology or geologic hazards, there would be no residual impacts from the Proposed Project.

4.4 Soils

This section discusses effects on soil resources that would occur as a result of implementation of the Proposed Project or alternatives. The indicators used to identify and analyze effects are presented, and potential effects and agency-recommended mitigation measures are discussed.

4.4.1 Indicators

The Proposed Project would affect soil resources if it would:

- Increase erosion rates;
- Reduce soil productivity by compaction or soil mixing to a level that would prevent successful rehabilitation and eventual reestablishment of vegetative cover to the recommended or preconstruction composition and density; or
- Increase exposure of human or ecological receptors to potentially hazardous levels of chemicals or explosives due to the disturbance of contaminated soils or to the discharge or disposal of hazardous materials into soils.

4.4.2 Direct and Indirect Effects by Alternatives

To compare effects, this analysis defines the temporal scale (time), spatial extent (area), and intensity of effects for each alternative. All effects discussed in this section are direct. No indirect effects were identified for this resource area.

4.4.2.1 Proposed Project

Implementation of the Proposed Project could result in effects to soils that are detailed below, along with corresponding mitigation measures that would reduce effects.

1. Increase in soil erosion rates.

Several factors affect the potential for soil erosion by water or wind including soil texture, the length and percent of slope, vegetative cover, and intensity of rainfall or wind. Development of the Proposed Project would affect up to approximately 672 acres of land that would be cleared and compacted (or graded where necessary) during the two-year construction period.

Generally, undisturbed soils in the area are not susceptible to wind erosion because of the presence of desert pavement on the soil surface and the presence of vegetation. During construction, the Applicant would clear and use the “disk and roll” site preparation technique within the solar field boundary. A small amount of grading would be required for the on-site roads and access ways, the onsite substation, and O&M Facilities. Approximately 95 percent of the solar site would be prepared using the disk and roll method with only about 5 percent expected to need some amount of grading.

Disturbance of the transmission line ROW would be limited to areas necessary for pole construction. Existing access roads would be used to access pole construction areas. Clearing would be required along the pipeline right of way. Existing roads would be used to access the pipeline right of way. Clearing and grading would be required for the short access roads associated with the Proposed Project. This removal of the vegetation and soil crusts by grading and “disk and roll” would expose soil and increase the potential for wind and water erosion. Undisturbed areas within the solar site and transmission and pipeline ROWs would maintain their current susceptibility to water and wind erosion. The Proposed Project site is relatively flat, but it has the potential for high winds and infrequent strong rains that could cause erosion.

To reduce the potential for water erosion, the Applicant would develop an erosion control and stormwater drainage plan as part of the final Project design and this would be incorporated into the stormwater pollution prevention plan (SWPPP). The drainage plan would incorporate existing natural off-site washes to allow the stormwater flow to pass through the site naturally. The drainage control features on-site would include berms with armoring of stormwater channels within the solar field and rock weirs, gabions, soil cement, or rip rap lining within existing drainage channels to help dissipate flow energy to minimize scour and erosion. These features would be designed to protect the integrity of existing drainages and not channelize all flow within the site.

Construction of the erosion and stormwater control system would reduce water erosion susceptibility within the project area. To further ensure that soil erosion is minimized, the Applicant would incorporate a series of BMPs into the Proposed Project (the BMPs are outlined

in Sections 5.2 and 5.3). Implementation of these BMPs would reduce localized soil impacts resulting from wind and water erosion but would not eliminate all soil loss within the Proposed Project.

Wind erosion would be increased due to the removal of vegetation within the Proposed Project areas impacted by construction. This would likely result in a localized loss of topsoil.

2. Reduce soil productivity.

The soils that occur within the Proposed Project footprint provide support for desert vegetation and provide wildlife habitat. Impacts to local flora and fauna are discussed in Section 4.6, Biological Resources Impacts. The disk and roll technique using conventional farming equipment would be used generally to prepare the surface of the most of the solar field for post and PV panel installation. There would be limited use of scrapers to perform micrograding in areas where the terrain is not suitable for disk and roll. Salvaged soil would be held on-site until it is used for restoration. Soil productivity may be negligibly affected if BMPs as discussed are implemented.

3. Increase exposure of contaminated soils.

The Proposed Project site does not contain any contaminated or hazardous soils. The applicant would use native soil for on-site construction. Other materials such as gravel and concrete needed for construction would be suitable for construction purposes and free of contamination.

4.4.2.2 Gen-Tie Alternative

Effects to soils resulting from implementation of this alternative would be similar to those identified for the Proposed Project. The same solar site would be prepared and developed and the same BMPs would be employed as mitigation as for the Proposed Project. The alternative gen-tie route would be located on the same soil types and would utilize the same construction methods and mitigation as the proposed gen-tie. While this route alternative would be slightly shorter, the portion of the route on the Reservation does not parallel an existing ROW for as much of its distance as the proposed gen-tie, so some new road construction along the route on the Reservation would be necessary. As a result, soil disturbance on the Reservation would be approximately the same as the proposed gen-tie. The portion of the line on BLM-administered lands and private lands would be the same as the proposed gen-tie.

4.4.2.3 Water Supply Alternative

Effects to soils resulting from implementation of the Water Supply Alternative would be the same as those identified for the Proposed Project. While this alternative would eliminate the need for the temporary water pipeline associated with the Proposed Project, this pipeline would be placed above-ground with no disturbance/grading of surface soils. Therefore, it would result in the same general susceptibility to wind and water erosion as the current condition. The same site and ROWs would be prepared and developed and the same BMPs would be employed as mitigation as for the Proposed Project.

4.4.2.4 No Action Alternative

Under the No Action Alternative, the Project would not be constructed so there would be no effects on soil resources.

4.4.3 Residual Effects

Construction, operation, and decommissioning of the Proposed Project would increase the potential for soil loss through wind and water erosion. The Applicant would design an extensive water erosion control system and would implement BMPs, but some localized soil erosion would occur. These residual soil erosion impacts would be most common on dry, windy days, when wind erosion on the solar site would be greatest, and during flash flood events larger than the 100-year flood, when water volume may exceed the capacity of the flood control system. These impacts would be localized to the Proposed Project area and only occur during unique climatic conditions.

4.5 Water Resources

This section discusses effects on water resources/hydrology that could occur as a result of implementation of the Proposed Project or alternatives.

4.5.1 Indicators

The Proposed Project would affect water/hydrology resources if it would:

- Decrease water supply;
- Degrade water quality such that it is no longer suitable for its intended use;
- Degrade the quality of surface water by increasing erosion, increasing sedimentation, or introducing contaminated waters; or
- Increase the potential for flood hazards.

4.5.2 Direct and Indirect Effects by Alternatives

To compare effects, this analysis defines the temporal scale (time), spatial extent (area), and intensity of effects for each alternative. The effects discussed in this section are both direct and indirect.

4.5.2.1 Proposed Project

1. Potential to decrease water supply.

The Proposed Project would require up to 500 AF for the 15-month construction period and up to approximately 5 acre-feet per tear (AFY) for O&M activities.

Water is needed primarily for dust suppression and soil compaction during construction. During operation, water would only be needed for panel washing, fire protection, dust control, and worker daily consumptive uses. For construction, water would be supplied via a new temporary intake installed in the Muddy River and a new temporary above-ground pipeline, approximately two miles in length to be constructed just outside the existing ROW of Reservation Road. The relatively small amount of water needed during operations would be provided via a tap into the Moapa Valley Water District (MVWD) pipeline that crosses the solar site.

The Project's construction water requirements will be met from existing surface water rights to 3,700 AFY of flows in the Muddy River owned by the Moapa Band of Paiutes. The project will secure access to this water supply though an agreement with the Tribe. The temporary intake structure would most likely be a mounted centrifugal pump capable of pumping up to 500 gallons per minute (gpm) and would be located adjacent to the Muddy River with a flexible and/or rigid pipe intake located in the Muddy River.

Muddy River flows in Water Year 2013 were 28,070 AFY (38.8 cubic feet per second [cfs]) at the Warm Springs Road gaging station (officially known as USGS 09416000 Muddy River Near Moapa), NV), located about 4 miles upstream of the proposed withdrawal location. The withdrawal of 500 AF for the 15-month construction period would represent approximately 2 percent of the total average flow. The maximum withdrawal rate of up to 500 gpm is equivalent to about 1.1 cfs or 3 percent of the total average flow rate.

The relatively low amount of water used (2 to 3 percent) and the short duration of use (15 months) would not be expected to impact downstream water users. Also the 500 AF is only a small part of the Tribe's 3,700 AFY water right on the Muddy River.

2. Potential to degrade water quality such that it is no longer suitable for its intended use.

Spills of chemicals and petroleum products can degrade water quality such that it is no longer suitable for its intended use. The Proposed Project would use small amounts of hazardous

materials during construction and operation. Petroleum spills would be possible while refueling equipment during construction and operation of the Proposed Project. During construction, the temporary pump providing water from the Muddy River would be located on a pad near the river with an intake pipe in the river. The pump would be surrounded by a catchment basin that would capture any spilled or leaked fuel.

Transformers would be located throughout the PV solar field and at the onsite substation. Transformers at the substation would require insulating oil and would be installed with secondary containment. The transformers within the PV field each would contain 250-300 gallons of mineral insulating oil.

Groundwater is located around 200 to 400 feet below ground surface. The Project Spill Prevention, Countermeasure and Control (SPCC) Plan would be developed and implemented to minimize impacts from spills during construction and operation. Adequately-sized secondary spill containment would be incorporated with transformers at the on-site substation to ensure proper capture and control measures for potential spills. An emergency response plan would also be developed to respond to any emergencies including leaks and spills during construction. This, in combination with the depth to groundwater, makes it unlikely that any surface spill would infiltrate the groundwater so the potential for impacts is minor.

3. Potential to degrade the quality of surface waters by increasing erosion, increasing sedimentation, or introducing contaminated waters.

Surface water quality can be degraded by increasing rates of erosion and sedimentation, introducing contaminants, violating water quality standards, or otherwise changing the character of surface waters. The Proposed Project would be within the Mojave Desert where there is very little precipitation. There are no perennial water bodies within the Proposed Project site. As described above, the Applicant's emergency response plan (construction phase) and SPCC Plan (operation phase) would minimize impacts from these sources by providing for hazardous material spill prevention and clean-up measures were a spill to occur so that potential impacts would be minor. Once decommissioning has occurred and vegetation has reestablished, erosion would naturally be controlled, so the impact would be long-term (life of the project) but also temporary.

There would be potential for increased erosion or sedimentation on-site or off-site due to Proposed Project construction and O&M activities. Although there are no perennial water bodies within the Proposed Project, there are ephemeral drainages (dry washes) in the Proposed Project area that flow ultimately into the Muddy River south and east of the solar site. It is expected that bed loads and suspended loads would be high during significant storm events. As discussed in Chapter 3, because of the isolated topographic position of the site, there are no significant drainages on or near the site flowing onto or off of the site. The Project has been configured to avoid construction within the largest washes located in the northeastern part of the Project site and the drainage plan has been designed to allow all surface flows upstream of the site to flow to the ephemeral drainages downstream of the site. The drainage patterns on-

site would be maintained and this would help the habitat within them to re-establish following construction, would help maintain their drainage functions, and would help reduce erosion and sedimentation impacts. In addition, avoidance of grading these drainages would result in reduced construction costs and improvement to the effectiveness of post-closure reclamation.

The preliminary hydrologic modeling conducted for the project (Louis Berger 2015) shows that in general, the flow depths on the site after development of the Project remain similar or less than the pre-development conditions. Where the flow is gathered by the channel in the northwest corner, the flow depth through the array area is reduced and flows around the array. Due to the addition of the arrays, the velocities throughout the array area did not increase significantly and tended to increase slightly in the downstream features.
A preliminary grading plan was prepared to evaluate the existing topography and the earthwork required to develop the site and perpetuate the existing drainage patterns. The slope criteria used to evaluate the existing topography and grade the site was: a maximum slope east to west of 5 percent, sloping up to the north at 1.75 percent, and sloping up to the south at 3 percent. The existing topography on the majority of the site meets these slope criteria so the disk and roll technique would be used to for the great majority of the site. The areas that will require grading to prepare the site for development would be localized and the total volume of earthwork required is estimated to be approximately 33,400 cubic yards.

The Applicant would also incorporate construction-phase erosion and sediment control measures consistent with regional BMPs and Federal, state, and local regulations including the Proposed Project's General Permit (issued by EPA) and SWPPP. These measures would control erosion and sediment transport during construction and are outlined in Sections 5.2 and 5.3.

There would likely be effects that last beyond the construction period and terms of the General Permit and SWPPP. Although the Applicant proposes to maintain existing drainage patterns in and around the solar field, construction and operation of the Proposed Project activities would change natural runoff patterns and erosion and deposition.

Construction activities causing ground disturbance, such as grading and "disk and roll" would disrupt the soil surface and dislodge biological crusts that bind soil together. These activities would likely have long-term adverse effects on the quality of local surface water flowing to the drainages downstream of the Proposed Project. Minimizing disturbance on the solar site to only those areas where necessary would reduce the surface area subject to increased erosion.

Across the Proposed Project area, drainage occurs as sheet flow and in small shallow washes. Under the proposed drainage plan, channels would be constructed at two locations in the northeast portion of the Project site to direct the surface flow through and around the Project site and back into the drainages that lead to the Muddy River downstream of the site. Concrete weirs, rock gabion, soil cement, or rip rap may also be used within the onsite drainages to control flash flooding downstream and reduce sediment transport.

The Applicant would develop and implement erosion and sedimentation control measures to be used to minimize impacts during the life of the Proposed Project. At a minimum, these controls would include:

- Soil stabilization measures to offset loss of vegetation;
- Biannual and post-storm monitoring of erosion and sedimentation; and
- Adaptive management of actions if erosion and sedimentation control measures are found to be insufficient to control surface water collection on or at the site.

The erosion and sediment control measures and SWPPP would be approved prior to the beginning of Proposed Project construction and potential impacts would be minor. Once decommissioning has occurred and vegetation has reestablished, erosion would naturally be controlled, so the impact would be long-term (life of the project) but also temporary.

4. Potential to increase the potential for flooding hazards.

Development could result in an increase in flooding hazard if it were to:

- Impede or redirect flood flows;
- Cause inundation or additional risk associated with a debris flow; or
- Otherwise increase the rate or amount of surface water leaving the site.

Flood hazards can increase due to multiple factors, including alteration of the natural drainage of an area to prevent adequate water flow, reducing the area within which precipitation and runoff infiltrate, and increasing the impervious surface area in a region. The drainages in the Project area drain into the Muddy River to the south. In order to reinforce the existing drainages and prevent lateral channel migration over the life of the Proposed Project, the Applicant would construct two short drainage channels in the northeast portion of the solar site as shown on **Figure 2-2**. These channels would be designed to accommodate the 100-year flood event and include riprap to minimize scour. These two drainage channels would divert flows around project facilities but would not change flow volume and would not redirect flows to new locations off-site. Hydrologic analyses for pre- and post-conditions for the 100-year flood event indicate that development of the site could increase the peak flows only slightly and would not have a significant effect on flood conditions on the site or downstream of the discharge points (Louis Berger 2015).

To decrease downstream peak flows, concrete weirs, rock gabions, soil cement, or rip rap would be placed within the major drainages on the solar site at key locations to minimize velocity and decrease sediment transport. Sediment deposits on the upstream side of the gabions would be manually maintained throughout operations to ensure minimal downstream sedimentation.

Flows resulting from extreme rain events can suspend sand, gravel, or even boulders, and transport them downstream or downslope, resulting in damage to structures impacted by flood waters (USGS 2001). The Proposed Project site is located on a relatively flat area and flooding

is considered unlikely. The Proposed Project solar site does not contain any FEMA flood zones (**Figure 3-3)**. Also, flows from the Project site would not impact the areas that were affected by the 2014 flood that occurred in the area. As mentioned above, development of the site would not affect flood flows off-site. In addition, off-site flows are regulated by culverts under the UPRR.

No damage to gen-tie structures would be expected to occur as the foundations would be designed to withstand the low-velocity flooding associated with the playa. This conclusion is supported by the presence of the other existing transmission lines in this area. With proper implementation of these mitigation measures, including adaptive management of practices, effects related to flooding would be reduced to negligible levels.

Water quality impacts that would result from development of the water pipeline and transmission lines would be minimal and temporary. No permanent structures would be placed within ephemeral washes outside of the solar site boundary.

4.5.2.2 Gen-Tie Alternative

Effects to water resources resulting from implementation of this alternative would be similar to those identified for the Proposed Project. The same solar site would be graded and developed and the same BMPs would be employed as mitigation as for the Proposed Project. This gen-tie alternative would utilize the same construction methods and mitigation as the proposed gen-tie. While the portion of this route alternative on the Reservation would be slightly shorter, pole siting and construction would be designed to span local drainages the same as the proposed gen-tie. The portion of the line on BLM-administered lands and private lands would be the same as the proposed gen-tie.

4.5.2.3 Water Supply Alternative

The entire flow of the Muddy River is derived from the discharge from the regional carbonate aquifer, except during infrequent precipitation events that increase River flows for up to a few days. Historic flow records indicate that about 51 cubic feet per second (cfs) of groundwater discharge sustain the spring and river flows. Currently, consumptive uses related to (1) natural evapotranspiration, (2) surface-water diversions, and (3) groundwater diversions reduce the Muddy River flows to about 25,000 AFY (35 cfs) at the Warm Springs Road gaging station, located about 3 kilometers (km) downstream of the spring area.

Several groundwater models have been created to predict the range of potential impacts resulting from the withdrawal of groundwater from the regional aquifers including up to approximately 800 AFY over a period of 30 years associated with the Moapa Solar Energy Center (BIA 2014). Several regional groundwater scenarios were evaluated based on current uncertainty about connectivity between portions of the modeled area and the role of adjacent areas on the edges of the modeled area. Estimates of flow reduction from the withdrawal of 800

AFY continues over a 30-year period ranged from a 0.16% reduction in 10 years (and 0.22 percent reduction in 75 years) to a 0.96 percent reduction in 10 years (and 1.94 percent reduction in 75 years). Experimental and observation evidence suggest that the model predicting the lowest impacts is likely the most plausible. Thus, for the purposes of this analysis the values of 0.16 percent in 10 years and 0.22 percent in 75 years were used. These reductions would result in flows in the Muddy River of 40.44 cfs in 10 years (40.41 cfs in 75 years), compared to the baseline flow of 40.5 cfs in 2001.

The above estimates were based on use of 800 AFY for over 30 years for the Moapa Solar Energy Center (MSEC) project if it were to be developed as a CSP solar facility which would require that amount of water. Ultimately, this project was approved as a PV project that would use only a very small fraction of this water. Therefore, the use of 500 AF of groundwater for the short (15-month) construction period for the Proposed Project under the Alternative Water Supply is adequately captured in this previous analysis. Therefore, impacts from the use of groundwater under this alternative would not be expected to be noticeable.

Groundwater is located around 200 to 400 feet below ground surface. The Project SPCC Plan would be developed and implemented to protect the environment from petroleum product and other spills during operation. Adequately-sized secondary spill containment would be incorporated with transformers at the on-site substation to ensure proper capture and control measures for potential spills. An emergency response plan would also be developed to respond to any emergencies including leaks and spills during construction. Successful implementation of these measures would minimize the potential for a spill and minimize the impact of any spills that occur. This, in combination with the depth to groundwater, makes it unlikely that any surface spill would infiltrate the groundwater so the potential for impacts is minor.

4.5.2.4 No Action Alternative

Under the No Action Alternative, the Proposed Project would not be constructed so there would be no effects on water resources hydrology and water quality.

4.5.3 Jurisdictional Waters, Drainages, and Riparian Areas

The USACE asserts jurisdiction over traditional navigable waters of the United States and wetlands adjacent to those waters (adjacent means ‘bordering, contiguous, or neighboring’) and over non-navigable tributaries with relatively permanent flows. It is expected that the USACE would possibly assert jurisdiction over a few of the ephemeral drainages located within the solar site boundary and along the gen-tie route (**Appendix F**).

Jurisdictional waters within the solar site boundary have been avoided to the extent possible in the layout and design of the solar project which would affect approximately 700 acres of the 900-acre lease area that was originally surveyed. Jurisdictional waters outside of the solar site boundary would potentially be impacted along the associated gen-tie ROW primarily from the

upgrading of existing or the establishment of new access roads along the ROW. Pole location for the gen-tie would be located outside defined drainage channels so the drainages would be spanned by the line.

As detailed in **Appendix F** and summarized in **Table 4-2** below, the jurisdictional waters that would be impacted for both the solar site and the gen-tie would be low.

TABLE 4-2
Summary of Impacts to Potentially Jurisdictional Waters

Drainage ID	*Area of Impact (acres)*
Solar Facility	
M01	0.02
M02	0.12
M03	0.03
M04	0.10
Total	**0.27**
Gen-tie Line[1]	
M11	0.01
M12	0.02
M13	<0.01
M16	<0.01
M17	0.04
M18	0.01
M24	0.01
M25	<0.01
M27	0.01
M28	<0.01

[1] Assumes 20-foot disturbance area for access road within gen-tie corridor where an access road would be needed.

These two primary project components (solar field and gen-tie) would be covered by different Nationwide Permits (NWP). The solar site would be covered under NWP 51 – Land-Based Renewable Energy Generation Facilities. The gen-tie line and associated facilities (access road, pads, etc.) would be covered under NWP 12 – Utility Line Activities. Each separate distinct crossing of a waterbody for the gen-tie would be treated as a separate and complete project under Nationwide Permit 12.

Nationwide Permit 51 has a limit of 0.5 acres of impacts to jurisdictional waters. As shown in **Appendix F**, the Proposed Project would impact approximately 0.27 acres, well under the limit.

Nationwide Permit 12 limits impacts to jurisdictional waters to 0.5 acres for each separate and distinct project. As shown in **Appendix F**, Each gen-tie crossing associated with the Proposed Project would impact less than 0.05 acres, well under the limit.

The removal of vegetation could result in increased erosion and sedimentation, resulting in the degradation of water quality within the drainages. During construction and routine O&M, the use of roads that cross desert washes could affect drainages by crushing vegetation and increasing erosion. The use of vehicles and equipment to cross these washes could also result in degradation of water quality from the potential introduction of hazardous materials such as fuels and oils.

If the drainages within the Proposed Project area cannot be avoided, adverse impacts would be both short- and long-term. Disturbance of washes could include alterations to the hydrological functions of the natural channels such as adequate capacity for flood control, energy dissipation, sediment movement; and habitat for desert species. Two diversion channels are proposed to be built along the northeast corner and in the southeast portion of the solar field and would result in localized and negligible direct and indirect impacts. These potential impacts would be avoided in the drainage sections being diverted. The Applicant would design these drainage improvements and any drainage crossings to accommodate estimated peak flows and ensure that natural volume capacity can be maintained throughout construction and upon post-construction restoration. It is expected that proper design would minimize the amount of erosion and degradation to drainages.

The potential for any of these drainage impacts to affect the Muddy River would be negligible because of the very small acreage involved, the distance to the river, and the BMPs that would be applied to the design of these features.

4.5.4 Residual Effects

Residual effects on water resources or hydrology resulting from implementation of the Proposed Project or alternatives include: (1) a reduction in groundwater availability for other uses in the Basin (up to 500 AF), (2) localized increases in sedimentation and scour in Proposed Project drainages, and (3) a higher volume of concentrated storm water due to drainage structures.

4.6 Air Quality

This section discusses effects on existing air quality that may occur with construction, operation, and decommissioning of the Proposed Project.

During the process of construction, operation, and decommissioning of the Proposed Project, emissions of regulated air pollutants from specific types of area sources (i.e., fugitive dust and mobile source fuel combustion) have the potential to affect air quality. Impacts to air quality are discussed in terms of project emissions of criteria air pollutants and compliance with air quality

regulations and standards. As discussed below, the impacts associated with the Proposed Project are anticipated to be below all applicable thresholds that define any noticeable change to air quality or the local/regional climate.

Emissions common to all Action Alternatives would consist of carbon monoxide (CO), nitrogen dioxide (NO_2), inhalable particulate matter (PM_{10}), fine particulate matter ($PM_{2.5}$), sulfur dioxide (SO_2), volatile organic compounds (VOC), and hazardous air pollutants (HAP). Sources of emissions from the Proposed Project would include:

- Fugitive dust from vehicle travel on unpaved surfaces, during construction, operation and decommissioning,
- Fugitive dust from vehicle travel on paved surfaces, during construction, operation and decommissioning,
- Vehicle exhaust emissions during construction, operation, and decommissioning (both on-road vehicles and construction equipment),
- Windblown dust from disturbed areas during construction, operation, and decommissioning,
- Fugitive dust from site preparation and vegetation removal during construction,
- Fugitive dust from excavations during construction and decommissioning,
- Stationary sources during operation consisting of the following:
    - Emergency diesel generator and fire water pump engines
    - Sulfur hexafluoride (SF_6) leakage from substation circuit breakers

These impacts are described in terms of total project emissions compared to current emissions for Clark County and the probability of causing or contributing to existing exceedances of National Ambient Air Quality Standards (NAAQS).

Air emissions associated with the proposed construction and decommissioning of the Proposed Project would be primarily short-term and mainly associated with engine exhaust from construction equipment and fugitive dust. Smaller contributions to air emissions would be generated from on-road travel of vehicles for commuting workers and delivery of materials and equipment to the Proposed Project's construction site. It is expected that decommissioning phase would result in similar but less emissions than construction. Emissions of air pollutants during the operational phase would primarily result from commuting workers and delivery of materials/equipment to the site and would be significantly less than the construction and decommissioning phase. Emergency generators and fire pumps that could possibly be used would also generate emissions but only during emergencies or testing. Fugitive dust emissions would occur during operations but not from vegetation clearing, excavation and grading as these activities would not occur during this phase of the Project.

If there are no other potential sources of emissions other than fugitive PM emissions from construction activities and from unpaved and paved roads, a New Source Review (NSR) permit would not be required prior to construction on tribal land in EPA Region 9. To determine whether a new source would otherwise require an NSR permit, the applicability test requires

that sources estimate their potential to emit each of the regulated NSR pollutants. In making this estimation, only sources that belong to one of 28 source categories listed pursuant to section 302(j) of the Clean Air Act are required to include fugitive emissions to the extent that they are quantifiable (40 CFR 49.153 (a)(1)). These source categories are codified in 40 CFR 52.21(b)(1)(i)(a). None of these listed source categories include solar panel arrays. Therefore, because this facility is not one of the source categories that would be required to include fugitive emissions in its applicability determination, and because there do not appear to be any other emissions that would otherwise trigger NSR review, no NSR permit would be required.

Construction of the Proposed Project would require 12 to 15 months to complete and would generate emissions of: CO, NO_x, VOCs, SO_2, PM_{10} and $PM_{2.5}$. Ozone is not emitted directly but is created in the atmosphere via a chemical reaction between NO_x and VOCs in the presence of sunlight. NO_x and VOCs are referred to as ozone precursors.

4.6.1 Indicators

A Proposed Project could affect air quality if it would:

- Violate any air quality standard or contribute substantially to an existing or proposed projected air quality violation, result in a cumulatively considerable net increase of any criteria pollutant for which the Proposed Project region is in non-attainment under an applicable federal or state ambient air quality standard, or expose sensitive receptors to substantial pollutant concentrations.

4.6.2 Direct and Indirect Effects by Alternative

4.6.2.1 Proposed Project

Construction. Exhaust and fugitive dust emissions generated from construction equipment and mobile sources would increase ambient concentration of regulated air pollutants. Fugitive dust would be generated from disturbed areas by construction activities and travel on paved and unpaved roadway surfaces and can impact visibility or contribute to violations of air quality standards if not properly managed. However, the emissions of engine exhaust and fugitive dust associated with constructing and decommissioning the Proposed Project are not expected to contribute to local or regional exceedances of criteria air pollutant NAAQS.

Fugitive emissions due to land-disturbing activities (such as vegetation removal, compaction, and grading) would be intermittent and generally low-level releases, and consist of larger dust particles that are expected to settle out of the atmosphere within close proximity to their release point. Therefore, long-range transport of fugitive particulate emissions from land disturbance is not anticipated. The Project area is within the HA 218 (California Wash) and the HA 205 (Lower Meadow Valley Wash) airsheds which are in attainment for all criteria pollutants. For these reasons, vehicle equipment emissions and fugitive emissions from land-disturbing activities are not expected to result in or contribute meaningfully to exceedances of ambient air quality standards locally or within the adjacent non-attainment area.

The Proposed Project would implement BMPs that would be identified in the fugitive dust control plan to minimize the resultant impacts to local and regional air quality. To comply with Clark County dust control requirements where applicable, the applicant would use the BMPs required by the County (i.e., water) for dust control. Only water and agency-approved palliatives can be used for dust control within potential threatened and endangered (T&E) species habitat such as desert tortoise habitat. Any application of palliative or other dust reducing agent other than water would need to be approved by the regulatory authorities.

In addition, the Applicant would limit ground disturbance on the solar site to only those areas where necessary. This would reduce the surface areas subject to increased erosion by minimizing surface disturbance and maximizing the number of areas where the existing surface or desert pavement would be maintained along with any existing vegetation. Desert pavement occurs where soils of mixed particle size have been eroded of fines leave a stony surface behind**.** The pavement of stones along with the remaining vegetation would help protect the underlying surface from wind erosion.

The Proposed Project would implement the following BMPs for fugitive dust and wind erosion control:

- Minimize ground disturbance and vegetation removal, and limit ground disturbance during construction to the time just before module support structure installation;
- Limit vehicular speeds on non-paved roads (Clark County ordinance speed limit is 25 miles per hour);
- Apply water to disturbed soil areas of the Proposed Project to control dust and to maintain moisture level at optimum levels for compaction, as needed. Water would be applied using water trucks. To prevent runoff and ponding, water application rates would be minimized;
- Cover exposed stockpiled material areas during windy conditions (forecast or actual wind conditions of approximately 25 miles per hour or greater), apply dust control measures to construction access roads to adequately control wind erosion;
- During periods of high wind, suspend excavation and grading;

- Cover all trucks hauling soil and other loose material or maintain at least 2 feet of freeboard; and
- All paved roads would be kept clean of amounts of mud, dirt, or debris, as necessary. Gravel or other similar material would be used where dirt access roads intersect the paved roadways to prevent mud and dirt track-out.

The closest sensitive receptors to the site are approximately 0.5 miles southwest of the site. This location is at an elevation about 100 to 150 lower than the site and upwind of the prevailing winds in the area. Likewise, there are no sensitive receptors located near where the construction activities associated with the transmission line would take place. The temporary water pipeline, while located in the community adjacent to Reservation Road, would be placed above-ground so there would be no significant construction associated with its initial placement or removal.

Estimates of air pollutant emissions during construction, operation, and decommissioning were developed and are presented in **Tables 4-3** through **4-5**. Detailed emission calculations for construction, operation, and decommissioning which break-down each emission category and pollutant by source type (such as excavation and grading from construction) are presented in **Appendix I**.

Based on the estimated yearly construction and decommissioning emissions totals for O_3 precursors (NO_x and VOCs) associated with the Proposed Project would be less than de minimis thresholds (100 and 50 tons/year, respectively) as specified under the Federal General Conformity Rule (40 CFR 93). Therefore, the Proposed Project-related emissions are assumed to conform to the SIP and the regional air quality plans. Overall, the Proposed Project is anticipated to result in minor, direct, short-term air quality impacts during construction and during decommissioning. In addition, GHG emissions during the construction and decommissioning phases would be well below the Clark County and federal air permitting threshold (75,000 tons per year) as well as the draft federal threshold of 25,000 metric tons per year of CO2-e emissions (CEQ 2014).

<u>Operations.</u> During its operational phase, the Proposed Project would generate emissions of regulated air pollutants associated with exhaust from the emergency fire pump, back-up generators (if used), mobile combustion emissions from workers and deliveries, SF_6 leakage from substation circuit breakers, and limited fugitive dust from O&M activities.

The Proposed Project would require an operational workforce of approximately five (5) full-time employees. O&M would require the use of vehicles and equipment including trucks for on-site security/work and potential panel washing, and all-terrain vehicles for minor equipment maintenance. Additional maintenance equipment would include forklifts, bobcats, and water trucks for general lifting, drainage maintenance, and daily dust control.

Ongoing emissions of regulated air pollutants associated with operation of the Project would be relatively minor over the duration of its operational phase (long- term) as discussed below.

There would be no large combustion sources on-site. Fugitive dust emissions would continue from O&M vehicles traveling on the paved and gravel roads. During Proposed Project operation, dust management needs would be minimal as fugitive dust- generating activities such as vehicle traffic are limited. Vehicular traffic during operations is primarily related to periodic inspections and repairs to equipment.

Also, the panels themselves would function as wind breaks and shield the ground from prevailing winds so surface soils could be less disturbed by windy conditions. Because of their relatively fixed orientation and placement low to the ground, the panels would provide a break in the aerodynamic surface near the ground diverting and slowing winds across the solar field similar to the way that snow fences or planted vegetation function as wind breaks (NRCS USDA 2013, USEPA 2013). Barriers obstructing the path of the wind reduce momentum transferred to the surface and, thus, surface shear stress. That is done by deflecting the flow upwards and dissipating some of its energy in frictional losses. The amount of protection provided would depend on the angle of the panels and the direction and speed of the wind at any given time. Because the presence of the solar panels would mitigate wind erosion of disturbed surfaces, it was assumed that these emissions would be negligible and were not included in the operational phase emission estimates.

The following practices would be implemented, as necessary, to further reduce the potential for fugitive dust during plant operation:

- Vehicular speeds on non-paved roads and access ways would be limited to 25 mph;
- Regular inspections would be suspended during periods of high winds; and
- Water trucks would be used, as necessary, during specific meteorological events.

Air pollutant emissions from the emergency diesel generators (if used) and fire water pump engines would be subject to emission limits under National Source Performance Standards (NSPS) Subpart IIII. The Applicant would adopt an operating limitation of no more than 50 hours per year, per engine for routine testing and maintenance of these components. These engines would be compliant with current EPA tier emission performance criteria.

Table 4-3
Summary of PV Construction Emissions

Year 1 Construction Emissions

Construction Emission Category	NO_x (tons)	CO (tons)	SO_2 (tons)	VOC (tons)	PM_{10} (tons)	$PM_{2.5}$ (tons)	CO_2 (tons)	N_2O (tons)	CH_4 (tons)	CO2e (metric tons)	TOTAL HAP (tons)
Construction Equipment Exhaust	2.39	1.26	0.003	0.28	0.22	0.21	-	-	-	-	-
On-Road Vehicle Exhaust - Heavy Duty Vehicles	0.70	0.17	0.001	0.04	0.02	0.02	154.28	0.000	0.003	140.08	0.01
On-Road Vehicle Exhaust - Commute Vehicles	1.28	6.98	0.016	0.17	0.02	0.02	808.91	0.005	0.012	735.33	0.05
Fugitive Dust from Travel on Paved Roads	-	-	-	-	2.71	0.66	-	-	-	-	-
Fugitive Dust from Travel on Unpaved Roads	-	-	-	-	0.57	0.06	-	-	-	-	-
Fugitive Dust from Construction Activities	-	-	-	-	4.46	0.93	-	-	-	-	-
Total	**4.37**	**8.410**	**0.021**	**0.49**	**8.00**	**1.90**	**963.20**	**0.005**	**0.015**	**875.41**	**0.06**
Emission Rate Thresholds[1]	**40.0**	**100.0**	**40.0**	**40.0**	**15.0**	**10.0**	**NA**	**NA**	**NA**	**75,000**	**NA**

[1] Clark County Air Quality Regulations Section 12.2.2.uu.1. NA = no county or federal emission rate threshold has been established.

Year 2 Construction Emissions

Construction Emission Category	NO_x (tons)	CO (tons)	SO_2 (tons)	VOC (tons)	PM_{10} (tons)	$PM_{2.5}$ (tons)	CO_2 (tons)	N_2O (tons)	CH_4 (tons)	CO2e (metric tons)	TOTAL HAP (tons)
Construction Equipment Exhaust	8.41	4.37	0.012	1.02	0.73	0.71	-	-	-	-	-
On-Road Vehicle Exhaust - Heavy Duty Vehicles	2.38	0.61	0.006	0.13	0.08	0.07	630.18	0.001	0.014	572.17	0.03
On-Road Vehicle Exhaust - Commute Vehicles	4.52	30.65	0.065	0.59	0.06	0.05	3235.82	0.016	0.050	2940.83	0.17
Fugitive Dust from Travel on Paved Roads	-	-	-	-	10.74	2.64	-	-	-	-	-
Fugitive Dust from Travel on Unpaved Roads	-	-	-	-	2.27	0.23	-	-	-	-	-
Fugitive Dust from Construction Activities	-	-	-	-	0.03	0.01	-	-	-	-	-
Total	**15.31**	**35.63**	**0.082**	**1.74**	**13.91**	**3.70**	**3866.00**	**0.016**	**0.064**	**3513.00**	**0.19**
Emission Rate Thresholds[1]	**40.0**	**100.0**	**40.0**	**40.0**	**15.0**	**10.0**	**NA**	**NA**	**NA**	**75,000**	**NA**

[1] Clark County Air Quality Regulations Section 12.2.2.uu.1. NA = no county or federal emission rate threshold has been established.

*Year 1 emissions were calculated for 3 months of construction and Year 2 includes 12 months of construction in order to show maximum annual emissions. Regardless of year of occurrence, monthly emissions would be consistent

Table 4-4
Summary of PV Operation Emissions

Operation Emission Category	NO_x (tons)	CO (tons)	SO_2 (tons)	VOC (tons)	PM_{10} (tons)	$PM_{2.5}$ (tons)	CO_2 (tons)	N_2O (tons)	CH_4 (tons)	SF_6 (tons)	CO2e (metric tons)	TOTAL HAP (tons)
Paved Roads	-	-	-	-	0.496	0.122	-	-	-	-	-	-
Unpaved Roads	-	-	-	-	1.479	0.148	-	-	-	-	-	-
On-Road Vehicle Exhaust - Heavy Duty Vehicles	0.006	0.041	0.000	0.001	0.000	0.000	4.314	0.000	0.000	-	3.921	0.0002
On-Road Vehicle Exhaust - Commute Vehicles	0.301	2.043	0.004	0.040	0.004	0.004	215.721	0.001	0.003	-	196.056	0.0112
Circuit Breaker SF6 Emissions	-	-	-	-	-	-	-	-	-	0.005	97.567	-
Diesel Fire-Pump Emissions	0.221	0.048	0.015	0.018	0.016	0.016	7.396	0.019	0.006	-	7.421	0.0005
Diesel Generator Emissions	0.639	0.138	0.042	0.051	0.045	0.045	21.448	0.054	0.018	-	21.521	0.0014
Total	**1.167**	**2.270**	**0.061**	**0.109**	**2.040**	**0.334**	**248.880**	**0.074**	**0.028**	**0.005**	**326.485**	**0.0134**
Emission Rate Thresholds[1]	**40.0**	**100.0**	**40.0**	**40.0**	**15.0**	**10.0**	**NA**	**NA**	**NA**	**75,000**	**NA**	**NA**

[1] Clark County Air Quality Regulations Section 12.2.2.uu.1. NA = no county or federal emission rate threshold has been established.

Table 4-5
Summary of Decommission Emissions

Decommission Emission Category	NO_x (tons)	CO (tons)	SO_2 (tons)	VOC (tons)	PM_{10} (tons)	$PM_{2.5}$ (tons)	CO_2 (tons)	N_2O (tons)	CH_4 (tons)	CO2e (metric tons)	TOTAL HAP (tons)
Construction Equipment Exhaust	0.706	0.367	0.001	0.085	0.061	0.059	-	-	-	-	-
On-Road Vehicle Exhaust - Heavy Duty Vehicles	0.019	0.005	0.0000	0.001	0.001	0.001	4.926	0.00001	0.0001	4.473	0.000
On-Road Vehicle Exhaust - Commute Vehicles	0.063	0.429	0.001	0.008	0.001	0.001	45.285	0.0002	0.0007	41.157	0.002
Fugitive Dust from Travel on Paved Roads	-	-	-	-	0.133	0.033	-	-	-	-	-
Fugitive Dust from Travel on Unpaved Roads	-	-	-	-	0.190	0.019	-	-	-	-	-
Total	**0.788**	**0.800**	**0.002**	**0.095**	**0.387**	**0.112**	**50.211**	**0.0002**	**0.001**	**45.629**	**0.003**
Emission Rate Thresholds[1]	**40.0**	**100.0**	**40.0**	**40.0**	**15.0**	**10.0**	**NA**	**NA**	**NA**	**75,000**	**NA**

[1] Clark County Air Quality Regulations Section 12.2.2.uu.1. NA = no county or federal emission rate threshold has been established.

The estimated yearly emissions totals of O_3 precursors (NO_x and VOCs) would be less than the de minimis thresholds as specified under the Federal General Conformity Rule (40 CFR 93); Thus, Proposed Project related emissions during the operational phase are assumed to be minor and conform to the SIP and the regional air quality plans. GHG emissions during the operational phase would be well below the Clark County and federal air permitting threshold (75,000 tons per year) as well as the draft federal threshold of 25,000 metric tons per year of CO2-e emissions (CEQ 2014).

Decommissioning. The types of emissions generated during decommissioning of the Proposed Project would be similar to but lower than those generated during Project construction. This is because the same types of equipment and activities would be used to remove Project facilities but over a shorter period of time. The activities would be similar for construction and decommissioning, and both would be in compliance. The air quality impacts associated with Project decommissioning would be temporary.

To ensure that decommissioning the facility would not have an adverse effect, the Facility Decommissioning Plan would be approved by the BIA and Tribe prior to commencement of site closure activities and to the BLM for facilities on lands managed by them. The Plan would address conformance to applicable regulatory requirements including air quality. Potential closure activities could include re-grading and restoration of original site contours and revegetation of areas disturbed by closure activities in accordance with the Site Decommissioning and Reclamation Plan. Unless best management practices have changed by the time of decommissioning, the Applicant would follow the same practices (e.g., limited work during periods of high winds, etc.) as described in the construction methods.

The Proposed Project would not violate any air quality standard or contribute substantially to an existing or proposed projected air quality violation. In addition, GHG emissions during the decommissioning phase would be well below the Clark County and federal air permitting threshold (75,000 tons per year) as well as the draft federal threshold of 25,000 metric tons per year of CO2-e emissions (CEQ 2014).

4.6.2.2 Gen-Tie Alternative

Effects to air quality resulting from implementation of this alternative would be similar to those identified for the Proposed Project. The same solar site would be prepared and developed and the same BMPs would be employed as mitigation as for the Proposed Project. This gen-tie alternative would be located on the same soil types and would utilize the same construction methods and mitigation as the proposed gen-tie. While this route alternative would be slightly shorter, the portion of the route on the Reservation does not parallel an existing ROW for as much of its distance as the proposed gen-tie, so more road construction along the route on the Reservation would be necessary. As a result, soil disturbance and associated fugitive dust impacts on the Reservation would be approximately the same as the proposed gen-tie. The portion of the line on BLM-administered lands and private lands would be the same as the proposed gen-tie.

4.6.2.3 Water Supply Alternative

Air emissions from construction and decommissioning this Alternative would be the same as those described for the Proposed Project.

4.6.2.4 No Action Alternative

Under the No Action Alternative, the Proposed Project would not be built and there would be no direct or indirect effects on air quality.

4.6.3 Residual Effects

All air quality impacts were assessed as if all Applicant-proposed mitigation measures, BMPs, and other design features of the alternatives have been applied. Therefore, the residual effects are represented by the Proposed Project impacts discussed above.

4.7 Noise

This section discusses the effects on the ambient noise and vibration levels that may occur with implementation of the Proposed Project or alternatives. The indicators used to identify and analyze effects are presented and potential effects and agency-recommended mitigation measures are discussed.

4.7.1 Indicators

The primary indicator of noise levels for this analysis is the A-weighted average noise level measured in decibels (Leq). The one-hour average noise level (dBA Leq [1-hour]) is often used to characterize ongoing operations or long-term effects. The maximum dBA level (dBA Lmax) is used to document the highest intensity, short-term noise level. Another commonly used measure of noise effects is Ldn. The Ldn value is a 24-hour A- weighted sound level average calculated from midnight to midnight, where sound levels during the nighttime hours of 10:00 p.m. to 7:00 a.m. have an added 10 dB weighting.

The BIA and the BLM do not have regulations quantitatively limiting noise generation or effects from the Proposed Project during the temporary construction phases or operational phase. The EPA has developed and published a criterion to be used as an acceptable guideline when no other local, tribal, county, or state standard has been established (USEPA 1974).

The Proposed Project would affect ambient noise and vibration levels if it would:

- Result in the generation of noise levels or exposure of persons and sensitive species to noise levels or ground-borne vibration and noise levels in excess of standards established in applicable Federal, state, and local general plans or noise ordinances at nearby noise-sensitive areas

4.7.2 Direct and Indirect Effects by Alternatives

To compare effects, this analysis defines the temporal scale (time), spatial extent (area), and intensity of effects for each alternative. All effects discussed in this section are direct. No indirect effects were identified for this resource.

4.7.2.1 Proposed Project

Noise effects could result from the implementation of the Proposed Project during construction, O&M, and decommissioning activities. These impacts could be short-term (construction) and long-term (operations and maintenance).

Short-Term. The construction phase of the Proposed Project is expected to last up to 12 to 15 months. During peak construction activity, the Proposed Project would require approximately 300 workers. To evaluate potential noise impacts due to Proposed Project construction, reference noise levels were obtained from the Construction Noise Handbook (Federal Highway Administration [FHWA], 2006) which provides a comprehensive assessment of noise levels from construction equipment. Based on the reference values in the guide and the list of construction equipment to be used on the Proposed Project, presented in **Table 4-6**, the loudest equipment used to construct the Proposed Project would generally emit noise in the range of 80 to 85 dBA at 50 feet, with utilization factors of 16 to 50 percent that account for the time period the equipment would be used during a 10-hour work day. Noise at any specific receptor is typically dominated by the closest and loudest equipment. The type of construction equipment and the number of equipment pieces near any specific receptor location would vary over time.

For the purpose of this analysis, construction noise impacts are evaluated in the “worst- case” conditions as described by the Proposed Project grading scenario and the electrical gen-tie installation scenario. The specified equipment and their respective utilization factors were evaluated for each scenario. The noise impact assessment assumed that construction equipment would operate between the hours of 7:00 a.m. and 5:00 p.m., Monday through Saturday.

Table 4-6 Typical Construction Equipment Noise Levels		
Equipment	**Typical Utilization Factor (%)**	**Noise Level (dBA) at 50feet**
Backhoe	40	80
Concrete mixer truck	40	85
Concrete pump truck	20	82
Crane	16	85
Drill rig	20	85
Dozer	40	85
Excavator	40	85
Generator	50	82
Grader	40	85
Loader	40	80
Paver	50	85
Roller	20	85
Heavy truck	40	84
Tractor	40	84

Source: FHWA, 2006

As shown above in **Table 4-5**, the maximum intermittent construction equipment noise levels are expected to range between 80 and 85 dBA at approximately 50 feet. Based on construction noise modeling, the highest predicted and combined operational noise level for construction equipment associated with the Proposed Project would be 86.3 dBA at 50 feet from the grading operations and 84.4 dBA during the installation of the gen-tie lines. Given the two temporary worst-case construction scenarios defined above, the construction equipment noise levels at various distances are presented in **Table 4-7**.

Although actual, combined noise levels from construction activities would depend on the duration of each task and the exact number and utilization factor of each piece of equipment and vehicle, it is estimated that construction activities would produce a short- term, adverse increase over the existing ambient noise levels at the site boundary of the Proposed Project (50 feet from the source).

Table 4-7 Construction Equipment Noise Levels versus Distance		
Distance from Property Line	**Grading Noise Impact Level (Leq dBA)**	**Transmission Noise Impact Level (Leq dBA)**
50	86.3	84.4
100	83.0	79.2
200	78.2	72.8
400	74.3	68.2
800	68.7	61.9
1,600	62.2	55.1
3,200	54.6	47.4
6,400	45.2	37.9

Source: K Road EIS 2012

The use of percussive or vibratory equipment during the installation of the PV solar components may produce short-term, ground-borne vibration (VdB) above 75 VdB and ground-borne noise within the vicinity of the Proposed Project. These noise and vibration levels would be well below existing ambient noise levels by the time they reached the closest residence which is approximately 0.5 miles southwest from the site and at an elevation about 100 to 150 lower than the site making them inaudible at the closest sensitive receptor. Therefore, no noise impacts would occur to the nearest sensitive human receptor and generated noise would not exceed the EPA noise threshold limit of 55 dBA Ldn (48 dBA Leq). Likewise, there are no sensitive human receptors that would be adversely impacted by the construction of the transmission line. The temporary water pipeline while adjacent to Reservation Road would be placed above-ground so there would be no significant construction associated with its initial placement or removal. Therefore, no mitigation is required to reduce construction related noise and vibration impacts.

Construction noise could be perceptible to recreational users along the Off-Highway Vehicle (OHV) routes in the area but would be short-term and unlikely to impair the recreational experience. The Proposed Project is not near any designated ACECs or other sensitive land use areas. Construction noise from the Proposed Project is not anticipated to affect users of the Old Spanish National Historic Trail because the Trail is located more than two miles away and a railroad are located between the Project and the trail.

Short term noise impacts could affect wildlife species such as birds and small mammals adjacent to the facility. Most wildlife species would return to the area after construction if habitat and foraging opportunity exists.

Long Term. During the operational phase, the Proposed Project is expected to employ up to five (5) permanent full-time workers to operate and maintain the facility and to provide plant security. Maintenance needs for the PV project would include panel washing, array inspection, vegetation control (as needed), and inverter and switchyard maintenance. The equipment would also include the use of all-terrain vehicles to travel inside the solar site for physical inspection and parts replacement.

The potential sources of long-term operational noise would stem from the operation of electrical equipment including the transformers for the solar arrays, corona noise from the 230 kV gen-tie line, the site substation, and noise from vehicle operations during routine O&M.

Noise from electrical equipment, such as transformers, is low frequency and volume. If trackers are used, the sound from the tracker motors would be less than 70 decibels at a distance of 3 feet. This would equate to less than 30 decibels at 50 feet (similar to noise levels in a library). The tracker motors and transformer locations are spread widely over the site, which would additionally reduce the composite noise level at a receptor. The nearest sensitive noise receptor is approximately 0.5 miles so the combined noise level of the transformers and tracker motors would be inaudible and not exceed the EPA noise thresholds.

Other maintenance activities, such as visual inspections and equipment parts replacement would be expected to be ongoing over the life of the Proposed Project. Potential effects from these activities on the existing ambient noise levels may be detectable for a short duration at the site and on local roads (minor increase in traffic). Given the relative location of the site with respect to sensitive receptors, any potential increases in noise levels on-site are unlikely to be detectable or of concern to the general public. Therefore, there would be no long-term effects on existing ambient noise and vibration levels at the nearest residential sensitive receptor from O&M of the Proposed Project. No additional mitigation has been identified.

When a transmission line is in operation, an electric field is generated in the air surrounding the conductors forming a “corona.” The corona is an event that results from the partial breakdown of the electrical insulating properties of the air surrounding the conductors. When the intensity of the electric field at the surface of the conductor exceeds the insulating strength of the surrounding air, a corona discharge occurs at the conductor surface, representing a small dissipation of heat and energy. Some of the energy may dissipate in the form of small local pressure changes that result in audible noise or in radio or television interference. Audible noise generated by corona discharge is characterized as a hissing or crackling sound that may be accompanied by a hum.

Slight irregularities or water droplets on the conductor and/or insulator surface accentuate the electric field strength near the conductor surface, thereby making corona discharge and the associated audible noise more likely. Therefore, audible noise from transmission lines is generally a foul-weather (wet conductor) phenomenon. However, during fair weather, insects and dust on the conductors can also serve as sources of corona discharge.

The Electric Power Research Institute (EPRI) has conducted several studies of corona effects (EPRI 1978 and 1987). Typical noise levels of transmission lines with wet conductors are shown in **Table 4-8**.

Table 4-8
Transmission Line Voltage and Audible Noise Level

Line Voltage (kV)	Audible Noise Level Directly Below the Conductor(dBA)
138	33.5
240	40.4
356	51.0

Source: EPRI, 1978 and 1987
kV=kilo Volt; dBA=A-weighted decibels

As the Proposed Project gen-tie lines for the Project would be 230 kV, operation of the line could generate 40 dBA. This level of noise would only occur during infrequent wet conditions and would generally be indistinguishable from background ambient noise even during the nighttime hours. Therefore, operation of the Proposed Project gen-tie lines would have a negligible effect on existing ambient noise level at the nearest residential sensitive receptor. No mitigation is required.

Maintenance activities associated with the transmission lines and access road would result in noise levels below those associated with construction-related activities would occur less frequently, and would be of shorter duration than construction activities. Maintenance activities would be conducted on an as-needed basis and due to their short duration and the distance to the nearest sensitive receptors, there would be no long-term adverse effect on the existing ambient noise conditions. Therefore, no mitigation is required.

Decommissioning. The expected life of the Proposed Project is 30 years. In the event that the site would no longer be used for power generation, it would be decommissioned and reclaimed. All equipment, buildings, concrete foundations, and driven piles would be removed from the site, generating a temporary and localized increase in ambient noise levels during decommissioning. The Applicant would develop a Facility Decommissioning Plan consistent with BIA and Tribal requirements in a manner that protects public health and safety and is environmentally acceptable. Adverse effects during decommissioning would be negligible, localized, and short-term. No mitigation would be required due to the distance to the nearest sensitive receptor.

4.7.2.2 Gen-Tie Alternative

Noise effects resulting from implementation of this alternative would be similar to those identified for the Proposed Project. The same solar site would be graded and developed and the same BMPs would be employed as mitigation as for the Proposed Project. While this route

alternative would be slightly shorter, it would utilize the same construction methods and mitigation as the proposed gen-tie. As a result, noise impacts would be approximately the same as the proposed gen-tie.

4.7.2.3 Water Supply Alternative

The construction, operation, and decommissioning impacts associated with solar field and the ROW components of this Alternative would be the same as the Proposed Action. This is because it would be located within the same site footprint and would utilize the same ROWs. Also, similar construction and operational equipment would be used and the same mitigation would be employed.

4.7.2.4 No Action Alternative

Under the No Action Alternative, the Project would not be constructed, so there would be no noise effects.

4.7.3 Residual Effects

There would be no residual noise effects from construction, O&M, and decommissioning of the alternatives.

4.8 Biological Resources

This section discusses vegetation, wildlife, and sensitive wildlife species. Effects on biological resources that could result from the implementation of the Proposed Project and Alternatives during construction, O&M, or decommissioning activities are analyzed in this section.

Analysis of impacts to biological resources was conducted by: (1) using information from numerous sources and historical reports in addition to data provided by the Applicant and the Tribe; and (2) evaluating temporal and spatial impacts to habitats and organisms potentially present within the Proposed Project site and within a regional geographic context.

Field surveys were conducted for vegetation communities, Gila monsters (*Heloderma suspectum)*, desert tortoises (*Gopherus agassizii)*, burrowing owls (*Athene cunicularia)*, and golden eagles in 2014 and 2015. The results of these studies have been used in this analysis to assess potential vegetation impacts including impacts to special status plant species within the Proposed Project. The desert tortoise survey results were used to prepare a Biological Assessment under Section 7 of the ESA for the consultation between the BIA, BLM and USFWS.

4.8.1 Indicators

The Proposed Project would affect biological resources if it would:

- Substantially alter the structure, function, and persistence of sensitive upland, riparian, or aquatic vegetative communities;
- Change the diversity or substantially alter the numbers of a local population of any wildlife or plant species, or interfere with the survival, growth, or reproduction of affected wildlife and plant populations;
- Substantially interfere with the seasonal or daily movement, migration corridors, or range of migratory birds and other wildlife;
- Result in a substantial long-term habitat loss, degradation, fragmentation, or substantial increase in the ”edge effect” of key habitat of special status species including federally-listed species;
- Result in direct or indirect impacts on candidate or special status species populations or habitat that would contribute to or result in the federal or state listing of the species (e.g., substantially reducing species numbers, or resulting in the long-term loss of habitat essential for the continued existence of a species);
- Introduce and/or increase the potential for introduction of invasive, non-native plants or noxious weeds to an area or potential increase in existing populations of these plants;
- Introduce physical structures or involve production, use, or disposal of materials that pose a health hazard to special status species;
- Result in changes in the environment that increase opportunities for predators of special status species; or
- Result in water use, water developments, or water controls that impact native vegetation, special status plant species, or habitat of special status plant species.

4.8.2 Vegetation

There are four vegetative cover types present within the project area: Creosotebush-White bursage, Mojave xeroriparian, tamarisk/mesquite, and disturbed. See Chapter 3- Biological Resources for a description of vegetative cover types in Project Area. Direct and indirect effects, mitigation, and residual effects to vegetation resources are discussed below. **Table 4-9** presents the long-term and temporary impact acreage associated with the various project area components.

4.8.2.1 Vegetation Communities

4.8.2.1.1 Direct and Indirect Effects by Proposed Action and Alternatives

4.8.2.1.1.1 Proposed Project

A vegetation community survey of the Proposed Project was conducted that documented the presence/absence of special status plant species or their habitats within the Proposed Project site. The results of this survey have been used in this analysis to assess the potential vegetation impacts including impacts to special status plant species within the Proposed Project site.

Clearing, grading and "disk and roll of the solar site would cause the direct loss of approximately 672 acres of vegetation, the majority of which is the creosotebush-white bursage scrub vegetation community. Disking and rolling would occur in those areas necessary to facilitate construction of the solar field. Grading would be required for interior roads and accessways, the on-site substation, O&M facilities and access roads. After construction, vegetation within the solar site would be managed and trimmed where needed to maintain movement of any tracking system, to facilitate maintenance, and reduce fire risk. Herbicides would be used where needed with the use of specific chemicals only occurring after approval from the Tribe, BLM, USFWS, and/or BIA, as appropriate. The site would be disturbed for the life of the project but would be rehabilitated after decommissioning. Therefore, disturbance would be considered long-term but not permanent. Development of the gen-tie lines and water pipeline associated with the Proposed Project would result in short term impacts to the local vegetation as the result of construction. After the construction phase, the temporarily disturbed areas not covered by facilities would be reclaimed.

Reduction of native plant species would leave bare areas at risk for the potential spread of non-native, invasive weed species and increase the potential for increased erosion. Construction activities would disturb soil within the Proposed Project, further creating opportunities for non-native, invasive weed species to colonize the disturbed work areas. Weed sources would include incoming vehicles, incoming fill, construction BMPs such as hay bales and adjacent lands via natural movement such as wind. Invasive weed species could out-compete native plants for resources such as water and space. The Applicant would implement an approved Weed Management Plan (WMP) to prevent introduction of weed species and control the growth of weeds and other undesired vegetation.

Indirectly, soil disturbance could reduce the native seed bank and dust generated during construction could potentially affect off-site native vegetation communities by reducing photosynthetic activity. Catchment of storm water runoff and subsequent storage in retention ponds could reduce localized water availability in downstream washes and could affect downstream vegetation. The treatment of noxious/invasive weeds (i.e., herbicide treatments, plant removal) could result in inadvertent injury of native plant species that are in close proximity.

The proposed ROWs associated with the Project include creosotebush-white bursage scrub, and xeroriparian vegetative covertypes. Water for the Project would be delivered to the solar site via an approximately 2.0 mile above-ground water pipeline located on the Reservation. Construction activities for the pipeline would include ground-disturbing activities that would result in the temporary disturbance of approximately 5 acres of disturbed habitat in the pipeline ROW. The pipeline would be removed when construction is completed, and would not result in long-term impacts.

Water drawdowns at the siphon location would affect instream flows in the Muddy River, which could in turn affect hydrophytic or phreatophytic vegetation downstream. The potential flow reduction is not expected to be significant for the 500 AF used during construction. The siphon would be removed after construction, making this potential impact only temporary in nature. Therefore, impacts to downstream vegetation resulting from water withdrawals are not expected to occur.

Water withdrawal from the river could include weed seeds that could be potentially distributed throughout the solar site. Filters on the water withdrawal system should minimize this risk.

The proposed very short access road would be constructed largely within the ROW of Highway 168 and would result in the long-term loss of approximately 1 acre of mostly disturbed vegetation within the ROW. Frequent vehicular use by personnel associated with the O&M of the solar site could result in the import of noxious/invasive weeds along the access road and solar site but would be mitigated by implementation of the Weed Management Plan. A draft of the Weed Management Plan is included in **Appendix C**.

Development of the gen-tie lines would result in temporary disturbance associated with construction at each structure location and pull sites used to string the conductor into place. Long-term gen-tie impacts would be associated with the access needed for each structure location, if not already existing, and a 2,000 ft^2 area around each structure. The 230kV gen-tie would result in the temporary loss of approximately 25 acres of vegetation and long-term loss of 5 acres of vegetation in the gen-tie line ROW.

Table 4-9
Impacts to Vegetation Types by Proposed Project (acres)

	Solar Site		Gen-Tie Route		Water Pipeline		Project Totals	
Vegetation Community Type	**Long-Term Impact**	**Temp. Impact**	**Long-Term Impact**	**Temp. Impact**	**Long-Term Impact**	**Temp. Impact**	**Long-Term Impact**	**Temp. Impact**
Creosotebush/White-Bursage	555	50	14	15	0	0	579	65
Disturbed	9	0	1	9	0	5	10	14
Mojave Xeroriparian	11	0	0	1	0	0	11	1
Tamarisk/Mesquite	0	0	0	0	0	0	0	0
Total Impacts	**575**	**50**	**15**	**25**	**0**	**5**	**591***	**81***

Gen-Tie Route values include pole structures, construction area, gen-tie road and pull sites.

- *Total includes an additional acre of disturbance associated with the site access roads.*

Proposed Project facilities have an expected life of 30 years or more. The Applicant has developed a draft Project Restoration Plan defining the procedures for the revegetation and rehabilitation of areas temporarily disturbed by the Proposed Project (**Appendix E**). This plan would be implemented immediately after construction for the areas that are temporarily disturbed, such as portions of the gen-tie line routes, water pipeline, and access road. A Decommissioning and Site Reclamation Plan would be prepared and approved by the Tribe, BIA and BLM prior to decommissioning.

To minimize the potential impacts on vegetation, the following mitigation measures would be implemented:

- Pre-construction surveys for protected and sensitive species;
- Best management practices;
- Biological monitors during construction;
- Worker Environmental Awareness Program;
- Weed Management Plan;
- Site Restoration Plan;
- Site Reclamation Plan, and
- Vehicles and equipment would be cleaned of soil and plant material prior to entering the site.

Chapter 5 Mitigation Measures - Biological Resources, provides additional details on the proposed mitigation measures.

4.8.2.1.1.2 Gen-Tie Alternative

Effects to vegetation resulting from implementation of this alternative would be similar to those identified for the Proposed Project. The same solar site disturbance would occur and the same BMPs would be employed as mitigation as for the Proposed Project. The alternative gen-tie route would be located on the same vegetation types and would utilize the same construction methods and mitigation as the proposed gen-tie. While this route alternative would be slightly shorter, the portion of the route on the Reservation does not parallel an existing ROW for as much of its distance as the proposed gen-tie, so more road construction along the route on the Reservation would be necessary. As a result, vegetation disturbance on the Reservation would be approximately the same as the proposed gen-tie. The portion of the line on BLM-administered lands and private lands would be the same as the proposed gen-tie.

4.8.2.1.1.3 Alternative Water Supply

Effects to vegetation resulting from construction and decommissioning of the Alternative Water Supply would be the same as those identified for the Proposed Project. The same site and ROWs would be disturbed and developed and the same BMPs would be employed as mitigation as for the Proposed Project.

This alternative would require that the up to 500 AF of water needed during the construction phase of the project be provided from groundwater. As discussed in the groundwater analysis for the this Alternative, the relatively small amount and short duration of the proposed groundwater withdrawal associated with this alternative is not expected to have significant impacts to local stream flows, so potential impacts to vegetation associated with nearby surface waters and vegetation downstream from the Muddy River Springs area is unlikely. Additionally, the Applicant would prepare a Groundwater Monitoring and Reporting Plan to guide implementation of the Project if groundwater is used.

4.8.2.1.1.4 No Action Alternative

Under the No Action Alternative, the Project would not be constructed so there would be no effects to vegetation resources.

4.8.2.1.2 Residual Effects – Vegetation

The Proposed Project would result in the long-term loss of approximately 591 acres of vegetative cover types for the operational life of the Project (See **Table 4-9** for a complete list of cover types)**.** The increase in vehicular traffic during the construction of the Proposed Project could negatively impact vegetation through increased atmospheric dust. Subsequent to implementation of the mitigation measures, it is possible that noxious/invasive weeds could be introduced in the area after construction and during operations phases, but implementation of the Weed Management Plan would help prevent the spread of noxious/invasive weeds.

Following decommissioning when all facilities would be removed, disturbed areas would be revegetated in accordance with the Decommissioning and Site Reclamation Plan. This would reduce the long-term effects to vegetation.

4.8.2.2 Special Status Plant Species

4.8.2.2.1 Direct and Indirect Effects by Proposed Action and Alternatives

4.8.2.2.1.1 Proposed Project

Surveys for the federally-listed and candidate, threatened or endangered plant species habitats (Las Vegas Buckwheat [*Eriogonum corymbosum* var. *nilesii])* that are known to occur within

Clark County, NV were conducted for the Project. No federally protected vegetation or suitable habitats were found at the Proposed Project site. Additionally, the Applicant surveyed for vegetation communities and noted suitable habitats for state protected, regulated, listed and BLM special status vegetation. Special status species that were surveyed for and did not occur on the Proposed Project site include: Blue Diamond Cholla (*Cylindropuntia multigeniculata*), Three Corner Milkvetch (*Astragalus geyeri* var. *triquetrus),* Beaverdam Breadroot *(Pediomelum castoreum),* Nye Milkvetch (*Astragalus nyensis)*, Rosy twotone Beardtongue (*Penstemon bicolor* spp. *roseus)* and White Bearpoppy (*Arctomecon merriamii)*.

The Applicant also surveyed for cacti, which are protected under Nevada state law (NRS 527 – Protection and Preservation of Timbered Lands, Trees and Flora). Cacti were found throughout the upland portions of the Proposed Project site. **Table 3-8** in Chapter 3 lists the protected species of cacti that occur on the Proposed Project site.

A draft Project Restoration Plan has been developed defining the procedures for the revegetation and rehabilitation of areas temporarily disturbed by the Proposed Project (**Appendix E**). This plan would be implemented immediately after construction for the areas that are temporarily disturbed, such as portions of the gen-tie line routes, water pipeline, and access road.

Additional surveys for these plants would be conducted prior to any construction of the Proposed Project. Impacts to documented plants would be avoided if practical or reduced through use of construction BMPs and habitat restoration. If impacts cannot be avoided then impacts would be mitigated through seed collections from affected populations and a potential sponsorship of each affected species via the Center for Plant Conservation imperiled plant collection.

4.8.2.2.1.2 Gen-Tie Alternative

Effects to special status plant species resulting from implementation of this alternative would be similar to those identified for the Proposed Project. The same solar site disturbance would occur and the same BMPs would be employed as mitigation as for the Proposed Project. The alternative gen-tie route would be located on the same vegetation types and would utilize the same construction methods and mitigation as the proposed gen-tie. While this route alternative would be slightly shorter, the portion of the route on the Reservation does not parallel an existing ROW for as much of its distance as the proposed gen-tie, so more road construction along the route on the Reservation would be necessary. As a result, vegetation disturbance and the potential impacts to special status species on the Reservation would be approximately the same as the proposed gen-tie. The portion of the line on BLM-administered lands and private lands would be the same as the proposed gen-tie.

4.8.2.2.1.3 Alternative Water Supply

Effects to special status plant species resulting from implementation of the Alternative Water Supply would be the same as those identified for the Proposed Project. The same site and ROWs would be disturbed and developed and the same BMPs would be employed as mitigation as for the Proposed Project.

The groundwater pumping required to deliver the up to 500 AF of water for the construction phase of the project is not expected to have significant impacts to local stream flows. Therefore, potential impacts to any sensitive plant species occurring in these habitats from the proposed groundwater withdrawal are unlikely.

4.8.2.2.1.4 No Action Alternative

Under the No Action Alternative, the Project would not be constructed so there would be no effects to special status plant species.

4.8.3 Wildlife

4.8.3.1 Direct and Indirect Effects by Proposed Action and Alternatives – Wildlife

Biological surveys for native wildlife (e.g. burrowing owls, desert tortoises, Gila monsters, golden eagles) were conducted for the Proposed Project during 2014 and 2015. The following analysis is based on the results of those surveys as well as publicly available data and reports.

4.8.3.1.1 Proposed Action

Ground-disturbing activities associated with construction of the solar site are potential sources of direct mortality and injury to wildlife. Impacts from equipment and vehicles can occur for slow-moving species, species that have subsurface burrows, or ground-nesting birds. Some nesting birds, large mammals (including kit fox), and reptiles are susceptible to visual and noise disturbances caused by the presence of humans and construction equipment and the generation of dust. Such disturbances could cause wildlife to alter foraging and breeding behavior and avoid suitable habitat (e.g., nesting birds may abandon nests due to these disturbances). Loss of burrows due to Proposed Project construction, ground vibration, or avoidance behavior would cause wildlife to search for and/or dig new burrows.

Wildlife occurring in and around the project area would also be indirectly impacted. The removal and/or modification of natural vegetation communities would reduce forage, shelter, and nesting opportunities to wildlife including multiple special status wildlife species (see special status species **Section 4.8.4** below). The long-term loss and/or degradation of approximately 591

acres of wildlife habitat would cause wildlife to rely more heavily on habitat in surrounding areas. Construction activities and O&M activities would have the potential to impact wildlife in surrounding areas. Construction and operation of the Proposed Project could directly and adversely impact wildlife by causing wildlife to alter foraging, including being attracted to trash, and breeding behavior. For example, increased noise as a result of construction could result in wildlife temporarily avoiding the general area surrounding the Proposed Project and if trash is left out, species such as kit fox could be attracted to the area. Mitigation measures outlined below and in Chapter 5 describe how these potential impacts would be minimized.

Additionally, removal of resources and exclusion of wildlife from the fenced portions of the Proposed Project would add pressure on the food resources in adjacent areas. Ground-disturbing activities and mowing could increase the spread of noxious/invasive weeds, which could potentially out-compete existing annual vegetation that would indirectly and adversely affect the quality of wildlife habitat and forage. Also, water withdrawal from the river could include weed seeds that could be potentially distributed throughout the solar site. Filters on the water withdrawal system should minimize this risk. Implementation of the Weed Management Plan would greatly reduce or eliminate these impacts from weed species.

The Project infrastructure may also indirectly cause mortality to wildlife by increasing the risk of predation on certain species by native predators such as ravens and raptor species. Increased predation would be minimized by the implementation of perch deterrents around the Proposed Project area as well as weed/vegetation control to reduce foraging habitat. The addition of electric transmission poles/towers could provide additional perching resources to ravens and raptor species, which could result in increased foraging activity of these species within and near the Proposed Project site. Construction, operation and maintenance of the Proposed Project could result in trash and debris that may attract predators such as ravens and coyotes. A draft Raven Control Plan has been prepared that addresses minimization and avoidance measures that would be taken to reduce the attraction of the Proposed Action to common ravens, thereby minimizing impacts to species that ravens prey upon. **Appendix J** contains the draft Raven Control Plan.

During construction, hazardous waste (solid and liquid) could be generated at the site as identified in Table 2-3B in Chapter 2. Exposure to hazardous waste could be a direct source of wildlife mortality and/or injury through the poisoning of individuals. Spills of hazardous material could also indirectly adversely impact wildlife if the spill of the hazardous material results in the loss of natural vegetation community. O&M activities could also result in production of similar hazardous waste as the construction phase, and would result in the same type of impacts. The hazardous waste produced by Project site is subject to strict regulation by the Hazardous Materials and Waste Management Plan prepared for the Project. The subsequent containment and disposal of hazardous waste outlined in Spill Prevention and Emergency Response Plan would reduce the likelihood that significant spills would adversely affect wildlife.

Although resident bird diversity in the Proposed Project site is low, a number of migratory bird species could nest there. A number of minimization measures would be implemented to reduce impacts to birds including surveying for, delineating, and adhering to non-disturbance buffers for nesting birds during the breeding season.

Construction activities for the water pipeline would result in the temporary loss of approximately 5 acres of disturbed habitat adjacent to an existing Reservation Road ROW and the subsequent loss of low quality wildlife habitat. Construction of the access roads would result in the long-term loss of approximately 1 acre of wildlife habitat. The construction of the 230 kV gen-tie would result in the temporary loss of 16 acres and the long-term loss of 14 acres of wildlife habitat, as well as the temporary loss of 9 acres and the long-term loss of 1 acre of previously disturbed habitat. The removal of wildlife habitat is expected to increase competition for adjacent resources. Mitigation measures outlined below and in Chapter 5 describe how these potential impacts would be minimized.

As mentioned above, the Applicant has developed a Project Restoration Plan defining the procedures for the revegetation and rehabilitation of areas temporarily disturbed by the Proposed Project. This plan would be implemented immediately after construction for the areas that are temporarily disturbed, such as portions of the gen-tie line routes, water pipeline, and access road. The future removal of project infrastructure, the revegetation of disturbed areas, and the absence of a continual O&M presence would likely result in the reestablishment of native vegetation as well as the reestablishment of wildlife habitats. Prior to decommissioning a Decommissioning and Site Reclamation Plan would be prepared and approved by the Tribe, BIA and BLM.

The Applicant would incorporate the following BMP measures to help avoid or reduce impacts on wildlife species:

- SWPPP (Erosion and Dust Control);
- SPCC Plan;
- Raven Control Plan;
- Waste Management Plan;
- Weed Management Plan;
- Bird and Bat Conservation Strategy;
- Project Restoration Plan
- Decommissioning and Site Reclamation Plan; and
- Environmental Clearances (Permits).

To further reduce impacts, the following mitigation measures would also be employed:

- Preconstruction surveys for protected species;
- Biological monitors during the construction of the Proposed Project;
- Worker Environmental Awareness Program;

- Reduced night lighting;
- Proper installation of transformer equipment;
- Imported soils that are free from contaminants before use on-site; and
- Scheduling site disturbing construction activities to avoid avian breeding and nesting seasons to comply with provisions of the MBTA, as practicable.

4.8.3.1.2 Gen-Tie Alternative

Effects to wildlife resulting from implementation of this alternative would be similar to those identified for the Proposed Project. The same solar site disturbance would occur and the same BMPs would be employed as mitigation as for the Proposed Project. The alternative gen-tie route would be located on the same habitat types and would utilize the same construction methods and mitigation as the proposed gen-tie. While this route alternative would be slightly shorter, the portion of the route on the Reservation does not parallel an existing ROW for as much of its distance as the proposed gen-tie, so more road construction along the route on the Reservation would be necessary. As a result, habitat disturbance on the Reservation would be approximately the same as the proposed gen-tie. The portion of the line on BLM-administered lands and private lands would be the same as the proposed gen-tie.

4.8.3.1.3 Alternative Water Supply

The Alternative Water Supply would result in impacts to wildlife similar to the Proposed Project. The same site and ROWs would be disturbed and the same BMPs would be employed as mitigation as for the Proposed Project.

The groundwater pumping required to deliver the up to 500 AF of water for the construction phase of the project is not expected to have significant impacts to local stream flows that could potentially impact wildlife habitat downstream. Therefore, potential impacts to downstream wildlife habitat from the proposed groundwater withdrawal are unlikely.

4.8.3.1.4 No Action Alternative

Under the No Action Alternative, the Project would not be constructed so there would be no effects to wildlife resources.

4.8.3.2 Residual Effects - Wildlife

There would be long-term residual effects to wildlife due to the construction of the Proposed Project. The solar site would be disturbed to prepare it for construction and operation of the solar field. Where grading and “disk and roll” is not necessary, vegetation would be trimmed or mowed as needed to allow the surface soils and local drainage to be left undisturbed. This would result in the loss of about 591 acres of wildlife habitat from development of the Proposed

Project. The loss of wildlife habitat would result in a loss of shelter, nesting habitat, and foraging sources for wildlife species and would result in the affected wildlife having to rely more heavily on habitat outside of the Project footprint.

Following decommissioning when all facilities would be removed, disturbed areas would be revegetated in accordance with the Decommissioning and Reclamation Plan. This would reduce the long-term effects to wildlife and habitats.

4.8.4 Special Status Wildlife Species

The list of federally threatened or endangered species occurring in Clark County was reviewed for potential occurrence in and around the project area. Four species listed under the Endangered Species Act (ESA) (1974), one species protected by the Bald and Golden Eagle Protection Act (BGEPA), and one BLM sensitive species were identified as potentially occurring in or around the project area and potentially impacted by the Proposed Project. These include the desert tortoise, Moapa dace, Yuma clapper rail, southwestern willow flycatcher, yellow-billed cuckoo, and golden eagle. Surveys for special status species and habitat analysis suggests that only desert tortoise and golden eagle are in the Project Area. Additionally, the Moapa dace is known to occur only upstream of the Project Area and would not be affected by surface water withdrawals associated with the proposed project. More detail can be found in **Table 3-10** and the Biological Assessment that has been prepared concurrently with this EIS (**Appendix K**).

4.8.4.1 Direct and Indirect Effects - Special Status Species

The previously discussed biological impacts from construction, O&M, and decommissioning are similar to the potential adverse impacts to special status wildlife species.

4.8.4.1.1 Desert Tortoise

4.8.4.1.1.1 Proposed Action

Desert tortoises could be harmed or killed during ground-disturbing activities and as a result of vehicle travel on access roads during construction and operation of the facility. Proposed Project activities could result in direct mortality, injury, or harassment of individuals as a result of encounters with vehicles or heavy equipment. Individual tortoises could be injured or entombed in their burrows. Disruption of tortoise behavior could occur due to noise or vibration from the heavy equipment during construction or operation of facilities. Although unlikely to occur through implementation of mitigation measures (proper disposal and storage of trash), injury or mortality could occur from encounters with workers' or visitors' pets and trash could attract desert tortoise predators such as ravens and coyotes. Desert tortoises may also be attracted to the construction area by application of water for dust control, placing them at higher risk of injury or mortality. Additionally, tortoises may take shelter under parked vehicles and incidental take may

occur when the vehicle is moved. Desert tortoises could be harmed by inadvertent hazardous materials spills, including equipment fuel and hydraulic fluid leaks.

During the life of the Proposed Project, approximately 656 acres of suitable habitat for the desert tortoise would be lost long-term due to the construction of the Proposed Project, and approximately 66 acres would be temporarily disturbed. **Table 4-10** delineates temporary and long-term disturbance to desert tortoise habitat by project component.

Installation of exclusionary fencing at the solar site could result in take of desert tortoises due to equipment operation, removal of tortoise burrows, and subsequent tortoise relocation. Fencing would preclude desert tortoises from re-entering their home range or could separate individuals from their home range. The exclusionary fence would restrict tortoise movement and habitat connectivity (though not significantly) and could result in displacement stress that could result in loss of health, exposure, increased risk of predation, reduced productivity, increased intra-specific competition, and/or death.

The Proposed Project is not expected to result in significant effects to local tortoise genetic or demographic connectivity. Landscape\genetic analysis performed by Latch et al. (2011) identified both natural (slope) and anthropogenic (roads) landscape variables that significantly influenced desert tortoise gene flow of a local population. Although they determined a higher correlation of genetic distance with slope compared to roads, desert tortoise pairs from the same side of a road exhibited significantly less genetic differentiation than tortoise pairs from opposite sides of a road. Project access roads are not anticipated to decrease local population connectivity substantially beyond the existing conditions. Similarly, the fenced site is not expected to limit habitat connectivity and tortoise movement at a local level because the project site is already isolated from more contiguous desert tortoise habitats to the west, south, and east by natural barriers such as the Muddy River and Meadow Valley Wash. Tortoises that presently occur will continue to be able to move around the project site through a corridor approximately 2 miles wide east of the project, including through culverts under the existing railroad.

All desert tortoises found within the proposed solar site boundary of the Proposed Project would be relocated in accordance with USFWS protocols to BLM-managed lands or Tribal lands, outside of the nearest fence in suitable habitat. Capturing, handling, and relocating desert tortoises from the Proposed Project after installation of the fencing would result in take and may also result in death or injury. This is particularly true if relocation methods are performed improperly, such as during extreme temperatures, or if tortoises void their bladders due to handling stress, leaving them susceptible to severe dehydration. Displaced tortoises that do not shelter from extreme temperatures may die from exposure.

Relocation activities could adversely impact the existing tortoises located within a relocation site if tortoises that are infected with upper respiratory tract disease (URTD; e.g., *Mycoplasma agassizii*, *M. testudineum*) or other pathogens are relocated. Once a tortoise is infected with

Mycoplasma, it is a carrier for life, with recurrence of the disease at some point in the future, regardless of treatment (Jacobson 1992). The introduction or spread of URTD would result in the illness and potential mortality of infected individuals. In order to minimize the risk of spreading URTD, health assessments would be conducted for all desert tortoises that would be relocated. Assessments would include blood work and each desert tortoise would be radio tagged to aid in relocation during preconstruction clearance surveys.

During construction, breaches in the solar field exclusionary fencing may occur and desert tortoises could pass through the barrier and be affected by Project-related activities. During operation, surface water flows could also undercut and compromise the desert tortoise fence and allow short-term access to desert tortoise and their predators until such time as repairs are made. If breaches occur, materials and equipment left behind following construction and maintenance activities may entrap or entangle desert tortoises or attract predators such as common ravens and coyotes. Such equipment may also provide shelter for desert tortoises, which, when removed, may result in displacement or injury of a tortoise.

The Applicant has developed a draft Project Restoration Plan defining the procedures for the revegetation and rehabilitation of areas temporarily disturbed by the Proposed Project. The future removal of project infrastructure, the revegetation of disturbed areas, and the absence of a continual O&M presence would likely result in the reestablishment of native vegetation as well as the reestablishment of desert tortoise habitat, returning the site to pre-project conditions. The Applicant has also prepared a draft Decommissioning and Site Reclamation Plan that would be finalized and approved by the Tribe, BIA and BLM prior to decommissioning.

Based on pre-project survey results, approximately 8 (but up to 27) adult and subadult (≥160 mm MCL) tortoises will be captured and relocated from harm's way as a result of the development of the solar site. Because of the difficulty in locating juvenile desert tortoises and eggs, some tortoises may not be identified and relocated prior to construction. No individuals larger than 160 mm MCL are anticipated to be unobserved in the solar site; therefore, all individuals occurring in the solar site in this age class will be relocated. Effects to juvenile desert tortoises and eggs that are undetected on the project sites are discussed later in this section.

It is anticipated that all adult and subadult desert tortoises will be captured and relocated from the fenced solar site and any portion of the action area where individuals may be in harm's way due to project activities. Desert tortoises that are encountered on linear features of the project and in harm's way will be moved the minimal distance out of harm's way to secure and appropriate habitat but no more than 1,000 feet in accordance with the Desert Tortoise Field Manual (USFWS 2009).

Table 4-10
Temporary and Long-Term Impacts (Acres) to Desert Tortoise Habitat on the Proposed Project Area

Project Component		Covertype	Long-Term Impacts (acres)	Temporary Impacts (acres)	Total Impacts (acres)
Solar Site	Project Area	Creosotebush-White Bursage	565	50	615
		Mojave Xeroriparian	11	0	11
		TOTAL	**576**	**50**	**626**
	Access Roads	Creosotebush-White Bursage	**0**	**0**	**0**
		TOTAL	**0**	**0**	**0**
Gen-Tie Line		Creosotebush-White Bursage	14	15	29
		Mojave Xeroriparian	0	1	1
		TOTAL	**14**	**16**	**30**
Water Pipeline		Creosotebush-White Bursage	0	0	0
		Mojave Xeroriparian	0	0	0
		TOTAL	**0**	**0**	**0**
PROJECT TOTALS			**590**	**66**	**656**

Note: These acreages differ from other disturbance acreages in other tables because only potential desert tortoise habitat is included.

Because the tortoise density is very low and the details of the translocation/relocation effort are described in the Biological Assessment (**Appendix K**), the USFWS will not require the development of a separate desert tortoise translocation plan for this project. However, desert tortoises that are captured in the solar site or associated infrastructure will be relocated in accordance with each individual's Service-approved disposition plan. Prior to relocating tortoises captured in the solar site, health assessments, which include visual inspection relative to body condition, clinical signs of disease, and collection of biological samples for disease screening (i.e., blood samples to test for antibodies to pathogens), will be completed for each individual in accordance with the most recent Service guidance (USFWS 2013) and a disposition plan will be prepared. All areas to which tortoises will be relocated from the solar site will be approved by the Service prior to the tortoise's release to ensure habitat suitability. After disease screening results, and approval of disposition plans, the Applicant will relocate all desert tortoises to their respective relocation area. Capture and relocation of individual desert tortoises occurring in the solar site may result in accidental death and injury due to stress or disease transmission associated with handling; and stress associated with moving individuals outside of their established home range.

Mitigation measures are summarized in Chapter 5 and the Biological Opinion (BO) that has been issued by USFWS on December 18, 2015 (**Appendix O**). . The Project will also comply with the following measures as well as with the terms and conditions of the Project BO:

- The Applicant will be required to prepare the following management plans, which will be submitted to the Moapa Band of Paiutes, BIA, BLM, and USFWS (as appropriate) for approval:
    - BBCS
    - Weed Management Plan
    - Raven Control Plan
    - Decommissioning and Site Reclamation Plan
    - Dust Abatement Plan
    - Spill Prevention and Emergency Response Plan
    - Health and Safety Program
    - Fire Management Plan
    - Hazardous Materials and Waste Management Plan
    - Lighting Management Plan
    - Project Restoration Plan
    - SWPPP
    - Site Drainage Plan
    - Traffic Management Plan
    - Surface Water Quality Management Plan
    - Workers Environmental Awareness Program

In summary, adverse impacts on desert tortoises would occur with the implementation of the Proposed Project and activities associated with Operations and Maintenance. Impacts to desert tortoise would include the removal of all desert tortoises from the solar site and the long-term loss of suitable desert tortoise habitat due to the construction of exclusionary fencing. Only the solar site would be fenced for the duration of the operational life of the Project. All ROWs would be unfenced and allow for unrestricted movement of tortoises following construction. Therefore, impacts to movement corridors and habitat connectivity for the tortoise would be limited. Temporary impacts would be short-term and localized to the proposed transmission lines and water pipeline. These ROWs would not be permanently fenced but desert tortoises could be relocated from these corridors during construction and a temporary impact to vegetation and loss of burrows could result. In addition to the long-term loss of 590 acres of suitable desert tortoise habitat that would result from the Proposed Project, relocated individuals would likely impact the fitness of resident desert tortoises that already occupied the translocation site. To minimize all potential impacts, the Applicant would be required to adhere to all terms and conditions outlined in a Project-specific BO.

4.8.4.1.1.2 Gen-Tie Alternative

Effects to desert tortoises resulting from implementation of this alternative would be similar to those identified for the Proposed Project. The same solar site would be disturbed and the same BMPs would be employed as mitigation as for the Proposed Project. The alternative gen-tie route would be located on the same soil types and would utilize the same construction methods and mitigation as the proposed gen-tie. While this route alternative would be slightly shorter, the portion of the route on the Reservation does not parallel an existing ROW for as much of its distance as the proposed gen-tie, so more road construction along the route on the Reservation would be necessary. As a result, habitat disturbance on the Reservation would be approximately the same as the proposed gen-tie. The portion of the line on BLM-administered lands and private lands would be the same as the proposed gen-tie.

4.8.4.1.1.3 Alternative Water Supply

Effects to desert tortoise resulting from implementation of the Alternative Water Supply would be the same as those identified for the Proposed Project. The same site and ROWs would be disturbed and developed and the same BMPs would be employed as mitigation as for the Proposed Project.

4.8.4.1.1.4 No Action Alternative

Under the No Action Alternative, the Project would not be constructed so there would be no effects to desert tortoises.

4.8.4.1.2 Moapa Dace

4.8.4.1.2.1 Proposed Project

The Moapa dace is only known to occur in the Muddy River and several associated headwater springs in the Warm Springs area. Those springs represent the primary water source for the Muddy River to which the Moapa dace is endemic. The Proposed Project would include the withdrawal of up to 500 AF of surface water during construction. The intake for the surface water withdrawals is located several miles downstream of known occupied Moapa dace habitat and the species no longer occurs in the mainstem of the Muddy River in the vicinity of the intake. As indicated in the Project BO (**Appendix O**), the Proposed Project would have no effect on this species.

4.8.4.1.2.2 Gen-Tie Alternative

Impacts to Moapa dace from implementation of the Gen-Tie Alternative would be the same as those described for the Proposed Project.

4.8.4.1.2.3 Alternative Water Supply

Groundwater withdrawals represent the only potential effect to Moapa dace from this alternative. As discussed in the water section, withdrawal of 500 AF of groundwater over the 15-month construction period would not be expected to create a noticeable impact to groundwater or subsequently, flows in the Muddy River.

On July 14, 2005 a Memorandum of Agreement (MOA) was signed by the Southern Nevada Water Authority (SNWA), Meadow Valley Wash Water District (MVWWD), Coyote Springs Investment (CSI), the Tribe and the USFWS regarding the withdrawal of 16,100 AFY from the regional carbonate aquifer in Coyote Spring Valley and California Wash Basins that included conservation measures for the Moapa dace. The MOA outlined specific conservation actions that each party would complete in order to minimize potential impacts to the Moapa dace should water levels decline in the Muddy River system as a result of the cumulative withdrawal of 16,100 AFY of groundwater from the two basins. On January 20, 2006 the USFWS concluded intra-service consultation and issued a PBO entitled the *Intra-Service Programmatic Biological Opinion for the Proposed Muddy River Memorandum of Agreement Regarding the Groundwater Withdrawal of 16,100 Acre-Feet per Year from the Regional Carbonate Aquifer in Coyote Spring Valley and California Wash Basins, and Establish Conservation Measures for the Moapa Dace, Clark County, Nevada* (Programmatic Biological Opinion; PBO). The MOA and PBO include the following conservation measures:

- Implement restoration of Moapa dace habitat on the Service's Apcar Unit of the Moapa Valley National Wildlife Refuge (MVNWR);
- Develop a Recovery Implementation Program (Recovery Program), which would be used to effectuate the goals of the MOA by implementing measures necessary to accomplish the protection and promote the recovery of the Moapa dace, as well as outline the development of regional water facilities and include additional parties as appropriate. The Recovery Program would be developed for the purposes of continuing to identify the key conservation actions that, when implemented, would continue to contribute to off-set any pumping impacts that may result from groundwater pumping;
- Assist in developing an ecological study designed specifically to determine effects of groundwater pumping on the Moapa dace and other aquatic dependent species in the Muddy River system;
- Construct fish barriers in order to prevent additional non-native fishes from migrating into Moapa dace habitat;
- Eradicate non-native fish, such as tilapia from the historic range of Moapa dace;
- Restore Moapa dace habitat outside the boundary of the MVNWR;
- Provide the use of the Tribal greenhouse to cultivate native plants for restoration actions in the Muddy River area;
- Provide access to Tribal lands for the construction and maintenance of at least one fish barrier;
- Dedication of an existing 1.0 cfs Jones Spring water right (MVWD) towards establishing and maintaining in-stream flows in the Apcar tributary system that empties into the Muddy River, and
- Dedication of 460 AFY of water rights (portion of CSI appropriated water rights) to the survival and recovery of the Moapa dace, in perpetuity. In addition, minimum in-stream flow levels were also established in the MOA that trigger various conservation actions should those predetermined levels be reached.

The flow levels would be measured at the Warm Springs West Flume located on MVNWR. These automatic actions are identified in the MOA and are summarized below:

- Should the water flows reach 3.2 cfs, the signatories would meet to discuss the issue and compare/evaluate hydrology data;
- Should the water flows reach 3.0 cfs, during the pendency of the pump test, the Arrow Canyon well would shut down and SNWA would provide the MVWD with the sufficient water quantity necessary to meet their municipal demands. In addition, SNWA and CSI would take necessary actions to geographically redistribute groundwater pumping in Coyote Springs Valley if flows levels continue to decline;
- Should the water flows reach 3.0 cfs or less but greater than 2.9 cfs, SNWA and CSI would restrict groundwater pumping from MX-5 and RW-2 wells, and CSI Well #1 (Permit 70430) and CSI Well #2 (Permit 70429) and other wells in Coyote Spring Valley, in combination, to 8,050 AFY;

- Should the water flows reach 2.9 cfs or less but greater than 2.8 cfs, SNWA and CSI would restrict groundwater pumping from MX-5 and RW-2 wells, and CSI Well #1 (Permit 70430) and CSI Well #2 (Permit 70429) and other wells in Coyote Spring Valley, in combination, to 6,000 AFY, and the Tribe would restrict their pumping (under permit number 54075) in the California Wash basin to 2,000 AFY;
- Should the water flows reach 2.8 cfs or less but greater than 2.7 cfs, SNWA and CSI would restrict groundwater pumping from MX-5 and RW-2 wells, and CSI Well #1 (Permit 70430) and CSI Well #2 (Permit 70429) and other wells in Coyote Spring Valley, in combination, to 4,000 AFY, and the Tribe would restrict their pumping (under permit number 54075) in the California Wash basin to 1,700 AFY;
- Should the water flows reach 2.7 cfs or less, SNWA and CSI would restrict groundwater pumping from MX-5 and RW-2 wells, and CSI Well #1 (Permit 70430) and CSI Well #2 (Permit 70429) and other wells in Coyote Spring Valley, in combination, to 724 AFY, and the Tribe would restrict their pumping (under permit number 54075) in the California Wash basin to 1,250 AFY.

The PBO indicated that the adverse effects associated with the withdrawal of 16,100 AFY of groundwater would not result in “jeopardy” for the Moapa dace. The USFWS estimated that the incidental take of Moapa dace at the programmatic level would be a 22-percent loss in riffle habitat and a 16-percent loss in pool habitat. Current monitoring data indicate that the instream flow at the Warm Springs West Flume is 3.4 cfs, which represents a 0.2 cfs reduction in flows since pumping began. As such, no instream flow trigger points have been reached.

The Moapa dace would not be directly affected by the construction or operation and maintenance of the proposed project. Groundwater withdrawals like those associated with this alternative were previously analyzed in the 2006 PBO which evaluated the cumulative effects associated with the withdrawal of up to 16,100 AFY from the carbonate aquifer in Coyote Spring Valley and California Wash basins. The Tribe is one of several parties that would withdraw water under this analysis. Up to 2,500 AFY of Tribal withdrawals were included in the total 16,100 AFY analyzed in the 2006 PBO. The one-time 500 AF of withdrawals proposed as part of this alternative is included in the previously permitted 2,500 AFY of Tribal withdrawals included in the 2006 PBO analysis. The use of these 500 AF could slightly contribute to ongoing adverse effects to Moapa dace as was analyzed in the 2006 PBO but these impacts would not be expected to be noticeable.

4.8.4.1.1.4 No Action Alternative

Under the No Action Alternative, the Project would not be constructed so there would be no effects to Moapa dace.

4.8.4.1.3 Yuma Clapper Rail, Southwestern Willow Flycatcher, Yellow-Billed Cuckoo

4.8.4.1.3.1 Proposed Project

Yuma clapper rail (Yuma Ridgeway's rail), southwestern willow flycatcher, and yellow-billed cuckoo do not have habitats on the Proposed Project site or nearby areas, but do have habitats upstream and downstream of the Project area. The proposed Project would temporarily use surface water from the Muddy River via a water intake pump and water pipeline. Surface water withdrawals would be insignificant with the project water usage less than 0.01 percent of annual river volume downstream and less than 2 percent of the flow upstream of the Project. Therefore, the amount of water withdrawn would be within the range of normal annual variation and too small to affect these species' preferred habitats (e.g., hydrophytic and riparian vegetation). The Proposed Project would therefore not have a significant impact on habitat that might be used by these listed species

The Proposed Project furthermore will not have a direct population or community level effect on these species. Although there have been two isolated incidents involving Yuma clapper rail near solar projects, this data does not provide a basis for a finding of potential significant impacts. Specifically, a Yuma clapper rail was discovered near the solar field at the Desert Sunlight Solar Project, just south of the Joshua Tree National Park in Riverside County, California. Field data collected in connection with that incident however failed to provide evidence of any direct impact or collision with a PV module. Similarly, another suspected Yuma clapper rail incident involved the SolarGen2 Solar Project near Calipatria, California. In that instance, there was no evidence of any direct impact or collision with a PV module and, in fact, the nearest PV module was approximately 240 feet away.

In response to these incidents, USFWS recently addressed the potential for solar projects to take Yuma clapper rail in the context of its consultation on an application for an incidental take statement for the Blythe Solar Power Project pursuant to Section 7 of the ESA, 15 United States Code (USC) §§1531 *et seq*. Therein, USFWS recognized that interactions between Yuma clapper rail and PV facilities are improbable when such projects are distant from this species' habitat. Specifically, on July 30, 2014, USFWS concurred in the BLM's finding that the Blythe project, located near the Colorado River in Riverside County, California, was "not likely to adversely affect" Yuma clapper rail. Similar to this Project, the Blythe project did not include aquatic habitat for Yuma clapper rail, was "not located in a flight path that would connect aquatic features," and no Yuma clapper rail had been "observed on or over the Project site during project-specific resource surveys."

Only one yellow-billed cuckoo mortality has been documented at a solar facility. The facility, the Ivanpah Solar Energy Generation System (ISEGS) near Primm, Nevada, uses a different generation technology, and this mortality is consequently not indicative of the potential effects of a PV project. No southwestern willow flycatcher mortalities have been documented at solar facilities.

Because of the aforementioned isolated incidents, the possibility that Yuma clapper rail, southwestern willow flycatcher, or yellow-billed cuckoo might encounter the Proposed Project when dispersing is not zero. Due to the low number of mortalities at solar facilities, a lack of habitat near the Project area, and the distance to known occupied habitat, however, the potential for the Proposed Project to cause mortality to these species is low and not reasonably foreseeable. The Proposed Project is therefore not likely to significantly affect these species (see **Appendix K**).

4.8.4.1.3.2 Gen-Tie Alternative

Impacts to Yuma clapper rail, southwestern willow flycatcher, and yellow-billed cuckoo from implementation of the Gen-Tie Alternative would be the same as those described for the Proposed Project.

4.8.4.1.3.3 Alternative Water Supply

Yuma clapper rail, southwestern willow flycatcher, and yellow-billed cuckoo do not have habitats on the Proposed Project site or nearby areas but do have habitats downstream of the Project area. The groundwater hydrology analysis discussed in **Section 4.5** indicated that the proposed maximum one-time withdrawal by the Project would be up to 500 AF over a 12 to 15 month period and that this would not result in observable differences to spring flows in the Muddy River Springs Area. Therefore, because there would be no measurable effects to downstream habitats, there would be no impact to these species from the Proposed Project or action alternatives.

The Alternative Water Supply would result in impacts to these species similar to the Proposed Project. The same site and ROWs would be disturbed and developed and the same BMPs would be employed as mitigation as for the Proposed Project.

The groundwater pumping required to deliver the up to 500 AF of water for the construction phase of the project is not expected to have significant impacts to local stream flows that could potentially impact their habitats downstream as discussed in the groundwater analysis for the Project. Therefore, potential impacts to downstream habitat from the proposed groundwater withdrawal are unlikely.

4.8.4.1.3.4 No Action Alternative

Under the No Action Alternative, the Project would not be constructed so there would be no impact to these species.

4.8.4.1.4 Bats

4.8.4.1.4.1 Proposed Action

Twelve protected bat species have the potential to occur on the Proposed Project site: California leaf-nosed bat (*Macrotus californicus*), California myotis (*Myotis californicus*), Townsend's big-eared bat (*Plecotus townsendii*), western red bat (*Lasiurus blossevillii*), big free-tailed bat (*Nyctinomops macrotis*), fringed myotis (*Myotis thysanodes*), Allen's lappet-eared bat (*Idionycteris phyllotis),* spotted bat *(Euderma maculatum),* Western pipistrelle *(Pipistrellus hesperus*)*,* Brazilian free-tailed bat (*Tadarida brasiliensis), pallid bat (Antrozous pallidus)* and cave myotis (*Myotis velifer*). These species are only expected to be present within the Proposed Project site during nocturnal foraging events. Artificial lighting could alter the foraging behavior of bat species. The loss of the natural vegetation could decrease the prey availability (i.e., insects) within the Proposed Project area for nocturnally feeding bats.

Mitigation measures to minimize potential impact to bats include nighttime light reduction; these would be utilized to reduce potential impacts to protected bat species. These measures are outlined in Chapter 5. A draft Bird and Bat Conservation Strategy (BBCS) that provides detail of the measures that would be used to minimize impacts to bats and birds is included in **Appendix L**. Application of these measures would result in no negative effects to bats.

The Applicant has developed a draft Project Restoration Plan defining the procedures for the revegetation and rehabilitation of areas temporarily disturbed by the Proposed Project (**Appendix E**). The future removal of project infrastructure, the revegetation of disturbed areas, and the absence of a continual O&M presence would likely result in an increase of foraging habitat for bat species and a reduction in collision and ingestion hazards. A Decommissioning and Site Reclamation Plan will be prepared and approved by the Tribe, BIA and BLM prior to decommissioning the Project.

4.8.4.1.4.2 Gen-Tie Alternative

Effects to bats resulting from implementation of the Gen-Tie Alternative would be the same as those described for the Proposed Project.

4.8.4.1.4.3 Alternative Water Supply

Effects to bats resulting from implementation of the Alternative Water Supply would be the same as those identified for the Proposed Project. The same site and ROWs would be disturbed and developed and the same BMPs would be employed as mitigation as for the Proposed Project.

4.8.4.1.4.4 No Action Alternative

Under the No Action Alternative, the Project would not be constructed so there would be no effects to bat species.

4.8.4.1.5 Wild Burros

4.8.4.1.5.1 Impacts from the Proposed Action and Action Alternatives

Wild burros are protected under the Wild Free-roaming Horses and Burros Act. Wild burros would be susceptible to visual and noise disturbance during construction activities and O&M, potentially resulting in behavior alteration to avoid the site.

Given the site's proximity to and fragmentation by I-15, State Highway 168, other roads, and railroads it is highly unlikely that wild burros would be encountered on the Proposed Project area so no impact on burros is expected from either the Proposed Project or action alternatives.

4.8.4.1.6 Avian Species Protected by the Migratory Bird Treaty Act (MBTA)

4.8.4.1.6.1 Proposed Action

Construction of the Proposed Project could cause adverse impacts on avian species, including nesting raptors and birds protected by the MBTA. Impacts on these bird species would typically result from activities that would cause nest abandonment or take of chicks or eggs in active nests, mortality of adults due to collision, or reduction of potential forage and nesting habitat. For most species, the Proposed Project impacts would be confined to areas immediately adjacent to and within the solar site boundary, the access roads, the pipeline route, and the gen-tie routes. For other species such as raptors, Project-related impacts would have the potential to extend up to ten miles or more beyond the Proposed Project area depending on the foraging requirements of the raptor species.

Active bird nests in shrubs or near the ground would be susceptible to being crushed during ground-disturbing activities. Noise and visual disturbance caused by construction and Project-related traffic, including construction at work sites and traffic along Proposed Project access roads would have the potential to cause nest abandonment or habitat avoidance by birds nesting. Nest abandonment would result in mortality to chicks and eggs. The construction of new electric transmission lines could potentially increase the risk of mortality of raptors and non-raptor species by electrocution or collision.

Also, construction could cause birds to avoid suitable habitat and nest or forage in less suitable habitat. Such impacts would cause potential energetic costs to these birds and could indirectly contribute to stress and eventual mortality. Decreased foraging success could decrease the survivorship of chicks in nests near the Proposed Project area.

Although the MBTA covers several avian species, on in particular, the burrowing owl, can be found on solar project sites. Here, no live burrowing owl individuals or active nests were observed, suitable burrows and one dead individual were observed during site surveys. Consequently, burrowing owls may be present on the Proposed Project site (New Fields 2014).

Construction activity could cause nest abandonment or take of chicks or eggs in active nests, mortality of adults, or reduction of potential forage and nesting habitat.

There is currently no clear evidence supporting the theory that PV solar facilities have the potential to attract birds that may collide with panels and be killed as a result of a collision (commonly referred to as the “lake effect”). The level of mortality observed at solar facilities is low and below the threshold where population and community level effects would occur. In addition, high levels of water bird mortalities which would support existence of the “lake effect” have not been reported at solar photovoltaic facilities and are essentially not existent at other solar facilities. The available information indicates that PV solar projects do not appear to be more hazardous than other anthropogenic sources of mortality (Longcore et al. [2013] and Erickson et al. [2014, in revision]). The solar industry is cooperating with Federal and state agencies to fund ongoing research to provide better definition of interactions between avian species and solar facilities. One study on avian impacts at solar facilities has been recently completed by Argonne National Laboratory and the National Renewable Energy Laboratory (ANL/NREL 2015). Reviewing avian mortality data from several PV solar installations, the study concluded that there was no consistent pattern of fatality by taxonomic groups among the solar energy facilities evaluated to support or refute the lake effect hypothesis.

Monitoring conducted during the post-construction period for this Project will be used to evaluate the assumed low avian mortality risk and guide adaptive management planned for in the BBCS.
A BBCS that provides detail of the measures that would be used to minimize impacts to avian species (as well as bats) is included in **Appendix L**.

A draft Habitat Restoration and Revegetation Plan defining the procedures for the revegetation and rehabilitation of areas disturbed by the Proposed Project has also been developed (**Appendix E**). The future removal of project infrastructure, the revegetation of disturbed areas, and the absence of a continual O&M presence would likely result in an increase of foraging and nesting habitat for avian species and a reduction in collision and ingestion hazards over those present during operation of the Project. The Applicant has incorporated the following measures to avoid or minimize impacts on bird species:

- SWPPP;
- Spill Prevention and Emergency Response Plan;
- Hazardous Materials and Waste Management Plan;
- Weed Management Plan;
- Project Restoration Plan;
- Decommissioning and Site Reclamation; and
- Bird and Bat Conservation Strategy

Adverse impacts on MBTA protected species and raptors would occur with the construction/decommissioning of the Proposed Project and Operation and Maintenance

activities. These impacts would be both short- and long-term and would be localized. To further avoid and reduce impacts, the following mitigation measures would be implemented:

- Preconstruction surveys;
- Biological monitors;
- All transmission towers and poles would be designed to be avian-safe according to APLIC (2006 and 2012);
- Installation of flight diverters;
- Perch deterrents;
- Survey for nests along transmission lines;
- Monitor for avian mortalities
- Lighting would be focused in toward the solar site and downward to avoid lighting habitats beyond the Proposed Project site perimeter;
- Proper disposal and storage of garbage;
- Closing of holes and spaces during construction to prevent entrapment;
- Worker Environmental Awareness Program; and
- Scheduling site disturbing construction activities to avoid avian breeding seasons to the extent practicable.

4.8.4.1.6.2 Gen-Tie Alternative

Effects to migratory birds resulting from implementation of the Gen-Tie Alternative would be the same as those described for the Proposed Project.

4.8.4.1.6.3 Alternative Water Supply

Effects to migratory birds resulting from implementation of the Alternative Water Supply would be the same as those identified for the Proposed Project. The same site and ROWs would be disturbed and the same BMPs would be employed as mitigation as for the Proposed Project.

4.8.4.1.6.4 No Action Alternative

Under the No Action Alternative, the Project would not be constructed so there would be no effects to avian species protected by the MBTA.

4.8.4.1.7 Avian Species Protected by the Bald and Golden Eagle Protection Act (BGEPA)

4.8.4.1.7.1 Proposed Action

There is the potential for golden eagles to use the Proposed Project area for foraging. These birds would be susceptible to visual and noise disturbance as described above, potentially

resulting in alteration of foraging behaviors. Golden eagles are protected by the BGEPA, which includes the September 11, 2009 Eagle Rule (Rule) 50 CFR parts 13 and 22.

The Proposed Project does not contain any nesting habitat for golden eagles and a nest survey within 10 miles of the Proposed Project identified only four potential raptor nests (red-tailed hawk or golden eagle), three of which were within ½ mile of one another. The nesting substrate observed during the survey was very low quality; therefore, it is highly unlikely that golden eagles nest within 10 miles of the Proposed Project. The Proposed Project would impact suitable foraging habitat but the 590 acres of this habitat that would be lost is very small (0.02 percent assuming 10-mile foraging area) in comparison to available habitat within project vicinity. Due to the distance between the Proposed Project and suitable nesting habitat, the Proposed Project is not expected to directly impact nesting golden eagles.

Golden eagles would be susceptible to injury and/or mortality from collision or electrocution associated with the short gen-tie line that is part of the Proposed Project. The new line would represent a small percentage of the existing transmission lines currently in the vicinity of the project area. The line would be developed in compliance with the *Suggested Practices for Raptor Protection on Power Lines: The State of the Art* in 2006 (APLIC 2006) and *Reducing Avian Collisions with Power Lines* by the USFWS and the APLIC (APLIC 2012) to minimize risks to raptor species including the golden eagle.

Adverse impacts on BGEPA protected species could possibly occur with the implementation of the Proposed Project and Operation and Maintenance activities but these impacts would be localized and minimal. To further avoid and reduce impacts, the following mitigation measures are being implemented:

- Preconstruction surveys;
- Biological monitors;
- All transmission towers and poles would be designed to be avian-safe according to APLIC (2006 and 2012);
- Installation of flight diverters;
- Installation of perch deterrents;
- Survey for nesting along transmission lines;
- Lighting would be focused in toward the solar site and downward to avoid lighting habitats beyond the Proposed Project site perimeter;
- Proper disposal and storage of garbage;
- Closing of holes and spaces during construction to prevent entrapment; and
- Worker Environmental Awareness Program.

A draft BBCS that provides detail of the measures that would be used to minimize impacts to avian species (including golden eagles) is included in **Appendix L**. The implementation of the proposed Project Restoration Plan outlined in **Appendix E** would re-establish foraging habitat

temporarily disturbed by construction. The draft Decommissioning and Site Reclamation Plan that has been prepared would be finalized and approved by the tribe, BIA and BLM prior to decommissioning of the Proposed Project would likely result in restoration of foraging habitat for golden eagles on the Project site.

4.8.4.1.7.2 Gen-Tie Alternative

Effects to BGEPA protected species resulting from implementation of the Gen-Tie Alternative would be the same as those described for the Proposed Project.

4.8.4.1.7.3 Alternative Water Supply

Effects to BGEPA protected species resulting from implementation of the Alternative Water Supply would be the same as those identified for the Proposed Project. The same site and ROWs would be disturbed and developed and the same BMPs would be employed as mitigation as for the Proposed Project.

4.8.4.1.7.4 No Action Alternative

Under the No Action Alternative, the Project would not be constructed so there would be no effects to avian species protected by the BGEPA.

4.8.4.1.8 Gila Monsters

4.8.4.1.8.1 Proposed Action

Gila monsters could be harmed or killed during ground-disturbing activities and as a result of vehicle travel on access roads during construction and operation of the facility. Proposed Project activities could result in direct mortality, injury, or harassment of individuals as a result of encounters with vehicles or heavy equipment. Individual Gila monsters could be injured or entombed in their burrows. Disruption of Gila monster behavior could occur due to noise or vibration from the heavy equipment during construction or operation of facilities. Gila monsters could be harmed by inadvertent hazardous materials spills, including equipment fuel and hydraulic fluid leaks.

The implementation of the proposed Project Restoration Plan (**Appendix E**) would re-establish habitat temporarily disturbed by construction. The Decommissioning and Site Reclamation Plan that would be prepared and approved by the Tribe, BIA and BLM prior to decommissioning of the Project would likely result in re-establishing foraging habitat for Gila monsters.

The mitigation measures described for the other species above would help avoid or reduce impacts on the Gila monster. Any observations of Gila monsters during field surveys would be reported according to NDOW's updated reporting protocol (NDOW 2012).

4.8.4.1.8.2 Gen-Tie Alternative

Effects to Gila monsters resulting from implementation of the Gen-Tie Alternative would be the same as those described for the Proposed Project.

4.8.4.1.8.3 Alternative Water Supply

Effects to Gila monsters resulting from implementation of the Alternative Water Supply would be the same as those identified for the Proposed Project. The same site and ROWs would be disturbed and the same BMPs would be employed as mitigation as for the Proposed Project.

4.8.4.1.8.4 No Action Alternative

Under the No Action Alternative, the Project would not be constructed so there would be no effects to Gila monsters.

4.8.4.2 Residual Effects – Special Status Species

Construction and operation of the Proposed Project would result in residual effects to special status species similar to those described in the previous wildlife section. The construction of the perimeter fence would severely reduce access to resources within the fenced portions of the Proposed Project. The loss of access would not be mitigated by any of the recommended mitigation measures and would continue to affect special status species throughout the lifetime of the Proposed Project. This loss of habitat would cause affected special status species to rely more heavily on habitat within the surrounding area, increasing the pressure on these resources.

Relocation of desert tortoises could result in detectable residual effects. Even with the Applicant successfully implementing the recommended mitigation measures, the relocation process would still have the potential to adversely impact both the tortoises being relocated and those existing tortoises occupying the relocation area. Detailed information on proposed numbers and allowable take of desert tortoise would be detailed in the Biological Opinion (not yet available, pending completion of Section 7 Consultation).

4.9 Cultural Resources

As outlined in Chapter 3, historic, cultural and religious properties and archaeological resources are documented in the area surrounding the Proposed Project. Archaeological sites including artifact scatters and features identified in the direct effects APE of the Proposed Project by previous studies have been recommended as not eligible for the NRHP and, therefore, do not qualify as historic properties. In addition, there are no historic standing buildings or significant religious properties identified in the direct effects APE of the Proposed Project. Historic properties present within the direct effects APE of the Proposed Project include historic linear

transportation corridors and associated artifact scatters and features. The Congressionally-designated Old Spanish National Historic Trail lies approximately two miles east of the Proposed Project (See **Figure 3-12**).

4.9.1 Indicators

The Proposed Project would affect a historic property or a religious or traditional cultural resource if it would:

- Directly or indirectly displace or destroy important cultural artifacts, features, sites, buildings or structures that contribute to the eligibility of a historic property;
- Alter aspects of the character of cultural artifacts, features, sites, buildings, or structures that make a historic property significant;
- Alter important aspects of the historic setting or feeling of the period of significance of a historic property; or
- Alter the sacred or traditional character of a religious or traditional cultural resource, or impede access to or use of that site.

4.9.2 Direct and Indirect Effects by Alternatives

The Congressionally-designated alignment of the Old Spanish National Historic Trail is located about two miles east but outside the direct effects APE of the Project. As a national historic trail, a trail must have potential for public recreational use or historical interest based on historic interpretation and appreciation. The potential for such use is generally greater along roadless segments developed as historic trails and at historic sites associated with the trail. The segment of the Old Spanish National Historic Trail near the Project is mostly roadless but has not been developed and is not near developed associated historic sites. The presence of recreation potential not related to historic appreciation is generally not important to designation as an historic trail.

A visual assessment was conducted from the Old Spanish National Historic Trail to determine whether the viewshed from the Trail would be potentially affected by the presence of the Project. Four key observation points (KOPs 8, 9, 10, and 11) provide representative views from portions of the designated trail location, and the potential impacts on the Old Spanish National Historic Trail from the Project are described below.

As described in Section 3.13, the Project would not be seen from the locations represented by KOPs 8 and 11 due to intervening topography. KOP 9 is located on the Old Spanish National Historic Trail where it crosses Hidden Valley Road about 2.3 miles southeast of the proposed solar facility. As shown in the visual simulation developed from this location (**Figure 4-10**), the solar field would not be seen from this location due to intervening topography. However, a section of the Project gen-tie could be seen in the center-left of the simulation just above the

intermediate ridgeline. This would not be obvious to the viewer because of the several existing larger lines closer to this location. The addition of the new gen-tie would not impact public use and enjoyment of the historic route and its remnants in this area.

KOP 10 is located on the Old Spanish National Historic Trail about 2.2 miles southeast of the proposed solar facility. The solar field would be visible from this location as a thin dark line at the top of the distant ridge in the center-right of the photo. In addition, the Project gen-tie could be seen in the center of the simulation (**Figure 4-11**). However, these facilities would not be obvious to the viewer and would not impact public use and enjoyment of the historic route and its remnants in this area because of the distance and several existing larger lines in this view.

The small lithic scatters and trash sites identified in the APE are recommended not eligible for the NRHP. The nine sites that have prehistoric rock rings have been recommended eligible for the NRHP because of the potential for obtaining additional information by further study. The historic trails (School, Post Office, and Moapa trails) represent a significant contribution to history of the Moapa Band of Paiutes' way of life and are recommended as eligible to the NRHP. The historic north-south road, recommended eligible to the NRHP, is also important to the history of the region as a potentially important road/transportation corridor heading north from the Old Spanish Trail/Old Mormon Wagon Road. The Union-Pacific Railroad is eligible for its importance to the history of the region. The communications site is eligible because of its association with the nation's history during the Cold War. The site is completely dismantled and its information potential has been exhausted. The pre-World War II camp is fenced to prohibit public access, and is in an area that will not be used for the proposed Project.

BIA sent the Section 106 consultation letter to the SHPO on August 25, 2015 and it is contained in **Appendix G**. Of the 14 eligible or potentially eligible historic properties located within the Project Area's direct effects APE, seven prehistoric sites would be avoided by the design configuration of the Project. There would be no adverse effect to four of the properties (the historic communications site, and historic trails [School, Post Office, and Moapa trails]) because they would be spanned by the gen-tie line and thus not alter those characteristics of the properties that make them eligible for the NRHP. This determination also applies to the historic World War II camp / ammunition dump. The remaining three properties (two prehistoric lithic scatters with rock rings and the North/South Road) cannot be avoided and would be adversely affected.

BIA's determination of adverse effect requires development of a Memorandum of Agreement (MOA) between the Tribe, BIA, BLM, Aiya Solar, and SHPO. This MOA defines the steps to be taken to lessen, resolve, and/or mitigate the adverse effects to the three properties identified above. A draft copy of the MOA is contained in Appendix P. The final, executed document will be included as an appendix to the Record of Decision (ROD).

4.9.2.1 Action Alternatives

Potential impacts to cultural resources that would result from the construction, operation, and decommissioning of the two Action Alternatives would be generally the same as those identified for the Proposed Project. Project solar components would be located within the same footprint and the same ROWs would be utilized except for a section of the alternative gen-tie.

The construction process associated with development of the action alternatives would be similar to the Proposed Action and the same mitigation would be applied. Any significant or potentially eligible cultural resource site that could not be avoided would need site-specific mitigation.

4.9.2.2 No Action Alternative

Under the No Action Alternative, the Proposed Project would not be developed and there would not be a direct or indirect change in terms of known effects to historic properties or cultural or religious resources.

4.9.3 Residual Effects

Direct effects to cultural resources are permanent and irreversible. Any loss or damage to a historic property that cannot be avoided, including mitigation, would be a residual effect. However, such losses are not expected because mitigation measures would be implemented.

No indirect effects to the historic setting or feeling of a historic property such as visual intrusion on the National Historic Trail would occur as the Project would not be readily visible from the trail as described above.

4.10 Socioeconomic Conditions

This section discusses effects on social and economic resources that may occur with implementation of the Proposed Project or alternatives. The additional jobs created by the Proposed Project would be a benefit to the Tribe and community. In addition to employment benefits, there would also be benefits to Reservation-area businesses from the demand for a wide range of supplies and services generated by the Project. The Tribe currently has relationships with local businesses, which would continue if the Proposed Project is built and operated.

There are no specific Federal thresholds of significance for socioeconomic impact assessment. Significance varies based on the setting of the Proposed Project (40 CFR 1508.27[a]), but 40 CFR 1508.8 states that indirect effects may include those that are growth-inducing and others

related to induced changes in the pattern of land use, population density, or growth rates. In addition, the regulations state, “Effects include….cultural, economic, social, or health, whether direct, indirect, or cumulative.” Effects may also include those resulting from actions that may yield both beneficial and detrimental effects, even if on balance the agency believes that the effect would be beneficial (40 CFR 1508.8).

For the purposes of this EIS, the Proposed Project would affect social and economic conditions if it would:

- Result in a permanent or temporary population increase larger than local services, infrastructure, or population can accommodate; or result in a tax burden to local residents not offset by the Proposed Project’s generation of revenues.

4.10.1 Direct and Indirect Effects by Alternatives

This section describes effects under each alternative following the requirements described under NEPA. During the construction phase, the increased spending on wages, materials, and services should have beneficial direct and indirect effects on local businesses. These indirect impacts are anticipated to continue during the operational phase of the Proposed Project but at a lower rate because the facility workforce, payroll, expenditures on materials and services, and taxes would be at a lower level than construction. The Proposed Project should not result in any long-term change in the population size, number of housing units, transportation, or demand for services in the Moapa area but employment level and income would increase a small amount from the 5 members of the operational workforce.

4.10.1.1 Proposed Project

The socioeconomic impacts associated with the Proposed Project are discussed below under each resource section. Due to the similarities of the Action Alternatives and the associated socioeconomic issues, the beneficial or detrimental impacts would be similar to the Proposed Project.

4.10.1.1.1 Social

The Project is not expected to have potential effects on the social well-being of groups representing the concerns of area stakeholders. Potential social effects described in terms of effects to social well-being relate to how a particular social group, individual, or stakeholder interprets how the Proposed Project or any of the Action Alternatives may affect their environment and how such an effect relates to the integrity, quality, use, and enjoyment of socioeconomic resources. The Project would not affect historically used open spaces and quality habitat supporting recreation and wildlife appreciation and other resources necessary to maintain the historic quality of life that influences the social well- being of stakeholders. Social well-being can potentially be affected by each phase of the proposed Project (construction, O&M, and decommissioning). It is also not expected to affect the level of participation and perceived degree of control that stakeholders have over their environment, its resources, and the government institutions that have stewardship obligations to manage these resources in a sustainable manner.

4.10.1.1.2 Demographics and Social Trends Population

Construction. The construction phase is expected to have a short-term, negligible impact on the population of Clark County. During the peak construction, the workforce could reach 1,200 but the majority of workers would be expected to be local. This small temporary influx of workers could be accommodated by Clark County where infrastructure is designed for seasonal demands and fluctuations from global tourism. Therefore, the Project would not cause a temporary population increase that would necessitate additional local public services or investment in infrastructure capacities that could not be provided from existing resources.

Operations and Maintenance. The operational phase is expected to have no long-term, impact on the area's population level. When construction is completed and the Proposed Project or Action Alternatives are operational, five permanent staff would be required to operate and maintain the facility and provide plant security. Nearly all of these jobs would be expected to be filled by the local labor pool as total unemployment in Clark County as of October 2014 was 130,152 persons.

4.10.1.1.3 Housing

Construction. The construction phase is expected to have a small short-term beneficial impact on the Clark County permanent and temporary housing stock. The impact would not cause a temporary strain that would necessitate additional local public services or investment in public infrastructure capacities that could not be provided from existing resources. Clark County has a high vacancy rate for rental units, and a large hotel/motel room inventory. Therefore, sufficient temporary housing should be available within the Greater Las Vegas/Clark County area to accommodate non-local workers and their families/dependents during the duration of construction.

Operations and Maintenance. The operational phase would have a minimal long-term effect on the area's housing stock. The Proposed Project would permanently employ approximately five full-time workers that would be expected to be mostly from the region and permanent residents. Therefore, the housing impact would be negligible.

4.10.1.1.4 Economic Base Impacts: Employment, Earnings & Income

The construction phase would be beneficial to the local and regional economy. Construction spending would provide a short-term economic benefit within Clark County over the construction period. During operations, permanent direct employment, payroll, and O&M-related spending would provide a long-term positive recurring stimulus to the Tribe and region's economy.

Economic impacts include both direct and indirect effects associated with the linked supply chain and spending from wages. Direct effects are direct expenditures from construction activity such as payroll spending and locally procured supplies and equipment to support the Project. As the direct spending is subsequently re-spent by employees, suppliers and vendors, indirect impacts would be created.

4.10.1.1.4.1 Employment

Construction. The construction phase is expected to have a short-term, beneficial impact on Clark County's and the Reservation's employment levels. The Clark County construction sector has been impacted by the recession and Project construction would provide a short-term boost to this sector since the majority of construction workers would be expected to be hired from the local region including the Tribe. Under the Tribal Employment Rights Ordinance (TERO) agreement between the Tribe and the Applicant, Tribal members would have first right of refusal for any job positions for which they are qualified. During construction activity, employment would reach an average of 700 to 800 workers with a peak not expected to exceed 1,200 workers at any given time. The construction phase is expected to last 12 to 15 months.

As mentioned above, it is likely that most of the workforce would be local and commute from the Clark County/Greater Las Vegas region. Therefore, most of their earnings would be recycled back into the Clark County regional economy through spending of disposable income. In

addition, non-local workers would provide a temporary stimulus to the local economy as they spend per diem money on hotels, meals, and consumables but those who do not relocate to the area would be expected to spend most of their earnings outside of the region.

The construction jobs are expected to be relatively high-paying. These jobs are clean energy/renewable energy opportunities that are expected to grow at above-average rates and pay above-average wages. The Proposed Project would, therefore, help diversify the labor force of the Clark County and add capacity and valuable utility-scale solar installation experience to the local labor pool.

The direct spending from payroll and direct expenditures on locally-procured materials, equipment, and supplies would also create jobs.

Operations and Maintenance. During the operational phase, the Proposed Project is expected to employ approximately five full-time workers to operate and maintain the facility and to provide plant security.

4.10.1.1.4.2 Unemployment

The construction and operational phase of the Project is expected to have a short- and long-term, beneficial impact on Clark County's and the Reservation's unemployment levels. As mentioned above, Tribal members would have first right of refusal for any job positions for which they are qualified. As a result of this agreement, unemployment levels within the Reservation could decrease in the short and long term.

4.10.1.1.4.3 Earnings / Income

The Proposed Project and the Action Alternatives are expected to have a positive effect on employee earnings and personal income in Clark County and the Moapa area. Construction is expected to have a positive, short-term impact on Tribal and regional income and the economy of Clark County. The Operation and Maintenance phase is expected to have a long-term, beneficial impact to the Tribal and regional economy and area personal income. During operation, the Project would create approximately five direct full-time equivalent jobs, and less than one indirect job, with a total annual income impact of approximately $250,000.

4.10.1.1.4 Tourism and Traffic

Given the remote, sparsely-populated area where construction would take place and the presence of other nearby power plants and electrical infrastructure, it is unlikely that tourism would be negatively impacted by construction or operational activity. There is a sufficiently large stock of available housing and motel/hotel room inventory (an oversupply) in the region that can accommodate both tourists and additional non-local workers who require temporary lodging. Construction workers, truckers, and others would likely increase the number of visitors to the Tribe's Travel Plaza, resulting in a beneficial increase in retail sales and gaming. A

smaller but beneficial increase in expenditures could result from purchases and gaming by permanent Operation and Maintenance staff.

Traffic congestion would be unlikely during the construction phase or operational phase of the Project.

4.10.1.1.5 Public Revenues

Construction. During construction, the Proposed Project or any of the Action Alternatives would generate a short-term, positive, non-recurring contribution to Tribe and non-tribal public revenues. The Tribe would benefit from the sale of water, rock and cement during the construction phase. In addition, the Tribe could benefit from increased sales at the Tribal Plaza restaurant and store.

During the construction phase, the local workforce would earn payroll and pay taxes on employee compensation that would flow to Federal, state, and local jurisdictional treasuries. In addition, tax revenues for Clark County would also be generated from the direct and indirect construction expenditures on materials, equipment, and supplies.

Operations and Maintenance. Over the 30-year lease agreement of the Proposed Project or any of the Action Alternatives, the Proposed Project would generate an annual rent to the Tribe as specified in the lease agreement. This long term predictable revenue would be used by the Tribe to expand social programs, economic development, resource protection or other purposes for the Tribe. Payments would also be made to the Tribe by the Applicant in lieu of taxes in accordance with the Tribal Tax Agreement.

In addition, the BLM would obtain revenues from the annual rents for ROWs associated with the gen-tie lines.

In addition, the annual O&M expenditures on materials and supplies would generate tax revenues to Clark County during the up to 30-year operating life of the Project. Operational payroll would also generate revenue to Federal, state, and local treasuries.

Decommissioning. At the end of the 30-year lease, if the Project does not continue to operate under a lease extension, the solar plant and associated infrastructure would be dismantled and the impacted areas would be reclaimed. The potential effects on socioeconomic resources from decommissioning would be similar to construction for the duration of the decommissioning period. These activities would also provide a short-term stimulus to the local economy. In addition, the land occupied by the Project would become available for other potential uses, including the historic, traditional desert uses of the property under tribal stewardship.

The Project would have a negligible impact on public revenues from construction through decommissioning.

4.10.1.1.6 Community Infrastructure Public Services and Utilities

The incremental demand on public services during construction, operations, and decommissioning is not anticipated to result in stresses placed on service capacities or infrastructure. The existing and projected public resources within Clark County and the Moapa area can accommodate the service demands generated by the Project.

Furthermore, the Project would not result in a noticeable population increase in Clark County. In addition, over the long-term life of the Project, the assets would generate annual rent revenue that would be sufficient to offset any new demands on tribal resources arising during operations.

4.10.1.1.6.1 Water and Wastewater

Construction and Decommissioning. During the construction and decommissioning phases, water would be used for dust control and to supply water for other construction needs. During these phases, one or more storage tanks (potentially including water trucks) would be located on the Project site and utilized for temporary storage of water. The storage tanks would allow for water use during peak water-usage periods without adversely impacting other uses.

Wastewater generated would be primarily sanitary waste. During construction, portable toilets or holding tanks would be used for sanitary wastewater. Wastewater would be processed and disposed of in accordance with the applicable laws governing these effluents.

Operations and Maintenance. During operations, water would be needed for panel washing and domestic use by approximately 5 on-site personnel. It is estimated that these requirements would amount to 5 AFY. Water would be supplied via a tap into the Moapa Valley Water District (MVWD) pipeline that crosses the solar site. A permanent, aboveground water tank would be located in the O&M area to provide storage for operational water needs and water for fire protection.

The O&M building would also generate on-site domestic water and sanitary sewer waste that would be treated and disposed of through an approved septic tank and drain field system. Given the small number of permanent staff operating the facility, these wastewater loads would be small.

The Project would have a negligible impact on water and wastewater services from construction through decommissioning.

4.10.1.1.6.2 Fire and Emergency Medical Services

Construction and Decommissioning. During a large-scale construction project (and decommissioning), there is the potential for emergencies and accidents. This risk would be managed by the implementation of the Project's health and safety plan. Clark County also has resources near the Proposed Project and the Tribe has an agreement with Clark County Fire

Department to provide fire protection and emergency medical response to the Reservation. The Fire Department currently has five fire stations that are manned by volunteer firefighters providing service to the area, including Station 72 in Moapa Town

The Proposed Project would include fire control features. A permanent, aboveground water tank would be located in the O&M area to provide storage for operational water needs and water for fire protection.

Operations and Maintenance. During the operational phase, the on-site fire protection water system would be supplied from the above-mentioned water storage tank located near the O&M building. In addition, resources from the local stations could also be mobilized in the event of an emergency.

The Project would have a negligible impact on fire and emergency services from construction through decommissioning.

4.10.1.1.6.3 Police

Construction and Decommissioning. The Proposed Project's built-in security features would help place minimal demands on County or tribal police resources. Security at the Project would be achieved by a combination of fencing, lighting, and security patrols. The Project would provide 24-hour security during Project construction.

Operations and Maintenance. During operations, the Project site would be staffed and regular security patrols would be conducted throughout the site. Lighting would also be provided at the O&M building and the main plant access road entrance. In addition, a perimeter security system could also be installed if necessary.

The Project would have a negligible impact on police services from construction through decommissioning.

4.10.1.1.6.4 Hospitals

Construction. It is possible that accidents requiring ambulance services and hospital treatment may occur during the construction phase. To minimize this possibility, the Applicant would require all construction contractors to operate under an approved health and safety program that meets industry standards. The closest hospital is Mesa View Regional Hospital located in Mesquite, Nevada approximately 30 miles northeast. There is also a small medical facility located at the Reservation.

Operations and Maintenance. It is possible that accidents could occur during Proposed Project operations. Given the small number of permanent staff manning the facility and the safety plan and protocols to be followed, the probability of occurrence of any accidents and their annual

frequency would be low. The regional hospitals and emergency medical service facilities are expected to be able to accommodate any medical needs with their current levels of staffing.

The Project would have a negligible impact on medical services from construction through decommissioning.

4.10.1.1.6.5 Public Schools

Construction and Decommissioning. The construction phase is expected to last 12 to 15 months. During that time, it is possible but unlikely that some of non-local workers may relocate to the area with school-aged children. Clark County School District provides public education services to the County. Northeast Clark County is served by two high schools, two middle schools, and three elementary schools. Ute Perkins Elementary School is located in Moapa Town. All have class sizes and student teacher ratios that are below the school district averages for the South region suggesting that additional students could be accommodated by the existing school system.

Operations and Maintenance. The operation of the Project would not be expected to have any noticeable effect on public school services because the addition any children associated with the 5 permanent workers would be accommodated by the existing school system.

4.10.1.1.6.6 Solid Waste

Construction and Decommissioning. Construction and decommissioning would generate nonhazardous solid waste, some nonhazardous liquid waste, and hazardous waste (solid and liquid). All of the hazardous wastes would be generated at the construction site.

The generated solid wastes could be easily accommodated by existing regional public facilities including waste management processing and recycling centers. Wastes would be recycled as feasible and non-recyclables would be disposed of at a permitted landfill. The waste would likely go to the APEX Regional Waste Management Center located in Clark County at 13550 N. US Highway 93. The Applicant would prepare a Waste Management Plan describing the storage, transportation, and handling of wastes; recycling, and the identification the specific landfills that would receive wastes that cannot be recycled. Hazardous wastes would be managed in accordance with RCRA 42 United States Code (U.S.C.) 6901, et seq., RCRA's implementing regulations at 40 CFR 260, et seq., and other applicable state and local regulations.

Operations and Maintenance. During operations, the facility would generate small amounts solid wastes that could be handled easily by the existing capacities of local waste management facilities, transfer stations, and area landfills.

The Project would have a minor impact on solid waste management from construction through decommissioning.

4.10.1.2 Gen-Tie Alternative

Socioeconomic effects resulting from implementation of the Gen-Tie Alternative would be the same as the Proposed Project.

4.10.1.3 Water Supply Alternative

Socioeconomic effects resulting from implementation of the Water Supply Alternative would be generally the same as those identified for the Proposed Project. Under this alternative, the solar project and associated facilities would be essentially the same with the same site footprint.

4.10.1.4 No Action Alternative

Under the No Action Alternative, the Proposed Project and Alternatives would not be developed and no socioeconomic impacts (detrimental or beneficial) would occur.

4.10.2 Residual Effects

During construction phases of the Proposed Project, there would be short-term and beneficial residual effects on the regional economy, personal income and employment levels, and tax revenues. During O&M phases, there would be long-term and beneficial residual effects on the same parameters Effects on social and economic conditions from decommissioning are also expected to be beneficial.

4.10.3 Environmental Justice Impacts

This section discusses effects on environmental justice that may occur with implementation of the Proposed Project or alternatives. Data used for the environmental justice analysis were obtained from the 2010 Census and are presented in detail in the Environmental Justice Section in Chapter 3. The Moapa Reservation (CT 59.02) contains a Native American population that is considered a minority. As Native Americans, residents on the Reservation meet the criteria of a minority population so any project-related impacts would affect a minority population. However, the Proposed Project would result in positive impacts on this population that arguably outweigh the project impacts, which themselves will be mitigated to less than significant levels..

4.10.3.1 Indicators

Consistent with Executive Order (EO) 12898, Federal Actions to Address Environmental Justice in Minority Populations and Low-Income Populations (February 11, 1994), this environmental justice analysis identifies and addresses any disproportionately high and adverse human health or environmental effects of actions on minority and low-income populations. The CEQ (1997) has issued guidance to Federal agencies on the definition of disproportionately high and

adverse effects as used in EO 12898. This guidance instructs agencies, when determining whether environmental effects are disproportionately high and adverse, to consider the following three factors to the extent practicable:

- Whether there is or would be an impact on the natural or physical environment that significantly (as employed by NEPA) and adversely affects a minority population, low-income population, or Indian tribe. Such effects may include ecological, cultural, human health, economic, or social impacts on minority communities, low-income communities, or Indian tribes when those impacts are interrelated to impacts on the natural or physical environment;
- Whether environmental effects are significant (as employed by NEPA) and are or may be having an adverse impact on minority populations, low-income populations, or Indian tribes that appreciably exceed or are likely to appreciably exceed those on the general population or other appropriate comparison group; and
- Whether the environmental effects occur or would occur in a minority population, low-income population, or Indian tribe affected by cumulative or multiple adverse exposures from environmental hazards.

4.10.3.2 Direct and Indirect Effects by Alternative

This section discusses potential direct and indirect effects on environmental justice populations under each alternative. Analysis for this section was completed by assessing potential temporary (i.e., construction) and permanent impacts due to the implementation of each alternative and comparing these impacts to the census tracts, block groups, and blocks within and in the vicinity of the Proposed Project.

4.10.3.2.1 Proposed Project

The footprint of the proposed Project is fully contained within the Reservation boundaries. Portions of the gen-tie line that would connect to the Reid-Gardner substation would be located on the Reservation and BLM and private lands. The Proposed Project would not disproportionately affect minority and/or low-income populations except for the beneficial impacts discussed below and no displacements or permanent changes in populations would occur. As discussed above, it is anticipated that the Proposed Project would have a positive effect on Tribal members and the non-Indian local population, by creating both temporary and long-term jobs and revenue.

4.10.3.2.2 Gen-Tie Alternative

The environmental justice impacts resulting from implementation of the Gen-Tie Alternative would be the same as those for the Proposed Project.

4.10.3.2.3 Water Supply Alternative

The environmental justice impacts resulting from the Water Supply Alternative would also be the same as those described for the Proposed Action.

4.10.3.2.4 No Action Alternative

Under the No Action Alternative, the Proposed Project and the Action Alternatives would not be built. The land that would have been occupied by the Proposed Project would continue to be used in the manner designated by the Tribe. There would be no temporary or permanent impacts and/or benefits (such as jobs or rent payments) to any potential minority, low-income, or Native American communities either within or in the vicinity of the study area.

4.10.4.3 Residual Effects

The Proposed Project would have an effect on minority, Native American populations but the effects would be positive on this population by creating both temporary and long-term jobs and revenues. These beneficial impacts would the primary residual effect on this population.

4.10.5 Indian Trust Assets

The Proposed Project would impact the Reservation lands where the Project and associated ROWs are constructed. As described in previous sections, there are likely to be adverse impacts associated with site preparation activities as well as construction vehicles on roadways. Vegetation and wildlife on or near the Proposed Project would also be adversely impacted. Indian Trust Assets, such as fishing rights and minerals would not be impacted by implementation of the Proposed Project. The Project's proposed use of tribal water would exercise the Tribe's water rights demonstrating their legitimate need for these water rights against any adverse claims by others in the future.

4.11 Resource Use Patterns

This section discusses effects on lands and realty that may occur by implementing the Proposed Project or alternatives.

4.11.1 Indicators

The Proposed Project would affect land use and realty if it would:

- Conflict with existing Federal, Tribal, state, or local land-use plans or policies;
- Conflict with existing BLM land-use authorizations; or
- Change public land disposition.

4.11.2 Direct and Indirect Effects by Alternatives

4.11.2.1 Proposed Project and Action Alternatives

The Proposed Project and the other Action Alternatives would be constructed mostly on Reservation land and ROWs for the gen-tie line to the Reid Gardner substation would be located on both Reservation and BLM lands. The Proposed Project site is located in an area designated by the Tribe for economic development. The Proposed Project and action alternatives would not result in impacts to any Federal, state, or local land-use plans or policies, existing BLM land use authorizations, public land disposition, or land tenure adjustments. Below is a discussion of potential impacts to lands and realty as a result of the Proposed Project or the Action Alternatives.

4.11.2.1.1 Utilities

There would be no impacts to existing utilities as a result of the Proposed Project or any of the Action Alternatives. Continued access to existing transmission lines and pipelines in the area by their owners would be accommodated minimizing the effects on existing utilities in the vicinity of the Reid Gardner power plant and substation and nearby utility corridor.

4.11.2.1.2 Airports

Perkins Field Airport in Overton, Nevada is the closest airport at approximately 12 miles southeast of the Proposed Project. The airport was constructed to support emergency landings from aircraft leaving Nellis Air Force Base (NAFB) and today is used mostly for local traffic. The airport averages about 100 flights per week. The next-nearest airport is Echo Bay Airport at over 27 miles away. The Proposed Project construction and operations would have no impact to airports or airport operations.

The Proposed Project and alternatives are not expected to create hazards for pilots. The profile of the PV technology is low to the ground (less than 15 feet). PV technology does not create significant glare as PV panels are designed to absorb as much light as possible. Also, for the same reasons, the PV technology would not create thermal boundaries that would affect aircraft operations. More discussion of potential glare effects is included in the **Section 4.13** (visual resources).

The PV solar technology and the proposed gen-tie lines would not require FAA notification. The gen-ties would not be expected to create additional air navigation hazards because there are multiple existing transmission towers in the area.

If pilots eject over the Proposed Project site, potential damage to the solar field may occur depending on the altitude and direction of the aircraft during an emergency ejection. If ejected

pilots land within the solar field, they would not be expected to be affected by the solar components as they would be protected by their flight suits and helmets with glare shields.

4.11.2.1.3 Hunting, Fishing and Gathering

No hunting, fishing or gathering has been reported or documented by the tribe in the vicinity of the Proposed Project. Therefore, there would be no impacts to this activity as result of the Proposed Project or Alternatives.

4.11.2.1.4 Grazing Allotments

There are no grazing allotments within the Reservation or on BLM lands near the Proposed Project site. It is unlikely that grazing would occur in this location given the industrial nature of the BLM lands surrounding the Reid Gardner power plant and substation and nearby utility corridor.

4.11.2.1.5 Mining

The Moapa (Ready Mix) Pit – Aggregate, located 1.8 miles from the Proposed Project is the only active mine located within 5 miles of the Proposed Project. On Reservation land, the Tribe has no future plans for mining within the area. The Proposed Project and the Action Alternatives would not inhibit access to leasable, locatable, and salable energy and mineral resources on BLM lands. In addition, it is unlikely that such development would be proposed to occur on the BLM lands associated with this Project as they are within or adjacent to the Reid Gardner substation and existing transmission lines. Therefore, the Proposed Project and Action Alternatives would not impact mining of public resources or limit the potential for mining on public lands.

4.11.2.2 No Action Alternative

Under this alternative, the Proposed Project would not be developed and there would be no effect on land use and realty.

4.11.3 Transportation/Motorized Vehicle Impacts

This section discusses effects on transportation could may occur with implementation of the Proposed Project or alternatives.

4.11.3.1 Indicators

The Proposed Project would affect transportation levels if it would:

- Cause an increase in traffic that is substantial in relation to the existing traffic load and capacity of the street system;
- Produce an exceedance, either individually or cumulatively, of a level of service (LOS) standard established by the local county congestion management agency;
- Degrade existing road conditions as a result of construction.

4.11.3.2 Direct and Indirect Effects by Alternative

Traffic effects could result from physical changes to roads, such as closures and re-routing, construction activity, introduction of construction or O&M-related traffic on local roads, or changes in daily or peak-hour traffic volumes created by Project traffic.

4.11.3.2.1 Proposed Project

The Proposed Project would result in effects to traffic volumes, effects to the LOS, and effects to access.

1. Cause an increase in traffic that is substantial in relation to the existing traffic load and capacity of the street system.

Construction. Construction of the Proposed Project would require activities and equipment movement on public roadways including I-15 and SR 168. Heavy equipment would be transported to the site and would likely remain for the duration of construction.

Construction would result in a short-term increase in traffic volume. A maximum of up to 2,400 trips per day would occur from the construction workforce using the 1,200 maximum workers on-site during the height of construction activities and assuming no ride sharing (1,200 morning trips and 1,200 evening trips) and assuming they all drive separately. Also, up to 200 trips per day (100 trips to the site and 100 trips leaving the site) would occur as a result of delivery of construction equipment and materials to the site. Combined, these would result in an increase of 2,600 vehicle trips per day during construction.

Access to the Proposed Project would be provided via I-15 to the SR 168 exit (Exit 90). From this exit, traffic would proceed west along SR 168 to the access points for the solar project area on both the north and south sides of the highway. Effects to local traffic patterns are discussed by road type and at intersection level.

Interstate 15 - Workers and delivery drivers would use I-15 as the primary access route to the Proposed Project via SR 168 (Exit 90) and Reservation Road. An increase in traffic volume would occur on I-15, the I-15/SR 168 interchange, and SR 168. The maximum (worst-case scenario) of 2,500 additional vehicle trips per day (1,250 trips in each peak period) would not be expected to degrade the LOS on these roads as the LOS values at all of these locations are currently at acceptable conditions (LOS C or better).

2. Produce an exceedance, either individually or cumulatively, of a level of service (LOS) standard established by the local county congestion management agency.

Local Roadways. After exiting I-15, vehicles would access the site using SR 168. There is moderate traffic on SR 168 under the existing conditions (Chapter 3). Local road conditions are currently acceptable at LOS C or better, and the addition of a maximum of 2,500 vehicle trips would not likely result in a substantial effect on these roads. The Proposed Project would result in short-term effects on traffic volume during construction and would not be expected to adversely affect traffic flow on local roadways during peak construction.

Intersections. There are two, two-way, stop-controlled intersection at the intersection of I-15 and SR 168. There is one, one-way stop-controlled intersection at SR 168 and Reservation Road. The addition of a maximum of 2,500 daily vehicle trips (1,250 per each peak period) should not degrade the LOS to an unacceptable level (LOS D, E, or F) but it is possible that there could be some queue build up at the intersection of SR 168 at the access points to the Project during daily worker arrivals/departures which would eventually dissipate without much delay as the traffic on SR 168 is minimal. Expected delays would be within the acceptable ranges for the AM and PM peak hours, so no mitigation would be recommended. **Appendix M** contains a draft traffic management plan that outlines potential mitigation.

3. Degrade existing road conditions as a result of construction.

Construction. Construction traffic can impact the condition of public roads through increased use. Because the Proposed Project is in a relatively undeveloped area with little current road use and construction would occur over a short time period, it is anticipated that Proposed Project construction would not result in any measurable effects to access or road conditions.

Operation and Maintenance. O&M of the Proposed Project would increase local traffic volume up to 30 trips per day (for 5 staff, 5 visitors and 5 delivery trucks, including morning and evening trips). There would also be additional irregular increases in traffic volume due to scheduled and unscheduled maintenance. Additional traffic volume generated during O&M would be a long-term increase but its small volume would not decrease or disrupt existing primary access to public roads throughout the area, nor would it affect the LOS.

Decommissioning. Typical activities during decommissioning are similar to construction. Short-term increases in the use of local roadways would occur during the decommissioning period similar to but less than those identified for the construction period.

4.11.3.2.2 Water Supply Alternative

Under the Water Supply Alternative, the traffic patterns would be the same as those described for the Proposed Project. Therefore, the traffic effects would be minor and similar to those identified under the Proposed Project and the same mitigation would be applicable.

4.11.3.2.3 No Action Alternative

Under this alternative, development of the Proposed Project would not occur and there would be no effect on transportation or motorized vehicle access.

4.11.3.3 Residual Effects

Under all action alternatives, there would be short-term and long-term increases in traffic volume that could not be eliminated completely through mitigation. Both short-term and long-term traffic increases would not be likely to affect the traffic patterns or LOS at any of the roadway segments in the area.

4.12 Special Management Areas

This section discusses effects of the Proposed Project on Special Management Areas (SMAs) that would result with implementation of the Proposed Project or alternatives.

4.12.1 Indicators

The Proposed Project would affect SMAs if it would:

- Restrict public access to SMAs or Wilderness Areas;
- Impact desert tortoise populations in nearby DWMAs;
- Cause changes in air quality or other air clarity evaluations that could occur within SMAs in the area due to construction and operation activities;
- Conflict with the visual resource management (VRM) classifications of SMAs in the area having VRM classifications; or
- Cause changes to the darkness of the night sky as viewed from SMAs in the area due to construction and operation activities.

4.12.2 Direct and Indirect Effects by Alternatives

This section describes effects under each alternative and defines the temporal scale (time), spatial extent (area), and intensity of effects for each alternative.

4.12.2.1 Proposed Project

The closest wilderness areas to the Proposed Project are the Mormon Mountain Wilderness area, located approximately 6.5 miles northeast, the Arrow Canyon Wilderness located 6 to 7 miles northeast, the Meadow Valley Range Wilderness located 13.6 miles northwest and the Muddy Mountains Wilderness located 21 miles southeast of the Proposed Project.

1. Restrict public access to Special Management Areas or Wilderness Areas

The Proposed Project is located on the Reservation and immediately adjacent areas not accessible to the general public. There are no roads associated with the Proposed Project that would provide new access to public lands. The Proposed Project would not restrict access by the public to SMAs or Wilderness Areas.

2. Impact desert tortoise populations in nearby DWMAs

Areas of Critical Environmental Concern (ACECs) are areas designated by BLM where special management attention is needed to protect and prevent irreparable damage to unique natural values, or to protect human life and safety from natural hazards (BLM 2009b). Natural values include, but are not limited to, historic, cultural, scenic, and wildlife resources.

The Arrow Canyon ACEC is located 5.5 miles to the northwest of the Proposed Project. The southern boundary of the 151,360-acre Mormon Mesa ACEC is located 5.6 miles northeast and 5.5 miles northwest of the Proposed Project. The Coyote Springs ACEC is located 13 miles to the west, the Virgin River ACEC is located 17.7 miles to the east of the Proposed Project, and the Gold Butte ACEC is located 18.8 miles to the east. Three of these ACECs (Mormon Mesa, Coyote Springs and Gold Butte) were established specifically for the management of desert tortoise habitat and recovery of the desert tortoise (BLM 1998). The Virgin River ACEC was established to protect Threatened or Endangered species habitat, riparian habitat, and cultural resources. The Arrow Canyon ACEC was established to protect paleontological, geological, and cultural resources.

The Project would not impact these locations and any needed desert tortoise relocation would take place within the Reservation.

3. Cause changes in air quality, conflict with visual resources or change the darkness of the night sky with respect to SMAs

The nearest SMA or similar natural area is approximately 5.5 miles from the Proposed Project. During construction off-site dust pollution would be minimized and controlled through implementation of a dust control plan. The remote location of the site and intervening topography limits visual impact from any SMAs. The construction of the Proposed Project would mostly take place during daylight hours and operational lighting would be minimal and directed in a downward manner to avoid light pollution. Therefore, the Proposed Project is not expected to have impact on the night sky or views from any SMAs.

4.12.2.2 Gen-Tie Alternative

The Gen-Tie Alternative would utilize the same solar site footprint as the Proposed Project and the same ROWs on BLM land. Therefore, this Alternative would result in similar impacts to SMAs as the Proposed Project.

4.12.2.3 Water Supply Alternative

The Water Supply Alternative would utilize the same solar site footprint as the Proposed Project and the same ROWs on BLM land. Therefore, this Alternative would result in similar impacts to SMAs as the Proposed Project.

4.12.2.4 No Action Alternative

Under this alternative, the Project would not be developed and there would be no effect on SMAs.

4.12.3 Residual Effects

There would be no residual effects to SMAs as a result of the Proposed Project or alternatives.

4.13 Visual Resources

This section discusses effects of the Proposed Project on visual resources that would result from implementation of the Proposed Project or alternatives.

4.13.1 Indicators

This assessment considered the regional visual character of the Project area, visual features of the Proposed Project, views of the Proposed Project from important vantage points, and changes in these views that would result from Proposed Project implementation.

The Proposed Project would affect visual resources if it would:

- Substantially degrade the existing visual quality of the site and its surroundings or the magnitude of change from the existing scenic quality of the landscape would be substantial;
- Impact areas with considerable public concern for scenic quality such as: recreational areas, natural areas, wilderness areas, wilderness study areas, wild and scenic rivers, scenic areas, scenic trails, and ACECs;
- Impact views from the Old Spanish National Historic Trail;

- Substantially damage scenic resources, including, but not limited to the view from major roadways; or
- Create a new source of substantial light or glare that would affect day or nighttime views in the area

Visual Simulations

A visual simulation was prepared for each key observation point (KOP) to depict the view of the Project from each location. In order to exhibit the potential worst-case visual impacts, simulations were prepared for the solar project using the single-axis tracking mounting system and with the panels tilted at their greatest angle as it would represent the potentially most visible condition (highest panel height) that could occur on the Project site.

To produce the simulations, a three-dimensional (3-D) model was developed for the horizontal tracker technologies and the gen-tie lines which were then superimposed on the digital elevation model (DEM) of the topography of the area. Each KOP was incorporated into the DEM to verify scale and viewpoint location and model renderings were combined with the high-resolution digital photographs.

As shown in the viewshed analysis and associated figures in Chapter 3, the Project would be visible from Highway 168 and Reservation Road where these roads cross the site. It could also be visible from I-15 but at significant distances

Figures 4-2 through **4-12** show the visual simulations for the Proposed Project from KOPs 1 through 11.

4.13.2 Direct and Indirect Effects by Alternatives

4.13.2.1 Proposed Project

The Proposed Project is located on terrain that is relatively flat. The Project would be visible from Highway 168 and Reservation Road with portions of the solar field located on both sides of these roads. Views of the Project from I-15 would be possible but only at significant distance. The dominant man-made visual features from Highway 168 and Reservation Road would be the solar field. Views of the Project from I-15 or the Old Spanish National Historic Trail include the other man-made features in the viewshed including the Reid-Gardner Power Plant and the multiple high voltage transmission lines ranging from 230kV to 500kV in size varying by viewpoint location.

The portion of the gen-tie on BLM-administered land is in close proximity to the Reid-Gardner Power Plant and the multiple high voltage transmission lines ranging from 230kV to 500kV that run through the area. The BLM lands that would be affected by the Project are designated as Class III and because of the high level of modification to the landscape in this area associated

with the Reid-Gardner Power Plant and associated infrastructure, Class IV may be more appropriate. However, the gen-tie would meet the Class III objectives that allow activities to attract attention but not dominate the view of the casual observer.

1. Substantially degrade the existing visual character or quality of the site and its surroundings

The Proposed Project's solar site is located on the Reservation and is not open to public access. Therefore, there is little, if any, use by the public. As described in **Section 3.13**, there were twelve KOPs identified in the Project area in consultation with the Tribe, BIA, BLM, and the NPS. KOPs 1 through 7 are located on the public travel routes in the vicinity of the Project including Highway 168 and Reservation Road. KOPs 8 through 11 are representative of views from the Congressionally-designated location of the Old Spanish National Historic Trail.

The solar field could be visible from approximately 2 miles of Highway 168 where it travels through the solar field across very flat topography. Views from portions of Highway 168 either east or west of this area would be blocked by intervening topography.

KOP 1 is located on Highway 168 on the eastern edge of the Project area. Parts of the solar field on both sides of the highway would be visible as shown in the visual simulation from this location (**Figure 4-2**).

KOP 2 is located on Highway 168 approximately 0.1 miles east of its intersection with Reservation Road. The solar field would also be visible on both sides of the highway as shown in the visual simulation from this location (**Figure 4-3**).

KOP 3 is located at the intersection of Highway 168 and Reservation Road looking down Reservation Road. The simulation of this view includes a berm on both sides of Reservation Road to screen views to travelers on this road as it is the entrance to the community on the Reservation. As shown in the visual simulation from this location (**Figure 4-4)**, the solar field would be visible on both sides of Reservation Road at the intersection but would not be visible as travelers proceeded southward into the community.

KOP 4 is located on Reservation Road just south of the intersection of Highway 168. The simulation of this view includes the berm described above to screen views to travelers on this road. As shown in the visual simulation from this location (**Figure 4-5**), the solar field would be mostly screened from view by the berm on both sides of Reservation Road.

KOP 5 is located on Reservation Road about 0.5 miles southwest of the intersection of Highway 168. This location is where vehicles traveling north from the community crest the hill and could see the solar field. The simulation of this view (**Figure 4-6**) shows that a small portion of the tops of some panels could be seen above the berm along Reservation Road from a high-profile vehicle such as an SUV or truck (as used for these simulations) and from this slightly elevated position on the road. This would occur only at the beginning or end of the day when the panels

are at their greatest height/angle. The solar field would be effectively screened from view by the berm in most cases.

KOP 6 is located on Highway 168 near the western edge of the Project area about 0.2 miles west of the intersection with Lyttle Lane. The solar field would be visible on both sides of the highway as shown in the visual simulation from this location (**Figure 4-7**). However, because of the set-back from the highway, the project would not dominate the view looking forward.

KOP 7 is located on Highway 168 on Highway 168 just east of the intersection with Lyttle Lane. This viewpoint shows that the solar field south of the highway would be visible because of the elevated topography in this portion of the field as shown in the visual simulation (**Figure 4-8**).

KOP 8 is located on the Old Spanish National Historic Trail about 2.4 miles southeast of the solar site. This location was selected because the visibility analysis indicated that it could be possible that the Project could be visible from this view. However, as shown in the visual simulation (**Figure 4-9**), the Project would not be seen from this location due to intervening topography.

KOP 9 is also located on the Old Spanish National Historic Trail where it crosses Hidden Valley Road about 2.3 miles southeast of the solar site. This location also was selected because the visibility analysis indicated that it could be possible that the Project could be visible from this view. As shown in the visual simulation (**Figure 4-10**), the solar field would not be seen from this location due to intervening topography. However, a section of the Project gen-tie could be seen in the center-left of the simulation just above the intermediate ridgeline. This would not be obvious to the viewer because of the several larger lines closer to this location.

KOP 10 is also located on the Old Spanish National Historic Trail about 2.2 miles southeast of the solar site. This location also was selected because the visibility analysis indicated that it could be possible that the Project could be visible from this view. The solar field would be visible from this location as a thin dark line at the top of the distant ridge in the center-right of the photo. In addition, the Project gen-tie could be seen in the center of the simulation (**Figure 4-11**) but this would not be obvious to the viewer because of the distance and several existing larger lines in this view.

KOP 11 is also located on the Old Spanish National Historic Trail and is representative of two locations about 2.3 miles southeast of the solar site. This location also was selected because the visibility analysis indicated that it could be possible that the Project could be visible from this view. However, as shown in the visual simulation (**Figure 4-12**), the Project would not be seen from this location due to intervening topography.

The Proposed Project is not adjacent to any national parks or residential communities. The tribal community approximately 0.5 miles south and west of the Project area is at a significantly lower elevation and the Project would not be visible from those locations. Although the site would be located near an interstate highway, the surrounding topography of the area would obstruct

views of the Proposed Project from most viewpoints within the surrounding area. The Project would be readily visible to travelers on State Highway 168 where it passes through the solar site. Therefore, development of the Proposed Project would not substantially degrade the existing visual character of the site and its surroundings.

2. Impact areas of public concern for scenic quality such as: recreational areas, natural areas, wilderness areas, wilderness study areas, wild and scenic rivers, scenic areas, scenic trails, and ACECs.

The Proposed Project site is located on the Reservation and is not used as a Nature Area, Wilderness Area or Wilderness Study Area, nor are there any Wild or Scenic Rivers in the area. The Arrow Canyon Mountain and Muddy Mountains Wilderness Areas are located in the area but the Project would not be readily discernible from these locations as shown by the viewshed analysis described in Chapter 3. The Arrow Canyon Mountain Wilderness is located in an area 6 to 15 miles north of the Proposed Project site where views are blocked by intervening topography. The Muddy Mountains Wilderness is located approximately 12 miles southeast of the site at which distance the Proposed Project would not be readily visible. Therefore, development of the Proposed Project would not have a substantial direct or indirect effect on areas of public concern for scenic quality.

The solar project could possibly be viewed from short segments of the Old Spanish National Historic Trail, but at distance of five to seven miles. The visual simulations prepared for KOPs 8 through 12 on the Old Spanish National Historic Trail confirm that the visual impact from the Proposed Project to the Trail would be minimal because of the distance and intervening topography.

3. Substantially damage scenic resources, including, but not limited to trees, rock outcroppings, and historic buildings within a state scenic highway.

There are no historic structures or historic buildings currently present on the Proposed Project site. The mountain ranges and rock outcroppings in the area and the surrounding viewshed would not be affected. As mentioned above, there are no designated scenic highways in the area nor is the Proposed Project visible from any scenic highway or byway.

4. Create a new source of substantial light or glare which would affect day or nighttime views in the area.

Light. The Proposed Project is located on the Reservation and adjacent to BLM lands. There is currently no source of light or glare within the Proposed Project footprint. Lighting could be used during construction if needed. During operations, sources of light would be located on the solar site primarily in the area of the O&M building or power block area. Lighting would be designed to provide the minimum illumination needed to achieve safety and security objectives and would be downward-facing and shielded to focus illumination on the desired areas only. Therefore, the Proposed Project is not anticipated to create a new source of substantial light

which would adversely affect day or nighttime views in the area and would not impact users of the area (e.g., campers, stargazers, and recreational users of the desert).

Glare. PV modules are designed to absorb as much light as possible to maximize efficiency. In addition, PV modules generally use anti-reflective coatings to decrease reflection and increase conversion efficiency. The time and duration of any potential reflections from the panels are determined by the orientation of the panels and the position of the observer in relation to those panels. All PV solar projects, regardless of the type of mounting structure, orient the panels as close to perpendicular and as much time as possible to maximize solar absorption and energy output. This results in the panels being oriented towards the sun as much as possible throughout the day and the course of the year as the position of the sun changes in the sky. This orientation towards the sun results in the portion of incoming light that is reflected to be directed back into the sky.

The amount of light reflected upwards would not be expected to potentially affect the training done at NAFB or other air traffic in the area. Two factors are relevant to the intensity of reflected light – the amount reflected and the distance from the source. Only 2 to 10 percent of ambient light is reflected by PV solar panels (Newton, 2007) and the index of refraction for the glass that covers most panels is generally the same as the windshield of a car. Therefore, the intensity of the reflected light would be low. Also, light intensity decreases with distance from the source (according to the inverse square law of light intensity where intensity is equal to the inverse square of the distance or $I = 1/d^2$). For example, each time distance is doubled from the source, the light intensity is decreased to one-quarter of its original value ($1/2^2$). Therefore, the intensity of light reflected from the PV solar panels at locations any distance from the source would be a small fraction of the original intensity at the point of reflection. Thus, any reflected light from the PV panels would be very low. Any viewers who could see the low intensity reflected light would also be exposed to significantly brighter ambient light.

The Proposed Project would not use materials such as fiberglass, or vinyl/plastic siding and brightly painted steel roofs, which have the potential to create on-and off-site glare. Therefore, future development of the project site is not anticipated to create a significant new source of glare that would adversely affect day or nighttime views in the area.

4.13.2.2 Gen-Tie Alternative

Effects to visual resources resulting from implementation of this alternative would be similar to those identified for the Proposed Project. The same solar site would be graded and developed and the same BMPs would be employed as mitigation as for the Proposed Project. This gen-tie alternative would be located on similar land forms and would utilize the same structure types, materials, construction methods, and mitigation as the proposed gen-tie. While this route alternative would be slightly shorter, visual impacts from the portion of the gen-tie on the Reservation would be approximately the same as the proposed gen-tie because it also would be located in an area where there are multiple existing and larger transmission lines. The portion of

the line on BLM-administered lands and private lands would be the same as the proposed gen-tie.

4.13.2.3 Water Supply Alternative

The visual impacts of this alternative would be the same as the Proposed Action as the project footprint and all project components would be the same.

4.13.2.4 No Action Alternative

Under this alternative, the Project would not be developed so there would be no impact to visual resources.

4.13.3 Residual Effects

As included in the project description, the gen-tie lines would be constructed using no specular materials as appropriate. In addition, disturbed areas would be restored after construction is complete which would minimize the contrast between the disturbed areas and the surrounding native areas. No additional mitigation measures are proposed. Therefore, the residual impacts would be the same as the impacts described above.

4.14 Public Health and Safety

This section discusses effects on human health and safety due to exposure to or creation of hazards that may occur with implementation of the Proposed Project or alternatives.

4.14.1 Indicators

Significant effects to health and safety would occur if the Proposed Project would:

- Use, store, or dispose of petroleum products and/or hazardous materials in a manner that results in a release to the aquatic or terrestrial environment in an amount equal to or greater than the reportable quantity for that material or creates a substantial risk to human health;
- Mobilize contaminants currently existing in the soil or groundwater, creating potential pathways of exposure to humans or wildlife that would result in exposure to contaminants at levels that would be expected to be harmful;
- Expose workers to contaminated or hazardous materials at levels in excess of those permitted by the Federal Occupational Safety and Health Administration (OSHA) in 29 CFR §1910, or expose members of the public to direct or indirect contact with hazardous materials from the Proposed Project's construction or operations; or

- Expose people residing or working in the Proposed Project vicinity or structures to safety hazards and/or a significant risk of loss, injury, or death.

4.14.2 Direct and Indirect Effects by Alternatives

Analysis of direct and indirect effects focuses on potential effects on public safety due to exposure of the general public, workers, and the environment to hazards and hazardous materials.

The primary mechanisms of potential exposure to human health and safety hazards include improper handling or transport of hazardous materials, inadvertent spills or releases, soil or groundwater disturbance on sites with known and unknown contamination, and electrical and fire hazard.

4.14.2.1 Proposed Project

Construction and operation activities of the Proposed Project would take place mostly on the Reservation with the gen-tie on BLM land.

The Applicant would be required by EPA regulations to develop a SWPPP to mitigate potential soil erosion and assist with the management and protection of water resources throughout construction and the operational life of the Proposed Project. The Applicant would also develop a Spill Prevention and Emergency Response Plan to reduce the risk of releases of oil and hazardous substances to the environment during operations. In addition, the following Plans would also be developed and followed to minimize risk and exposure to on-site staff, delivery personnel, and construction workers. There are no nearby residents and the nearest community is approximately 0.5 miles south of the Proposed Project and should not be at risk.

General Design and Construction Standards. The Applicant would design the Proposed Project in accordance with Federal and industrial standards including the American Society of Mechanical Engineers (ASME), National Electrical Safety Code (NESC), International Energy Conservation Code (IECC), International Building Code (IBC), Uniform Plumbing Code (UPC), Uniform Mechanical Code (UMC), the National Fire Protection Association (NFPA) standards, and OSHA regulations.

The Applicant would also comply with Federal regulations and industrial standards for activities mentioned above as they pertain to construction, as well as with applicable state and tribal codes. Local Clark County code would be considered by the Applicant on portions of the Proposed Project managed by or on BLM lands and could include meeting road specifications for Clark County.

Health and Safety Program. The Applicant would require all employees and contractors to adhere to appropriate health and safety plans and emergency response plans. In addition, all

construction and operation contractors would be required to operate under a health and safety program written and administered by the EPC contractor and that meets industry standards. All contractors would be required to maintain and carry health and safety materials including the MSDS of hazardous materials used on-site.

Spill Prevention and Emergency Response Plan. The Applicant would prepare an Spill Prevention and Emergency Response Plan based on results of a comprehensive facility hazard analysis. In addition, specific response plans would be prepared for each identified hazard. Emergencies might include brush or equipment fires, transformer oil leaks or spills, back-up generator leaks, attempted acts of sabotage, and airplane crashes. The Emergency Response Plan would assign roles and actions for on-site personnel and responders and would designate assembly areas and response actions.

Hazardous Materials and Waste Management Plan. The Applicant would prepare a Hazardous Waste Management Plan that would describe the storage, transportation, disposal, and handling of hazardous materials and wastes and would emphasize recycling of wastes where possible. The Applicant would manage hazardous wastes in accordance with the Resource Conservation and Recovery Act (RCRA) (42 U.S.C. 6901, et seq. and RCRA's implementing regulations at 40 CFR 260, et seq.) and other applicable state and tribal regulations.

The program would identify types of hazardous materials to be used during construction and operations activities. A MSDS document control program shall be included within the Hazardous Materials program to provide the necessary information on all chemicals stored and used on site. All personnel would be provided with project-specific training. This program would be developed to ensure that all hazardous materials are handled in a safe and environmentally sound manner. Employees would receive hazardous materials training and would be trained in: hazardous waste procedures; spill contingencies; and waste minimization procedures in accordance with OSHA Hazard Communication.

1. Use, store, or dispose of petroleum products and/or hazardous materials in a manner that results in a release to the aquatic or terrestrial environment in an amount equal to or greater than the reportable quantity for that material or creates a substantial risk to human health

During construction, operation and decommissioning on-site, delivery and off-site personnel could experience human health impacts as related to hazardous materials handling and spills.

Construction. The Proposed Project's construction activities would occur within fenced solar site and along the proposed ROWs. Potential human health and safety effects could occur from the use, transport, and disposal of hazardous materials during the construction process. The hazardous materials that may be used include gasoline, diesel fuel, oil, hydraulic fuels and lubricants, paints, solvents, adhesives, batteries, welding materials, and transformer oil.

Localized spills and leaks could occur which could result in exposure to human or local wildlife. Construction personnel would be trained in the handling and storage of hazardous materials in

compliance with OSHA standards. The Spill Prevention and Emergency Response Plan would address hazardous materials management during Proposed Project construction and would include a hazardous material inventory, emergency response procedures, training program information, and basic information on the location, type, quantity, and health risks of hazardous materials stored, used, or disposed. Therefore, the potential risk to people or the environment during construction would be minor.

Operations and Maintenance. The O&M of the Proposed Project would also require the periodic use and transport of hazardous materials, hydraulic fluid, welding gases, pesticides and herbicides. Localized spills or releases of these hazardous materials could occur due to improper handling or storage or inadvertent release. Like construction, the potential risks to human health and the environment associated with the handling, storage, or releases of these materials would be minimized by the implementation of the required Spill Prevention and Emergency Response Plan, health and safety program, designs incorporating secondary containment, and Hazardous Materials and Waste Management plan.

Decommissioning. Decommissioning of the Proposed Project components could occur at the end of the Project's expected life of 30 years or more. Closure activities would have similar effects to human health and safety as construction activities and would involve demolition of structures, removal of transmission poles and all electrical components, as well as closure of wastewater facilities and the septic system. The Applicant would develop a Project Restoration Plan for temporarily disturbed areas after construction and a Decommissioning and Site Reclamation Plan for site closure activities to reduce impacts to human health and safety. Any project components that are not recycled would be disposed of in compliance with all applicable Federal, state, and local laws.

2. Expose human or ecological receptors to potentially hazardous levels of chemicals or explosives due to the disturbance or unearthing of contaminated soils or groundwater.

The Proposed Project is located on vacant land with no evidence of previous commercial or agricultural activity. Currently there is no evidence to suggest that on-site soils or groundwater are contaminated so neither human nor ecological receptors would be exposed to potentially hazardous materials exposed during construction, O&M or decommissioning activities.

3. Expose workers to contaminated or hazardous materials at levels in excess of those permitted by the Federal Occupational Safety and Health Administration (OSHA), or expose members of the public to direct or indirect contact with hazardous materials from the Proposed Project construction, operations or decommissioning.

Construction, O&M, and decommissioning activities could temporarily expose workers to direct or indirect contact with hazardous materials. Workers who would handle hazardous materials are required under OSHA regulations to have a minimum level of training. The Applicant and/or contractors would implement a Health & Safety Program that would require all employees and

contract staff to adhere to the appropriate health and safety plans and emergency response plans that meet industry standards.

4. Expose people or structures to a risk of loss, injury, or death involving electrocution or excessive exposure to wildland fires, including where wildlands are adjacent to urbanized areas.

Construction. During construction, the Proposed Project activities and related equipment could expose people to an increased risk of injury or death as a result of electrocution or exposure to wildland fires. The Proposed Project is a remote area, located approximately two miles from the nearest residential/urban area. The threat of harm or loss to structures is low. The Community Hazard Assessment conducted by Clark County listed Moapa Town as having “Moderate Fire Hazard” based on potential for strong fire behavior, limited water, and limited fire suppression resources.

Sources of fire at the Proposed Project includes combustion of wildland fuels from smoking, refueling, and operating vehicles and other equipment off designated roadways. A fire management plan would be developed for both those portions of the Project on Reservation and BLM lands to outline all activities undertaken to minimize potential fire risk. The Project ROWs would be constructed in proximity to natural gas pipelines in some locations and potential fire and explosion risks would be mitigated by close coordination with pipeline company personnel during Project design and construction.

Construction of the Proposed Project could also expose workers to potential electrocution hazards. All electric system and components would be developed in compliance with the National Electric Code (NEC) and NESC, as well as other industrial safety standards, including OSHA.

Operation and Maintenance. O&M of the Proposed Project would increase the potential for additional incidents related to fire and fire safety. Petroleum products would be the main flammable substances to be used during Proposed Project operations. Potential fire hazards could also result from electrical arcing and sparking from exposed wiring. The fire risk would be low on the solar site because site vegetation would be maintained below 12-inches. In addition, the facility would also incorporate a fire suppression system that would include a water tank dedicated to fire suppression.

O&M of the Proposed Project would also expose workers to potential electrocution hazards from the electrically energized equipment. The proposed electrical system would be designed and built to NEC and other Federal specifications and protective measures and equipment for employees working directly with or near electrical equipment would be implemented.

Decommissioning. Decommissioning of the Proposed Project would involve similar risks of fire as the construction phase. Electrical equipment would not pose a fire or electrocution risk during decommissioning as they would not be energized. Fire risks during decommissioning would be minimized by the implementation of the same plans discussed for construction.

4.13.2.2 Gen-Tie Alternative

Potential human health and safety effects resulting from implementation of this alternative would be the same as those identified for the Proposed Project. The same solar site disturbance would occur and the same BMPs would be employed as mitigation as for the Proposed Project. While this route alternative would be slightly shorter, it would utilize the same materials, construction methods, and mitigation as the proposed gen-tie. The portion of the line on BLM-administered lands and private lands would be the same as the proposed gen-tie.

4.14.2.3 Water Supply Alternative

Potential human health and safety effects that would result from the construction, operation, and decommissioning of this Alternative would be the same as those identified for the Proposed Project. Project components would be located within the same footprint and the same ROWs and expected construction and operations would be the same.

4.14.2.4 No Action Alternative

Under this alternative, the Proposed Project would not be constructed and no project-related effects on human health and the environment would occur.

4.14.3 Residual Effects

With proper implementation of the Applicant's design features and plans for prevention, management, and response to potential hazards, no residual effects due to exposure of human or ecological receptors to hazards and hazardous materials are anticipated.

4.15 Cumulative Impacts

This section analyzes cumulative impacts of the Proposed Project in conjunction with other developments that affect or could affect the area. Under NEPA, a cumulative impact is the impact on the environment that results from the incremental impact of the project when added to other past, present, and reasonably foreseeable future actions (40 CFR Section 1508.7). In order to facilitate the cumulative analysis, a cumulative scenario has been developed that identifies and evaluates projects that already exist within the vicinity of the Proposed Project, that are reasonably foreseeable, or would be constructed or commence operation during the timeframe of activity associated with the Proposed Project.

4.15.1 Cumulative Projects

The cumulative scenario includes projects within the same geographic and temporal scope as the Proposed Project. For the purpose of this study, the geographic scope for cumulative effects has been defined as within portions of the Muddy River and California Wash watersheds within five miles of the Proposed Project for physical and biological resources (soils/geology. water resources, air quality, wildlife, vegetation, cultural resources) and within the local community or county for socioeconomic impacts (employment, income, services, resource use patterns, etc.). The Tribe and BLM have full authority to regulate any current or foreseeable projects that take place within the Reservation or BLM-managed land respectively, so are able to manage local cumulative impacts.

As with the geographic scope of the cumulative analyses, the temporal scope of each analysis varies by resource area. For this analysis, the temporal scale has been limited to projects constructed within the last 5 years to projects that may be constructed within the next 10 years according to Tribe and BLM sources.

The cumulative scenario includes all renewable energy projects, transportation projects, infrastructure improvement projects, pipeline and electric transmission projects, and other projects that meet the following criteria:

- Projects that are closely-related and completed past projects;
- Projects approved and under construction;
- Projects approved but not yet under construction; and
- Projects that have been proposed but not approved.

Projects are included in this cumulative analysis if information on the project was listed in the Programmatic FEIS for the Dry Lake SEZ, the EA for the Playa Solar Project, identified during agency scoping, identified in the 2014 Moapa Solar Energy Center FEIS, or provided in consultation with the BLM, BIA and the Tribe. **Table 4-11** contains a list of projects that could potentially occur within the area surrounding the Proposed Project. This cumulative effects section evaluated the past, pending and current/future projects presented in this table and some of these projects are evaluated in the sections below.

4.15.2 Cumulative Impacts by Resource

This section analyzes cumulative impacts of the Proposed Project combined with other proposed projects or developments that would affect or potentially affect the area.

The cumulative effect of the Proposed Project was not analyzed for resources where it was determined that the Proposed Project would have little to no contributing impact before and after mitigation. If the Proposed Project or action alternatives were not built (the No Action Alternative), there would be no contribution to cumulative effects by the Proposed Project.

4.15.4.1 Geology, Topography and Geologic Hazards

The Proposed Project would not have impacts to geologic units, topography, or geologic hazards outside of the Proposed Project area and, therefore, would not contribute to cumulative impacts to geology and topography.

4.15.4.2 Soils

Ongoing and foreseeable development throughout the cumulative effects area would have an impact upon soil resources. The other current or proposed projects in the area could overlap in the construction period for the proposed Project during which time soil impacts would be the greatest.

Construction of the Proposed Project would involve disturbing 672 acres associated with the solar site and the associated Project ROWs. Erosion could occur in these areas due to the removal of vegetation and soil exposure. The Applicant would implement a SWPPP to minimize soil erosion during construction and a Project Restoration Plan to revegetate disturbed areas following construction.

All other proposed and foreseeable construction projects in the cumulative effects area for soils would also be required to implement similar control measures under the NPDES program and implement BMPs similar to the Proposed Project to prevent erosion. However, the acreage affected by the other foreseeable projects would contribute to an overall cumulative impact to soil resources over the life of the Proposed Project. The timing of these projects and implementation of appropriate BMPs could lessen some of the cumulative and localized impacts within the area.

All of the Action Alternatives would produce similar cumulative impacts as the Proposed Project because they would occur on the same site and would utilize the same or very similar ROWs.

4.15.4.3 Water Resources

This section describes cumulative effects on water resources that could occur with implementation of the Proposed Project along with other potential proposed projects in the area. The proposed solar site does not contain or drain to any wild and scenic river and has limited potentially Section 404 jurisdictional water, nor any FEMA 100-year flood zone on-site, although the gen-tie lines would cross a 100-year flood zone located on BLM lands and some jurisdictional waters. Therefore, cumulative effects would mainly be focused on groundwater quantity and quality.

Over time, the amount of water available regionally could be affected by climate change. The Nevada Climate Change Advisory Committee (NCCAC) Final Report (2008) indicates that the

Colorado River basin could see less precipitation overall with a greater percentage of precipitation coming in the form of rain instead of snow. As the Las Vegas Valley receives over 90 percent of its drinking water from the Colorado River, this could present challenges to the municipal water supply. Additionally, western Nevada receives most of its water from upstream storage in Sierra Nevada rivers, which also face the same challenges of decreased precipitation with a greater percentage of that precipitation coming from rain. In both the Rocky Mountains and the Sierra Nevada Mountains, the melting season could grow shorter, with earlier spring snowmelt leading to increased spring runoff and decreased summer stream flow. Decreased stream flow in the summer could have an impact on the habitat of aquatic animals.

In addition, while the general area is largely undeveloped currently, a number of existing and proposed energy projects occur there. Ongoing and foreseeable development throughout the cumulative effects area would use groundwater and have potential for groundwater impacts.

The Proposed Project would use up to 500 AF of surface water from the Muddy River during the 12 to 15 month construction period. It would use up to 5 AFY of water during its proposed 30-year operation but this would come from a supplier with an existing water pipeline that crosses the Project area. Therefore, the Proposed Project would not contribute cumulatively to groundwater consumption and use in the area. However, if the Water Supply Alternative is implemented, the Project would get the 500 AF of water needed for construction from groundwater. This relatively small amount and the short duration of use are not expected to contribute appreciably to regional groundwater consumption over time.

4.15.4.4 Air Quality and Climate

Air quality impacts resulting from the Proposed Project would occur within the California Wash (HA 218) and the Lower Meadow Valley Wash (HA 205). The operational phase of the Proposed Project would have minimal emissions of regulated air pollutants so this cumulative impact discussion would focus on the impacts associated with the construction phase. All effects on climate change caused by the release of GHG emissions are cumulative by nature and GHG emissions related to the Proposed Project are minimal. Operation of the proposed solar plants would offset electricity from fossil fuel energy projects and would be a net positive effect on GHG emissions and would, therefore not contribute negatively to cumulative GHG emissions.

The Proposed Project is located in an area designated as attainment for all criteria pollutants. The Proposed Project would result in daily emissions of CO, PM_{10}, NO_x and VOC during construction. If the Proposed Project were constructed during the same time period as either of the other proposed projects in the area, construction would potentially result in short-term, localized, and unavoidable impacts to air quality. However, no cumulative impacts are anticipated to occur at levels above existing air quality standards or at levels that would prevent the area from achieving attainment status.

Due to current decommissioning of the Reid Gardner Power Plant, cumulative short term effects from the Proposed Project during the construction period are assumed to be minimal and long term effects negligible.

4.15.4.5 Noise

Noise associated with equipment used to construct and operate the Proposed Project and each of the cumulative projects is unlikely to contribute cumulatively to one other because of the distance between each proposed project and the distance to the nearest sensitive receivers. However, the increase in traffic volumes along highways and local roads from the construction and operation of multiple projects could cause an increase in the cumulative noise levels along the highways.

4.15.4.6 Biological Resources

Many of the cumulative projects would affect the same types of Mojave Desert scrub/shrub vegetation as well as sensitive wildlife species within this region and habitat. The nature of the cumulative conditions can be separated into long-term effects and temporary and short-term effects. Proposed solar projects would result in relatively long-term loss of over thousands of acres of vegetation and habitat for a variety of wildlife species including the desert tortoise. The linear pipeline and electric transmission projects would have a short-term effect on vegetation during the construction phase but would be allowed to re-vegetate or be restored and species such as desert tortoise would be able to reutilize the area for habitat and burrows. Use of the existing utility and transportation corridors for access and transmission focuses the impacts to previously impacted areas. Some of the anticipated projects described in **Table 4-11** would also potentially impact desert tortoise habitat.. To mitigate any direct effects or potential cumulative effects, the Proposed Project and other cumulative projects would develop and implement desert tortoise mitigation plans in consultation with the USFWS. These mitigation measures would reduce the impacts that cumulative projects would have upon the desert tortoise.

Long-term impacts to yucca and cacti species would occur as a result of cumulative effects of multiple projects. The BLM also manages sensitive species as part of their review of the ROW agreement for transmission, pipelines, and utility roads within the existing utility corridor as well as large-scale projects on BLM lands. Mitigation measures would ensure that only minimal cumulative impacts to native vegetation would occur as a result of the current and foreseeable projects. No federally threatened or endangered plant species were found within the Proposed Project or along proposed road or transmission lines. As a result, it is highly unlikely that there would be a cumulative impact to threatened, endangered, or BLM sensitive plant species.

The Proposed Project would result in impacts on special status species that could result in cumulative impacts in conjunction with similar impacts from future projects. Impacts would include noise and increased human/vehicle presence during construction, operations, and

maintenance, all of which could disrupt normal behavior patterns and may cause direct injury and/or mortality. Species potentially affected would include special status reptile and bird species with the potential for significant impacts to the desert tortoise.

Many of the cumulative projects would affect suitable foraging habitat for golden eagles. Loss of foraging habitat could impact foraging behaviors of the golden eagle, which could cause adverse impacts to the fitness of golden eagle populations within the known nesting grounds of Arrowhead Canyon. The proposed and existing transmission lines would be located near one another in or near the utility corridor. The existing lines have been in place for many years and golden eagle foraging flight patterns have most likely adapted to their presence. To mitigate any direct effects or potential cumulative effects, the Proposed Project and other cumulative projects would develop and implement a Bird and Bat Conservation Strategy. These mitigation measures would reduce the impacts that cumulative projects would have upon the golden eagle, although foraging habitat would still be lost.

4.15.4.7 Cultural Resources

Disturbance and/or loss of other unidentified sites or artifacts resulting from the implementation of the Proposed Project, when added to other existing or reasonably foreseeable actions in the Project area, could add to the cumulative loss of information about our heritage in area and in the region if these sites or resources are not identified and inventoried prior to disturbance.

The Proposed Project could contribute to cumulative impacts to cultural resources because there could be potential impacts to NHRP-eligible resources. Potentially eligible historic and cultural properties and archaeological resources are documented in the Proposed Project area. Also, it was concluded that the Proposed Project would not affect the viewshed from the designated location of the Old Spanish National Historic Trail.

Past and present developments in the vicinity of the Proposed Project include the transportation corridors such as State Highway 168, I-15, and the Union Pacific Railroad. The existing Reid-Gardner Power Plant to the south and the associated utility corridors have also contributed to disturbance in the area. Reasonably-foreseeable developments in the general area of the Proposed Project include other potential solar projects and their associated utility lines and electric substations.

The Proposed Project would adversely affect eligible historic properties. Mitigation of impacts to these properties would be addressed in an MOA developed between the Tribe, BIA, BLM, and SHPO. Therefore, impacts to cultural resources resulting from the Proposed Project would not be expected to contribute to cumulative impacts to cultural resources. Likewise, the other cumulative projects that would be under BLM, BIA, or other federal jurisdiction would also be subject to the same Section 106 requirements that would require similar mitigation and impact minimization.

4.15.4.8 Socioeconomics

The socioeconomic impacts from the Proposed Project would be limited to the local and regional area (county) surrounding and including the Reservation and Las Vegas. The Proposed Project would have short-term and long-term beneficial impacts during construction, O&M, and decommissioning activities.

For the purpose of this analysis, all current and foreseeable projects are included since they would also contribute short-term and potentially long-term beneficial cumulative impacts to employment, housing, and local/regional tax base and sales. The type of proposed projects (renewable energy and corridor construction projects) would have a specific short-term socioeconomic impact as large numbers of employees would be needed during construction and a much smaller number for O&M of the facilities.

Most employees would come from the current employment pool including tribal members and those with specific renewable energy, pipeline, and electric transmission expertise also from other regions of the country. Local employment would result in local spending while employment from outside the area would boost hotel occupancy. The projects would also use local resources, materials, and commodities from local suppliers during construction having a short-term effect. The Tribe would benefit from use of their Travel Plaza for fuel, food and other supplies. The local community would benefit from clean energy projects and reduce the need for fossil fuel power plants.

Concurrent construction of the foreseeable projects would result in a beneficial, cumulative impact on the local and regional economy and could decrease unemployment during the periods of construction.

4.15.4.9 Resource Use Patterns

Cumulative impacts to Resource Use Patterns are not analyzed because the Proposed Project would result in no resource use impacts and, therefore, would not contribute to cumulative impacts to resource use.

4.15.4.10 Transportation/Motorized Vehicle Access

The Proposed Project would potentially impact traffic and transportation systems by increasing the volume of traffic during the construction phase of the project. Because impacts to traffic and transportation would result primarily from construction-related activities, cumulative impacts would be limited to cumulative projects that would have concurrent construction schedules.

Most local roads in the cumulative effects area are infrequently used and would not be adversely affected by a temporary increase in road traffic. Construction of the cumulative projects would increase use of I-15 and during certain periods, when these projects would have

overlapping schedules, these additional vehicle trips could impact traffic flow on I-15 and associated on/off-ramps. After exiting I-15, vehicles would access each of the cumulative project areas using local arterial roadways including Highway 168. Traffic on these local roads is currently acceptable and the addition of vehicle trips from Proposed Project and cumulative projects would not be expected to adversely affect traffic flow during peak construction.

4.15.4.11 Special Management Areas

Cumulative impacts to Special Management Areas were not analyzed because the Proposed Project would not impact any SMAs, National Preserves, Parks, or Wilderness Areas and would not contribute to cumulative effects.

4.15.4.12 Visual Resource

Cumulative impacts to visual resources could occur if multiple projects are developed in the same viewshed and significantly changes the natural surroundings. The terrain of the Project area is relatively flat with the Arrow Canyon Range Mountains in the background. Vegetation is primarily desert scrub/shrub and the area surrounding the Proposed Project in all directions can be described as industrialized open desert land. Many electric transmission lines and pipelines traverse the area and the Reid-Gardener Power Plant and electric substations are visible throughout the area. Highway 168, I-15, and the UP railroad are also obvious man-made features in the area.

Planned development for the area that would have cumulative effects on visual resources would be confined to aboveground features such as solar projects and electric transmission lines. Other projects such as pipelines would have a short-term cumulative effect if construction took place at the same time as other foreseeable projects, but over the long term would not add to cumulative visual effects.

Renewable energy projects (solar) within the Reservation and the foreseeable transmission line projects within the adjacent BLM lands would have weak-to-moderate cumulative effects on viewshed. Given the presence of the Reid-Gardner Power Plant and high number of existing transmission lines currently within the Proposed Project area, proposed and future lines would likely blend together from most viewpoints and seemingly look like a single industrial corridor as is the goal for grouping linear projects. The other solar projects in the region would not be located near the Proposed Project and would not be seen within the same viewshed as the Proposed Project from any vantage point.

Construction impacts to visual resources from the cumulative projects would be similar to the Proposed Project. Large machinery, vehicles, and fugitive dust could impair the viewshed if projects were constructed at the same time. Actual impacts from the Proposed Project would be minimized given its location and inability to see the site from most viewpoints. If not constructed

concurrently with the other foreseeable projects, cumulative impacts to visual resources from construction would be minimal and temporary.

4.15.4.13 Public Health and Safety

Impacts to hazards and hazardous materials caused by the Proposed Project would be limited to the Proposed Project site and land directly adjacent to the site because impacts would result only from incidents associated with hazardous materials during construction or maintenance activities. Cumulative impacts could occur during construction and operation and would be limited to the areas of concurrent construction or maintenance.

The Proposed Project would only contribute to hazardous cumulative effects if substantial spills occurred at the same time and in the same locality as the current or foreseeable projects. Given the site-specific and linear nature of the foreseeable proposed projects, it is highly unlikely that the Proposed Project would contribute to cumulative effects to public health and safety. All projects would be required to follow regulatory procedures outlined in Spill Prevention and Emergency Response Plan, SWPPP, and Hazardous Materials Waste Management Plan to prevent, contain, and clean up hazardous spills.

Fire hazards would be associated more with the construction phase of the Proposed and foreseeable projects. A cumulative risk would occur only if multiple projects were under construction at the same time and the likelihood of multiple project construction overlapping in the immediate area would be low. A Fire Management Plan would be required for all cumulative projects on Reservation and BLM lands, thereby reducing the potential cumulative fire hazard.

4.16 Unavoidable Adverse Impacts

The following section describes the unavoidable adverse impacts that would occur as a result of the construction, O&M, and decommissioning activities associated with the Proposed Project. This section also includes a discussion of the irreversible and irretrievable commitments of resources associated with the Proposed Project.

4.16.1 Air Quality and Climate

Construction, operational, and decommissioning activities would result in unavoidable adverse impacts on air quality. However, these impacts are anticipated to be below thresholds that define any noticeable change to air quality or the local/regional climate. Exhaust and fugitive dust emissions from construction equipment and mobile sources would increase ambient concentration of regulated air pollutants and fugitive dust would be generated following disturbances by construction activities.

GHG emissions associated with the Proposed Project would be small and the Proposed Project would be consistent with the state's goals of reducing GHG emissions. Generation of renewable

electricity through solar power would have long-term air quality benefits by replacing forms of electricity production having much higher levels of air pollutant and GHG emissions.

4.16.2 Soil

The Proposed Project would impact soils during construction and O&M activities. Soil impacts could also occur from petroleum and other hazardous material spills. The application of erosion control measures, Stormwater Pollution Prevention (SWPP) and Spill Prevention and the Spill Prevention and Emergency Response Plan would mitigate these impacts. Impacted soils would be reclaimed following construction and decommissioning but any loss in productivity would be considered an Irreversible and irretrievable impact on soil resources and an unavoidable adverse impact.

4.16.3 Water Resources/Hydrology

As discussed in **Section 4.5**, changes in drainage patterns may increase erosion and sediment flow. However, due to the fact that BMPs would be implemented, the risk of flooding at the site or downstream would be negligible. The Proposed Project would also temporarily withdraw water for construction activities from the Muddy River on the Reservation.

Irreversible and irretrievable contamination of water could occur as a result of the Proposed Project, but implementation of BMPs described in the Spill Response and Emergency Response Plan would make it unlikely.

4.16.4 Noise

As discussed in **Section 4.7** the nearest local sensitive human receptors are approximately 0.5 miles from the project boundary. There are no local noise ordinances within the Proposed Project area. There would not be unavoidable adverse impact or irretrievable or irreversible commitment of this resource.

4.16.5 Biological Resources

Loss of 591 acres of habitat by implementing the Proposed Project would result in an unavoidable adverse impact for the life of the project. However, this number of acres of lost habitat would be a very small percentage of available habitat in the area. Therefore, this loss of native vegetation would not be expected to cause an irreversible and irretrievable commitment of the resource on a regional basis.

Localized and long-term, unavoidable, adverse impacts on wildlife, including special status species, would occur. Impacts to cacti and yucca species and desert tortoise on-site would be considered irreversible and irretrievable commitment of the resource.

4.16.6 Cultural Resources

Construction of the Proposed Project could potentially affect properties eligible for listing on the NRHP. Any loss or damage these resources could potentially be substantial. However, such losses are not expected because appropriate mitigation measures would be implemented. The proposed recovery of data at sites affected by the project would remove the artifacts from their current location. Also, in the event that ground disturbance causes the inadvertent discovery of previously unidentified subsurface cultural resources, these would be managed based on guidance from the appropriate agency and the Tribe. Therefore, there would be irreversible impacts to cultural resources associated with the proposed data recovery efforts but no irretrievable impacts to cultural resources are anticipated.

4.16.7 Social and Economic Conditions

The Project is expected to create up to 700 to 800 construction jobs for a period of up to 15 months. After the Proposed Project is commissioned, up to 5 staff would be required to operate and maintain the facility and provide plant security. This employment would have a beneficial impact on the local economy. The Proposed Project would increase local spending which would have a beneficial effect. Therefore, there would be no irreversible and irretrievable commitments of the economic resources.

4.16.8 Environmental Justice

As discussed above, it is anticipated that the Proposed Project would have a positive effect on the local population including members of the Tribe by creating both temporary and long-term jobs and revenues. No unavoidable adverse impacts or irreversible and irretrievable commitments of resources are expected.

4.16.9 Resource Use Patterns

The Proposed Project would limit future use of 591 acres of the Reservation and nearby BLM lands for other uses for the life of the Proposed Project. This would irreversibly and irretrievably commit the land resource to this use.

4.16.10 Energy and Minerals

There are no active mines or surface quarries within 5 miles of the Proposed Project. The Tribe has no future plans for mining within the Proposed Project. Therefore, no unavoidable adverse impacts or irreversible and irreversible commitments of energy and mineral resources are expected.

4.16.11 Transportation/Motorized Vehicle Access

Construction of the Proposed Project would result in short-term increases in the use of I-15 and local arterial roadways for the duration of construction. This would result in a short-term increase in traffic volume of up to 2,600 vehicle trips per day. The Proposed Project would not cause a change in the level of service for the affected roads and would not cause a permanent irreversible and irretrievable commitment of the resource.

4.16.12 Special Management Areas

The closest wilderness areas to the Proposed Project are the Mormon Mountain Wilderness area, located approximately 6.5 miles northeast, the Arrow Canyon Wilderness located 6 to 7 miles northeast, the Meadow Valley Range Wilderness located 13.6 miles northwest and the Muddy Mountains Wilderness located 21 miles southeast of the Proposed Project.. No SMAs or LWCs would be directly or indirectly affected by the Proposed Project, and no irretrievable and irreversible commitment of resources would occur.

4.16.13 Visual Resources

The Project could be seen from Highway 168 but only from locations on I-15 at significant distance. Views of the Project from Reservation Road would primarily be screened from view by the proposed berms on each side of the road. The dominant man-made visual feature would be the solar field on the solar site and the gen-tie line. Views of the Project area from I-15 or the Old Spanish National Historic Trail include the other man-made features in the viewshed including the Reid-Gardner Power Plant and multiple high voltage transmission lines ranging from 230kV to 500kV in size and substations / power plants varying by viewpoint location. Construction of the Proposed Project would cause unavoidable, short-term and long-term, adverse impacts on visual resources by adding man-made features to the viewshed. However, this impact would not be irreversible or irretrievable commitment of visual resources as these features would be removed during Project decommissioning.

4.16.14 Public Health and Safety/Hazardous Materials

Hazardous materials will be used during construction activities and localized spills and leaks of hazardous materials from equipment, storage sites or vehicles/equipment could occur. O&M of the Proposed Project would also involve the periodic use and transport of hazardous materials. Mitigation measures would be implemented to reduce potential impacts and the Proposed Project would not be expected to cause an unavoidable adverse public health and safety.

4.17 Relationship between Short-Term Uses and Long-Term Productivity of the Environment

Construction and Operation and Maintenance of the Proposed Project would result in the loss of resources over the life of the Project. Impacts to biological, soil, water, public safety, visual, noise, and air quality resources would occur. Approximately 591 acres of habitat would be affected beyond the life of the Proposed Project, and some flora and fauna specimens in and around the Proposed Project would be impacted.

While there would be irreversible and irretrievable commitments of some resources, as noted above, there would be no permanent loss of the overall productivity of the environment due to the Proposed Project.

TABLE 4-11
ONGOING AND REASONABLY FORESEEABLE ACTIONS IN THE PROJECT VICINITY

	Project Name / Owner	Description	Status	Primary Impact Location
	ON Line Project (NVN 085210) / Great Basin Transmission South LLC & NV Energy	New Robinson Summit Substation and a 230-mile 500 kV transmission and fiber optic line to existing Harry Allen Substation.	Existing.	Passes through Project area
	Kern River Gas Transmission System	Two natural gas pipelines from Wyoming to Las Vegas/San Bernardino	Existing	Pipeline passes through project area
	Meadow Valley Gypsum Project	Open pit mine, processing plant and ancillary facilities; a 7,800-foot access road; and a low-water crossing across Meadow Valley Wash. 47 acres of public land.	Existing	12 mi northeast of Project
	Reid Gardner Generating Station / NV Energy	557 MW coal plant, 240-acre fly ash landfill and 315-acre evaporation pond	In process of decommissioning. Three of the plant's four units will close in 2014, and the remaining unit will close in 2017.	In Project area
	Moapa Solar Project (NVN 89176) / First Solar (formerly K Road Solar)	250 MW, 2,000 acres on the Moapa River Indian Reservation plus 153 acres for gen-tie and access road/pipeline.	Construction began March 2014, expected to be completed by end of 2015 (First Solar 2013)	12 mi southeast of Project
	Moapa Solar Energy Center (NVN 88870) / RES Americas	200 MW PV solar project on 850 acres on the Moapa River Indian Reservation, with a 7.5-mile 230kV transmission line on BLM-administered lands connecting to Harry Allen Substation.	ROD issued in May 2014, construction expected to begin in 2015. (Bureau of Indian Affairs 2014)	17 mi southeast of Project
	UNEV Pipeline Project / Holly Energy	425 mile, 12-inch diameter common carrier refined products pipeline from Salt Lake City to Las Vegas	Scheduled to be completed in 2014 (Holly Energy, 2014)	Corridor passes through Project area

TABLE 4-11
ONGOING AND REASONABLY FORESEEABLE ACTIONS IN THE PROJECT VICINITY

	Project Name / Owner	Description	Status	Primary Impact Location
	Coyote Springs Investment (CSI) Development Project	New master-planned community on 21,000 to 43,000 acres. 111,000 to 159,000 residential units and additional amenities/facilities.	USFWS issued a ROD in 2008. The golf course has been constructed, but no other construction has occurred. Land has been transferred among holding companies, there appear to be no immediate plans to continue construction.	Junction of U.S. 93 and SR 168, 19 mi northwest of Project
	One Nevada Transmission Line Project (NVN 82076) / NV Energy	236 mi single-circuit 500 kV transmission line between Harry Allen and Robinson Summit Substations.	ROD issued March 2011. ROW in abeyance.	In utility corridor passing near Project area
	Clark, Lincoln, and White Pine Counties Groundwater Development Project / SNWA	Transport approximately 124,988 ac-ft/yr of groundwater. Production wells, 306 mi (490 km) of buried water pipelines, 5 pumping stations, 6 regulating tanks, 3 pressure reducing stations, a buried storage reservoir, a water treatment facility, and about 323 mi (517 km) of 230-kV overhead power lines, 2 primary and 5 secondary substations.	ROD signed December 2012, ROWs issued May 2013. Construction expected to be complete by 2022.	SNWA plans to develop 91,988 ac-ft/yr of its existing water rights in Spring, Delamar, Dry Lake, and Cave valleys as part of the project. For the Delamar and Dry Lake valleys specifically, the Nevada State Engineer issued water right rulings to SNWA on March 22, 2012 for 6,042 ac-ft/yr and 11,584 ac-ft/yr, respectively.
	Eastern Nevada Transmission Project / Silver State Energy Association	Construction, operation, and maintenance of two separate 230-kV transmission lines; the Silverhawk to Newport and Gemmill to Tortoise transmission lines, approximately 33 and 21 miles in length, respectively. Approximately 9.5 miles of the Gemmill to Tortoise line parallels to but is located between 700-2,600 feet north of the Lincoln County Conservation, Recreation, and Development Act corridor to avoid conflict with private and tribal lands	Pending	Gemmill to Tortoise transmission line is located adjacent to the northeast corner of the Aiya Solar Project (the Silverhawk to Newport transmission line is located approximately 25 miles southwest of the solar project).
	Zephyr Transmission Lines Project / Duke American Transmission Co (DATC)	500 kV transmission lines from Wyoming to El Dorado Valley	Acquired by DATC in 2011, in early NEPA review. Target construction 2017-2020 (DATC 2014)	In utility corridor passing near Project area
	NVN 83914/ Bright Source Energy	10,000 acre, 500 MW CSP	Pending	2 mi northeast of Project
	NVN 84631/ Bright Source Energy Solar	2,000 acre, 1,200 MW CSP	Pending	18 mi southeast of Project

TABLE 4-11 ONGOING AND REASONABLY FORESEEABLE ACTIONS IN THE PROJECT VICINITY				
	Project Name / Owner	**Description**	**Status**	**Primary Impact Location**
	NVN 87907/ Pacific Wind Development	2,200 acre wind testing	Pending	7 miles northeast of Project
	NVN 87970/ Pacific Wind Development	5,089 acre wind testing	Pending	17 miles northeast of Project
SOURCES: BLM and DOE 2012, Table 11.3.22.2-1 (p. 11.3-98), Table 11.3.22.2-2 (p. 11.3-101 et seq.), and Table B-2 (p. B-4); also as indicated.				

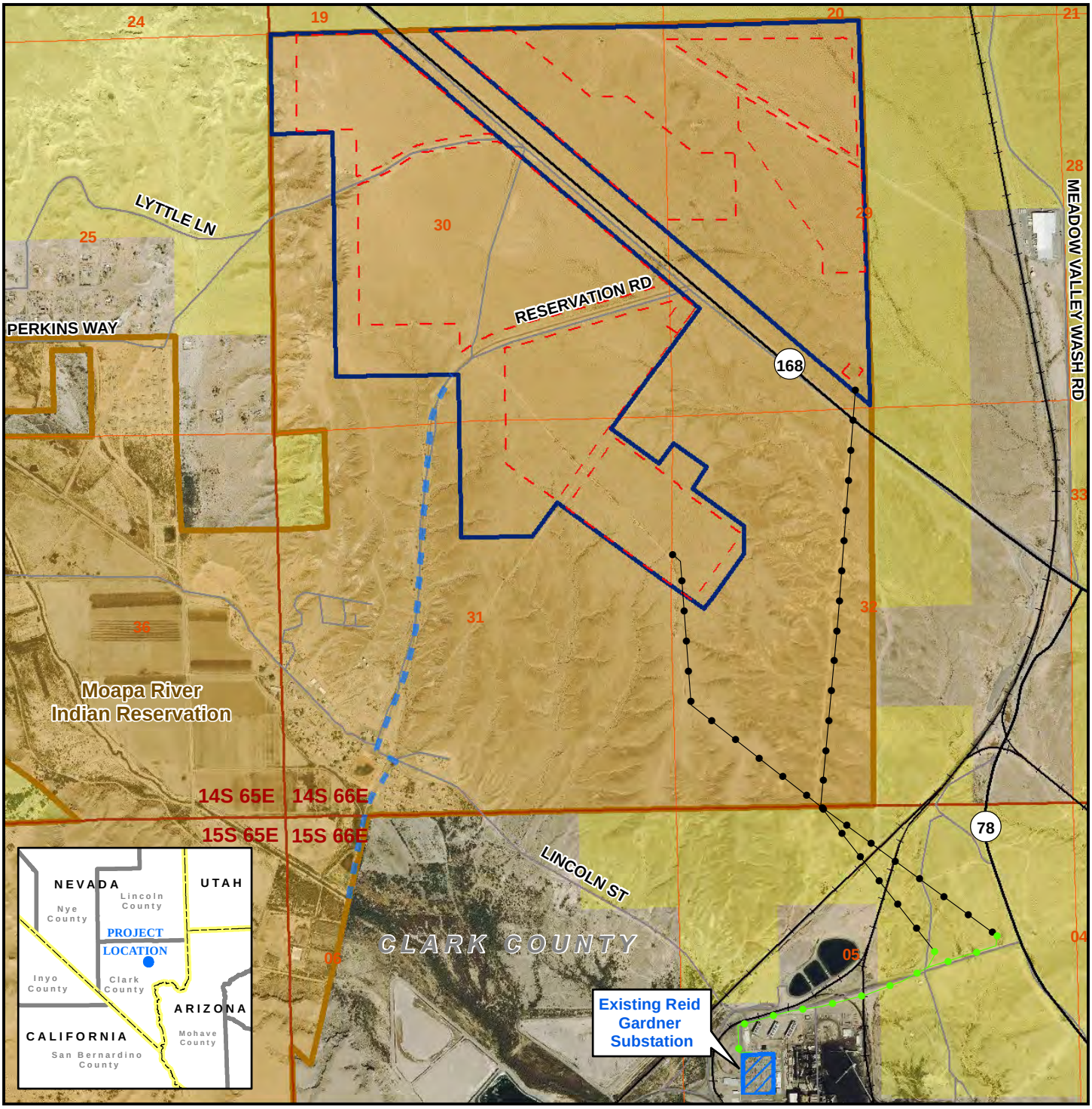

Legend

- Gen-Tie Routes
- Double-Circuit Line
- Water Pipeline
- State Highway
- Road
- Railroad
- Proposed Solar Boundary
- Potential Disturbance Area
- Existing Substation
- County Boundary
- Township / Range Boundary
- Section Boundary
- Jurisdictional Land Ownership
- Bureau of Land Management Land
- Tribal Land

0 1,000 2,000 3,000

Feet

Universal Transverse Mercator
North American Datum 1983
Zone 11 North, Meters

Aiya Solar Project

FIGURE 4-1
PROJECT COMPONENTS

Map Extent: Clark County, Nevada

Date: 05-06-15		Author: rnc

G:\Aiya Solar Project/MXD's/Project Components 8.5x11 050615.mxd

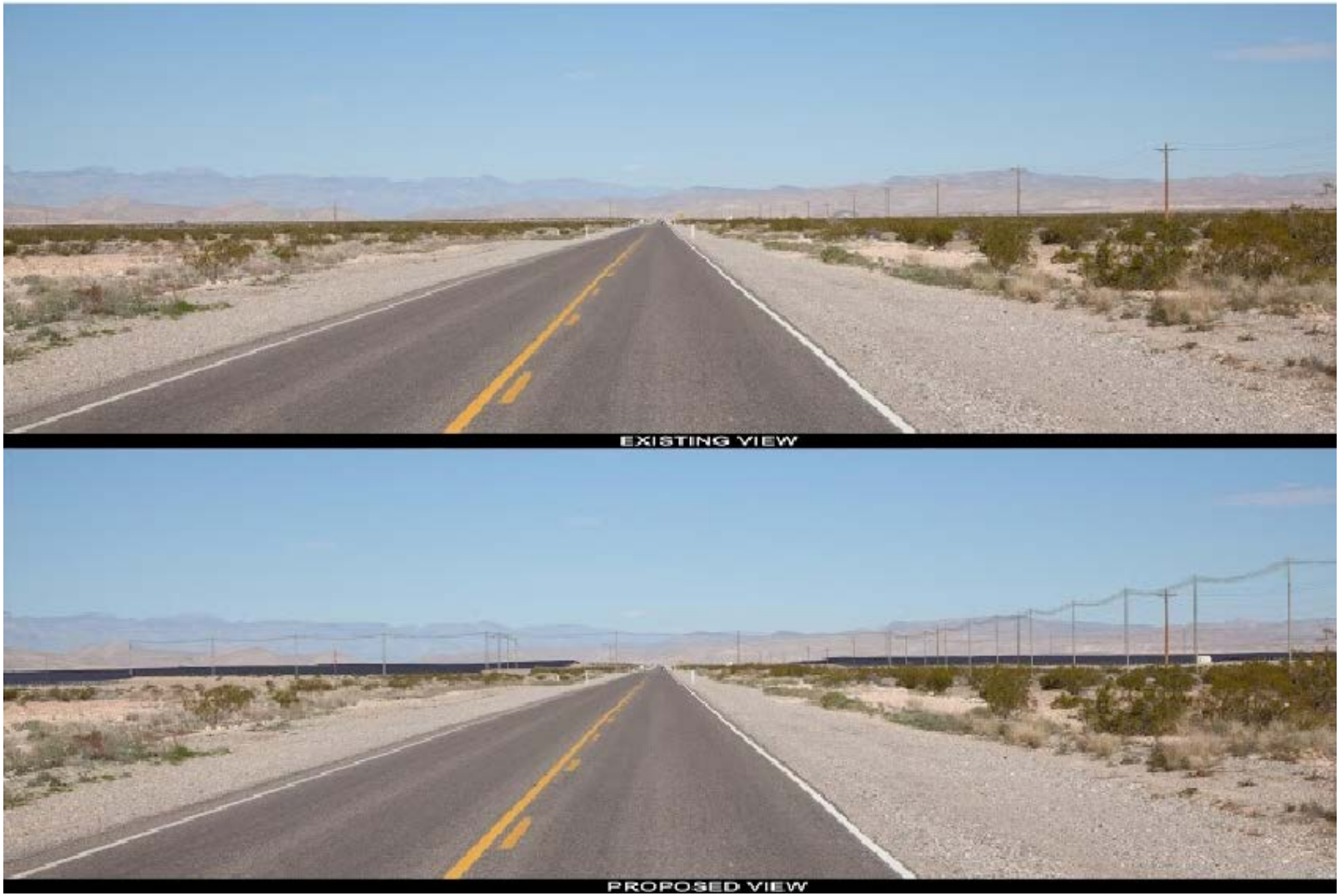

Figure 4-2

Visual Simulation from KOP 1

Looking Northwest from Highway 168 about 0.5 Miles Southeast of Aiya Solar Site

Figure 4-3

Visual Simulation from KOP 2

Looking Northwest from Highway 168 about 0.1 Miles Southeast of Intersection with Reservation Road

Figure 4-4

Visual Simulation from KOP 3

Looking Southwest Down Reservation Road from Highway 168 / Reservation Road Intersection

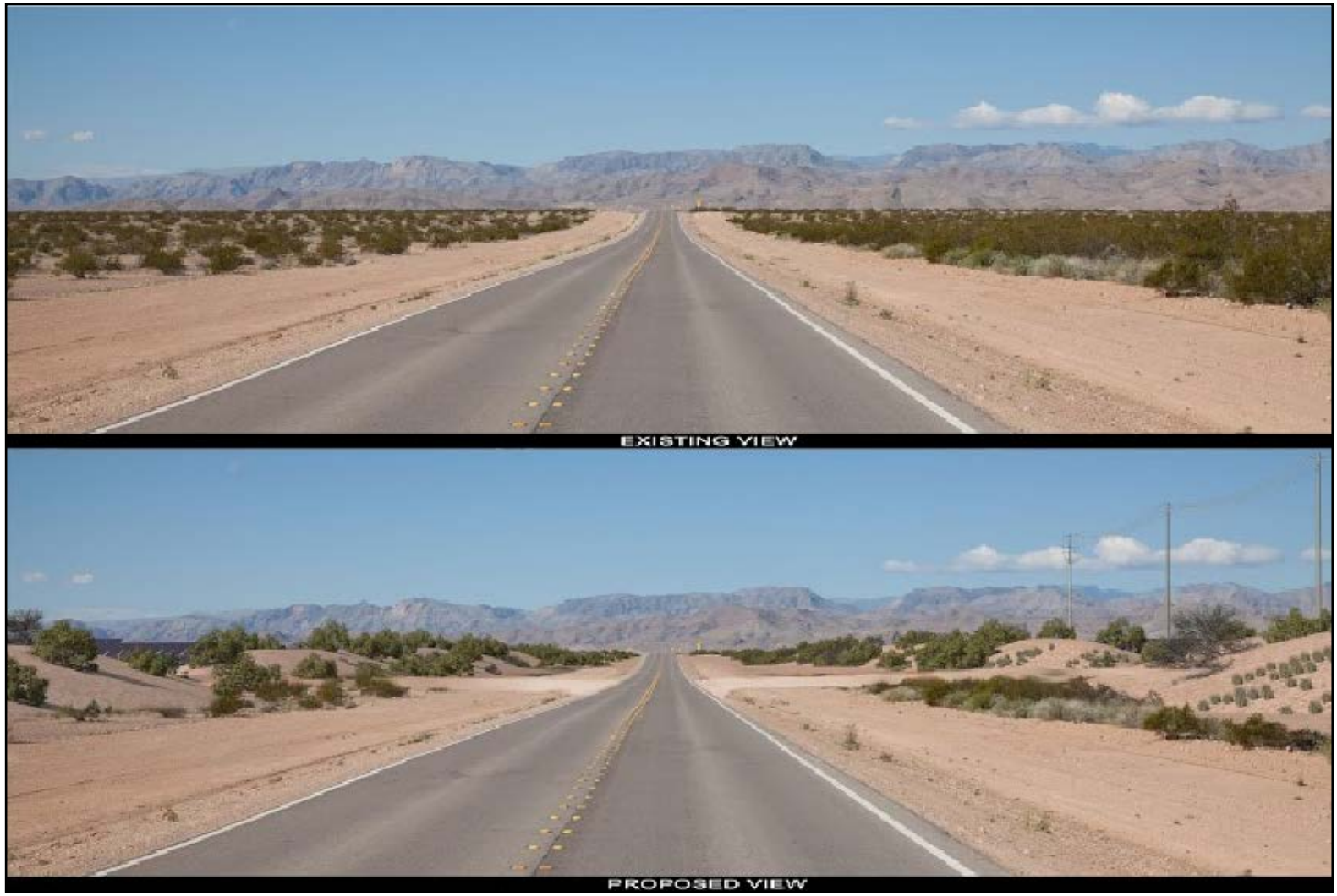

Figure 4-5

Visual Simulation from KOP 4

Looking Southwest Down Reservation Road just Southwest from Highway 168 / Reservation Road Intersection

Figure 4-6

Visual Simulation from KOP 5

Looking Northeast Down Reservation Road about 0.5 mile Southwest of Highway 168 / Reservation Road Intersection

Figure 4-7

Visual Simulation from KOP 6

Looking Southeast Down Highway 168 about 0.2 mile from Highway 168 / Lyttle Lane Intersection

Figure 4-8

Visual Simulation from KOP 7

Looking West from Highway 168 near Highway 168 / Lyttle Lane Intersection

Figure 4-9

Visual Simulation from KOP 8

Looking Northwest from Point on Old Spanish Trail about 2.4 miles Southeast of Solar Site

Figure 4-10

Visual Simulation from KOP 9

Looking Northwest from Point where Old Spanish Trail crosses Hidden Valley Road about 2.3 miles Southeast of Solar Site

Figure 4-11

Visual Simulation from KOP 10

Looking Northwest from Point on Old Spanish Trail about 2.2 miles Southeast of Solar Site

Figure 4-12

Visual Simulation from KOP 11

Looking West from Point Representative of Two Locations on Old Spanish Trail about 2.3 miles South-Southeast of Solar Site

Chapter 5

Mitigation

CHAPTER 5
MITIGATION

Per the BIA Handbook (2012), analysis of alternatives must include a discussion of mitigation measures where mitigation is feasible, and of any monitoring designed for adaptive management. Mitigation measures are included to provide a full and accurate comparison of environmental effects of alternatives. These measures include design features and additional mitigation.

Mitigation of adverse environmental impacts is not required to implement a proposed action. The purposes of NEPA are to analyze these impacts, disclose them to the public in the EIS, and help public officials make decisions that are based on an understanding of environmental consequences and take actions that protect, restore, and enhance the environment. Mitigation measures represent best management practices and technologies, and the most current regulatory guidance to reduce adverse impacts to environmental resources such that the overall impacts resulting from the Proposed Project will minimized to the extent feasible. The analyses determined that mitigation measures would be implemented for the following resources to further minimize impacts: Soils, Water Quality, Air, Biological Resources, Cultural Resources, Transportation, and Public Health & Safety.

5.1 Mitigation Measures – Soils

The Proposed Project could result in adverse impacts to soils as a result of increased erosion rates and reduction of soil productivity from removal of vegetation and grading activities. The Applicant would implement the following mitigation measures to reduce overall impacts to soil resources:

- Grading on the solar site would be minimized to only those areas where necessary to meet the construction and operational requirements of the Project. Where the till-and-roll technique is used on nearly all the site, the soil surface will be prepared using conventional farming equipment and the natural contours, soil profiles, and native seed bank materials would be maintained.

- Construction and operational activities will be conducted in compliance with a SWPPP that would include BMPs and other erosion-control measures designed to minimize soil erosion and limit sheet flow and downstream sedimentation. The SWPPP would also incorporate adaptive management of actions if erosion and sedimentation control measures are found to be insufficient to control surface water at the site.

- To minimize wind erosion, all construction activities shall comply with the Fugitive Dust Control Plan that would be developed and implemented for the Proposed Project. Measures such as watering and 'stop work' periods during high winds would be incorporated into the plan.

- A Site Restoration and Revegetation Plan would be implemented to limit impacts to temporary disturbance areas as much as practicable. The Plan would define temporary disturbance areas and BMP measures for soil restoration and re-planting and establish monitoring and success criteria.

5.2 Mitigation Measures – Water Quality / Quantity

Potential adverse impacts to water are related to soil erosion and downstream sedimentation as well as water transport of hazardous material through soil erosion. As mentioned above, soil erosion would be managed via the SWPPP and erosion controls within ephemeral washes to reduce velocity of flood flow and limit downstream sedimentation. The measures below would be implemented to reduce overall impacts to water quality:

- Grading on the solar site would be minimized to only those areas where necessary to meet the construction and operational requirements of the Project – such as where leveling is necessary, the access ways among the rows of panels, etc. The drainage plan will be designed to allow surface flows upstream of the site to flow to the ephemeral drainages downstream of the site. In some cases, upstream surface flow will be diverted around the solar array and be returned to the ephemeral drainages downstream of the site.

- Final grading and drainage plans will be completed and submitted for approval prior to construction. The final drainage and grading plans would demonstrate that downstream flows would not be adversely impacted due to any proposed changes to natural washes resulting from proposed grading, drainage management measures or the addition of retention ponds.

- The paths for all stormwater flows would be identified and modeled as part of the final grading and drainage plan.

- As part of the minimization of grading in the final design, ephemeral drainages would be avoided to the extent practical. The retention of other smaller drainages would be maximized to the extent practical where they can remain stable with project operation.

- The number of drainage crossings would be minimized to the extent possible and each would be designed to accommodate adequate flow.

- Adaptive management techniques will be implemented via the SWPPP to maintain BMPs utilized to decrease sediment erosion and downstream transport of such during large rain events.

- An annual inspection of jurisdictional drainages receiving flows from the site will be conducted at designated monitoring points to determine if accelerated erosion is occurring. If accelerated erosion is observed, an adaptive management strategy will be employed to correct the situation.

- Weekly and post-storm monitoring of erosion and sedimentation would be conducted during construction. If localized gullies were to develop or result in increased rates of erosion and sedimentation, repairs would be made and erosion and sedimentation control measures would be updated.

- Placing Project facilities in washes with periodic significant flows would be avoided by all alternatives to minimize direct and indirect impacts to the washes from erosion, migration of channels and local scour. All larger ancillary facilities will be located outside of drainages. Some PV supports could be placed within ungraded drainages where technically feasible.

- Where fencing would be built across drainages, if flows through those drainages would impact the fencing, it would be inspected and repaired as needed within 48 hours of large flood events.

- A SPCC plan would be developed and implemented during construction and the operations phase of the Proposed Project. Adequately-sized secondary spill containment would be incorporated around the transformers at the on-site substation to ensure proper capture and control measures for potential spills. The Plan would also provide for hazardous material spill prevention and clean-up measures, were a spill to occur.

- To conserve water, xeric landscaping would be used if applicable.

- If groundwater is used as the source of water during construction, the Applicant would prepare a Groundwater Monitoring and Reporting Plan to guide implementation of the Project. The Southern Nevada Water Authority (SNWA) would be notified when and if the Groundwater Monitoring and Reporting Plan is made available to the public.

5.3 Mitigation Measures – Air

The primary impact upon air would occur during the construction and decommissioning periods from increased vehicle emissions and fugitive dust. The following mitigation measures would be incorporated into construction contracts by the Proponent and would be implemented to reduce overall air impacts that would result from the Proposed Project:

- The Project would obtain a dust control permit from Clark County for activities outside tribal land including any required supplements.
- The area of grading and vegetation removal would be limited to only that area required for Project construction and operation. Where the till-and-roll technique is used, natural contours, soil profiles, and native seed bank materials would be maintained.
- Ground disturbing activities would be undertaken in accordance with the approved dust control plan to minimize the amount of time areas would be exposed to wind erosion.
- Vehicular speeds on non-paved roads would be limited 25 miles per hour.
- When hauling material and operating non-earthmoving equipment, spillage would be prevented and speeds would be limited to 15 miles per hour and speed of earth-moving equipment to 10 mph.
- Grading operations would be phased where appropriate to limit the amount of disturbance at any one time, and water would be used for stabilization of disturbed surfaces under windy conditions.
- Water would be applied to disturbed areas to control dust and to maintain moisture level at optimum levels for compaction, as needed. Water will be applied using water trucks and application rates would be monitored to prevent runoff and ponding. Approved palliatives would be used to control dust as required.
- Exposed stockpiled material areas would be covered during windy conditions (forecast or actual wind conditions of approximately 25 miles per hour or greater).
- Stabilize open storage piles and disturbed areas by covering and/or applying water to stockpile to form a crust or organic dust palliative where appropriate at the completion of activity.

- Dust control measures such as watering and the application of palliatives approved by the USFWS and the Tribe would be applied to access roads and other Project roads to adequately control fugitive dust.

- Excavation and grading would be suspended during periods when sustained winds exceed a designated speed.

- All trucks hauling soil and other loose material would be covered or at least 2 feet of freeboard would be maintained.

- All paved roads would be kept clean of objectionable amounts of mud, dirt, or debris, as necessary. Gravel or other similar material would be used where non-paved access roads intersect paved roadways to prevent mud and dirt track-out.

- If used, air pollutant emissions from the emergency diesel generators and fire water pump engines would be minimized by an operating limitation of no more than 50 hours per year, per engine for routine testing and maintenance of these components. These engines would be compliant with current EPA tier emission performance criteria.

- Limit unnecessary idling, and perform periodic unscheduled inspections to ensure that construction equipment is properly maintained.

- A traffic and parking management plan would be finalized to minimize traffic interference and maintain traffic flow.

Recommended Measures:

In addition to the mitigation measures identified above, additional recommendations for reducing impacts to air quality are outlined below:

- Recommend that all contractors maintain and tune engines per manufacturer’s specifications to perform to EPA certification levels, where applicable.

- Any tampering with engines would be prohibited and continuing adherence to manufacturer's recommendations would be required.

- Recommend that contractors lease new, clean diesel burning equipment. In general, the best available emissions control technology would be used - Tier 4 engines should be used for project construction equipment to the maximum extent feasible.

- Recommend that contractors use EPA-registered particulate traps and other appropriate controls where suitable to reduce emissions of diesel particulate matter and other pollutions at the construction site.

- Installation of wind fencing will be considered for use in addition to the primary dust control methods, if needed and applicable to aid in effective minimization of fugitive dust.

5.4 Mitigation Measures – Biological Resources

The following measures will minimize, reduce, and mitigate impacts to biological resources from implementation of the Proposed Project:

As identified in the Biological Opinion (**Appendix O**), the following measures will be implemented in order to mitigate potential effects to desert tortoise:

Minimization or Conservation Measures

1. **Construction area flagging**. The ROW boundaries will be flagged prior to beginning construction activities and disturbance confined to the ROW. A biological monitor will escort all survey and geotechnical crews on site prior to tortoise-proof fence construction. All survey and geotechnical crew vehicles will remain on existing roads and stay within the flagged areas to the maximum extent practicable. In cases where construction vehicles are required to travel off existing roads, a biological monitor (on foot) will precede the vehicles.

2. **Desert tortoise fencing**. Tortoise-proof fencing will be installed around the boundary of the solar facility. Biological monitors or biologists approved to handle and relocated tortoises will be present during fence installation to relocate all tortoises in harm's way to outside the permitted ROW. Additional clearance surveys and activities will be conducted after completion of the tortoise fence to ensure that no tortoises remain fenced inside the construction boundaries.

   To reduce traffic mortality risk to tortoises that could occur near the segment of SR 168 that bisects the project and to maintain habitat connectivity, the Applicant will prepare a fencing/culvert plan for Service review. The Service would approve the location and numbers of culverts and placement of fencing prior to commencement of project construction. Culverts will be designed and sufficiently sized to allow desert tortoise use.

   Fence specifications will be consistent with those approved by the Service (Service 2009). Tortoise guards will be placed at all road access points where desert tortoise-proof fencing is interrupted to exclude desert tortoises from the project

footprint. Gates or tortoise exclusion guards will be installed with minimal ground clearance and shall deter ingress by desert tortoises. Permanent tortoise-proof fencing along the project area will be appropriately constructed, monitored, and maintained as designated the Desert Tortoise Field Manual (Service 2009). Monitoring and maintenance will include regular removal of trash and sediment accumulation and restoration of zero ground clearance between the ground and the bottom of the fence, including re-covering the subsurface portion of the fence if exposed.

One-way Gates. At least three one-way gates will be installed in the desert tortoise fencing to allow tortoise to exit the site and prevent reentry. The rationale is that tortoises have been found inside the fenced and cleared areas on other projects. The gates will be made of metal and adjusted so the door swings only open into the non-project habitat side. The Arizona Game and Fish Department evaluated this technology and found that a design based on badger gates used in Spain showed the most promise. These swing-style badger gates have small, hinged doors inserted in wildlife fencing at ground level and were the only style of gate identified that is specifically designed for smaller mammals (Caltrans 2014) and are expected to serve desert tortoise as well. The gates will be inspected at least weekly during construction because this type of gate requires periodic maintenance to ensure that it is swinging freely and is unobstructed by debris or vegetation. A concrete or otherwise impervious slab will be installed beneath each gate to help prevent plant growth impeding the swing of the gate and to reduce maintenance needs. The gates will be removed and replaced with desert tortoise-proof fencing after installation of the solar panels is complete.

A remote motion-activated camera will be installed at each gate to evaluate wildlife use of the gates. This is a relatively inexpensive and passive way to track the use by desert tortoise and other species. Cameras would be employed during the first two desert tortoise active periods following completion of tortoise fence construction. Data retrieval, camera checks and maintenance, and battery checks/replacement will occur weekly. Camera use during December through February is not warranted.

3. **Field Contact Representative**. The BIA and Applicant will designate a Field Contact Representative (FCR) who will be responsible for overseeing compliance with this Biological Opinion. The FCR will be onsite during all active construction activities that could result in the “take” of a desert tortoise. The FCR will have the authority to briefly halt activities that are in violation of the desert tortoise protective measures until the situation is remedied.

4. **Authorized desert tortoise biologist**. All authorized desert tortoise biologists (and monitors) are agents of BIA and Service and will report directly to BIA, Service, BLM, and Applicant concurrently regarding all compliance issues and take of desert

tortoises; this includes all draft and final reports of non-compliance or take. Authorized desert tortoise biologists, monitors, and the FCR will be responsible for ensuring compliance with all conservation measures for the project. Potential authorized desert tortoise biologists will submit their statement of qualifications to the Service.

An authorized desert tortoise biologist will record each observation of desert tortoise handled in the tortoise monitoring reports. This information will be provided directly to BIA, Service, and BLM.

5. **Biological monitoring**. Under supervision of an authorized biologist, biological monitors will be present at all active construction locations (not including the solar field after it has been fenced with desert tortoise fencing and clearance surveys have been completed). Authorized desert tortoise biologists will survey the construction area to ensure that no tortoises are in harm's way; provide oversight to ensure proper implementation of protective measures; record and report desert tortoise and tortoise sign observations in accordance with approved protocol; select and supervise biological monitors; and report incidents of noncompliance in accordance with the BO and other relevant permits. If a tortoise is observed entering the construction zone, work in the immediate vicinity will cease until the tortoise moves out of the area. Tortoises found above ground during construction activities will be moved offsite by an authorized biologist.

   Temporary tortoise-proof fencing could be installed at the discretion of the Applicant to partition the site to allow construction prior to completion of the clearance surveys. Installation of the temporary fencing would be monitored as described above. This could be implemented for various reasons including, though not limited to, allowing the move on of construction trailers and establishing staging or parking areas.

   An authorized desert tortoise biologist or biological monitor will inspect areas to be backfilled immediately prior to backfilling

6. **Desert tortoise clearance surveys and relocation**. After installation of tortoise fencing around the perimeter of the solar facility and prior to surface-disturbing activities, authorized desert tortoise biologists assisted by monitors will conduct a clearance survey to locate all desert tortoises in the solar field, using techniques that provide full coverage of construction zones (Service 2009). Treatment of tortoises will occur as follows:

   - Tortoises greater than 100mm will be health assessed, telemetered, and left *in situ* until total number is determined. Telemetered tortoise shall be located weekly while *in situ*. A health assessment will be performed on each tortoise; no biological samples are required. Juveniles less than 100 mm will not be

telemetered but health assessed and held in quarantine pens until they can be moved with the larger tortoises to the release sites. Captive husbandry of tortoises held in pens shall follow protocols provided by the Service.

- Released tortoises should be monitored until the Authorized Biologist determines they are sheltering appropriately; long-term monitoring is not required for the number of tortoises expected to be found.
- If more than 12 adult tortoises are found that require capture and movement, BIA and BLM will contact the Service and require reinitiation of consultation.

The relocation (12 or fewer tortoises) will adhere to the following:

- Tortoises found in the ROW within 500 meters of the project boundary will be relocated outside of the ROW to suitable habitat on either Tribal or Federal lands with written permission of the land manager or owner (email is sufficient). Tortoises will be released as far as practicable from unfenced SR 168. The area on Tribal lands south and east of the project boundaries is the priority destination.
- Shade structures shall be installed along the perimeter fence along sections where tortoises were released in coordination with the Service. The shelters will be designed and installed to provide shelter for both small and large tortoises. The shelters will be installed at approximately 1,000-foot intervals (or as approved by the Service), with one smaller sized shelter placed in between each larger shelter in order to provide additional locations for subadults and juveniles. Shelters will be made from either PVC tubes or similar material with a diameter of 14 inches or greater for the larger shelters and 6-8 inches for the smaller ones. Tubes should be cut into 2-3 foot length and cut horizontally. Each shade structure would be partially buried to keep them from being blown away and to assist with thermoregulation within the shelter. During all fence monitoring, these structures will be inspected for their effectiveness and adjusted as needed to increase their effectiveness. These inspections will continue until either no tortoises are found consistently walking the fence during an entire active season or until the end of the project's construction period, whichever is earlier.
- The Service would be contacted to determine the disposition of tortoises (if any) requires movement more than 500 meters from point of capture. The Service will direct disposition of those animals taking into consideration the distance to be moved, the suitability of nearest habitat, and the observed health condition of the animal. The Service would then determine the best option for disposition.
- An authorized biologist approved by the Service to perform health assessments will perform a physical health assessment on each tortoise prior to release. Only healthy animals may be released.
- Tortoises excavated from burrows will be relocated to unoccupied natural or artificially constructed burrows immediately following excavation in accordance with the Service guidelines and temperature limits. The constructed or unoccupied natural burrows will as close to the existing burrow as feasible. The authorized biologist (using criteria of habitat suitability and soil friability) will determine approximately where each tortoise will be moved prior to its capture.

- The authorized biologist will exercise judgment and discretion to ensure that survival of the desert tortoise is likely, such as administering fluids, providing additional shelter, or briefly holding the animal for a longer observation period.
- If a tortoise voids its bladder while being handled, it will be given the opportunity to rehydrate before release. Tortoises will be offered fluids by soaking in a shallow bath, or an authorized desert tortoise biologist will administer nasal-oral fluid, or injectable epicoelomic fluids. Any tortoise hydration support beyond offering water or shallow soaking would only be provided by an authorized biologist who has received advanced training in health assessments and been specifically approved by the Service for these procedures.
- No surface-disturbing activities shall begin until two consecutive surveys find no live tortoise. In sectors or zones where a live tortoise is found, surveys will be repeated until the two-pass standard is met.
- An authorized biologist will supervise the excavation of burrows potentially containing desert tortoises located in the area to be disturbed with the goal of locating and removing all desert tortoises and desert tortoise eggs. Clearance will include evaluation of caliche caves and dens will also be evaluated, as tortoises are known to shelter there. The practice of excavating every burrow (sometimes referred to as “rat holing”), will not be used as it has shown to be ineffective and inefficient in locating tortoises. During clearance surveys, all handling of desert tortoises and their eggs and excavation of burrows shall be conducted solely by an authorized desert tortoise biologist or monitor supervised by the biologist, in accordance with the most current Service-approved guidance (Service 2009). If any active tortoise nests are encountered, the Service must be contacted immediately prior to removal of any tortoises or eggs from those burrows to determine the most appropriate course of action. Unoccupied burrows will be collapsed or completely backfilled to prevent desert tortoise entry. Outside construction work areas, all potential desert tortoise burrows and pallets within 50 feet of the edge of the construction work area will be flagged. If a desert tortoise occupies a burrow during the less-active season, the tortoise will be temporarily penned if approved by the Service. No stakes or flagging will be placed on the berm or in the opening of a desert tortoise burrow. Desert tortoise burrows will not be marked in a manner that facilitates poaching. Avoidance flagging will be designed to be easily distinguished from access route or other flagging, and will be designed in consultation with experienced construction personnel and authorized biologists. This flagging will be removed following construction completion.
- Burrows with the potential to be occupied by tortoises within the construction area will be searched for presence of tortoises. In some cases, a camera or fiber-optic scope will be used to determine presence or absence within a deep burrow. If burrows inhabited by tortoises are found in the construction area where a transmission pole is to be placed, the transmission line pole location will be shifted to avoid the burrow. Only if it is not possible to shift the transmission line pole, the tortoise will be excavated using hand tools by an authorized biologist.

7. **Weed Management Plan**. Prior to construction, a Weed Management Plan will be developed that includes measures designed to reduce the propagation and spread of designated noxious weeds, undesirable plants, and invasive plant species, or as determined by the agencies (BIA, BLM, etc.) in coordination with the Tribe. Measures in the plan will include, but are not limited to the following:

   - Areas with weeds will be mapped. Topsoil with the presence of weeds will not be salvaged and reused elsewhere in the project. The topsoil from such areas will be disposed of properly.
   - Inspect heavy equipment for weed seeds before they enter the project area. Require that such equipment be cleaned first to remove weed seeds before being allowed entry. Clean equipment that has been used in weed-infested areas before moving it to another area.
   - Any straw or hay wattles are used for erosion control must be certified weed free.

8. **Worker environmental awareness training**. Worker environmental awareness training will be presented to all personnel onsite during construction. This program will contain information concerning the biology and distribution of the desert tortoise, desert tortoise activity patterns, and its legal status and occurrence in the proposed project area. The program will also discuss the definition of "take" and its associated penalties, measures designed to minimize the effects of construction activities, the means by which employees limit impacts, and reporting requirements to be implemented when tortoises are encountered. Personnel will be instructed to check under vehicles before moving them as tortoises often seek shelter under parked vehicles. Personnel will also be instructed on the required procedures if a desert tortoise is encountered or observed within the proposed project area. Worker environmental awareness training will be mandatory, as such, workers will be required to sign in and wear a sticker on their hardhat to signify that they have received the training and agree to comply. This may be presented in person by a biologist or via a video of a biologist presenting the information.

9. **Access roads**. Construction access will be limited to the project ROW and established access roads as defined in this project description.

10. **Speed limits and signage**. Until the desert tortoise fence has been constructed, a speed limit of 15 miles per hour will be maintained during the periods of highest tortoise activity (March 1 through November 1) and a limit of 25 mph during periods of lower tortoise activity. This will reduce dust and allow for observation of tortoises in the road. Speed-limit and caution signs will be installed along access roads and service roads. After the tortoise proof fence is installed and the tortoise clearance surveys are complete, speed limits within the fenced and cleared areas will be established by the construction contractor and based on surface conditions and safety considerations and remain with limits established by the Service.

11. **Trash and litter control**. Trash and food items will be disposed properly in predator proof containers with resealing lids. Trash will be emptied and removed from the project site on a periodic basis as they become full. Trash removal reduces the attractiveness of the area to opportunistic predators such as ravens, coyotes, and foxes.

12. **Raven and raptor control**. The Applicant will implement the Raven Management Plan (BLM 2014) to be provided by the BLM. The Applicant will inspect structures annually for nesting ravens and other predatory birds and report observations of nests to the Service, BLM, and BIA. Transmission line support structures and other facility structures will be designed to discourage their use by raptors for perching or nesting (e.g., by use of anti-perching devices) in accordance with the most current guidelines (Avian Power Line Interaction Committee 2006). In addition to increasing desert tortoise protection, following these guidelines during transmission line construction will reduce the possibility of avian electrocution and other hazards.

13. **Overnight hazards**. No overnight hazards to desert tortoises (e.g., auger holes, trenches, pits, or other steep-sided depressions) will be left unfenced or uncovered; such hazards will be eliminated each day prior to the work crew and monitoring biologists leaving the site. All excavations will be inspected for trapped desert tortoises at the beginning, middle, and end of the workday, at a minimum, but will also be continuously monitored by a biological monitor or authorized biologist. Should a tortoise become entrapped, the authorized biologist will remove it immediately.

14. **Blasting**. If blasting is required in desert tortoise habitat, detonation will only occur after the area has been surveyed and cleared by an authorized desert tortoise biologist no more than 24 hours prior. A 200-foot radius buffer area around the blasting site will be surveyed and all desert tortoises above ground within this 200-foot buffer of the blasting site will be moved 500 feet from the blasting site, placed in unoccupied burrow, and temporarily penned to prevent tortoises that have been temporarily relocated from returning to the site. Tortoises located outside of the immediate blast zone and that are within burrows will be left in their burrows. All burrows, regardless of occupied status, will be stuffed with newspapers, flagged, and location recorded using a global positioning system (GPS) unit. Immediately after blasting, newspaper and flagging will be removed. If a burrow or cover site has collapsed that could be occupied, it will be excavated to ensure that no tortoises have been buried and are in danger of suffocation. Tortoise removed from the blast zone will be returned to their burrow if it is intact or placed in a similar unoccupied or constructed burrow.

15. **Penning**. Penning must be approved by the Service prior to pen construction. Penning will be accomplished by installing a circular fence, approximately 20-foot in diameter to enclose and surround the tortoise burrow. The pen will be constructed

with 1-inch horizontal by 2-inch vertical, galvanized welded 16-guage wire. Steel T-posts or rebar will be placed every 5 to 6-feet to support the pen material. Pen material will extend 18 to 24 inches above ground. The bottom of the enclosure will be buried 6 to 12 inches or bent towards the burrow, have soils mounded along the base, and other measures implemented to ensure zero ground clearance. Care will be taken to minimize visibility of the pen by the public. An authorized desert tortoise biologist or desert tortoise monitor will check the pen at least daily or at the frequency established by the Service to ensure that the desert tortoise is secure and not stressed. No desert tortoise will be penned for more than 48 hours without written approval by the Service. Because this is a relatively new technique, all instances of penning or issues associated with penning will be reported to the Service by phone and e-mail within 24 hours by an authorized biologist.

16. **Stormwater Pollution Prevention Plan**. The applicant will oversee the establishment and functionality of sediment control devices as outlined in the stormwater pollution prevention plan.

Operation and Maintenance Minimization Measures

The following minimization measures will be implemented during O&M (i.e., inspection and repair) of the proposed action to reduce effects on the desert tortoise and other species:

17. **Worker environmental awareness training**. Worker environmental awareness training will be required for all maintenance and operation staff for the duration of the project. In addition to an overview of minimization measures, the training will include specific best management practices designed to reduce effects to the desert tortoise.

18. **Desert tortoise fence inspections.** Desert tortoise fencing will be inspected weekly during periods of high tortoise activity (April 1 – May 31 and September 1 – October 31), every 2 weeks during the rest of the year through decommissioning and after storm events to ensure that the fence is intact, and that desert tortoises cannot enter the solar facility site.

19. **Biological Monitoring**. An authorized desert tortoise biologist or biological monitor(s) will be present during ground-disturbing and/or off-road operation and maintenance activities outside of the fenced solar facility to ensure that no tortoises are in harm's way. Tortoises found above ground during operation and maintenance activities will be avoided or moved by an authorized biologist, if necessary. Pre-maintenance clearance surveys followed by temporary exclusionary fencing also will be required if the maintenance action requires ground or vegetation disturbance. A biological monitor will flag the boundaries of areas where activities would need to be restricted to protect tortoises and their habitat. Restricted areas will be monitored to ensure their protection during construction.

20. **Speed Limits**. Speed limits within the project area, along transmission line routes, and access roads will be restricted to less than 25 mph during operation and maintenance.

Compensatory Mitigation

The applicant will pay the following required compensatory mitigation requirement:

21. **Habitat compensation**. Prior to surface disturbance activities within desert tortoise habitat, the Applicant will pay a one-time remuneration fee (per acre of proposed disturbance).

    The Applicant shall pay remuneration fees to offset residual impacts to desert tortoises from project- related disturbance to desert tortoise habitat. The Tribe shall prepare annual work plans for conservation actions to be funded and performed in the following year. Work plans for 2015-2019 are provided in Appendix A. These work plans and conservation actions must be approved in advance by the Service. Remuneration fees for habitat disturbance on Tribal lands will be paid by the Applicant directly to the National Fish and Wildlife Foundation for the Tribe. These fees cannot be used to implement or supplement minimization measures required in the Biological Opinion. Conservation actions proposed for funding should be based on the Reservation-wide Conservation Plan. Administrative costs of the account shall be paid by the Applicant. Because administrative fees are assessed annually, conservation actions should be funded as soon as possible.

    Fees for disturbance of BLM land will be paid at the same rate as Tribal fees but paid directly to the BLM. Fees for disturbance of private land will be paid at the rate of $550 per acre to the Clark County Desert Conservation Fund.

    The current base rate for Tribal and BLM land disturbance is $843 per acre of disturbance, as indexed for inflation, effective March 1, 2015, until the next adjustment becomes effective March 1, 2016. The fee rate will be indexed for inflation based on the Bureau of Labor Statistics Consumer Price Index for All Urban Consumers (CPI-U) on January 31st of each year, becoming effective March 1st. Fees assessed or collected for projects covered under this biological opinion will be adjusted based on the current CPI-U for the year they are collected. Information on the CPI-U can be found on the internet at: http://stats.bls.gov/news.release/cpi.nws.htm.

The Applicant shall complete the attached form (Appendix B) and submit it to the Service's Southern Nevada Fish and Wildlife office, by one of the methods below.

Email: Michael_senn@fws.gov

Postal Mail: Field Supervisor
Southern Nevada Fish and Wildlife Office
4701 North Torrey Pines Drive
Las Vegas, Nevada 89130

FAX: (702) 515-5231

Once received and approved by the Service, the Applicant will be notified. Following notification, the Applicant will coordinate actual payment with NFWF through:

Shawn Marchand (Shawn.Marchand@NFWF.ORG) and/or
Anne Butterfield (Anne.Butterfield@NFWF.ORG).

General Biological Mitigation Measures

- Preconstruction surveys will be conducted by qualified biologists according to the most current USFWS, BLM or NDOW protocols, where available, by species. These surveys would confirm the presence of special status plants, noxious weeds, and general and special status wildlife species, to help prevent direct loss of vegetation and wildlife and to prevent the spread of noxious plant species.

- Biological monitors will be assigned to the Proposed Project in areas of sensitive biological resources and along all roads used by Project personnel. Biological monitors would be in place along the access road during construction and/or temporary fencing utilized during the construction period to minimize any impacts from vehicle traffic during construction. The monitors will be responsible for ensuring that impacts to special status species, native vegetation, wildlife habitat, or unique resources would be avoided to the fullest extent possible. Where appropriate, monitors will flag the boundaries of areas where activities would need to be restricted to protect native plants and wildlife or special status species. Those restricted areas will be monitored to ensure their protection during construction.

- The Applicant will implement controls at entry locations to facilitate weed management and invasive species control in order to minimize infestation to the Proposed Project site from an outside source. Trucks and other large equipment will be checked before entering the site for any invasive species debris or seed.

- Monitoring for the presence of ravens and other potential human-subsidized predators of desert tortoises will be conducted and a Raven Control Plan will be implemented. BMPs to discourage the presence of ravens onsite include trash management, elimination of available water sources, designing structures to discourage potential nest sites, use of hazing to discourage raven presence, removal of nesting material prior to egg laying, and active monitoring of the site for presence of ravens.

- To minimize activities that attract prey and predators during construction and operations, garbage will be placed in approved containers with lids and removed promptly when full to avoid creating attractive nuisances for wildlife. Open containers that may collect rainwater will also be removed or stored in a secure or covered location to not attract birds.

- All work area boundaries will be conspicuously staked, flagged, or otherwise marked to minimize surface disturbance activities. All workers, equipment, vehicles, and construction materials shall remain within the ROW, existing roads, and designated areas. Staging areas will be located in previously disturbed areas whenever possible. Crushing of perennial vegetation in work areas will be avoided to the maximum extent practicable.

- All transmission towers and poles will be designed to be avian-safe in accordance with the *Suggested Practices for Avian Protection on Power Lines: the State of the Art in 2006* (Avian Power Line Interaction Committee [APLIC] 2006) and the Avian Power Line Interaction Committee (APLIC 2006) and *Reducing Avian Collisions with Power Lines* by the U.S. Fish and Wildlife Service and the APLIC (APLIC 2012). Additionally, a post-construction bird study will be implemented to monitor for incidents of bird strikes during the operation of the Proposed Project. The scope and protocol of the post-construction surveys for the monitoring and reporting of bird strikes were determined in the Bird and Bat Conservation Strategy (BBCS) developed in coordination with USFWS. If the tubular-H design type transmission pole structures are used the horizontal member of the structure will be fitted with an inverted-Y bar to discourage perching. Similar measures will be used to deter nesting if lattice structures are utilized. The following measures identified in the Bird and Bat Conservation Strategy will also be put into place:

    - Areas along the transmission line(s) with a high potential for collision would incorporate flight diverters on the static line to make it more visible. Static lines are the smallest diameter lines, and potentially the most difficult for birds to see and avoid. Where any pole requiring guy wires is located near areas of concentrated bird activity, guy wires would be marked to increase visibility where possible. Currently, guy wire locations are not known. Post-construction monitoring and adaptive management will clarify areas of

concentrated avian and/or bat use as well as areas experiencing a high degree of avian or bat mortality. Flight diverter types and locations would be determined through consultation with the BLM, USFWS, and/or NDOW. The number of structures requiring the use of guy wires would be kept to a minimum.

- To reduce perching along segments of the transmission line, perch deterrents would be installed during construction. Anti-perching and nesting devices are important tools for reducing the risk of avian electrocution and keeping the entire electrical system running smoothly. These deterrents also preclude the use of transmission lines and transmission line towers as hunting perches for raptor species, limiting the predation of other avian species or animals which use surrounding vegetation for foraging and nesting. Exact locations of perch deterrent poles would be determined in consultation with wildlife agencies prior to construction of the line.

- Inspections of lines and other areas where raptor or corvids (e.g. crows and ravens) might nest would be conducted annually. Inactive nests are not protected by the MBTA and removal would be conducted prior to the next breeding season. Should nesting activity become a long-term issue, alternate measures to discourage nesting activities and removal of nesting materials prior to eggs being laid would be implemented. Prior to removing or relocating any nests, facility personnel would consult with USFWS and when necessary, proper permitting would be obtained. More details are provided in the Raven Control Plan that has been developed for the project.

- Vegetation clearing and ground-disturbing activities would be conducted outside the migratory bird nesting season when practical. If ground-disturbing activities cannot be avoided during this time period, a qualified biological monitor will conduct pre-construction nest surveys.

  - For all bird species, surveys would cover all potential nesting habitat in and within 250 feet of the area to be disturbed (as landowner access allows). Any disturbance or harm to active nests would be reported within 24 hours to the USFWS and the BLM, if on BLM lands. The biological monitor would halt work if it is determined that active nests are being disturbed by construction activities and the appropriate agencies would be consulted.

  - Qualified biologists would relocate or remove bird nests only after young have fledged and perform any mitigation measures necessary to reduce or eliminate negative effects to birds inhabiting the construction area.

- A qualified biologist will conduct pre-construction surveys within 30 days prior to construction for Western Burrowing Owls within suitable habitat during the breeding

season (February 1 through August 31). All areas within 250 feet of the Proposed Project will be surveyed (if landowner access allows), per USFWS 2007 Burrowing Owl guidance.

- If an active nest is identified, there will be no construction activities within 250 feet of the Burrowing Owl nest location to prevent disturbance until the chicks have fledged or the nest has been abandoned, as determined by a qualified biologist. Buffers may be increased or reduced as needed with the approval of the BLM, and USFWS.

- The occurrence and location of any Western Burrowing Owls will be documented by biological monitors in daily reports and submitted to the authorized biologist on a daily basis. The authorized biologist will report all incidents of disturbance or harm to Burrowing Owls within 24 hours to the USFWS.

- Lighting would be designed to provide the minimum illumination needed to achieve O&M objectives and not emit excessive light to the night sky by installing light absorbing shields on top of all light fixtures, and focusing desired light in a downward direction (Reed et al. 1985). This would reduce the visibility of the lights to migratory birds traveling through the area. Downward facing lights would also reduce the number of insects attracted to lights resulting in a decrease of potential concentrated feeding areas for bats. Any additional lighting needed to perform activities such as repairs would be kept to a minimum and only used when these actions are in progress.

- The following measures are intended to mitigate potential impacts to Gila monsters:

  - Field workers and personnel will know how to: (1) identify Gila monsters and be able to distinguish it from other lizards such as chuckwallas and western banded geckos; (2) report any observations of Gila monsters to the Nevada Department of Wildlife (NDOW); (3) be alerted to the consequences of a Gila monster bite resulting from carelessness or unnecessary harassment; and (4) be aware of protective measures provided under state law.

  - Live Gila monsters found in harm's way on the project will be captured and then detained in a cool, shaded environment (<85°F) by the project biologist or equivalent personnel until a NDOW biologist can arrive for documentation, marking and obtaining biological measurements and samples prior to releasing. A clean 5- gallon plastic bucket with a secure, vented lid; an 18"x18"x4" plastic sweater box with a secure, vented lid; or, a tape-sealed cardboard box of similar dimension may be used for safe containment. Additionally, written information identifying the mapped capture location, GPS coordinates in Universal Transverse Mercator (UTM) using

the North American Datum (NAD) 83 Zone 11. Date, time, and circumstances (e.g. biological survey or construction) and habitat description (vegetation, slope, aspect, substrate) will also be provided to NDOW.

- Gila monsters found in harm's way along the gen-tie ROWs, pipeline ROW or access road would hazed off the immediate disturbance area and monitored. Written information identifying the mapped observation location, GPS coordinates in Universal Transverse Mercator (UTM) using the North American Datum (NAD) 83 Zone 11. Date, time, and circumstances (e.g. biological survey or construction) and habitat description (vegetation, slope, aspect, substrate) will also be provided to NDOW. The Gila monster may be captured using the methods outlined above if hazing is not effective or if the biologist determines that the individual has a high probability of returning to the project area.

- Injuries to Gila monsters may occur during excavation, road grading, or other construction activities. In the event a Gila monster is injured, it should be transferred to a veterinarian proficient in reptile medicine for evaluation and appropriate treatment. Rehabilitation or euthanasia expenses will not be covered by NDOW. However, NDOW will be immediately notified of any injury to a Gila monster and which veterinarian is providing care for the animal. If an animal is killed or found dead, the carcass will be immediately frozen and transferred to NDOW with a complete written description of the discovery and circumstances, date, time, habitat, and mapped location (GPS coordinates in UTM using NAD 83 Zone 11).

- Should NDOW's assistance be delayed, biological or equivalent acting personnel on site should detain the Gila monster out of harm's way until NDOW personnel can respond. The Gila monster should be detained until NDOW biologists have responded. Should NDOW not be immediately available to respond for photo- documentation, a digital camera will be used to take good quality images of the Gila monster in situ at the location of live encounter or dead salvage. The pictures will be provided to NDOW with specific location information including GPS coordinates, date, time and habitat description

- A Facility Decommissioning Plan would be finalized and provided to the Tribe, BIA, and BLM addressing the Project facilities under their respective management. This plan would be submitted for approval at least six months prior to commencement of site closure activities.

- Potential closure activities could include re-grading and restoration of original site contours and re-vegetation of areas disturbed by closure activities in accordance

with the Site Reclamation Plan. Revegetation seed mixes will be composed of native plant species.

- Any and all additional measures identified in the Biological Opinion to mitigate impacts to sensitive species will be implemented as prescribed.

The Applicant will be required to finalize the following management plans, which will be submitted to the Moapa Band of Paiutes, BIA, BLM, and USFWS (as appropriate) for approval:

- BBCS
- Weed Management Plan
- Raven Control Plan
- Decommissioning and Site Reclamation Plan
- Dust Abatement Plan
- Spill Prevention and Emergency Response Plan
- Health and Safety Program
- Fire Management Plan
- Hazardous Materials and Waste Management Plan
- Lighting Management Plan
- Project Restoration Plan
- SWPPP
- Site Drainage Plan
- Traffic Management Plan
- Surface Water Quality Management Plan
- Workers Environmental Awareness Program

5.5 Mitigation Measures – Cultural Resources

- A Memorandum of Agreement (MOA) between the Tribe, BIA, BLM, and SHPO will be required to define the steps that shall be taken to lessen, resolve, and/or mitigate the effects to the four historic properties identified as being adversely affected.

- Archaeological and Tribal monitors will be employed during construction to ensure that historic properties are not directly affected by the project.

- Fencing or other protective barriers will be placed to protect historic properties during construction as needed.

- Should any unrecorded and unanticipated cultural resources be discovered during construction, all activities within the immediate area of discovery shall cease. Any unanticipated discoveries of cultural resources or changes to the Project APE would

be managed in accordance with an *Unanticipated Discoveries Plan* that would be developed in consultation with the Tribe, BIA, BLM, and SHPO. Should any unrecorded cultural resources be discovered during construction, all activities within the immediate area of discovery would cease. The Chairman of the Moapa Tribal Council, or his or her designated representative, and the BIA Regional Archeologist shall be notified immediately and, consulting with BLM and SHPO as appropriate, they would make arrangements to assess the nature of discovered cultural resources and, if feasible, avoid the resources to the fullest extent practicable. If avoidance is not possible, the Applicant would minimize and mitigate any damages to any unanticipated discoveries before construction would resume in the immediate vicinity of the find/discovery.

5.6 Mitigation Measures – Transportation

The short-term impacts to traffic during construction would be reduced by implementing the following mitigation:

- A Traffic Management Plan would be finalized and approved by the Tribe and BIA that identifies BMPs to minimize construction-related traffic impacts.
- Deliveries of materials would be scheduled for off-peak hours, when practical, to reduce effects during periods of peak traffic.
- Truck traffic would be phased throughout construction, as much as practical.
- Carpooling or mass transportation options for construction workers would be encouraged.
- Before construction, the Applicant and agency representatives will document the pre-construction condition of the access route, noting any existing damage. After construction, any damage to public roads will be repaired to the road's pre-construction condition, as determined by the agency representatives.

5.7 Mitigation Measures – Public Health & Safety

The potential for exposure to hazards exists during transportation of materials, direct handling of substances, inadvertent release of hazardous material to the soil and groundwater, and general fire and electrical hazards. In addition to the previously discussed SPCC Plan, the Applicant would implement the following measures to reduce significant impact to public health and safety:

- General Design and Construction Standards - The Project would be designed in accordance with federal and industrial standards including the American Society of Mechanical Engineers (ASME), National Electrical Safety Code (NESC), International Energy Conservation Code (IECC), International Building Code (IBC), Uniform Plumbing Code (UPC), Uniform Mechanical Code (UMC), the National Fire Protection Association (NFPA) standards, and OSHA regulations.

- Health and Safety Program - All employees and contractors would be required to adhere to appropriate health and safety plans and emergency response plans. All contractors would be required to maintain and carry health and safety materials including the MSDS of hazardous materials used on site.

- Emergency Response Plan - An Emergency Response Plan would be developed and implemented based on the results of a comprehensive facility hazard analysis.

- Hazardous Waste Storage Plan - A Hazardous Waste Storage Plan would describe the storage, transportation, and handling of wastes and emphasize the recycling of construction wastes where possible.

- The Project would coordinate with the holders of all existing ROWs that would be crossed or paralleled by the Project ROWs (transmission lines, access roads, water pipeline) to minimize encroachment conflicts and possible effects to existing transmission lines and pipelines.

Chapter 6

Consultation and Coordination

CHAPTER 6
CONSULTATION AND COORDINATION

6.1 Summary of Public Scoping and Issue Identification

6.1.1 Public Scoping Period

On November 21, 2014, the BIA published the Notice of Intent (NOI) to prepare an EIS for the Proposed Aiya Solar Project in the Federal Register, Vol. 79, No. 225. The NOI announced a public scoping period for alternatives, issues, impacts, and planning criteria. A notice extending the public comment period to January 31, 2015 was subsequently published in the Federal Register (Vol 80, No. 18) and in local papers.

The BIA identified that the following resources would be evaluated during the NEPA study: air quality, geology and soils, surface and groundwater resources, biological resources, threatened and endangered species, cultural resources, socioeconomic conditions, land use, aesthetics, environmental justice, and Indian trust resources. Letters were also sent to federal, state, and local agencies, as well as individuals or organizations that could be interested or may be affected by the Proposed Project, to request their participation in the scoping process.

In addition, over 77 scoping letters were sent by the BIA on December 22, 2014 to other various non-governmental organizations and other interested stakeholders. The scoping letter briefly explained the project (including maps), outlined the federal review process, announced the public scoping meetings, and described the various ways to provide comments. A project website: http://www.AiyaSolarProjectEIS.com/ was also available to the public and provided project information as well as an online comment form.

The scoping letters, mailing lists, and other scoping materials are included in the Scoping Report included as **Appendix A**.

6.1.2 Scoping Meetings

To facilitate collection of the comments, the BIA held two public scoping meetings near the Proposed Project. Notices were published in the Moapa Valley Progress, Las Vegas Sun, and Las Vegas Review-Journal newspapers two weeks prior to the public meetings. **Appendix A** contains a copy of the scoping notice published in the papers.

The first meeting was held on the Reservation on January 14, 2015 from 5:30 pm until 7:30 pm. The first meeting had 26 attendees. The second meeting was held at the BLM North Las Vegas Office on January 15, 2015 from 5:30 pm until 7:30 pm. The second meeting had 14 attendees.

Figure 6-1 – Newspaper Notice

Public Meeting Announcement

The U.S. Bureau of Indian Affairs (BIA) and the Moapa Band of Paiute Indians invite you to attend a scoping meeting to help identify the range and scope of issues related to the proposed Aiya Solar Project. The issues identified during the scoping process will be considered and addressed during preparation of the Environmental Impact Statement (EIS).

Please plan to attend one of the following meetings:

Wednesday, January 14, 2015
Moapa River Indian Reservation Tribal Hall,
One Lincoln Street, Moapa, NV 89025-0340

Thursday, January 15, 2015
U.S. Bureau of Land Management (BLM) Conference Room,
4701 N. Torrey Pines Dr., Las Vegas, NV 89130

Both meetings will be held between 5:30 pm and 7:30 pm with a brief presentation at 5:45 pm. Light refreshments will be served.

The proposed Aiya Solar Project will have a capacity of 100 MW and will be located within the Moapa River Indian Reservation in Clark County, Nevada, west of Interstate 15 and approximately 40 miles northeast of Las Vegas. The project would also include a short electric transmission line that would cross BLM property to interconnect the project to the regional grid.

For more information on how to participate, contact *Mr. Chip Lewis, Regional Environmental Protection Officer, at Chip.Lewis@bia.gov (602.379.6782)* or *Mr. Paul Schlafly, Natural Resource Officer, at paul.schlafly@bia.gov (435.674.9720).*

The public scoping meetings started with an open house lasting approximately 30 minutes. Handouts were available for the public and posters on display described the project and EIS process. Attendees were able to ask questions to agency and project representatives while viewing posters. Following the open house, a formal presentation was provided. The program opened with Chairman Darren Daboda of the Moapa Band of Paiute Indians providing a brief history of the Reservation, what he envisions will be the future of his people and the importance of the Proposed Action to the Tribe. BIA agency staff members then introduced themselves and gave a presentation explaining the purpose and need of the EIS, EIS schedule, and the NEPA process. Following this, the EIS consultant presented the Proposed Action with an overview of the technical aspects and the environmental issues already identified to be addressed in the Draft EIS.

Following the presentation, the attendees were invited to provide verbal comments or ask questions about the Proposed Action. A court reporter was present at each of the two meetings to record the public comments expressed. The scoping meeting presentation, transcripts and public meeting summaries are provided in **Appendix A**.

In addition to verbal and written comments received during these scoping meetings, the BIA received 8 comment letters/forms through a variety of means.

6.1.3 Scoping Response

Transcripts and detailed meeting notes for the public scoping meetings can be found in the Scoping Report (**Appendix A**). **Table 1-2** in Chapter 1 provides a summary of the key issues identified in the comments provided during scoping for the Aiya Solar Project. These issues were the focus of the EIS analysis.

6.2 Public Participation Summary

6.2.1 Distribution of the Draft EIS

The DEIS review period was initiated by publication of the Notice of Availability (NOA) for the DEIS in the *Federal Register* on May 15, 2015. In addition, notices were placed in local newspapers and two public meetings were held to receive comments on the DEIS for the Proposed Project - one on the Reservation on June 17, 2015 and the other at the BLM offices located in Las Vegas, Nevada on June 18, 2015. Documents were also made available for public review at BIA Offices (Western Regional Office and Southern Paiute Agency) and the BLM office in Las Vegas. The DEIS was also available on the project Website http://www.AiyaSolarProjectEIS.com/ .

Appendix N outlines the comments received on the DEIS and provides a table summarizing responses to the comments and how they were addressed in this FEIS.

6.2.2 Final EIS Preparation and Distribution

The availability of the FEIS will also be announced by publication of the Notice of Availability (NOA) in the *Federal Register* and notices placed in local newspapers. The FEIS will also be made available for public review at BIA Offices (Western Regional Office and Southern Paiute Agency), the BLM office in Las Vegas, and on the project Website. In addition, copies will be sent, at their request, to any party who provides comments to the DEIS and/or requests that they be added to the mailing list.

The waiting period for the FEIS is 30 days following the date on which the NOA is published in the *Federal Register*. Comments made during the 30-day waiting period will be answered in the ROD.

6.2.3 Record of Decision

The BIA and BLM will each prepare a Record of Decision (ROD) – the BIA for their decision on the Lease Agreement and rights-of-way on Tribal lands and the BLM for the rights-of-way on federal lands managed by the BLM. The ROD will be posted on the project Website and will be mailed to the cooperating agencies and to the parties that requested a copy. Publication of the ROD will occur after the 30-day waiting period for the FEIS.

6.2.4 Appeal Rights

Within 30 days of the signing of the ROD, any adversely affected party could have the right of appeal, in accordance with the regulations in 43 CFR 4.400 unless the ROD is signed by the Secretary of the Interior.

6.3 Consultation with Others

6.3.1 Federal, State, and Local Agencies

The following federal, state, and local agencies were provided an opportunity to consult during preparation of the DEIS:

- Bureau of Indian Affairs (lead federal agency)
- Moapa Band of Paiute Indians (cooperating agency)
- Bureau of Land Management (cooperating agency)
- U.S. Fish and Wildlife Service (cooperating agency)
- US Environmental Protection Agency, Region 9 (cooperating agency)
- City of Mesquite
- Clark County Department of Comprehensive Planning
- Clark County Regional Flood Control District
- Conservation District of Southern Nevada
- Federal Aviation Administration
- Department of Defense (Nellis Air Force Base)
- National Park Service
- Nevada Department of Conservation and Natural Resources
- Nevada Department of Air Quality and Environmental Management
- Nevada Division of Environmental Protection
- Nevada Natural Heritage Program
- Nevada Energy

- Natural Resources Conservation Service (Mojave Special Projects Office)
- Nevada Department of Transportation
- U.S. Army Corps of Engineers
- Nevada Department of Wildlife
- Nevada State Historic Preservation Office
- Southern Nevada Water Authority
- The Honorable Dean Heller, US Senate
- The Honorable Harry Reid, US Senate
- The Honorable Dina Titus, US House of Representatives
- The Honorable Mark Amodei, US House of Representatives
- The Honorable Joe Heck, US House of Representatives

6.3.2 Non-Governmental Organizations

The following NGOs were provided an opportunity to consult during preparation of the EIS:

- The Nature Conservancy
- Red Rock Audubon Society
- Lahontan Audubon Society
- Desert Tortoise Council
- Friends of Nevada Wilderness
- Nevada Wilderness Project
- Sierra Club
- Center for Biological Diversity
- Sierra Nevada Alliance
- Nevada Clean Energy Campaign
- Center for Energy Efficiency and Renewable Technologies
- Desert Tortoise Council
- Environment America
- Great Basin Resource Watch
- Nevada Wildlife Federation
- Nevada Natural Resource Education Council
- Natural Resources Defense Council
- Nevada Conservation League
- Western Resource Advocates
- Environmental Defense Fund
- Conservation District of Southern Nevada
- The Conservation Alliance
- Friends of Gold Butte
- Union Pacific Railroad Company
- Kern River Pipeline
- Nevada Environmental Coalition, Inc.

Several NGOs, private citizens and several state and federal agencies provided comments during the public scoping period. See **Appendix A** for details on the comments received during scoping.

6.3.3 Native American Tribes

The following Tribes were given notice of the Proposed Project during the NOI phase:

- Las Vegas Paiute Tribe
- Kaibab Band of Paiute Indians
- Hualapai Indian Tribe
- Fort Mojave Indian Tribe
- Hopi Tribe
- Colorado River Indian Tribes
- Chemehuevi Indian Tribe
- Paiute Indian Tribe of Utah

The Hopi tribe responded. The Hopi indicated that they would be interested in further consultation if the Proposed Project would potentially have an adverse effect on National Register eligible prehistoric sites.

Chapter 7

List of Preparers and Reviewers

CHAPTER 7
LIST OF PREPARERS AND REVIEWERS

The following individuals participated in the preparation and review of the Aiya Solar Project EIS.

Name	Responsibility
Bureau of Indian Affairs, Western Regional Office	
Chip Lewis	BIA Project Lead / Acting Regional Environmental Protection Officer
Garry J. Cantley	Regional Archeologist
Tamera Dawes	Realty Specialist
Southern Paiute Agency	
Jim Williams	Agency Superintendent
Paul Schlafly	Natural Resource Specialist
Christina Varela	Realty Specialist
Moapa Band of Paiutes	
Darren Daboda	Chairman
BLM Las Vegas Office	
Greg Helseth	Renewable Energy
Stan Plum	Archaeologist
Melanie Cota	Biologist
National Park Service	
Amee Howard	Renewable Energy
Michael Taylor	National Historic Trails
US Environmental Protection Agency	
Karen Vitulano	Environmental Review
Thomas Plenys	Environmental Review
US Fish and Wildlife Service	
Michael Burroughs	Threatened and Endangered Species
Susan Cooper	Threatened and Endangered Species

Name	Responsibility
EIS Consultant	
Randy Schroeder	Project Manager
Jeanette Lostracco	Socioeconomics, Land Use
Patrick Golden	Biological Resources
Scott Yanco	Biological Resources
Matt Schweich	Water, Hydrology
Matt Kizlinski	Physical Resources
Mark Button	Visual Simulations
Rachel Clark	GIS Mapping
AJ Thompson, Knight & Leavitt	Cultural Resources
Nick Mathis	Hazardous Materials
Gordon Frisbie	Air Quality
OTHERS	
Grant L. Vaughn	DOI Solicitor
Patricia McCabe, LSD	Consultant to BIA
Nancy Shelton, LSD	Consultant to BIA
Diane Simpson-Colebank, LSD	Consultant to BIA
Ian Tackett, LSD	Consultant to BIA
Erin Davis, LSD	Consultant to BIA
Beau Goldstein	Consultant to BIA

Chapter 8

References

CHAPTER 8
REFERENCES

Aikens, C. M. 1966. Excavations in Southwest Utah. University of Utah Anthropological Papers No. 76, University of Utah, Salt Lake City.

Allison, J. R. 1996. Comments on the Impacts of Climatic Variability and Population Growth on Virgin Anasazi Cultural Development. American Antiquity 61(2):414–418.

Altschul, J. H., and H. C. Fairley. 1989. Man, Models, and Management: An Overview of the Archaeology of the Arizona Strip and the Management of its Cultural Resources. Statistical Research, Plateau Archaeology, and Dames & Moore, Inc., Phoenix.

Ambler, J. R., and M. Q. Sutton. 1989. The Anasazi Abandonment of the San Juan Drainage and the Numic Expansion. North American Archaeologist 10(1):39–53.

Argonne National Laboratory (ANL) and National Renewable Energy Laboratory (NREL). 2015. A Review of Avian Monitoring and Mitigation Information at Existing Utility-Scale Solar Facilities. U.S. Department of Energy, SunShot Initiative and Office of Energy Efficiency & Renewable Energy. http://www.evs.anl.gov/downloads/ANL-EVS_15-2.pdf

Avian Power Line Interaction Committee (APLIC). 2006. Suggested Practices for Avian Protection on Power Lines: the State of the Art in 2006.

APLIC. 2012. Reducing Avian Collision with Power Lines: The State of the Art in 2012: Edison Electric Institute and APLIC. Washington, D.C.

Bureau of Indian Affairs. U.S. Department of the Interior. 2012. NEPA Handbook. Available online at: www.bia.gov/cs/groups/xraca/documents/text/idc009157.pdf . 46pp.

Bureau of Indian Affairs. U.S. Department of the Interior. March 2012. Final Environmental Impact Statement K Road Moapa Solar Facility. http://www.blm.gov/nv/st/en/fo/lvfo/blm_programs/energy/k-road_moapa_solar.html .

Bureau of Indian Affairs. U.S. Department of the Interior. February 2014. Final Environmental Impact Statement for the Moapa Solar Energy Center. http://www.moapasolarenergycentereis.com/documents.html

Center for Biological Diversity. 1998. Petition to list the yellow-billed cuckoo *Coccyzus americanus* as a Federally Endangered Species. On line at http://www.biologicaldiversity.org/species/birds/yellow-billed_cuckoo/pdfs/petition.pdf. Accessed February 9, 2013.

Center for Biological Diversity. 2010. Saving the Las Vegas Buckwheat. http://www.biologicaldiversity.org/species/plants/Las_Vegas_buckwheat/index.html. Accessed November 29, 2012.

City of Las Vegas. 2013. History. Electronic Document http://www.lasvegasnevada.gov/factsstatistics/history.htm, accessed on 6 May 2015

Cole, W. Bryan, Annette J. (AJ) Thompson, and Bryandra M. Owen. 2015. *A Class III Cultural Resource Inventory of Approximately 1,190 Acres for a Solar Facility on the Moapa Band Paiutes Land, Clark County, Nevada*. Prepared for the Moapa Band of Paiutes, Bureau of Indian Affair, and the Bureau of Land Management on Behalf of First Solar. KL&A Report Number 14-0533.

CH2MHILL. 2010. Moapa Solar Energy Project Site Clark County, Nevada Request for Jurisdictional Determination. 84 pp.

Chu, Miyoko and Glenn Walsberg. 1999. Phainopepla (*Phainopepla nitens*), The Birds of North America Online (A. Poole, Ed.). Ithaca: Cornell Lab of Ornithology; Retrieved from the Birds of North America Online: http://bna.birds.cornell.edu/bna/species/415doi:10.2173/bna.415.

Clark County. 2007. Conservation Management Strategy: Mormon Mesa Desert Wildlife Management Area. 182 pp.

Clark County. 2014. Clark County Department of Air Quality. 2014 annual data for criteria pollutants. Online database located at: http://airquality.clarkcountynv.gov/cgi-bin/select_summary.pl. Accessed February 23, 2015.

Clark County. 2015. Clark County Department of Air Quality. Table: Designation Status Cited in 40 CFR 91.329. Delivered via email February 2015.

Council on Environmental Quality (CEQ). 1997a. Considering Cumulative Effects Under the National Environmental Policy Act. January1997.

CEQ. 1997b. Environmental Justice, Guidance Under the National Environmental Policy Act. December 10, 1997.

CEQ. 2010. Draft NEPA Guidance on Consideration of the Effects of Climate Change and Greenhouse Gas Emissions. February 18, 2010.

CEQ, 2014. Revised Draft Guidance for Greenhouse Gas Emissions and Climate Change Impacts, December 18, 2014, https://www.whitehouse.gov/administration/eop/ceq/initiatives/nepa/ghg-guidance .

Dalley, G. F. and D. A. McFadden. 1985. The Archaeology of the Red Cliffs Site. Bureau of Land Management, Utah, Cultural Resources Series No. 17, Salt Lake City.

Effland, R. W., Jr., R. C. Euler, and A. T. Jones. 1981. The Archaeology of Powell Plateau: Regional Interaction at Grand Canyon. Grand Canyon Natural History Association, Grand Canyon National Park.

Erickson, W.P., et al. 2014. "A Comprehensive Analysis of Small-Passerine Fatalities from Collision with Turbines at Wind Energy Facilities." PLoS ONE 9(9): e107491. doi:10.1371/journal.pone.0107491.

Euler, R. C., and S. Chandler. 1978. Aspects of Prehistoric Settlement Patterns in Grand Canyon. In Investigations of the Southwestern Anthropological Research Group: an Experimental in Archaeological Cooperation, edited by Robert C. Euler and George J. Gumerman, pp. 73–86. Museum of Northern Arizona, Flagstaff

Feller, Walter. No date. Mojave Desert Plants. http://mojavedesert.net/plants/. Accessed December 22, 2010.

Fenstermaker and Arnone. 2008.. Large Annual Net Ecosystem CO_2 Uptake of a Mojave Desert Ecosystem. Global Change Biology. Volume 14, Issue 7, pp. 1475-1487.

Furnis, C. Lynn. 2004. Getting By in Limbo: Clues About Life in a Southern Nevada Squatters' Camp. Bureau of Reclamation Report No. BR-73. Summit Envirosolutions, Inc., Carson City, Nevada.

Haury, E. W. 1986. Thoughts After Sixty Years as a Southwest Archaeologist. In Emil W. Haury's Prehistory of the Southwest, edited by J. Jefferson Reid and David E. Doyel, pp. 435–464. University of Arizona Press, Tucson.

Heizer, R. F. 1954. Notes on the Utah Utes, by Edward Palmer, 1866–1877. University of Utah Anthropological Papers No. 17, Salt Lake City.

Heritage Environmental Consultants. 2013. Desert Tortoise Survey Report – Moapa Solar Energy Project. January 2013. 43 pp.

Heritage Environmental Consultants. 2015. Jurisdictional Waters Report – Aiya Solar Project.

Intergovernmental Panel on Climate Change (IPCC). 2007. Third Assessment Report. Climate Change 2007: Synthesis Report.

Invasive Weed Awareness Coalition (IWAC). 2006. Research Aims to Save Desert Tortoise Habitat from Non-native Grasses and Wildfire. http://www.wssa.net/Weeds/Invasive/SuccessStories/NV%20Research%20aims%20to%20save%20desert%20tortoise%20habitat%20from%20non-native%20grasses%20and%20wildfire.pdf. Accessed December 12, 2012.

IPCC, 2014: Climate Change 2014: Synthesis Report. Contribution of Working Groups I, II and III to the Fifth Assessment Report of the Intergovernmental Panel on Climate Change [Core Writing Team, R.K. Pachauri and L.A. Meyer (eds.)]. IPCC, Geneva, Switzerland, 151 pp

Jacobson, E., D.V.M., Ph.D. 1992. Special Report prepared for the Desert Tortoise Preserve Committee, Inc. Rev. August 1992. http://www.tortoise-tracks.org/wptortoisetracks/the-desert-tortoise-and-upper-respiratory-tract-disease. Accessed March 15, 2013.

Jennings, J. D. 1978. Prehistory of Utah and the Eastern Great Basin. University of Utah Anthropological Papers No. 98, University of Utah Press, Salt Lake City.

Jennings, W. B. 1997.Habitat Use and Food Preferences of the Desert Tortoise, *Gopherus agassizii*, in the Western Mojave Desert and Impacts of Off-Road Vehicles. Proceedings: Conservation, Restoration, and Management of Tortoises and turtles; An International Conference, pp. 42-45.

Jones, A. T. 1986. A Cross Section of Grand Canyon Archaeology: Excavations at Five Sites Along the Colorado River. Western Archaeological and Conservation Center Publications in Anthropology No. 28, Tucson

Kelly, R. L. 1997. Late Holocene Great Basin Prehistory. Journal of World Prehistory 11(1):1–49.

Kelly, I. T. and C. S. Fowler. 1986. Southern Paiute. In Great Basin, edited by Warren L. D'Azevedo, pp. 1368-397. Handbook of North American Indians, Vol. 11, William C. Sturtevant, general editor, Smithsonian Institution, Washington, D.C.

Longcore, T., et al. 2013. "Avian Mortality at Communication Towers in the United States and Canada: Which Species, How Many, and Where?" Biological Conservation 158(February): 410–419. doi:10.1016/j.biocon.2012.09.019.

Louis Berger. 2015. Draft Conceptual Drainage Report - Moapa Aiya Solar Project. Unpublished.

Lyneis, M. M. 1992. The Main Ridge Community at Lost City: Virgin Anasazi Architecture, Ceramics, and Burials. Anthropological Papers No. 117. University of Utah Press, Salt Lake City.

Lyneis, M. M. 1995. The Virgin Anasazi, Far West Puebloans. Journal of World Prehistory 9(2):199–241.

Lyneis, M. M. 1996. Pueblo II-Pueblo III Change in Southwestern Utah, the Arizona Strip, and Southern Nevada. In The Prehistoric Pueblo World A.D. 1150–1350, edited by Michael Adler, pp. 11–28. University of Arizona Press, Tucson.

McCrary, M.D., R.L. McKernan, R.W. Schreiber, W.D. Wagner, and T.C. Sciarrotta. 1986. Avian Mortality at a Solar Energy Power Plant. Journal of Field Ornithology 57: 135-141.

Mifflin and Associates. 2013. Hydrogeologic Assessment and Groundwater Modeling Analyses for the Moapa Solar Energy Center. MSEC Final EIS Appendix.

Mifflin, M.D. 1968. Delineation of Ground-Water Flow Systems in Nevada. Technical Report Series H-W Hydrology and Water Resources Publication No. 4. Center for Water Resources Research. Desert Research Institute, University of Nevada System, Reno. July 1968.

Moapa Paiutes. 2014. The Moapa Band of Paiutes. Electronic Document http://www.moapapaiutes.com/about_us.htm, accessed 6 May 2015.

Moehring, Eugene P. 2000. Resort City in the Sunbelt: Las Vegas, 1930–2000. University of Nevada Press, Reno.

Moehring, Eugene P. and Michael S. Green. 2005. Las Vegas a Centennial History. University of Nevada Press, Reno.

National Wild and Scenic Rivers Council. 2015. River Mileage Classifications for Components of the National Wild and Scenic Rivers System. January 2015. 25 pages.

Natural Resources Conservation Service. United States Department of Agriculture. National Hydric Soils List by State, California and Nevada. Online at http://soils.usda.gov/use/hydric/lists/state.html. Accessed December 15, 2012.

Natural Resources Conservation Service. U.S. Department of Agriculture. 2006. Soil Survey of Clark County Area, Nevada. http://websoilsurvey.nrcs.usda.gov/app/. Accessed December 15, 2012.

Natural Resources Conservation Service. U.S. Department of Agriculture. Web Soil Survey. 2007. http://websoilsurvey.ncs.usda.gov. Accessed December 15, 2012.

Natural Resource Conservation Service. U.S. Department of Agriculture (NRCS USDA). 2013. "Conservation Practices that Save: Windbreaks/Shelterbelts". Available online at: http://www.nrcs.usda.gov/wps/portal/nrcs/detailfull/national/energy/conservation/?cid=nrcs143_023634

NatureServe 2009a. Species Explorer. http://www.natureserve.org/explorer/servlet/NatureServe?searchName=toxostoma+lecontei. Accessed March 30, 2013.

NatureServe 2009b.Species Explorer. http://www.natureserve.org/explorer/servlet/NatureServe?searchName=Aquila+chrysaetos. Accessed May 1, 2013.

Nevada Biological Consulting. June 2011. Biological Survey Report Moapa Solar Project, Clark County, Nevada. 33 pp.

Nevada Climate Change Advisory Committee, Office of the Governor. 2008. Nevada Climate Change Advisory Committee Office of the Governor. http://www.epa.gov/statelocalclimate/documents/pdf/nevada_final_report.pdf. Accessed December 15, 2012.

Nevada Department of Transportation (NDOT). 2013. Traffic Records Information Access data, http://apps.nevadadot.com/trina/. Accessed December 20, 2014.

NDOT Apex to Mesquite and Moapa Valley Corridor Study. 2011. Web site: https://www.nevadadot.com/Projects_and_Programs/Programs_and_Studies/Studies_and_Programs.aspx. Accessed December 20, 2014.

Nevada Department of Wildlife (NDOW). 2008. Keeping an Eye on Burrowing Owls. http://www.ndow.org/about/news/pr/102908_burrowing_owls.shtm. Accessed December 15, 2012.

NDOW. 2010. Nevada Fauna Facts: Burrowing Owl. http://www.ndow.org/wild/animals/facts/birds_owl_burrowing.shtm. Accessed December 15, 2012.

NDOW. 2012. Gila Monster Status, Identification and Reporting Protocol for Observations. http://www.ndow.org/uploadedFiles/ndoworg/Content/Wildlife_Education/Publications/2012-Gila-Monster-Status-Identification-Reporting-Protocol-Observations.pdf . Accessed November 2013.

NDOW. 2013. Re: Moapa Solar Project. Wildlife Resources in the Vicinity of the Moapa Solar Project Located in Clark County, Nevada. Personal Communication.

NDOW 2013. Nevada Wildlife Action Plan. http://www.ndow.org/Nevada_Wildlife/Conservation/Nevada_Wildlife_Action_Plan/ . Accessed December 20, 2013.

Nevada Division of Environmental Protection (NDEP). 2008. Nevada Statewide Greenhouse Gas Inventory and Projections, 1990-2030. On line at: http://ndep.nv.gov/baqp/datamgt/docs/GHG%20Report%202012.pdf. Accessed February 22, 2013.

NDEP. 2014. 2012 Water Quality Integrated Report with EPA Overlisting. Assessment Period October 1, 2006 through September 30, 2011. December 2014.

Nevada Division of Water Resources (NDWR). 2014. Designated Groundwater Basins of Nevada. October 2014.

Nevada Natural Heritage Program (NNHP). 2001. Rare Plant Fact Sheet: WHITEBEAR POPPY. www.heritage.**nv**.gov/sites/default/files/atlas/arctomerri.pdf. Accessed January 31, 2012.

NNHP. 2010. Plant and Animal At-Risk Tracking List. Department of Conservation and Natural Resources. http://heritage.nv.gov/sites/default/files/other_docs/track.pdf. Accessed December 15, 2012.

NNHP. 2013. The recorded endangered, threatened, candidate, and At Risk plant and animal elements (taxa) within the Moapa Solar Energy Center Project Area. Personal Communication.

Nevada Public Utilities Commission. New & Proposed Generation Plants in Nevada (Updated December 2012). http://puc.nv.gov/Utilities/Electric/Generation/. Accessed March 8, 2013.

Newton, C. 2007. A concentrated solar thermal energy system. Florida State University College of Engineering.

O'Neil, Floyd A. n.d. Peoples of Utah, The Utes. Electronic document http://historytogo.utah.gov/utah_chapters/american_indians/utahsfirstpeople.html, accessed 6 May 2015.

Paher Stanley W. 1980. Nevada Ghost Towns and Mining Camps. Howell-North Books, San Diego, California.

Powell, S. 1983. Mobility and Adaptation: The Anasazi of Black Mesa, Arizona. Southern Illinois University Press, Carbondale.

Paddock, M., J. Pullin, and C. Steele. 2015. Southern Nevada Impacts Associated with Tropical Moisture from Hurricane Norbert. Retrieved from https://ams.confex.com/ams/95Annual/webprogram/Handout/Paper271397/MJPaddock-AMS_2014Impacts.pdf.

Rafferty, Kevin. 1984. Cultural Resources Overview of the Las Vegas Valley. Bureau of Land Management Nevada. Contributions to the Study of Cultural Resources, Technical Report No. 13. Reno, Nevada.

Randall, J. M., S.S. Parker, J. Moore, B. Cohen, L. Crane, B. Christian, D. Cameron, J. MacKenzie, K. Klausmeyer and S. Morrison. 2010. Mojave Desert Ecoregional Assessment. Unpublished Report. The Nature Conservancy, San Francisco, California.106 pages + appendices. Available at: http://conserveonline.org/workspaces/mojave/documents/mojave-desert-ecoregional-2010/@@view.html.

Roberts, Heidi and J. H. Altschul. 2012. A Prehistoric Context for Southern Nevada. HRA, Inc. Archaeological Report No. 11-05, Las Vegas, Nevada

Southern California Soil & Testing, Inc. (SCST). 2015. Geotechnical Investigation Moapa Lytle Solar Plant Project, Moapa, Clark County, Nevada. January 2015.

Southern Nevada Water Authority (SNWA). 2015. Environmental Stewardship – Protecting the Muddy River. Web page: http://www.snwa.com/env/stewardship_muddy.html. Accessed February 6, 2015.

Spangenberg, E.K. 1995. Plants Eaten by Juvenile Desert Tortoises in the Central Mojave Desert. Paper presented at the National Biological Service Desert Tortoise Symposium, 1995. Internet site: http://www.tortoise-tracks.org/wptortoisetracks/about-the-desert-tortoise/plants-eaten-by-the-juvenile/. Accessed December 14, 2012.

Stevens, Joseph. 1988. Hoover Dam: an American Adventure. University of Oklahoma Press, Norman.

Stewart, J.H., and Carlson, J.E., 1978, Geologic Map of Nevada: U.S. Geological Survey and Nevada Bureau of Mines and Geology. http://mrdata.usgs.gov/geology/state/state.php?state=NV. Accessed December 20, 2014.

U.S. Army Corps of Engineers (USACE). 2008. A Field Guide to the Identification of the Ordinary High Water Mark (OHWM) in the Arid West Region of the Western United States – A Delineation Manual. Robert W. Lichvar and Shawn M. McColley. August 2008.

U.S. Census Bureau. Census 2000. http://factfinder.census.gov/home/saff/main.html?_lang=en. Accessed January 30 2015.

U.S. Census Bureau. Census 2010. http://factfinder.census.gov/home/saff/main.html?_lang=en. Accessed January 30 2015.

U.S. Department of Agriculture (USDA). 2010. Forest Service. Index of Species Information. http://www.fs.fed.us/database/feis/plants/shrub/ambdum/all.html. Accessed January 3, 2010.

USDA. 2012. Forest Service. Index of Species Information. http://www.fs.fed.us/database/feis/plants/shrub/yucsch/all.html. Accessed December 19, 2012.

U.S. Department of the Interior, Bureau of Land Management, Case Recordation, Serial Register Page. http://www.blm.gov/landandresourcesreports/rptapp/criteria_select.cfm?rptId=3&APPCD=2&. Accessed April 22, 2013.

U.S. Department of the Interior (DOI), Bureau of Land Management (BLM) and the U.S. Department of Energy (DOE). December 2010. Draft Programmatic Environmental Impact Statement for Solar Energy Development in Six Southwestern States.

U.S. Department of the Interior (DOI) Bureau of Land Management (BLM) and the U.S. Department of Energy (DOE). July 2012. Final Programmatic Environmental Impact Statement for Solar Energy Development in Six Southwestern States.

U.S. Environmental Protection Agency (USEPA). 2010. Approval and Promulgation of Implementation Plans and Designation of Areas for Air Quality Planning Purposes; State of Nevada; Redesignation of Las Vegas Valley to Attainment for the Carbon Monoxide Standard. 40 CFR Parts 52 and 81. September 27, 2010.

USEPA. 2012. National Ambient Air Quality Standards. Online at http://epa.gov/air/criteria.html. Accessed December 15, 2012.

USEPA. 2013a. Approvals and Promulgations of Implementation Plans; Designation of Areas for Air Quality Planning Purposes: Nevada; Redesignation of Clark County to Attainment for the 1997 8-Hour Ozone Standard. 40 CFR Parts 52 and 81. January 8, 2013.

USEPA. 2013b. Wind Fences for Erosion Control. http://cfpub.epa.gov/npdes/stormwater/menuofbmps/index.cfm?action=browse&Rbutton=detail&bmp=54. Accessed December 2013.

USEPA. 2014. Approval of Implementation Plans and Designation of Areas for Air Quality Planning Purposes; Las Vegas Valley, Nevada; Redesignation to Attainment for PM_{10}. 40 CFR Parts 52 and 81. September 17, 2014.

USEPA. 2015. National Ambient Air Quality Standards (NAAQS). Web page located at: http://epa.gov/air/criteria.html. Updated October 2011. Accessed February 19, 2015.

U.S. Fish and Wildlife Service (USFWS). 1994. Desert Tortoise Recovery Plan (Mojave Population). Portland, Oregon. 73 pp.

USFWS. 1995. Recovery Plan for the Rare Aquatic Species of the Muddy River Ecosystem. Portland, Oregon. 60 pp.

USFWS. 2007. Nevada Fish and Wildlife Office. Protecting Burrowing Owls at Construction Sites in Nevada's Mojave Desert Region. Las Vegas, Nevada.

USFWS. 2009. Preparing for any action that may occur within the range of the Mojave desert tortoise. (*Gopherus agassizii*).Region 8, Sacramento, California.15 pp.

USFWS. 2012 Species Data List Las Vegas Buckwheat. http://ecos.fws.gov/speciesProfile/profile/speciesProfile.action?spcode=Q3MG. Accessed December 2012.

USFWS 2011a. Species Data List. Gila Monster. http://www.fws.gov/mountain-prairie/species/reptiles/gilamonster/. Accessed December 2012.

USFWS. 2011b. Revised recovery plan for the Mojave population of the desert tortoise (*Gopherus agassizii*). U.S. Fish and Wildlife Service, Pacific Southwest Region, Sacramento, California. 222 pp.

USFWS. 2013a. Species by County Report. http://ecos.fws.gov/tess_public/countySearch!speciesByCountyReport.action?fips=32003. Accessed December 2013.

USFWS 2013b. Species Data List. Moapa Dace. http://www.fws.gov/nevada/protected_species/fish/species/moapa_dace.html. Accessed December 2013.

USFWS. 2013c. List of Threatened or Endangered Species in Nevada. http://ecos.fws.gov/tess_public/pub/stateListingAndOccurrenceIndividual.jsp?state=NV&s8fid=112761032792&s8fid=112762573902. Accessed January 31, 2013.

U.S. Geologic Survey (USGS). 2015a. Mineral Resources On-Line Spatial Data. Web page: http://mrdata.usgs.gov/geology/state/state.php?state=nv. Accessed February 5, 2015.

USGS. 2015b. Groundwater depth graph for USGS CSV-2, Site No. 364650114432001. Web database http://nwis.waterdata.usgs.gov/. Accessed February 13, 2015.

University of Las Vegas, Center for Business and Economic Research. 2014. Las Vegas/Clark County Economic Data. Web page: http://cber.unlv.edu/CCEconData.html. Accessed December 20, 2014.

Usufzy, P., and K. Visconti. 2014. Flooding forces several-day closure of Interstate 15 north of Las Vegas. Las Vegas Sun, September 8, 2014. Retrieved from http://www.lasvegassun.com/news/2014/sep/08/heavy-rain-hits-valley-flooding-roads-and-snarling/. Accessed January 26, 2015.

Walling, B. A., R. A. Thompson, G. F. Dalley, D. G. Weder, K. M. Heath, and L. W. Lindsay. 1986. Excavations At Quail Creek. Cultural Resource Series 20. 20 vols. Bureau of Land Management Utah, Salt Lake City, Utah.

Westfall, D. 1987. The Pinenut Site: Virgin Anasazi Archaeology on Kanab Plateau of Northwestern Arizona. Bureau of Land Management, Phoenix.