APPENDIX D

Typicals

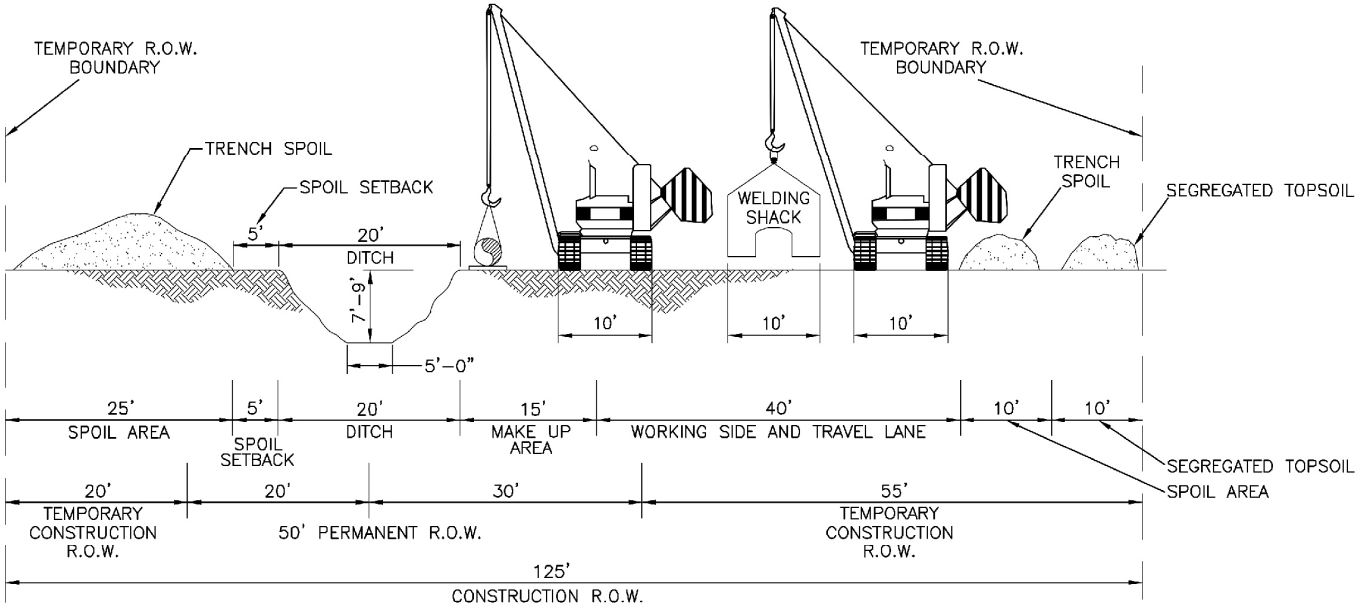

PROFILE
1"=20' HOR.
1"=20' VERT.

* DIMENSIONS ARE TYPICAL, SEE ALIGNMENT SHEETS FOR ACTUAL RIGHT-OF-WAY CONFIGURATIONS AND CLEARING LIMITS.

NOTES:

1. CONSTRUCTION RIGHT-OF-WAY WILL TYPICALLY BE 125 FEET WIDE CONSISTING OF 50 FEET OF PERMANENT EASEMENT AND 75 FEET OF TEMPORARY WORKSPACE. ADDITIONAL TEMPORARY WORKSPACE WILL BE NECESSARY AT ROAD, RAIL AND RIVER CROSSINGS AND OTHER SPECIAL CIRCUMSTANCES, AS REQUIRED. CERTAIN SITUATIONS MAY REQUIRE A NARROWER WIDTH.
2. LEAVE GAPS IN SPOIL PILES AT OBVIOUS DRAINAGE LOCATIONS. DO NOT PUSH UPLAND SOILS INTO CANALS OR WETLANDS.

Appendix D, Figure D - 1

Rover Pipeline Project - Typical Right-of-Way Configurations

Rover Pipeline Typical Upland Workspace Construction Area

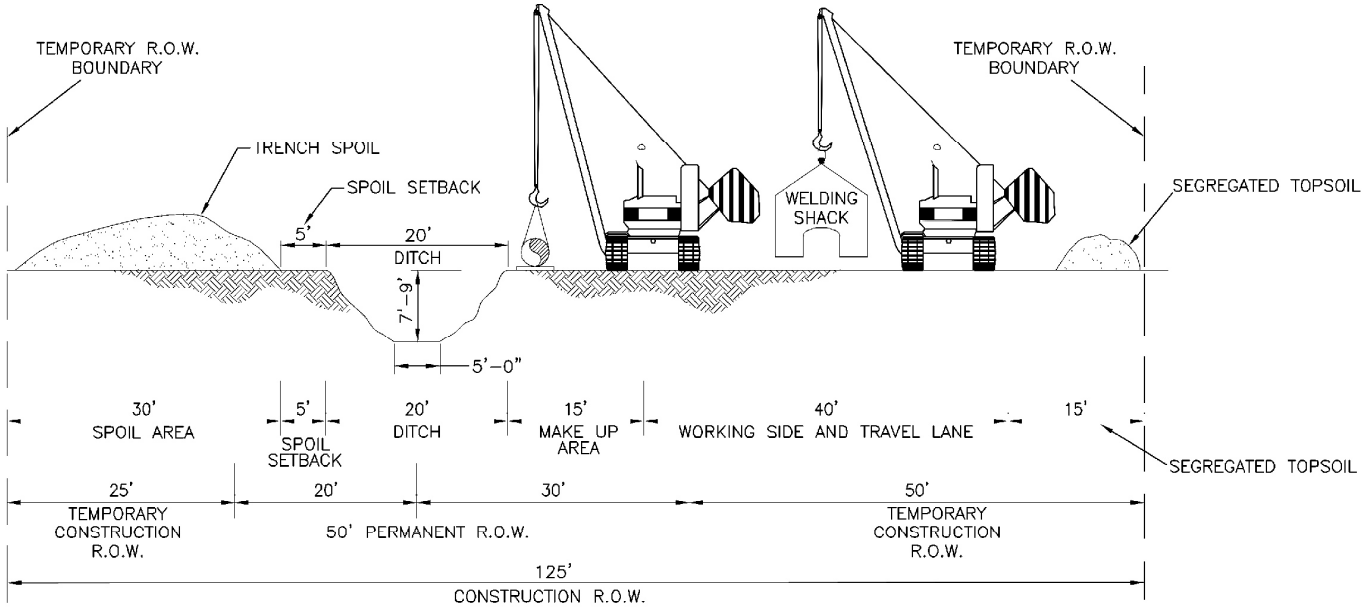

PROFILE
1"=20' HOR.
1"=20' VERT.

* DIMENSIONS ARE TYPICAL, SEE ALIGNMENT SHEETS FOR ACTUAL RIGHT-OF-WAY CONFIGURATIONS AND CLEARING LIMITS.

NOTES:

1. CONSTRUCTION RIGHT-OF-WAY WILL TYPICALLY BE 125 FEET WIDE CONSISTING OF 50 FEET OF PERMANENT EASEMENT AND 75 FEET OF TEMPORARY WORKSPACE. ADDITIONAL TEMPORARY WORKSPACE WILL BE NECESSARY AT ROAD, RAIL AND RIVER CROSSINGS AND OTHER SPECIAL CIRCUMSTANCES, AS REQUIRED. CERTAIN SITUATIONS MAY REQUIRE A NARROWER WIDTH.
2. LEAVE GAPS IN SPOIL PILES AT OBVIOUS DRAINAGE LOCATIONS. DO NOT PUSH UPLAND SOILS INTO CANALS OR WETLANDS.

Appendix D, Figure D - 2

Rover Pipeline Project - Typical Right-of-Way Configurations

Rover Pipeline Typical Upland Workspace Construction Area

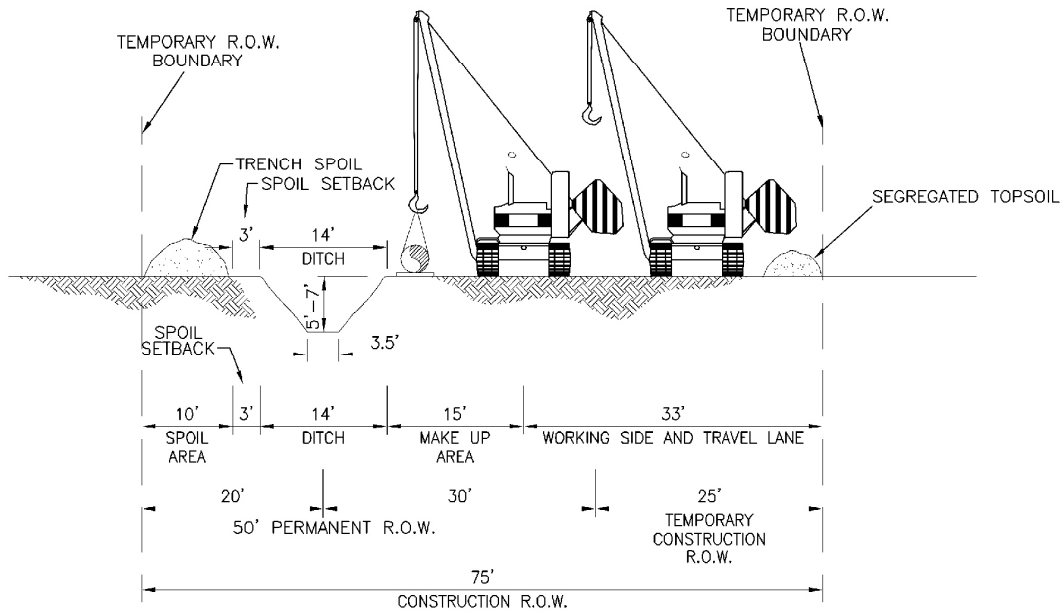

PROFILE
1"=20' HOR.
1"=20' VERT.

* DIMENSIONS ARE TYPICAL, SEE ALIGNMENT SHEETS FOR ACTUAL RIGHT-OF-WAY CONFIGURATIONS AND CLEARING LIMITS.

NOTES:

1. CONSTRUCTION RIGHT-OF-WAY WILL TYPICALLY BE 75 FEET WIDE CONSISTING OF 50 FEET OF PERMANENT EASEMENT AND 25 FEET OF TEMPORARY WORKSPACE. ADDITIONAL TEMPORARY WORKSPACE WILL BE NECESSARY AT ROAD, RAIL AND RIVER CROSSINGS AND OTHER SPECIAL CIRCUMSTANCES, AS REQUIRED. CERTAIN SITUATIONS MAY REQUIRE A NARROWER WIDTH.
2. LEAVE GAPS IN SPOIL PILES AT OBVIOUS DRAINAGE LOCATIONS. DO NOT PUSH UPLAND SOILS INTO CANALS OR WETLANDS.
3. PIPELINE WEIGHTS OF AN APPROPRIATE TYPE, WEIGHT AND SPACING WILL BE USED AS NEEDED.

Appendix D, Figure D - 3

Rover Pipeline Project - Typical Right-of-Way Configurations

Rover Pipeline 24" CGT, Berne & Majorsville Laterals Typical Upland & Wetland Workspace Construction Area

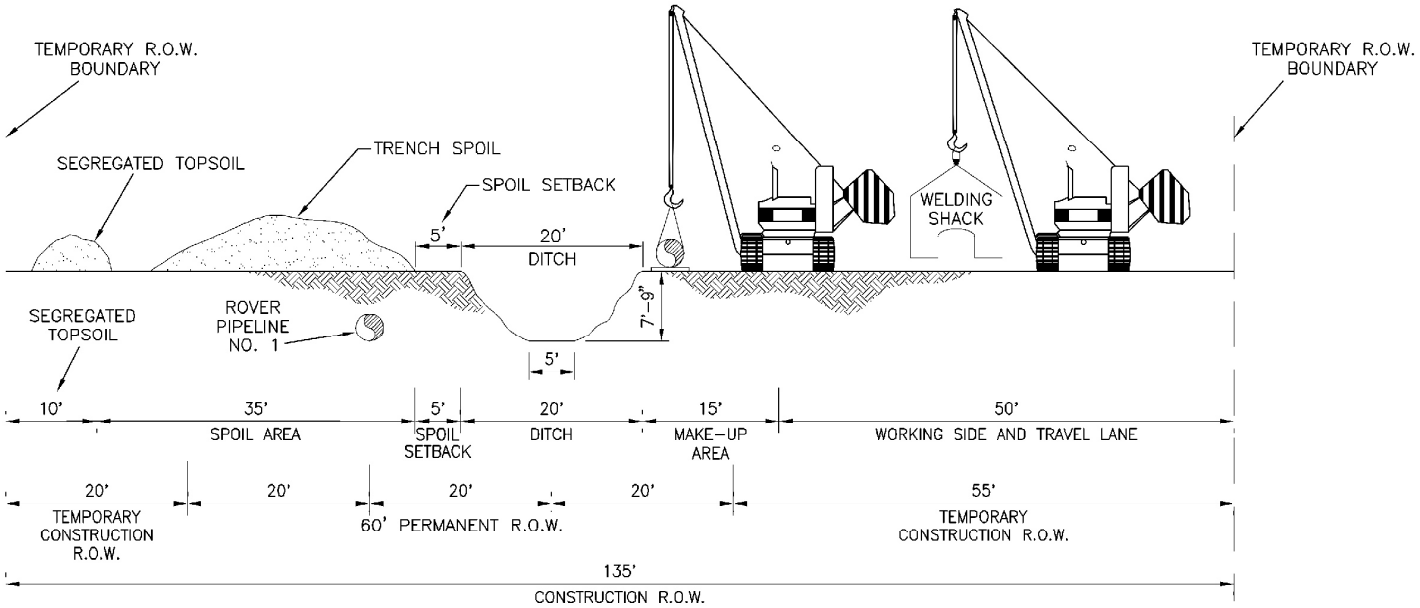

PROFILE
1"=20' HOR.
1"=20' VERT.

* DIMENSIONS ARE TYPICAL, SEE ALIGNMENT SHEETS FOR ACTUAL RIGHT-OF-WAY CONFIGURATIONS AND CLEARING LIMITS.

NOTES:

1. CONSTRUCTION RIGHT-OF-WAY WILL TYPICALLY BE 125 FEET WIDE CONSISTING OF 60 FEET OF PERMANENT EASEMENT AND 75 FEET OF TEMPORARY WORKSPACE TO ACCOMODATE EQUIPMENT FOR SECOND 42" PIPELINE. ADDITIONAL TEMPORARY WORKSPACE WILL BE NECESSARY AT ROAD, RAIL AND RIVER CROSSINGS AND OTHER SPECIAL CIRCUMSTANCES, AS REQUIRED. CERTAIN SITUATIONS MAY REQUIRE A NARROWER WIDTH.
2. LEAVE GAPS IN SPOIL PILES AT OBVIOUS DRAINAGE LOCATIONS. DO NOT PUSH UPLAND SOILS INTO CANALS OR WETLANDS.

Appendix D, Figure D - 4

Rover Pipeline Project - Typical Right-of-Way Configurations

Dual Rover Pipelines Typical Upland Workspace Construction Area

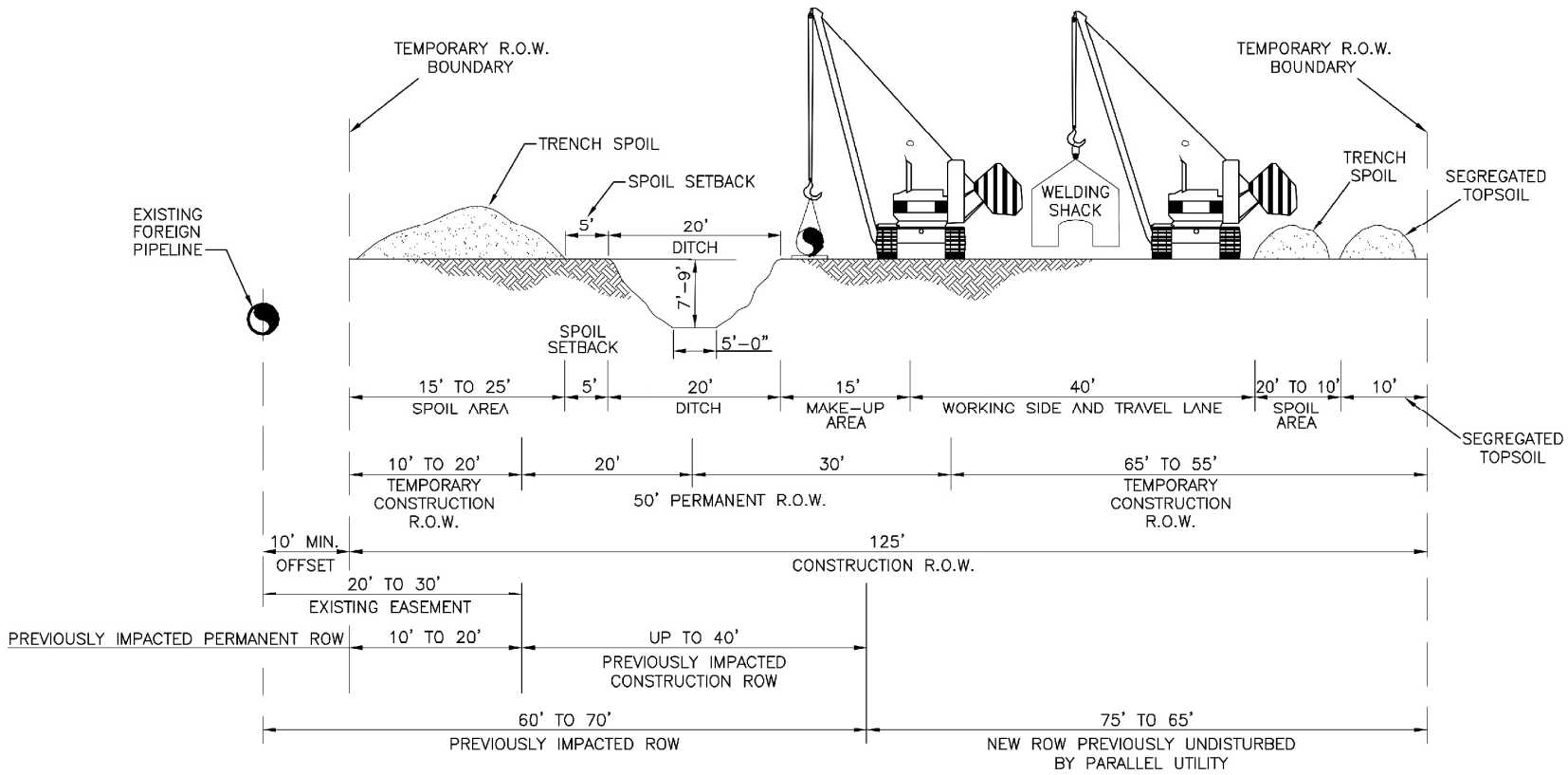

PROFILE
1"=20' HOR.
1"=20' VERT.

* DIMENSIONS ARE TYPICAL, SEE ALIGNMENT SHEETS FOR ACTUAL RIGHT-OF-WAY CONFIGURATIONS AND CLEARING LIMITS.

NOTES:

1. CONSTRUCTION RIGHT-OF-WAY WILL TYPICALLY BE 125 FEET WIDE CONSISTING OF 50 FEET OF PERMANENT EASEMENT AND 75 FEET OF TEMPORARY WORKSPACE. ADDITIONAL TEMPORARY WORKSPACE WILL BE NECESSARY AT ROAD, RAIL AND RIVER CROSSINGS AND OTHER SPECIAL CIRCUMSTANCES, AS REQUIRED. CERTAIN SITUATIONS MAY REQUIRE A NARROWER WIDTH.
2. LEAVE GAPS IN SPOIL PILES AT OBVIOUS DRAINAGE LOCATIONS. DO NOT PUSH UPLAND SOILS INTO CANALS OR WETLANDS.
3. THE OFFSET FROM FOREIGN PIPELINES MAY BE INCREASED OR DECREASED DEPENDING ON THE SITE SPECIFIC CONSTRUCTION REQUIREMENTS OR THE FOREIGN PIPELINE/UTILITY TO BE PARALLELED.
4. ROVER WILL UTILIZE UP TO 20 FEET OF THE FOREIGN PIPELINE'S EXISTING PERMANENT ROW AND UP TO 40 FEET OF THE FOREIGN PIPELINE'S PREVIOUSLY CLEARED CONSTRUCTION ROW FOR THE CONSTRUCTION AND OPERATION OF THE ETC ROVER PIPELINE. DEPENDING ON THE DIMENSIONS OF THE ABUTTING FOREIGN PIPELINE, THE PORTION OF THE ABUTTING ROW THAT WILL BE OVERLAPPED MAY VARY BASED UPON THE WIDTH OF THE FOREIGN PIPELINE'S PERMANENT EASEMENT AS WELL AS THE WIDTH OF THE PREVIOUSLY UTILIZED CONSTRUCTION FOOTPRINT TO INSTALL THE FOREIGN PIPELINE OR UTILITY. IN ALL CASES WHERE ETC ROVER ABUTS A FOREIGN UTILITY OR PIPELINE, ETC ROVER WILL UTILIZE AS MUCH OF THE FOREIGN UTILITY'S PREVIOUSLY CLEARED ROW AS POSSIBLE AND WILL UTILIZE THE AVAILABLE AREAS UP TO 10 FEET FROM THE CENTERLINE OF THE FOREIGN UTILITY OR PIPELINE.

Appendix D, Figure D - 5

Rover Pipeline Project - Typical Right-of-Way Configurations

Rover Pipeline Typical Upland Workspace 10' to 20' Overlap Construction Area, Parallel Foreign Pipeline

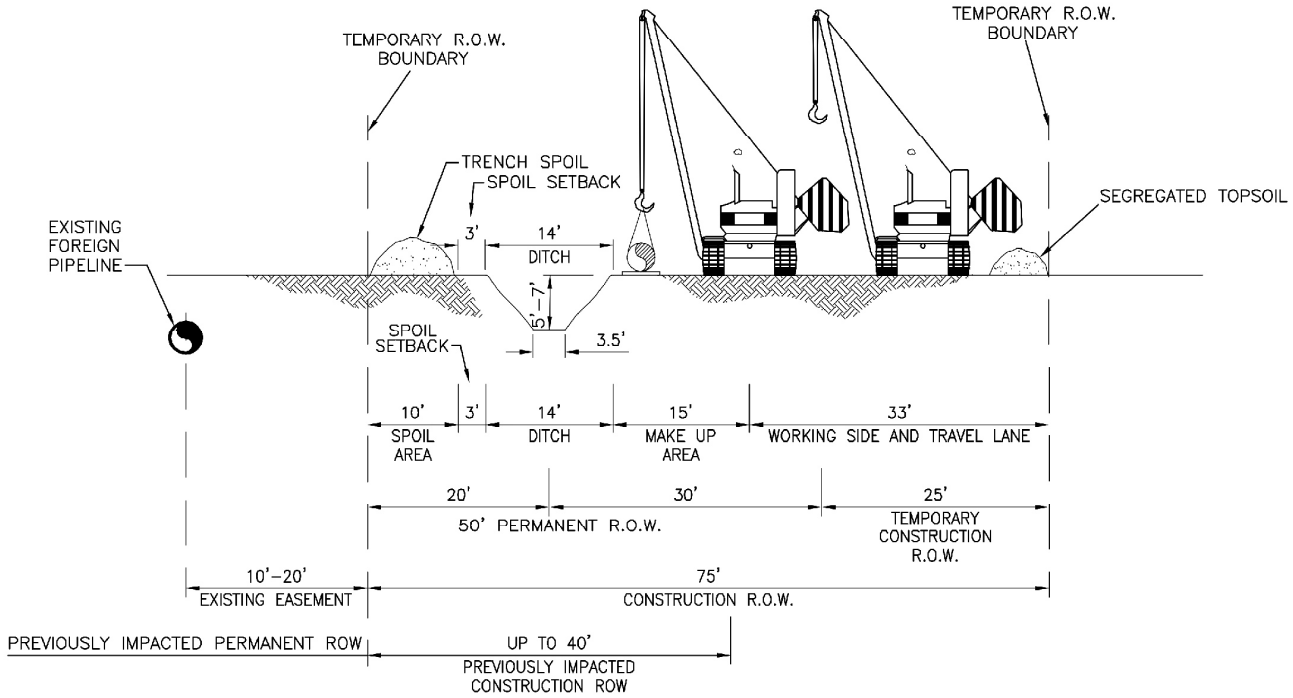

PROFILE
1"=20' HOR.
1"=20' VERT.

* DIMENSIONS ARE TYPICAL, SEE ALIGNMENT SHEETS FOR ACTUAL RIGHT-OF-WAY CONFIGURATIONS AND CLEARING LIMITS.

NOTES:

1. CONSTRUCTION RIGHT-OF-WAY WILL TYPICALLY BE 75 FEET WIDE CONSISTING OF 50 FEET OF PERMANENT EASEMENT AND 25 FEET OF TEMPORARY WORKSPACE. ADDITIONAL TEMPORARY WORKSPACE WILL BE NECESSARY AT ROAD, RAIL AND RIVER CROSSINGS AND OTHER SPECIAL CIRCUMSTANCES, AS REQUIRED. CERTAIN SITUATIONS MAY REQUIRE A NARROWER WIDTH.
2. LEAVE GAPS IN SPOIL PILES AT OBVIOUS DRAINAGE LOCATIONS. DO NOT PUSH UPLAND SOILS INTO CANALS OR WETLANDS.
3. THE OFFSET FROM FOREIGN PIPELINES MAY BE INCREASED OR DECREASED DEPENDING ON THE SITE SPECIFIC CONSTRUCTION REQUIREMENTS OR THE FOREIGN PIPELINE/UTILITY TO BE PARALLELED.
4. ROVER WILL UTILIZE UP TO 40 FEET OF THE FOREIGN PIPELINE'S PREVIOUSLY CLEARED CONSTRUCTION ROW FOR THE CONSTRUCTION AND OPERATION OF THE ETC ROVER PIPELINE.
5. PIPELINE WEIGHTS OF AN APPROPRIATE TYPE, WEIGHT AND SPACING WILL BE USED AS NEEDED.

Appendix D, Figure D - 6

Rover Pipeline Project - Typical Right-of-Way Configurations

Rover Pipeline 24" CGT, Berne & Majorsville Laterals Typical Upland & Wetland Workspace Construction Area, Parallel Foreign Pipeline

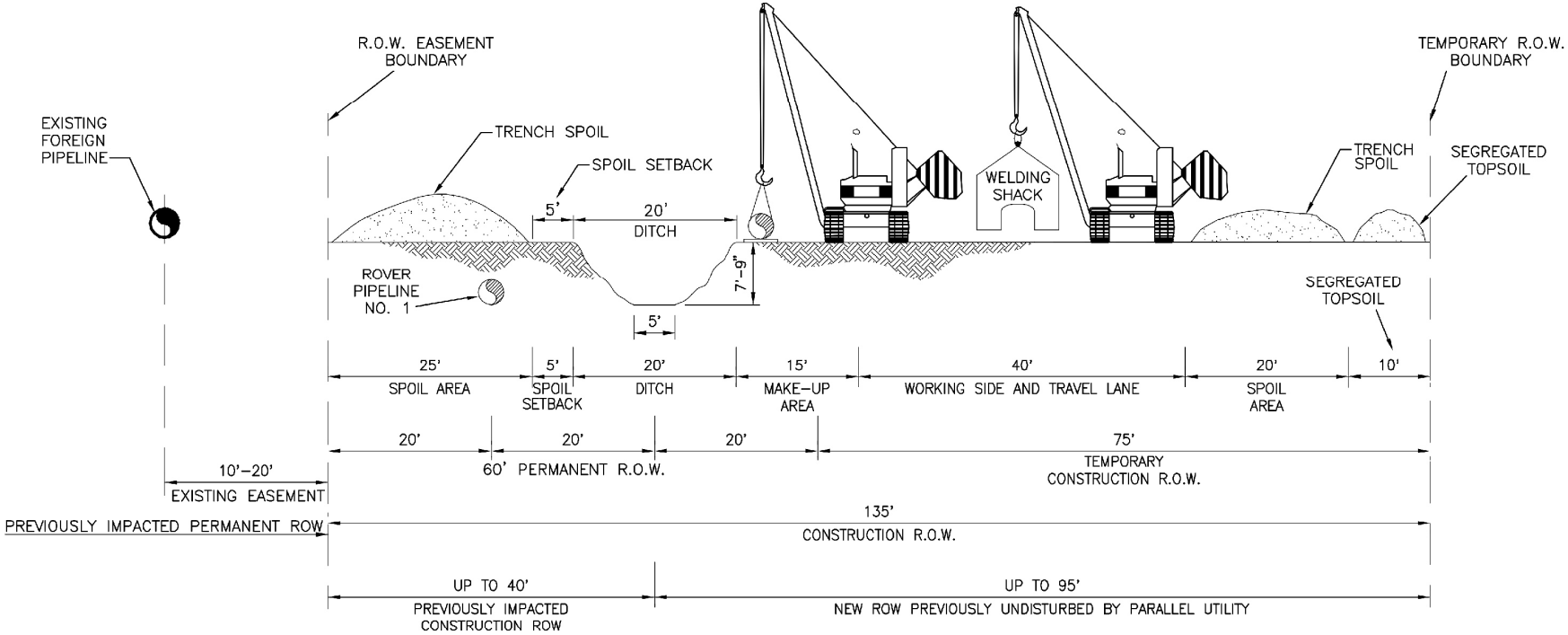

PROFILE

1"=20' HOR.
1"=20' VERT.

* DIMENSIONS ARE TYPICAL, SEE ALIGNMENT SHEETS FOR ACTUAL RIGHT-OF-WAY CONFIGURATIONS AND CLEARING LIMITS.

NOTES:

1. CONSTRUCTION RIGHT-OF-WAY WILL TYPICALLY BE 135 FEET WIDE CONSISTING OF 60 FEET OF PERMANENT EASEMENT AND 75 FEET OF TEMPORARY WORKSPACE. ADDITIONAL TEMPORARY WORKSPACE WILL BE NECESSARY AT ROAD, RAIL AND RIVER CROSSINGS AND OTHER SPECIAL CIRCUMSTANCES, AS REQUIRED. CERTAIN SITUATIONS MAY REQUIRE A NARROWER WIDTH.
2. LEAVE GAPS IN SPOIL PILES AT OBVIOUS DRAINAGE LOCATIONS. DO NOT PUSH UPLAND SOILS INTO CANALS OR WETLANDS.
3. THE OFFSET FROM FOREIGN PIPELINES MAY BE INCREASED OR DECREASED DEPENDING ON THE SITE SPECIFIC CONSTRUCTION REQUIREMENTS OR THE FOREIGN PIPELINE/UTILITY TO BE PARALLELED.
4. ROVER WILL UTILIZE UP TO 40 FEET OF THE FOREIGN PIPELINE'S PREVIOUSLY CLEARED CONSTRUCTION ROW FOR THE CONSTRUCTION AND OPERATION OF THE ETC ROVER PIPELINE.

Appendix D, Figure D - 7

Rover Pipeline Project - Typical Right-of-Way Configurations

Dual Rover Pipelines Typical Upland Workspace No Overlap Construction Area Parallel Foreign Pipeline

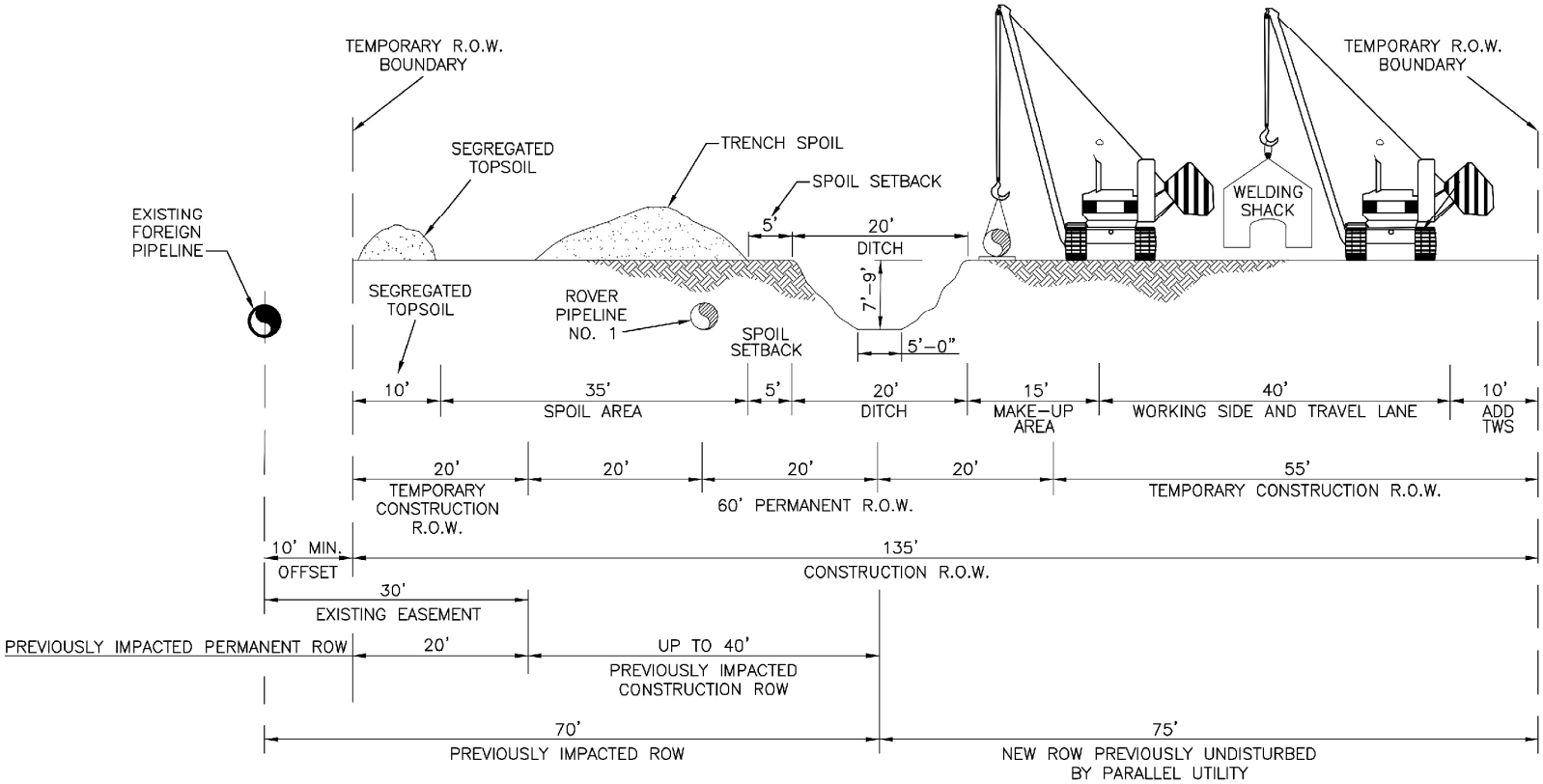

PROFILE

1"=20' HOR.
1"=20' VERT.

* DIMENSIONS ARE TYPICAL, SEE ALIGNMENT SHEETS FOR ACTUAL RIGHT-OF-WAY CONFIGURATIONS AND CLEARING LIMITS.

NOTES:

1. CONSTRUCTION RIGHT-OF-WAY WILL TYPICALLY BE 135 FEET WIDE CONSISTING OF 60 FEET OF PERMANENT EASEMENT AND 75 FEET OF TEMPORARY WORKSPACE. ADDITIONAL TEMPORARY WORKSPACE WILL BE NECESSARY AT ROAD, RAIL AND RIVER CROSSINGS AND OTHER SPECIAL CIRCUMSTANCES, AS REQUIRED. CERTAIN SITUATIONS MAY REQUIRE A NARROWER WIDTH.
2. LEAVE GAPS IN SPOIL PILES AT OBVIOUS DRAINAGE LOCATIONS. DO NOT PUSH UPLAND SOILS INTO CANALS OR WETLANDS.
3. THE OFFSET FROM FOREIGN PIPELINES MAY BE INCREASED OR DECREASED DEPENDING ON THE SITE SPECIFIC CONSTRUCTION REQUIREMENTS OR THE FOREIGN PIPELINE/UTILITY TO BE PARALLELED.
4. ROVER WILL UTILIZE UP TO 20 FEET OF THE FOREIGN PIPELINE'S EXISTING PERMANENT ROW AND UP TO 40 FEET OF THE FOREIGN PIPELINE'S PREVIOUSLY CLEARED CONSTRUCTION ROW FOR THE CONSTRUCTION AND OPERATION OF THE ETC ROVER PIPELINE. DEPENDING ON THE DIMENSIONS OF THE ABUTTING FOREIGN PIPELINE, THE PORTION OF THE ABUTTING ROW THAT WILL BE OVERLAPPED MAY VARY BASED UPON THE WIDTH OF THE FOREIGN PIPELINE'S PERMANENT EASEMENT AS WELL AS THE WIDTH OF THE PREVIOUSLY UTILIZED CONSTRUCTION FOOTPRINT TO INSTALL THE FOREIGN PIPELINE OR UTILITY. IN ALL CASES WHERE ETC ROVER ABUTS A FOREIGN UTILITY OR PIPELINE, ETC ROVER WILL UTILIZE AS MUCH OF THE FOREIGN UTILITY'S PREVIOUSLY CLEARED ROW AS POSSIBLE AND WILL UTILIZE THE AVAILABLE AREAS UP TO 10 FEET FROM THE CENTERLINE OF THE FOREIGN UTILITY OR PIPELINE.

Appendix D, Figure D - 8

Rover Pipeline Project - Typical Right-of-Way Configurations

Dual Rover Pipelines Typical Upland Workspace 20' Overlap Construction Area Parallel Foreign Pipeline

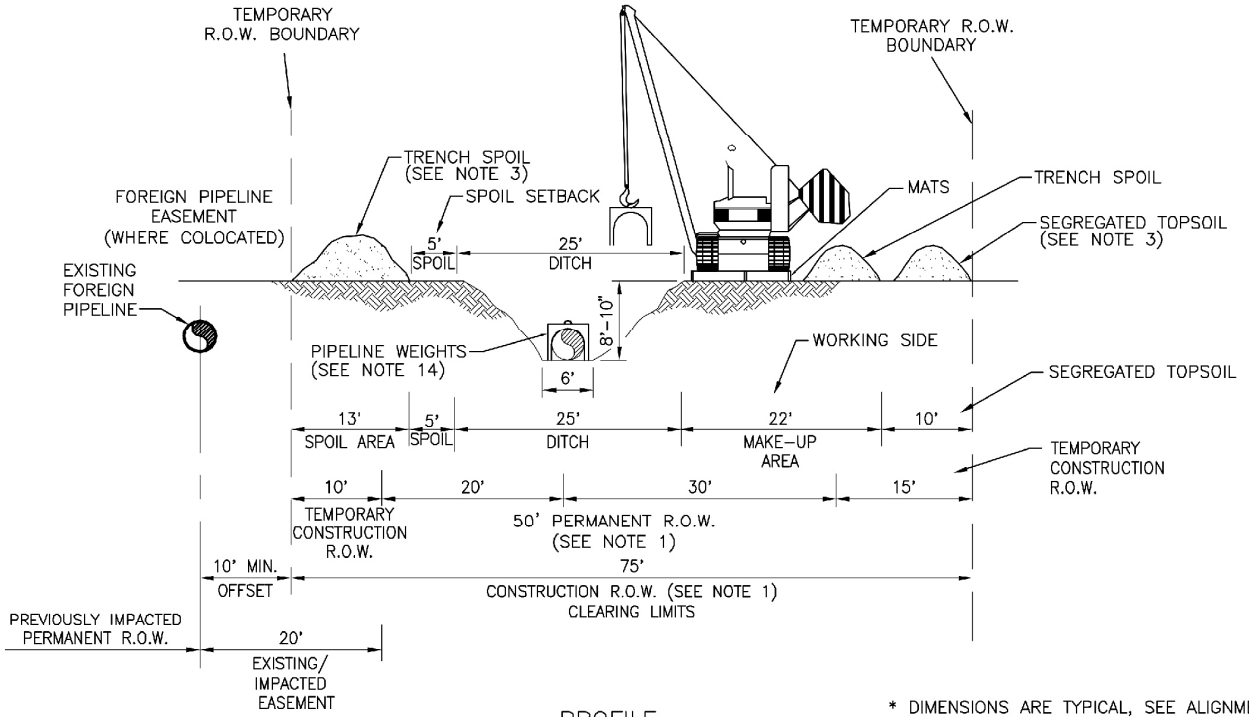

PROFILE
1"=20' HOR.
1"=20' VERT.

* DIMENSIONS ARE TYPICAL, SEE ALIGNMENT SHEETS FOR ACTUAL RIGHT-OF-WAY CONFIGURATIONS AND CLEARING LIMITS.

NOTES:

1. CONSTRUCTION RIGHT-OF-WAY WILL BE 75 FEET IN WETLANDS. ADDITIONAL TEMPORARY WORKSPACE WILL BE NECESSARY AT ROAD, RAIL AND RIVER CROSSINGS AND OTHER SPECIAL CIRCUMSTANCES, AS REQUIRED. CERTAIN SITUATIONS MAY REQUIRE A NARROWER WIDTH.
2. EQUIPMENT MATS OR LOW GROUND WEIGHT EQUIPMENT SHALL BE USED IN SATURATED CONDITIONS.
3. UTILIZE THE "TRENCH ONLY" TOPSOIL SALVAGE METHOD IF NECESSARY. IF TOPSOIL SEGREGATION IS REQUIRED, THIS AREA WILL BE USED FOR TOPSOIL AND TRENCH SPOIL, WITH ANY REMAINING TRENCH SPOIL TEMPORARILY HAULED OFF ROW AND RETURNED FOR BACK FILLING.
4. DEPTH OF TOPSOIL TRENCHING NOT TO EXCEED 12 INCHES EXCEPT WHERE DEEPER STRIPPING IS STIPULATED BY THE CONSTRUCTION LINE LIST OR CONSTRUCTION ALIGNMENT SHEETS.
5. INSTALL SILT FENCE ALONG DOWNSTREAM SIDE OF THE CONSTRUCTION R.O.W.
6. LEAVE GAPS IN SPOIL PILES AT OBVIOUS DRAINAGE LOCATIONS. DO NOT PUSH UPLAND SOILS INTO CANALS OR WETLANDS. DO NOT USE TOPSOIL FOR PADDING.
7. AVOID SCALPING VEGETATED GROUND SURFACE WHEN BACKFILLING SPOIL AND TOPSOIL PILES.
8. TOPSOIL AND TRENCH SPOIL RELATIVE POSITIONS CAN, AS APPROVED BY THE ENVIRONMENTAL INSPECTOR, BE REVERSED. KEEP TOPSOIL CLEAN OF ALL CONSTRUCTION DEBRIS.
9. CUT VEGETATION AND TREES OFF AT GROUND LEVEL, LEAVING EXISTING ROOT SYSTEMS IN PLACE AND REMOVE CUTTINGS FROM THE WETLAND FOR DISPOSAL.
10. LIMIT THE PULLING OF STUMPS AND GRADING TO THE TRENCH AREA. DO NOT GRADE OR REMOVE STUMPS OR ROOT SYSTEMS FROM THE REST OF THE RIGHT-OF-WAY UNLESS REQUIRED BY SAFETY-RELATED CONSTRUCTION CONSTRAINT. TRAVEL THROUGH WETLAND WILL BE LIMITED TO ONE PASS TO CONSTRUCT THE WETLAND TRAVEL LANE.
11. FOLLOWING BACKFILLING OF THE PIPELINE DITCH AND PRIOR TO THE FINAL PIPELINE RIGHT-OF-WAY RESTORATION, A CROWN OF NO GREATER THAN 6 INCHES WILL BE INSTALLED ACROSS THE PIPELINE DITCH IN SATURATED WETLAND SOIL CONDITIONS OR RESTORED PRE-CONSTRUCTION GRADE.
12. IN UNSATURATED CONDITIONS, SPOIL FROM THE WETLAND TRENCH MAY BE USED TO STABILIZE THE WORKING SIDE.
13. REMOVE TIMBER RIPRAP OR EQUIPMENT MATS FROM THE WETLANDS UPON COMPLETION OF CONSTRUCTION.
14. PIPELINE WEIGHTS OF AN APPROPRIATE TYPE, WEIGHT AND SPACING WILL BE USED AS NEEDED.
15. CONTACT ENVIRONMENTAL INSPECTOR (EI) TO REVIEW/APPROVE CLEARING LIMITS PRIOR TO STARTING WORK.

Appendix D, Figure D - 9

Rover Pipeline Project - Typical Right-of-Way Configurations

Rover Pipeline Typical Forested Wetland Crossing 10' Overlap Construction Area

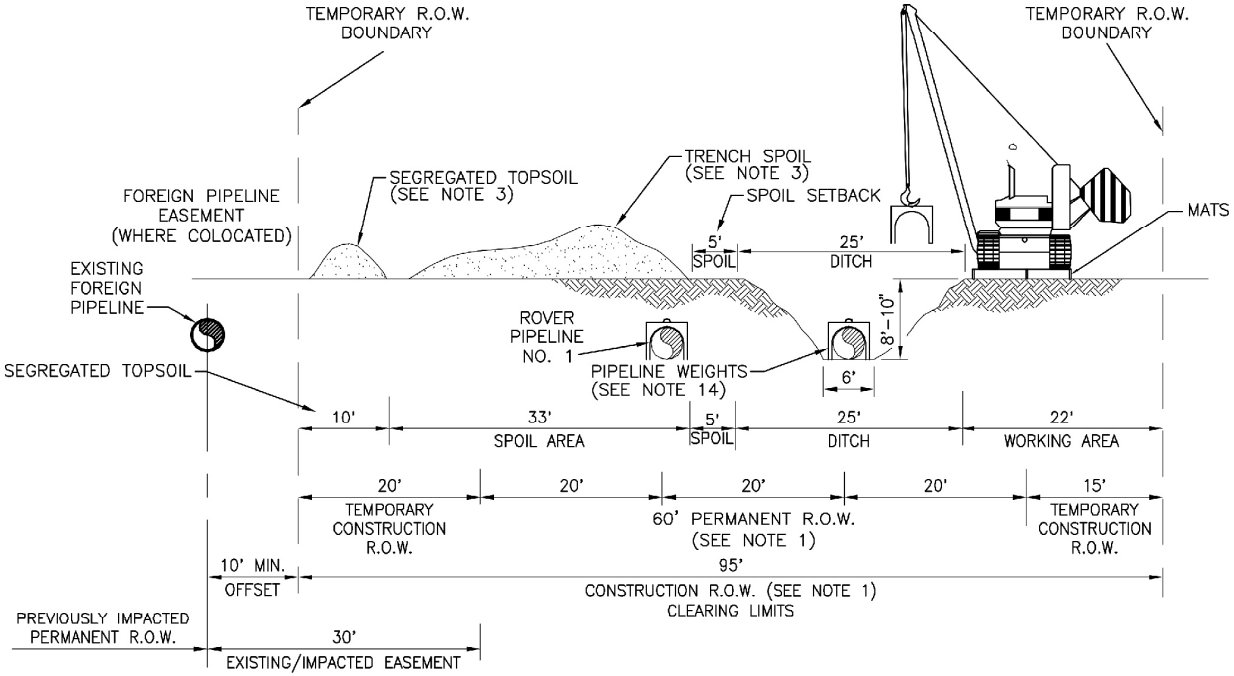

PROFILE
1"=20' HOR.
1"=20' VERT.

* DIMENSIONS ARE TYPICAL, SEE ALIGNMENT SHEETS FOR ACTUAL RIGHT-OF-WAY CONFIGURATIONS AND CLEARING LIMITS.

NOTES:

1. CONSTRUCTION RIGHT-OF-WAY WILL BE 95 FEET IN WETLANDS FOR THE DUAL PIPELINE CASE AND 20' OF OVERLAP. ADDITIONAL TEMPORARY WORKSPACE WILL BE NECESSARY AT ROAD, RAIL AND RIVER CROSSINGS AND OTHER SPECIAL CIRCUMSTANCES, AS REQUIRED. CERTAIN SITUATIONS MAY REQUIRE A NARROWER WIDTH.
2. EQUIPMENT MATS OR LOW GROUND WEIGHT EQUIPMENT SHALL BE USED IN SATURATED CONDITIONS.
3. UTILIZE THE "TRENCH ONLY" TOPSOIL SALVAGE METHOD IF NECESSARY. IF TOPSOIL SEGREGATION IS REQUIRED, THIS AREA WILL BE USED FOR TOPSOIL AND TRENCH SPOIL, WITH ANY REMAINING TRENCH SPOIL TEMPORARILY HAULED OFF ROW AND RETURNED FOR BACK FILLING.
4. DEPTH OF TOPSOIL TRENCHING NOT TO EXCEED 12 INCHES EXCEPT WHERE DEEPER STRIPPING IS STIPULATED BY THE CONSTRUCTION LINE LIST OR CONSTRUCTION ALIGNMENT SHEETS.
5. INSTALL SILT FENCE ALONG DOWNSTREAM SIDE OF THE CONSTRUCTION R.O.W.
6. LEAVE GAPS IN SPOIL PILES AT OBVIOUS DRAINAGE LOCATIONS. DO NOT PUSH UPLAND SOILS INTO CANALS OR WETLANDS. DO NOT USE TOPSOIL FOR PADDING.
7. AVOID SCALPING VEGETATED GROUND SURFACE WHEN BACKFILLING SPOIL AND TOPSOIL PILES.
8. TOPSOIL AND TRENCH SPOIL RELATIVE POSITIONS CAN, AS APPROVED BY THE ENVIRONMENTAL INSPECTOR, BE REVERSED. KEEP TOPSOIL CLEAN OF ALL CONSTRUCTION DEBRIS.
9. CUT VEGETATION AND TREES OFF AT GROUND LEVEL, LEAVING EXISTING ROOT SYSTEMS IN PLACE AND REMOVE CUTTINGS FROM THE WETLAND FOR DISPOSAL.
10. LIMIT THE PULLING OF STUMPS AND GRADING TO THE TRENCH AREA. DO NOT GRADE OR REMOVE STUMPS OR ROOT SYSTEMS FROM THE REST OF THE RIGHT-OF-WAY UNLESS REQUIRED BY SAFETY-RELATED CONSTRUCTION CONSTRAINT. TRAVEL THROUGH WETLAND WILL BE LIMITED TO ONE PASS TO CONSTRUCT THE WETLAND TRAVEL LANE.
11. FOLLOWING BACKFILLING OF THE PIPELINE DITCH AND PRIOR TO THE FINAL PIPELINE RIGHT-OF-WAY RESTORATION, A CROWN OF NO GREATER THAN 6 INCHES WILL BE INSTALLED ACROSS THE PIPELINE DITCH IN SATURATED WETLAND SOIL CONDITIONS OR RESTORED PRE-CONSTRUCTION GRADE.
12. IN UNSATURATED CONDITIONS, SPOIL FROM THE WETLAND TRENCH MAY BE USED TO STABILIZE THE WORKING SIDE.
13. REMOVE TIMBER RIPRAP OR EQUIPMENT MATS FROM THE WETLANDS UPON COMPLETION OF CONSTRUCTION.
14. PIPELINE WEIGHTS OF AN APPROPRIATE TYPE, WEIGHT AND SPACING WILL BE USED AS NEEDED.
15. CONTACT ENVIRONMENTAL INSPECTOR (EI) TO REVIEW/APPROVE CLEARING LIMITS PRIOR TO STARTING WORK.

Appendix D, Figure D - 10

Rover Pipeline Project - Typical Right-of-Way Configurations

Dual Rover Pipelines Typical Forested Wetland Crossing 20' Overlap Construction Area

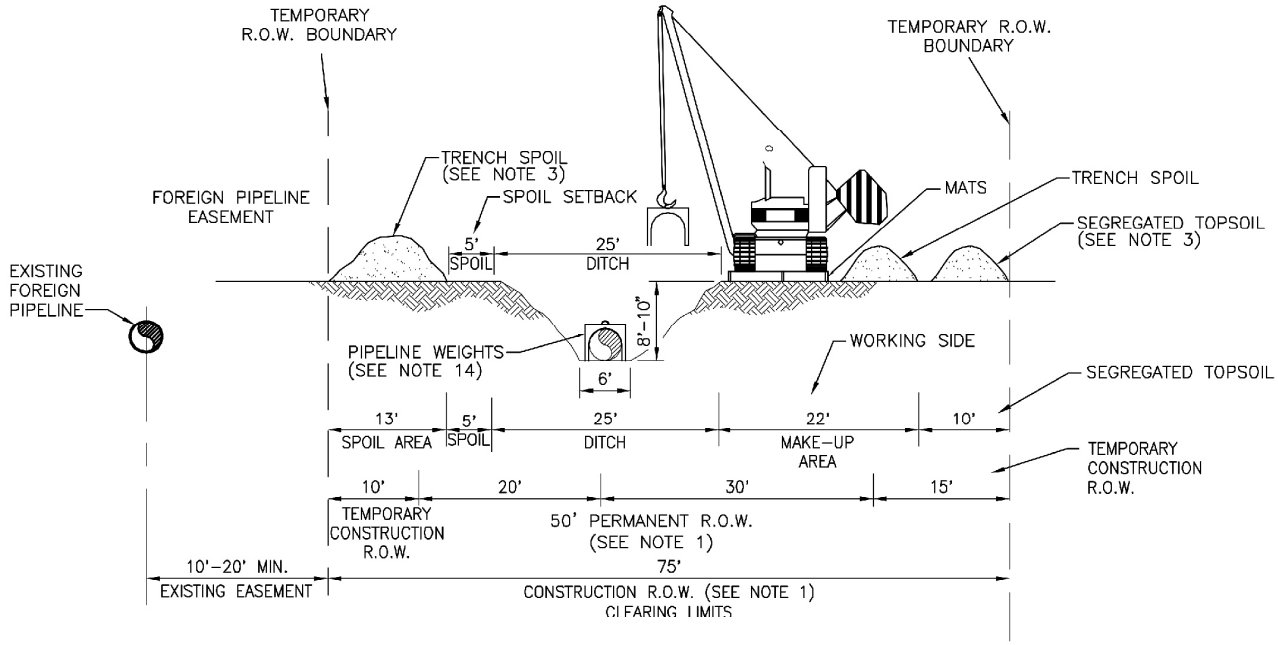

PROFILE
1"=20' HOR.
1"=20' VERT.

* DIMENSIONS ARE TYPICAL, SEE ALIGNMENT SHEETS FOR ACTUAL RIGHT-OF-WAY CONFIGURATIONS AND CLEARING LIMITS.

NOTES:

1. CONSTRUCTION RIGHT-OF-WAY WILL BE 75 FEET IN WETLANDS. ADDITIONAL TEMPORARY WORKSPACE WILL BE NECESSARY AT ROAD, RAIL AND RIVER CROSSINGS AND OTHER SPECIAL CIRCUMSTANCES, AS REQUIRED. CERTAIN SITUATIONS MAY REQUIRE A NARROWER WIDTH.
2. EQUIPMENT MATS OR LOW GROUND WEIGHT EQUIPMENT SHALL BE USED IN SATURATED CONDITIONS.
3. UTILIZE THE "TRENCH ONLY" TOPSOIL SALVAGE METHOD IF NECESSARY. IF TOPSOIL SEGREGATION IS REQUIRED, THIS AREA WILL BE USED FOR TOPSOIL AND TRENCH SPOIL, WITH ANY REMAINING TRENCH SPOIL TEMPORARILY HAULED OFF ROW AND RETURNED FOR BACK FILLING.
4. DEPTH OF TOPSOIL TRENCHING NOT TO EXCEED 12 INCHES EXCEPT WHERE DEEPER STRIPPING IS STIPULATED BY THE CONSTRUCTION LINE LIST OR CONSTRUCTION ALIGNMENT SHEETS.
5. INSTALL SILT FENCE ALONG DOWNSTREAM SIDE OF THE CONSTRUCTION R.O.W.
6. LEAVE GAPS IN SPOIL PILES AT OBVIOUS DRAINAGE LOCATIONS. DO NOT PUSH UPLAND SOILS INTO CANALS OR WETLANDS. DO NOT USE TOPSOIL FOR PADDING.
7. AVOID SCALPING VEGETATED GROUND SURFACE WHEN BACKFILLING SPOIL AND TOPSOIL PILES.
8. TOPSOIL AND TRENCH SPOIL RELATIVE POSITIONS CAN, AS APPROVED BY THE ENVIRONMENTAL INSPECTOR, BE REVERSED. KEEP TOPSOIL CLEAN OF ALL CONSTRUCTION DEBRIS.
9. CUT VEGETATION AND TREES OFF AT GROUND LEVEL, LEAVING EXISTING ROOT SYSTEMS IN PLACE AND REMOVE CUTTINGS FROM THE WETLAND FOR DISPOSAL.
10. LIMIT THE PULLING OF STUMPS AND GRADING TO THE TRENCH AREA. DO NOT GRADE OR REMOVE STUMPS OR ROOT SYSTEMS FROM THE REST OF THE RIGHT-OF-WAY UNLESS REQUIRED BY SAFETY-RELATED CONSTRUCTION CONSTRAINT. TRAVEL THROUGH WETLAND WILL BE LIMITED TO ONE PASS TO CONSTRUCT THE WETLAND TRAVEL LANE.
11. FOLLOWING BACKFILLING OF THE PIPELINE DITCH AND PRIOR TO THE FINAL PIPELINE RIGHT-OF-WAY RESTORATION, A CROWN OF NO GREATER THAN 6 INCHES WILL BE INSTALLED ACROSS THE PIPELINE DITCH IN SATURATED WETLAND SOIL CONDITIONS OR RESTORED PRE-CONSTRUCTION GRADE.
12. IN UNSATURATED CONDITIONS, SPOIL FROM THE WETLAND TRENCH MAY BE USED TO STABILIZE THE WORKING SIDE.
13. REMOVE TIMBER RIPRAP OR EQUIPMENT MATS FROM THE WETLANDS UPON COMPLETION OF CONSTRUCTION.
14. PIPELINE WEIGHTS OF AN APPROPRIATE TYPE, WEIGHT AND SPACING WILL BE USED AS NEEDED.
15. CONTACT ENVIRONMENTAL INSPECTOR (EI) TO REVIEW/APPROVE CLEARING LIMITS PRIOR TO STARTING WORK.

Appendix D, Figure D - 11

Rover Pipeline Project - Typical Right-of-Way Configurations

Rover Pipeline Typical Forested Wetland Crossing No Overlap Construction Area

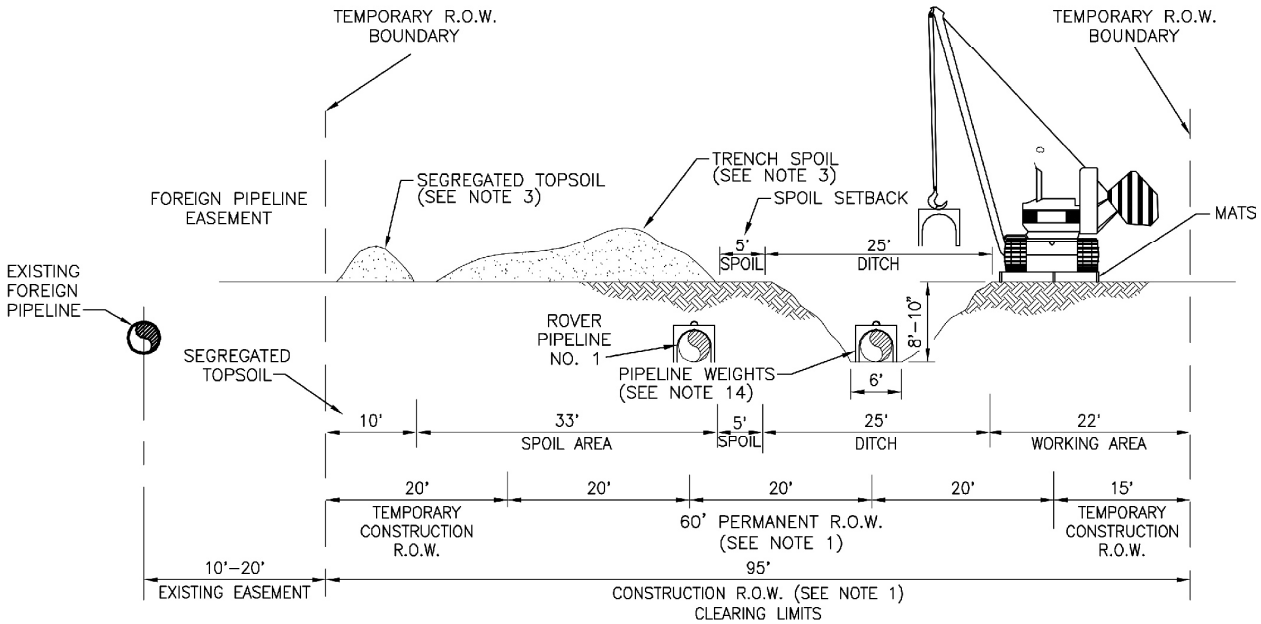

PROFILE
1"=20' HOR.
1"=20' VERT.

* DIMENSIONS ARE TYPICAL, SEE ALIGNMENT SHEETS FOR ACTUAL RIGHT-OF-WAY CONFIGURATIONS AND CLEARING LIMITS.

NOTES:

1. CONSTRUCTION RIGHT-OF-WAY WILL BE 95 FEET IN WETLANDS FOR THE DUAL PIPELINE CASE. ADDITIONAL TEMPORARY WORKSPACE WILL BE NECESSARY AT ROAD, RAIL AND RIVER CROSSINGS AND OTHER SPECIAL CIRCUMSTANCES, AS REQUIRED. CERTAIN SITUATIONS MAY REQUIRE A NARROWER WIDTH.
2. EQUIPMENT MATS OR LOW GROUND WEIGHT EQUIPMENT SHALL BE USED IN SATURATED CONDITIONS.
3. UTILIZE THE "TRENCH ONLY" TOPSOIL SALVAGE METHOD IF NECESSARY. IF TOPSOIL SEGREGATION IS REQUIRED, THIS AREA WILL BE USED FOR TOPSOIL AND TRENCH SPOIL, WITH ANY REMAINING TRENCH SPOIL TEMPORARILY HAULED OFF ROW AND RETURNED FOR BACK FILLING.
4. DEPTH OF TOPSOIL TRENCHING NOT TO EXCEED 12 INCHES EXCEPT WHERE DEEPER STRIPPING IS STIPULATED BY THE CONSTRUCTION LINE LIST OR CONSTRUCTION ALIGNMENT SHEETS.
5. INSTALL SILT FENCE ALONG DOWNSTREAM SIDE OF THE CONSTRUCTION R.O.W.
6. LEAVE GAPS IN SPOIL PILES AT OBVIOUS DRAINAGE LOCATIONS. DO NOT PUSH UPLAND SOILS INTO CANALS OR WETLANDS. DO NOT USE TOPSOIL FOR PADDING.
7. AVOID SCALPING VEGETATED GROUND SURFACE WHEN BACKFILLING SPOIL AND TOPSOIL PILES.
8. TOPSOIL AND TRENCH SPOIL RELATIVE POSITIONS CAN, AS APPROVED BY THE ENVIRONMENTAL INSPECTOR, BE REVERSED. KEEP TOPSOIL CLEAN OF ALL CONSTRUCTION DEBRIS.
9. CUT VEGETATION AND TREES OFF AT GROUND LEVEL, LEAVING EXISTING ROOT SYSTEMS IN PLACE AND REMOVE CUTTINGS FROM THE WETLAND FOR DISPOSAL.
10. LIMIT THE PULLING OF STUMPS AND GRADING TO THE TRENCH AREA. DO NOT GRADE OR REMOVE STUMPS OR ROOT SYSTEMS FROM THE REST OF THE RIGHT-OF-WAY UNLESS REQUIRED BY SAFETY-RELATED CONSTRUCTION CONSTRAINT. TRAVEL THROUGH WETLAND WILL BE LIMITED TO ONE PASS TO CONSTRUCT THE WETLAND TRAVEL LANE.
11. FOLLOWING BACKFILLING OF THE PIPELINE DITCH AND PRIOR TO THE FINAL PIPELINE RIGHT-OF-WAY RESTORATION, A CROWN OF NO GREATER THAN 6 INCHES WILL BE INSTALLED ACROSS THE PIPELINE DITCH IN SATURATED WETLAND SOIL CONDITIONS OR RESTORED PRE-CONSTRUCTION GRADE.
12. IN UNSATURATED CONDITIONS, SPOIL FROM THE WETLAND TRENCH MAY BE USED TO STABILIZE THE WORKING SIDE.
13. REMOVE TIMBER RIPRAP OR EQUIPMENT MATS FROM THE WETLANDS UPON COMPLETION OF CONSTRUCTION.
14. PIPELINE WEIGHTS OF AN APPROPRIATE TYPE, WEIGHT AND SPACING WILL BE USED AS NEEDED.
15. CONTACT ENVIRONMENTAL INSPECTOR (EI) TO REVIEW/APPROVE CLEARING LIMITS PRIOR TO STARTING WORK.

Appendix D, Figure D - 12

Rover Pipeline Project - Typical Right-of-Way Configurations

Dual Rover Pipelines Typical Forested Wetland Crossing No Overlap Construction Area

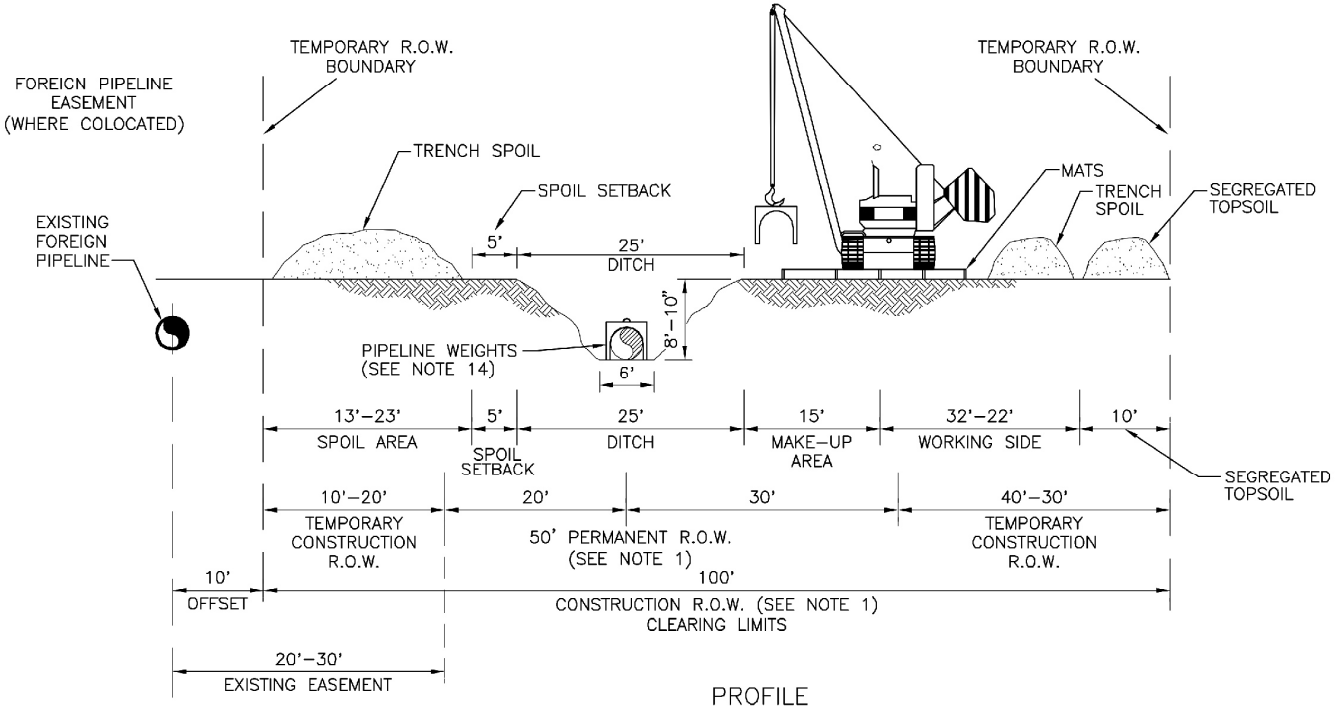

PROFILE
1"=20' HOR.
1"=20' VERT.

* DIMENSIONS ARE TYPICAL, SEE ALIGNMENT SHEETS FOR ACTUAL RIGHT-OF-WAY CONFIGURATIONS AND CLEARING LIMITS.

NOTES:

1. CONSTRUCTION RIGHT-OF-WAY WILL BE 100 FEET IN WETLANDS CONSISTING OF 50 FEET OF PERMANENT EASEMENT AND 50 FEET OF TEMPORARY WORKSPACE. ADDITIONAL TEMPORARY WORKSPACE WILL BE NECESSARY AT ROAD, RAIL AND RIVER CROSSINGS AND OTHER SPECIAL CIRCUMSTANCES, AS REQUIRED. CERTAIN SITUATIONS MAY REQUIRE A NARROWER WIDTH.
2. EQUIPMENT MATS OR LOW GROUND WEIGHT EQUIPMENT SHALL BE USED IN SATURATED CONDITIONS.
3. UTILIZE THE "TRENCH ONLY" TOPSOIL SALVAGE METHOD.
4. DEPTH OF TOPSOIL TRENCHING NOT TO EXCEED 12 INCHES EXCEPT WHERE DEEPER STRIPPING IS STIPULATED BY THE CONSTRUCTION LINE LIST OR CONSTRUCTION ALIGNMENT SHEETS.
5. INSTALL SILT FENCE ALONG DOWNSTREAM SIDE OF THE CONSTRUCTION R.O.W.
6. LEAVE GAPS IN SPOIL PILES AT OBVIOUS DRAINAGE LOCATIONS. DO NOT PUSH UPLAND SOILS INTO CANALS OR WETLANDS. DO NOT USE TOPSOIL FOR PADDING.
7. AVOID SCALPING VEGETATED GROUND SURFACE WHEN BACKFILLING SPOIL AND TOPSOIL PILES.
8. TOPSOIL AND TRENCH SPOIL RELATIVE POSITIONS CAN, AS APPROVED BY THE ENVIRONMENTAL INSPECTOR, BE REVERSED. KEEP TOPSOIL CLEAN OF ALL CONSTRUCTION DEBRIS.
9. CUT VEGETATION AND TREES OFF AT GROUND LEVEL, LEAVING EXISTING ROOT SYSTEMS IN PLACE AND REMOVE CUTTINGS FROM THE WETLAND FOR DISPOSAL.
10. LIMIT THE PULLING OF STUMPS AND GRADING TO THE TRENCH AREA. DO NOT GRADE OR REMOVE STUMPS OR ROOT SYSTEMS FROM THE REST OF THE RIGHT-OF-WAY UNLESS REQUIRED BY SAFETY-RELATED CONSTRUCTION CONSTRAINT. TRAVEL THROUGH WETLAND WILL BE LIMITED TO ONE PASS TO CONSTRUCT THE WETLAND TRAVEL LANE.
11. FOLLOWING BACKFILLING OF THE PIPELINE DITCH AND PRIOR TO THE FINAL PIPELINE RIGHT-OF-WAY RESTORATION, A CROWN OF NO GREATER THAN 6 INCHES WILL BE INSTALLED ACROSS THE PIPELINE DITCH IN SATURATED WETLAND SOIL CONDITIONS OR RESTORED PRE-CONSTRUCTION GRADE.
12. IN UNSATURATED CONDITIONS, SPOIL FROM THE WETLAND TRENCH MAY BE USED TO STABILIZE THE WORKING SIDE.
13. REMOVE TIMBER RIPRAP OR EQUIPMENT MATS FROM THE WETLANDS UPON COMPLETION OF CONSTRUCTION.
14. PIPELINE WEIGHTS OF AN APPROPRIATE TYPE, WEIGHT AND SPACING WILL BE USED AS NEEDED.

Appendix D, Figure D - 13

Rover Pipeline Project - Typical Right-of-Way Configurations

Rover Pipeline Typical Wetland Crossing (Non-Forested Only)
10'-20' Overlap Construction Area

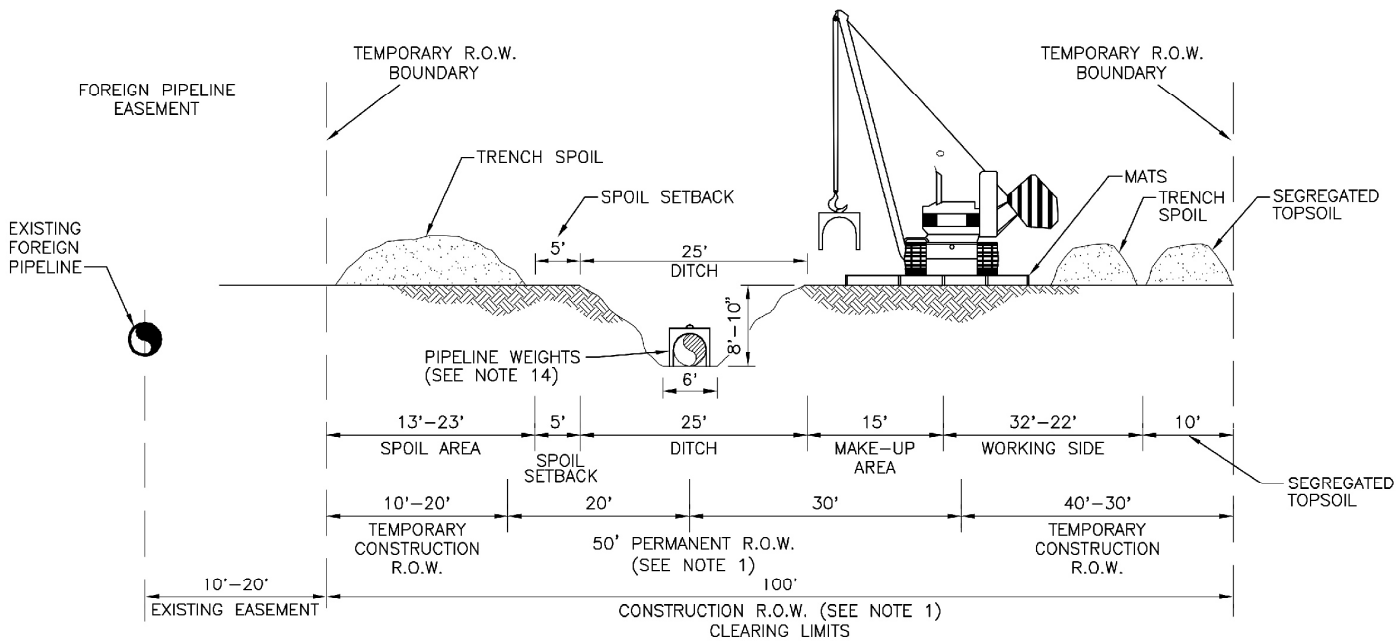

PROFILE
1"=20' HOR.
1"=20' VERT.

* DIMENSIONS ARE TYPICAL, SEE ALIGNMENT SHEETS FOR ACTUAL RIGHT-OF-WAY CONFIGURATIONS AND CLEARING LIMITS.

NOTES:

1. CONSTRUCTION RIGHT-OF-WAY WILL BE 100 FEET IN WETLANDS CONSISTING OF 50 FEET OF PERMANENT EASEMENT AND 50 FEET OF TEMPORARY WORKSPACE. ADDITIONAL TEMPORARY WORKSPACE WILL BE NECESSARY AT ROAD, RAIL AND RIVER CROSSINGS AND OTHER SPECIAL CIRCUMSTANCES, AS REQUIRED. CERTAIN SITUATIONS MAY REQUIRE A NARROWER WIDTH.
2. EQUIPMENT MATS OR LOW GROUND WEIGHT EQUIPMENT SHALL BE USED IN SATURATED CONDITIONS.
3. UTILIZE THE "TRENCH ONLY" TOPSOIL SALVAGE METHOD.
4. DEPTH OF TOPSOIL TRENCHING NOT TO EXCEED 12 INCHES EXCEPT WHERE DEEPER STRIPPING IS STIPULATED BY THE CONSTRUCTION LINE LIST OR CONSTRUCTION ALIGNMENT SHEETS.
5. INSTALL SILT FENCE ALONG DOWNSTREAM SIDE OF THE CONSTRUCTION R.O.W.
6. LEAVE GAPS IN SPOIL PILES AT OBVIOUS DRAINAGE LOCATIONS. DO NOT PUSH UPLAND SOILS INTO CANALS OR WETLANDS. DO NOT USE TOPSOIL FOR PADDING.
7. AVOID SCALPING VEGETATED GROUND SURFACE WHEN BACKFILLING SPOIL AND TOPSOIL PILES.
8. TOPSOIL AND TRENCH SPOIL RELATIVE POSITIONS CAN, AS APPROVED BY THE ENVIRONMENTAL INSPECTOR, BE REVERSED. KEEP TOPSOIL CLEAN OF ALL CONSTRUCTION DEBRIS.
9. CUT VEGETATION AND TREES OFF AT GROUND LEVEL, LEAVING EXISTING ROOT SYSTEMS IN PLACE AND REMOVE CUTTINGS FROM THE WETLAND FOR DISPOSAL.
10. LIMIT THE PULLING OF STUMPS AND GRADING TO THE TRENCH AREA. DO NOT GRADE OR REMOVE STUMPS OR ROOT SYSTEMS FROM THE REST OF THE RIGHT-OF-WAY UNLESS REQUIRED BY SAFETY-RELATED CONSTRUCTION CONSTRAINT. TRAVEL THROUGH WETLAND WILL BE LIMITED TO ONE PASS TO CONSTRUCT THE WETLAND TRAVEL LANE.
11. FOLLOWING BACKFILLING OF THE PIPELINE DITCH AND PRIOR TO THE FINAL PIPELINE RIGHT-OF-WAY RESTORATION, A CROWN OF NO GREATER THAN 6 INCHES WILL BE INSTALLED ACROSS THE PIPELINE DITCH IN SATURATED WETLAND SOIL CONDITIONS OR RESTORED PRE-CONSTRUCTION GRADE.
12. IN UNSATURATED CONDITIONS, SPOIL FROM THE WETLAND TRENCH MAY BE USED TO STABILIZE THE WORKING SIDE.
13. REMOVE TIMBER RIPRAP OR EQUIPMENT MATS FROM THE WETLANDS UPON COMPLETION OF CONSTRUCTION.
14. PIPELINE WEIGHTS OF AN APPROPRIATE TYPE, WEIGHT AND SPACING WILL BE USED AS NEEDED.

Appendix D, Figure D - 14

Rover Pipeline Project - Typical Right-of-Way Configurations

Rover Pipeline Typical Wetland Crossing (Non-Forested Only)
No Overlap Construction Area

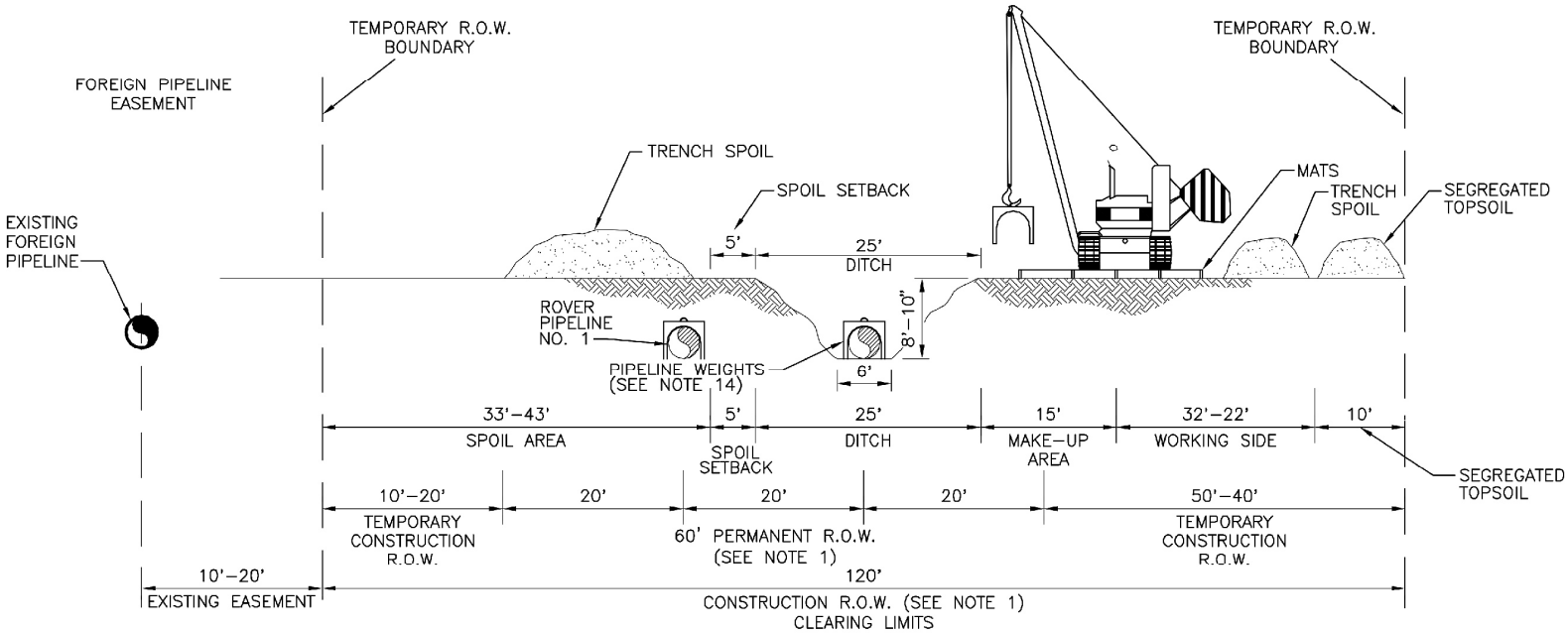

PROFILE
1"=20' HOR.
1"=20' VERT.

* DIMENSIONS ARE TYPICAL, SEE ALIGNMENT SHEETS FOR ACTUAL RIGHT-OF-WAY CONFIGURATIONS AND CLEARING LIMITS.

NOTES:

1. CONSTRUCTION RIGHT-OF-WAY WILL BE 120 FEET IN WETLANDS CONSISTING OF 60 FEET OF PERMANENT EASEMENT AND 60 FEET OF TEMPORARY WORKSPACE. ADDITIONAL TEMPORARY WORKSPACE WILL BE NECESSARY AT ROAD, RAIL AND RIVER CROSSINGS AND OTHER SPECIAL CIRCUMSTANCES, AS REQUIRED. CERTAIN SITUATIONS MAY REQUIRE A NARROWER WIDTH.
2. EQUIPMENT MATS OR LOW GROUND WEIGHT EQUIPMENT SHALL BE USED IN SATURATED CONDITIONS.
3. UTILIZE THE "TRENCH ONLY" TOPSOIL SALVAGE METHOD.
4. DEPTH OF TOPSOIL TRENCHING NOT TO EXCEED 12 INCHES EXCEPT WHERE DEEPER STRIPPING IS STIPULATED BY THE CONSTRUCTION LINE LIST OR CONSTRUCTION ALIGNMENT SHEETS.
5. INSTALL SILT FENCE ALONG DOWNSTREAM SIDE OF THE CONSTRUCTION R.O.W.
6. LEAVE GAPS IN SPOIL PILES AT OBVIOUS DRAINAGE LOCATIONS. DO NOT PUSH UPLAND SOILS INTO CANALS OR WETLANDS. DO NOT USE TOPSOIL FOR PADDING.
7. AVOID SCALPING VEGETATED GROUND SURFACE WHEN BACKFILLING SPOIL AND TOPSOIL PILES.
8. TOPSOIL AND TRENCH SPOIL RELATIVE POSITIONS CAN, AS APPROVED BY THE ENVIRONMENTAL INSPECTOR, BE REVERSED. KEEP TOPSOIL CLEAN OF ALL CONSTRUCTION DEBRIS.
9. CUT VEGETATION AND TREES OFF AT GROUND LEVEL, LEAVING EXISTING ROOT SYSTEMS IN PLACE AND REMOVE CUTTINGS FROM THE WETLAND FOR DISPOSAL.
10. LIMIT THE PULLING OF STUMPS AND GRADING TO THE TRENCH AREA. DO NOT GRADE OR REMOVE STUMPS OR ROOT SYSTEMS FROM THE REST OF THE RIGHT-OF-WAY UNLESS REQUIRED BY SAFETY-RELATED CONSTRUCTION CONSTRAINT. TRAVEL THROUGH WETLAND WILL BE LIMITED TO ONE PASS TO CONSTRUCT THE WETLAND TRAVEL LANE.
11. FOLLOWING BACKFILLING OF THE PIPELINE DITCH AND PRIOR TO THE FINAL PIPELINE RIGHT-OF-WAY RESTORATION, A CROWN OF NO GREATER THAN 6 INCHES WILL BE INSTALLED ACROSS THE PIPELINE DITCH IN SATURATED WETLAND SOIL CONDITIONS OR RESTORED PRE-CONSTRUCTION GRADE.
12. IN UNSATURATED CONDITIONS, SPOIL FROM THE WETLAND TRENCH MAY BE USED TO STABILIZE THE WORKING SIDE.
13. REMOVE TIMBER RIPRAP OR EQUIPMENT MATS FROM THE WETLANDS UPON COMPLETION OF CONSTRUCTION.
14. PIPELINE WEIGHTS OF AN APPROPRIATE TYPE, WEIGHT AND SPACING WILL BE USED AS NEEDED.

Appendix D, Figure D - 15

Rover Pipeline Project - Typical Right-of-Way Configurations

Dual Rover Pipelines Typical Wetland Crossing (Non-Forested Only) No Overlap Construction Area

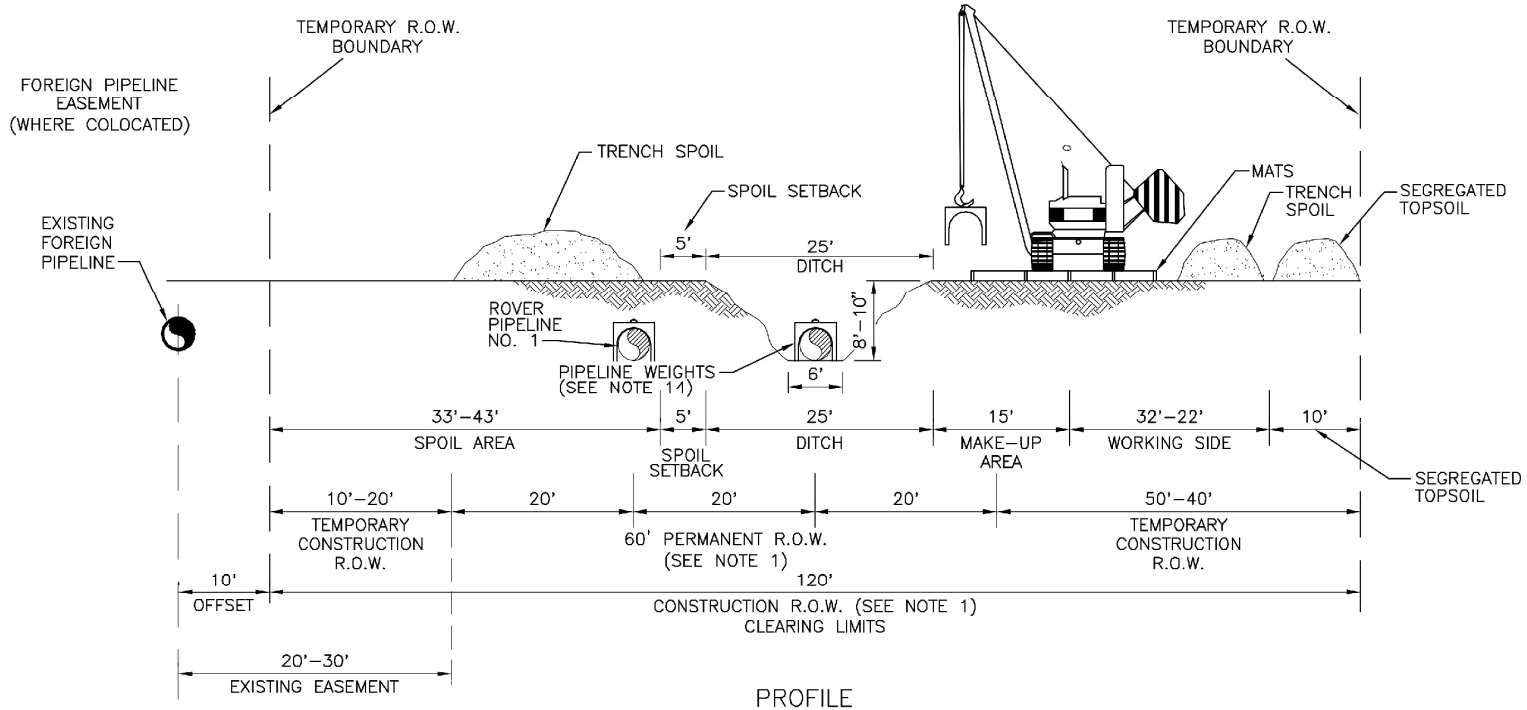

PROFILE
1"=20' HOR.
1"=20' VERT.

* DIMENSIONS ARE TYPICAL, SEE ALIGNMENT SHEETS FOR ACTUAL RIGHT-OF-WAY CONFIGURATIONS AND CLEARING LIMITS.

NOTES:

1. CONSTRUCTION RIGHT-OF-WAY WILL BE 120 FEET IN WETLANDS CONSISTING OF 60 FEET OF PERMANENT EASEMENT AND 60 FEET OF TEMPORARY WORKSPACE. ADDITIONAL TEMPORARY WORKSPACE WILL BE NECESSARY AT ROAD, RAIL AND RIVER CROSSINGS AND OTHER SPECIAL CIRCUMSTANCES, AS REQUIRED. CERTAIN SITUATIONS MAY REQUIRE A NARROWER WIDTH.
2. EQUIPMENT MATS OR LOW GROUND WEIGHT EQUIPMENT SHALL BE USED IN SATURATED CONDITIONS.
3. UTILIZE THE "TRENCH ONLY" TOPSOIL SALVAGE METHOD.
4. DEPTH OF TOPSOIL TRENCHING NOT TO EXCEED 12 INCHES EXCEPT WHERE DEEPER STRIPPING IS STIPULATED BY THE CONSTRUCTION LINE LIST OR CONSTRUCTION ALIGNMENT SHEETS.
5. INSTALL SILT FENCE ALONG DOWNSTREAM SIDE OF THE CONSTRUCTION R.O.W.
6. LEAVE GAPS IN SPOIL PILES AT OBVIOUS DRAINAGE LOCATIONS. DO NOT PUSH UPLAND SOILS INTO CANALS OR WETLANDS. DO NOT USE TOPSOIL FOR PADDING.
7. AVOID SCALPING VEGETATED GROUND SURFACE WHEN BACKFILLING SPOIL AND TOPSOIL PILES.
8. TOPSOIL AND TRENCH SPOIL RELATIVE POSITIONS CAN, AS APPROVED BY THE ENVIRONMENTAL INSPECTOR, BE REVERSED. KEEP TOPSOIL CLEAN OF ALL CONSTRUCTION DEBRIS.
9. CUT VEGETATION AND TREES OFF AT GROUND LEVEL, LEAVING EXISTING ROOT SYSTEMS IN PLACE AND REMOVE CUTTINGS FROM THE WETLAND FOR DISPOSAL.
10. LIMIT THE PULLING OF STUMPS AND GRADING TO THE TRENCH AREA. DO NOT GRADE OR REMOVE STUMPS OR ROOT SYSTEMS FROM THE REST OF THE RIGHT-OF-WAY UNLESS REQUIRED BY SAFETY-RELATED CONSTRUCTION CONSTRAINT. TRAVEL THROUGH WETLAND WILL BE LIMITED TO ONE PASS TO CONSTRUCT THE WETLAND TRAVEL LANE.
11. FOLLOWING BACKFILLING OF THE PIPELINE DITCH AND PRIOR TO THE FINAL PIPELINE RIGHT-OF-WAY RESTORATION, A CROWN OF NO GREATER THAN 6 INCHES WILL BE INSTALLED ACROSS THE PIPELINE DITCH IN SATURATED WETLAND SOIL CONDITIONS OR RESTORED PRE-CONSTRUCTION GRADE.
12. IN UNSATURATED CONDITIONS, SPOIL FROM THE WETLAND TRENCH MAY BE USED TO STABILIZE THE WORKING SIDE.
13. REMOVE TIMBER RIPRAP OR EQUIPMENT MATS FROM THE WETLANDS UPON COMPLETION OF CONSTRUCTION.
14. PIPELINE WEIGHTS OF AN APPROPRIATE TYPE, WEIGHT AND SPACING WILL BE USED AS NEEDED.

Appendix D, Figure D - 16

Rover Pipeline Project - Typical Right-of-Way Configurations

Dual Rover Pipelines Typical Wetland Crossing (Non-Forested Only) 10'-20' Overlap Construction Area

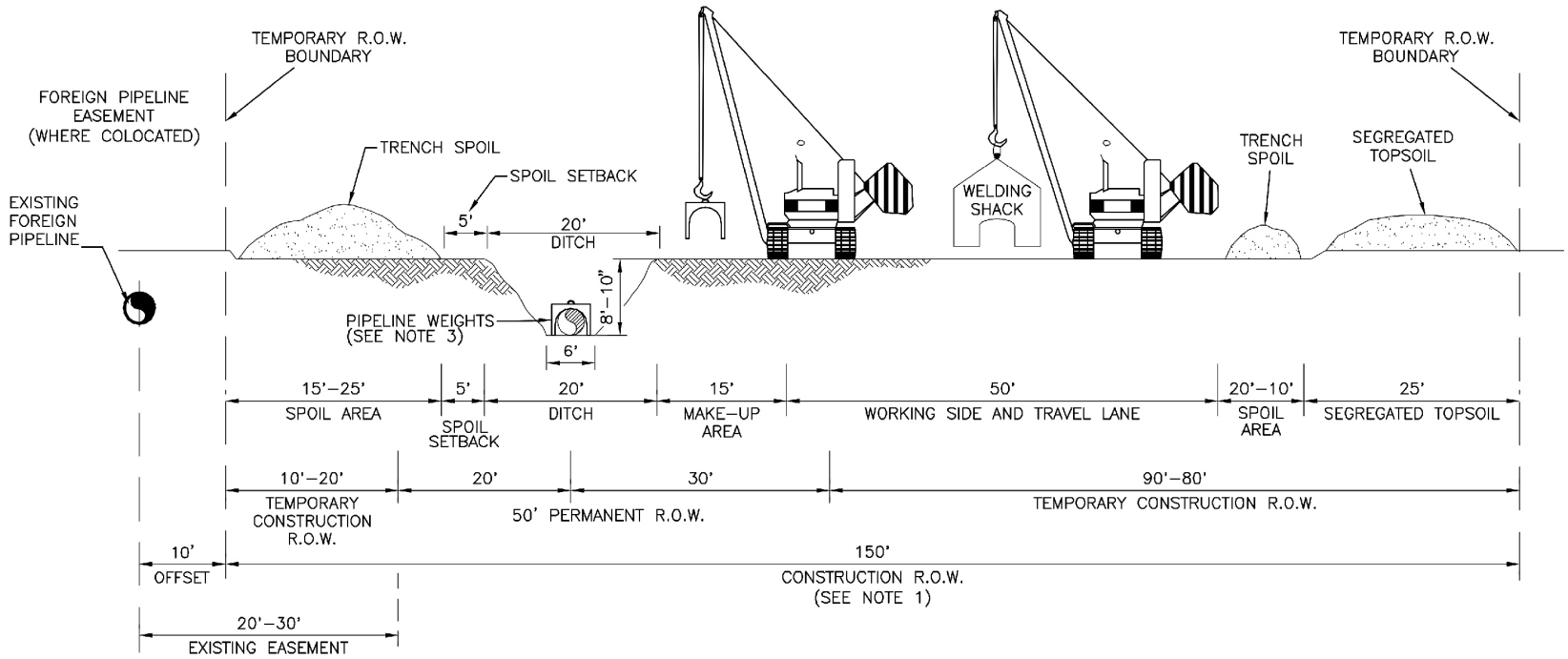

PROFILE
1"=20' HOR.
1"=20' VERT.

* DIMENSIONS ARE TYPICAL, SEE ALIGNMENT SHEETS FOR ACTUAL RIGHT-OF-WAY CONFIGURATIONS AND CLEARING LIMITS.

NOTES:

1. AGRICULTURAL CONSTRUCTION RIGHT-OF-WAY WILL BE 150 FEET WIDE CONSISTING OF 50 FEET OF PERMANENT EASEMENT, 100 FEET OF TEMPORARY WORKSPACE, FURTHER ADDITIONAL TEMPORARY WORKSPACE WILL BE NECESSARY AT ROAD, RAIL AND RIVER CROSSINGS AND OTHER SPECIAL CIRCUMSTANCES, AS REQUIRED. CERTAIN SITUATIONS MAY REQUIRE A NARROWER WIDTH.
2. LEAVE GAPS IN SPOIL PILES AT OBVIOUS DRAINAGE LOCATIONS. DO NOT PUSH UPLAND SOILS INTO CANALS OR WETLANDS.
3. PIPELINE WEIGHTS OF AN APPROPRIATE TYPE, WEIGHT AND SPACING WILL BE USED AS NEEDED.

Appendix D, Figure D - 17

Rover Pipeline Project - Typical Right-of-Way Configurations

Rover Pipeline Typical Agricultural Construction Area 10' to 20' Overlap (Full ROW Topsoil Segregation)

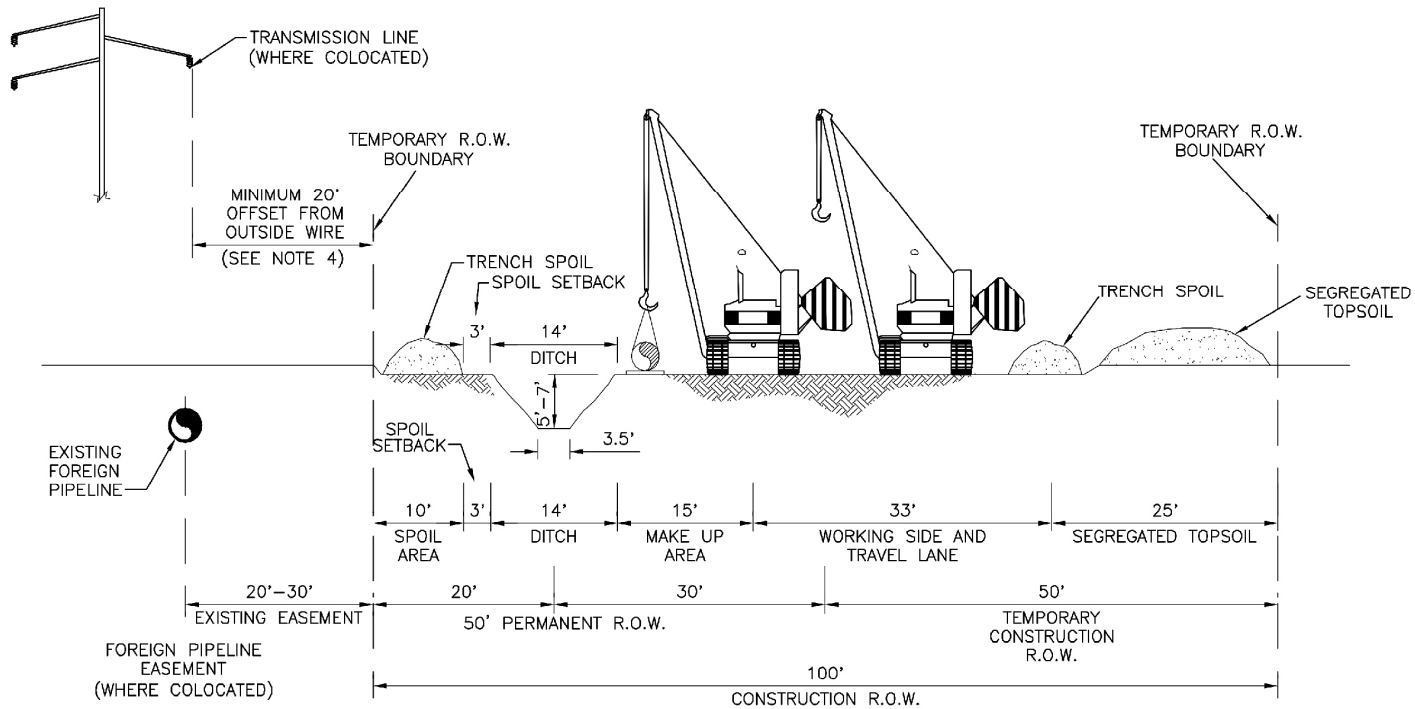

PROFILE
1"=20' HOR.
1"=20' VERT.

* DIMENSIONS ARE TYPICAL, SEE ALIGNMENT SHEETS FOR ACTUAL RIGHT-OF-WAY CONFIGURATIONS AND CLEARING LIMITS.

NOTES:

1. AGRICULTURAL CONSTRUCTION RIGHT-OF-WAY WILL BE 100 FEET WIDE CONSISTING OF 50 FEET OF PERMANENT EASEMENT, 50 FEET OF TEMPORARY WORKSPACE, FURTHER ADDITIONAL TEMPORARY WORKSPACE WILL BE NECESSARY AT ROAD, RAIL AND RIVER CROSSINGS AND OTHER SPECIAL CIRCUMSTANCES, AS REQUIRED. CERTAIN SITUATIONS MAY REQUIRE A NARROWER WIDTH.
2. LEAVE GAPS IN SPOIL PILES AT OBVIOUS DRAINAGE LOCATIONS. DO NOT PUSH UPLAND SOILS INTO CANALS OR WETLANDS.
3. PIPELINE WEIGHTS OF AN APPROPRIATE TYPE, WEIGHT AND SPACING WILL BE USED AS NEEDED.
4. FOR POWER LINES RATED 50 KV OR BELOW THE MINIMUM CLEARANCE BETWEEN THE LINES OF ANY PART OF ANY EQUIPMENT OR LOAD SHALL BE 10 FT. FOR LINES RATED OVER 50KV, THE MINIMUM CLEARANCE SHALL BE 10 FT PLUS 0.4 INCHES FOR EACH 1 KV OVER 50 KV, OR TWICE THE LINE INSULATOR. FOR LINES RATED FOR 750 KV TO 1000 KV THE MINIMUM CLEARANCE SHALL BE 20 FT. THESE PROVISIONS ARE FOR IDEAL WEATHER CONDITIONS, AND THE CLEARANCES SHALL BE GREATER UNDER MORE ADVERSE WEATHER CONDITIONS.

Appendix D, Figure D - 18

Rover Pipeline Project - Typical Right-of-Way Configurations

Rover Pipeline 24" CGT, Berne & Majorsville Laterals Typical Agricultural Construction Area w & w/o Parallel Foreign P/L or Transmission Line No Overlap (Full ROW Topsoil Segregation)

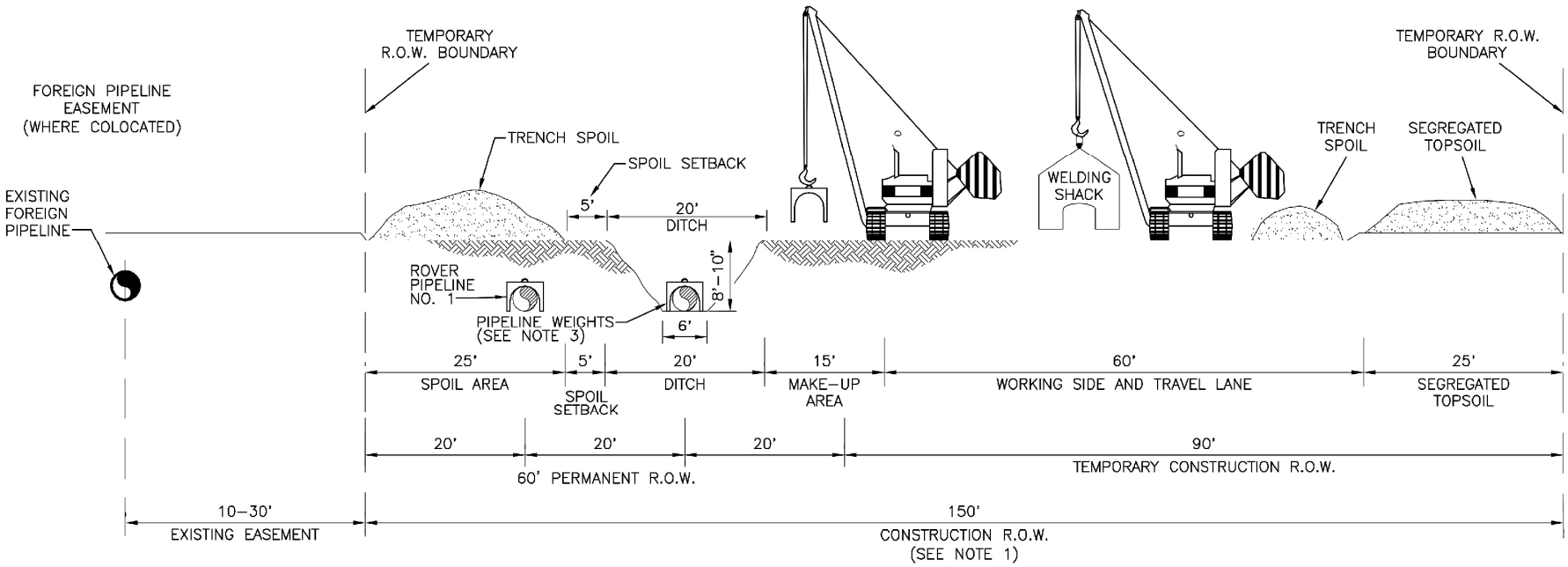

PROFILE
1"=20' HOR.
1"=20' VERT.

* DIMENSIONS ARE TYPICAL, SEE ALIGNMENT SHEETS FOR ACTUAL RIGHT-OF-WAY CONFIGURATIONS AND CLEARING LIMITS.

NOTES:

1. AGRICULTURAL CONSTRUCTION RIGHT-OF-WAY WILL BE 150 FEET WIDE CONSISTING OF 60 FEET OF PERMANENT EASEMENT, 90 FEET OF TEMPORARY WORKSPACE, FURTHER ADDITIONAL TEMPORARY WORKSPACE WILL BE NECESSARY AT ROAD, RAIL AND RIVER CROSSINGS AND OTHER SPECIAL CIRCUMSTANCES, AS REQUIRED. CERTAIN SITUATIONS MAY REQUIRE A NARROWER WIDTH.
2. LEAVE GAPS IN SPOIL PILES AT OBVIOUS DRAINAGE LOCATIONS. DO NOT PUSH UPLAND SOILS INTO CANALS OR WETLANDS.
3. PIPELINE WEIGHTS OF AN APPROPRIATE TYPE, WEIGHT AND SPACING WILL BE USED AS NEEDED.

Appendix D, Figure D - 19

Rover Pipeline Project - Typical Right-of-Way Configurations

Dual Rover Pipelines Typical Agricultural Construction Area No Overlap (Full ROW Topsoil Segregation)

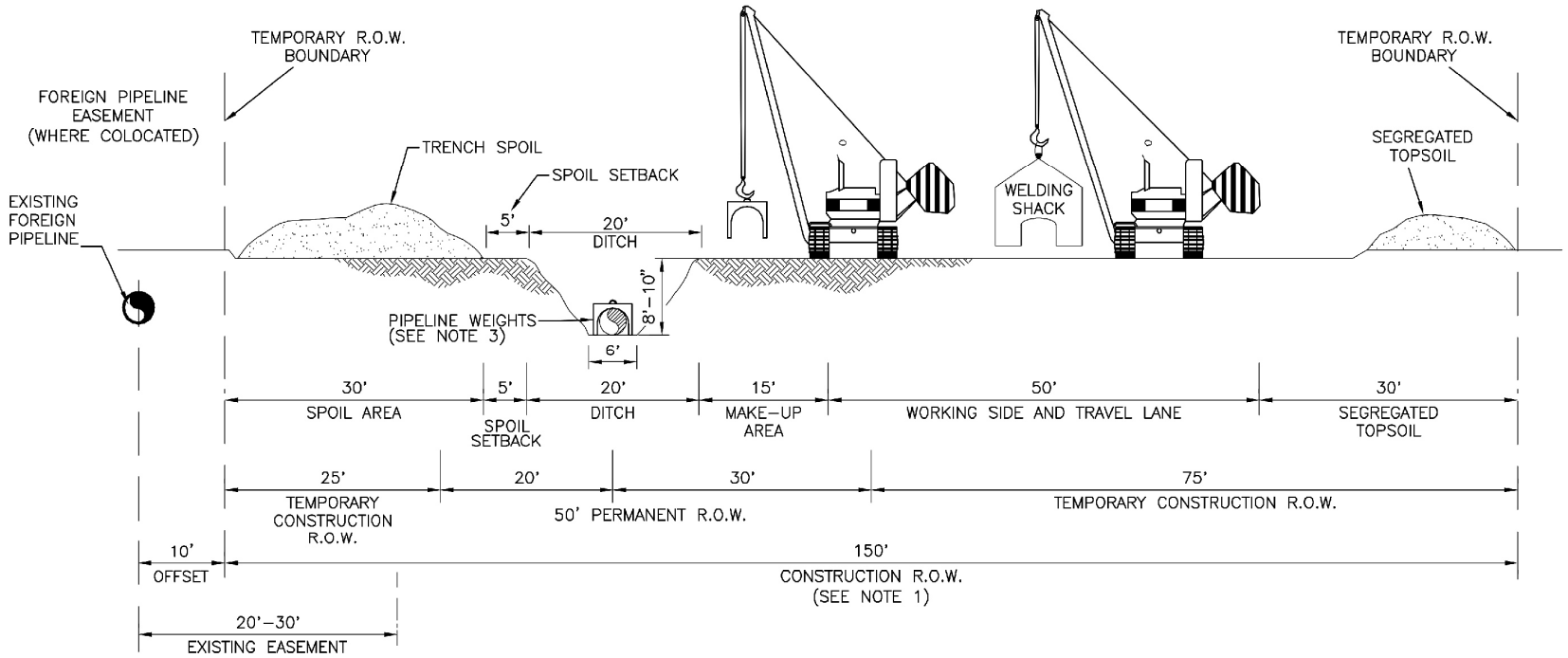

PROFILE
1"=20' HOR.
1"=20' VERT.

* DIMENSIONS ARE TYPICAL, SEE ALIGNMENT SHEETS FOR ACTUAL RIGHT-OF-WAY CONFIGURATIONS AND CLEARING LIMITS.

NOTES:

1. AGRICULTURAL CONSTRUCTION RIGHT-OF-WAY WILL BE 150 FEET WIDE CONSISTING OF 50 FEET OF PERMANENT EASEMENT, 100 FEET OF TEMPORARY WORKSPACE, FURTHER ADDITIONAL TEMPORARY WORKSPACE WILL BE NECESSARY AT ROAD, RAIL AND RIVER CROSSINGS AND OTHER SPECIAL CIRCUMSTANCES, AS REQUIRED. CERTAIN SITUATIONS MAY REQUIRE A NARROWER WIDTH.
2. LEAVE GAPS IN SPOIL PILES AT OBVIOUS DRAINAGE LOCATIONS. DO NOT PUSH UPLAND SOILS INTO CANALS OR WETLANDS.
3. PIPELINE WEIGHTS OF AN APPROPRIATE TYPE, WEIGHT AND SPACING WILL BE USED AS NEEDED.

Appendix D, Figure D - 20

Rover Pipeline Project - Typical Right-of-Way Configurations

Rover Pipeline Typical Agricultural Construction Area 25' Overlap (Full ROW Topsoil Segregation)

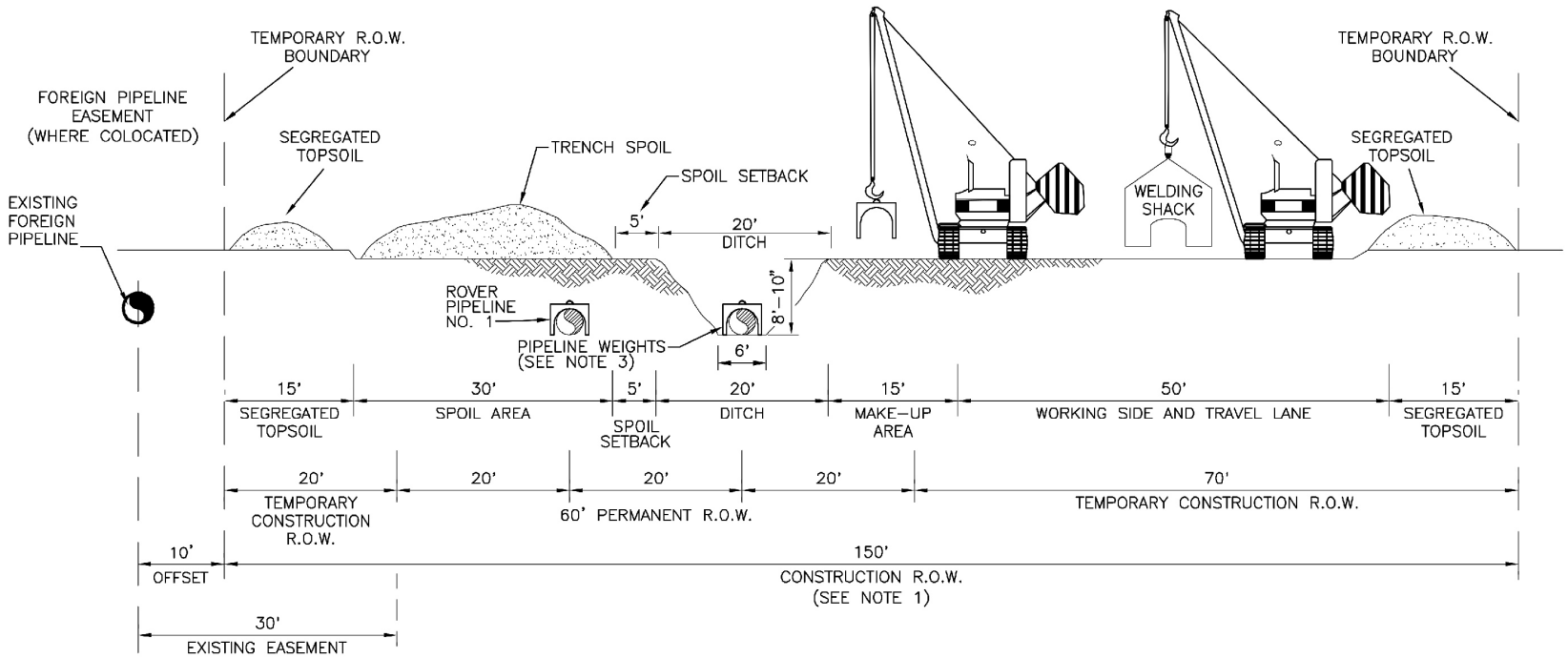

PROFILE
1"=20' HOR.
1"=20' VERT.

* DIMENSIONS ARE TYPICAL, SEE ALIGNMENT SHEETS FOR ACTUAL RIGHT-OF-WAY CONFIGURATIONS AND CLEARING LIMITS.

NOTES:

1. AGRICULTURAL CONSTRUCTION RIGHT-OF-WAY WILL BE 150 FEET WIDE CONSISTING OF 50 FEET OF PERMANENT EASEMENT, 100 FEET OF TEMPORARY WORKSPACE, FURTHER ADDITIONAL TEMPORARY WORKSPACE WILL BE NECESSARY AT ROAD, RAIL AND RIVER CROSSINGS AND OTHER SPECIAL CIRCUMSTANCES, AS REQUIRED. CERTAIN SITUATIONS MAY REQUIRE A NARROWER WIDTH.
2. LEAVE GAPS IN SPOIL PILES AT OBVIOUS DRAINAGE LOCATIONS. DO NOT PUSH UPLAND SOILS INTO CANALS OR WETLANDS.
3. PIPELINE WEIGHTS OF AN APPROPRIATE TYPE, WEIGHT AND SPACING WILL BE USED AS NEEDED.

Appendix D, Figure D - 21

Rover Pipeline Project - Typical Right-of-Way Configurations

Dual Rover Pipelines Typical Agricultural Construction Area 20' Overlap (Full ROW Topsoil Segregation)

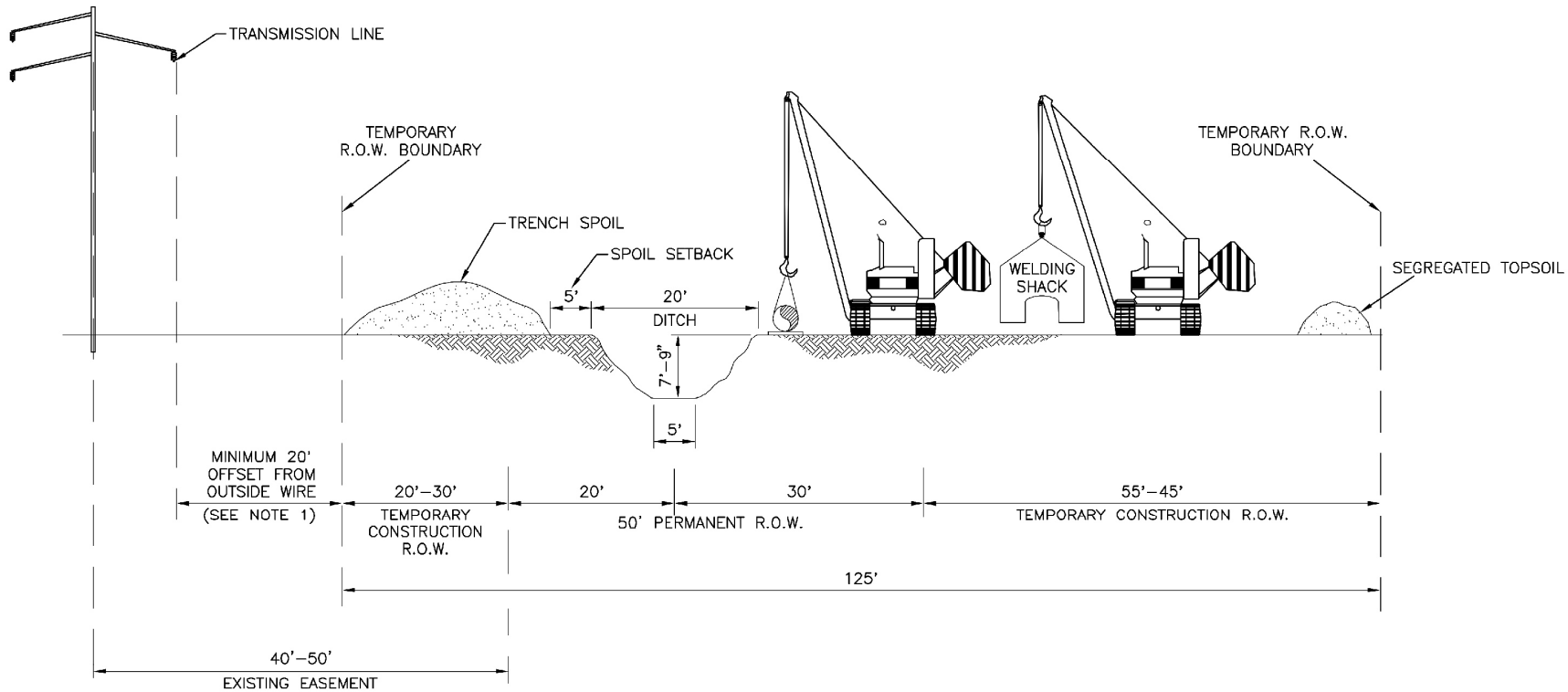

PROFILE
1"=20' HOR.
1"=20' VERT.

* DIMENSIONS ARE TYPICAL, SEE ALIGNMENT SHEETS FOR ACTUAL RIGHT-OF-WAY CONFIGURATIONS AND CLEARING LIMITS.

NOTES:

1. FOR POWER LINES RATED 50 KV OR BELOW THE MINIMUM CLEARANCE BETWEEN THE LINES OF ANY PART OF ANY EQUIPMENT OR LOAD SHALL BE 10 FT. FOR LINES RATED OVER 50KV, THE MINIMUM CLEARANCE SHALL BE 10 FT PLUS 0.4 INCHES FOR EACH 1 KV OVER 50 KV, OR TWICE THE LINE INSULATOR. FOR LINES RATED FOR 750 KV TO 1000 KV THE MINIMUM CLEARANCE SHALL BE 20 FT. THESE PROVISIONS ARE FOR IDEAL WEATHER CONDITIONS, AND THE CLEARANCES SHALL BE GREATER UNDER MORE ADVERSE WEATHER CONDITIONS.

Appendix D, Figure D - 22

Rover Pipeline Project - Typical Right-of-Way Configurations

Rover Pipeline Typical Upland Workspace Construction Area
20'-30' Overlap Paralleling Transmission Line

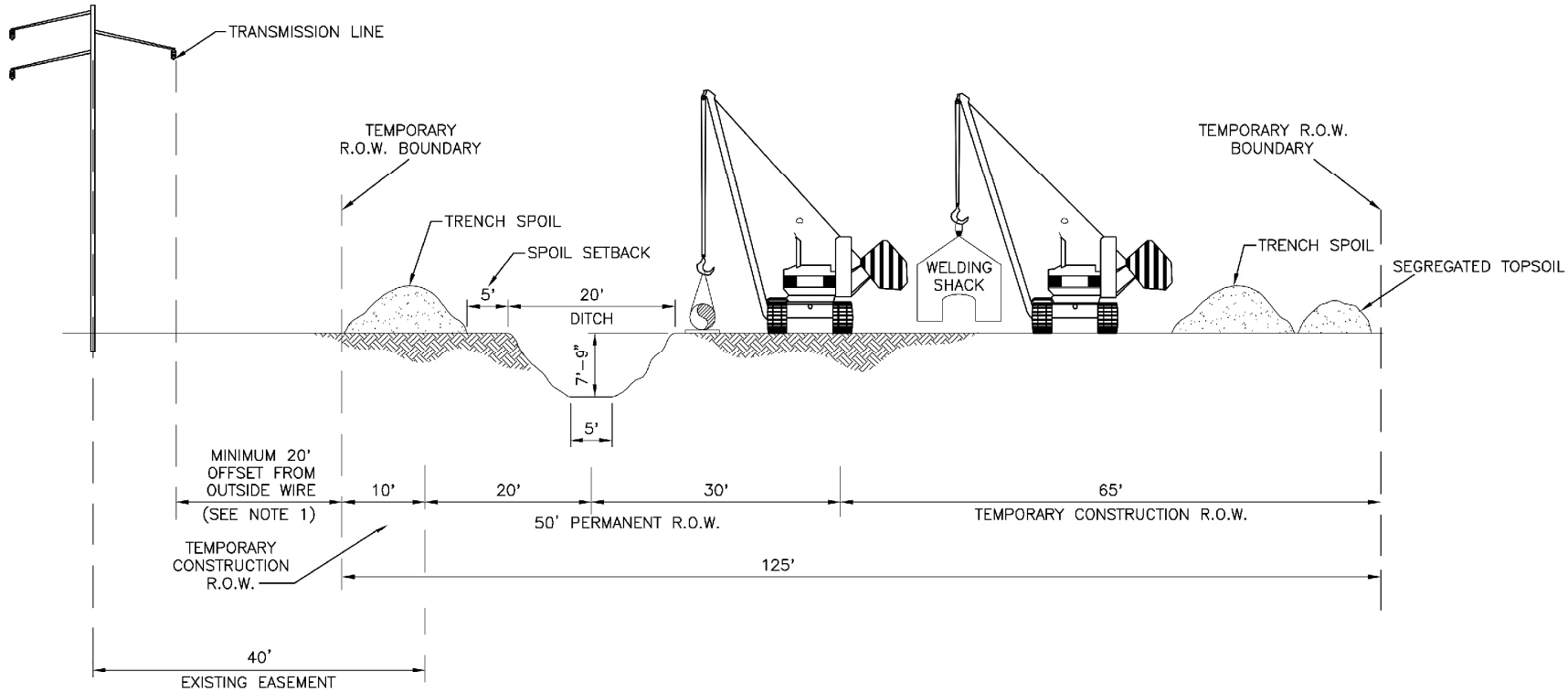

PROFILE
1"=20' HOR.
1"=20' VERT.

* DIMENSIONS ARE TYPICAL, SEE ALIGNMENT SHEETS FOR ACTUAL RIGHT-OF-WAY CONFIGURATIONS AND CLEARING LIMITS.

NOTES:

1. FOR POWER LINES RATED 50 KV OR BELOW THE MINIMUM CLEARANCE BETWEEN THE LINES OF ANY PART OF ANY EQUIPMENT OR LOAD SHALL BE 10 FT. FOR LINES RATED OVER 50KV, THE MINIMUM CLEARANCE SHALL BE 10 FT PLUS 0.4 INCHES FOR EACH 1 KV OVER 50 KV, OR TWICE THE LINE INSULATOR. FOR LINES RATED FOR 750 KV TO 1000 KV THE MINIMUM CLEARANCE SHALL BE 20 FT. THESE PROVISIONS ARE FOR IDEAL WEATHER CONDITIONS, AND THE CLEARANCES SHALL BE GREATER UNDER MORE ADVERSE WEATHER CONDITIONS.

Appendix D, Figure D - 23

Rover Pipeline Project - Typical Right-of-Way Configurations

Rover Pipeline Typical Upland Workspace Construction Area
10' Overlap Paralleling Transmission Line

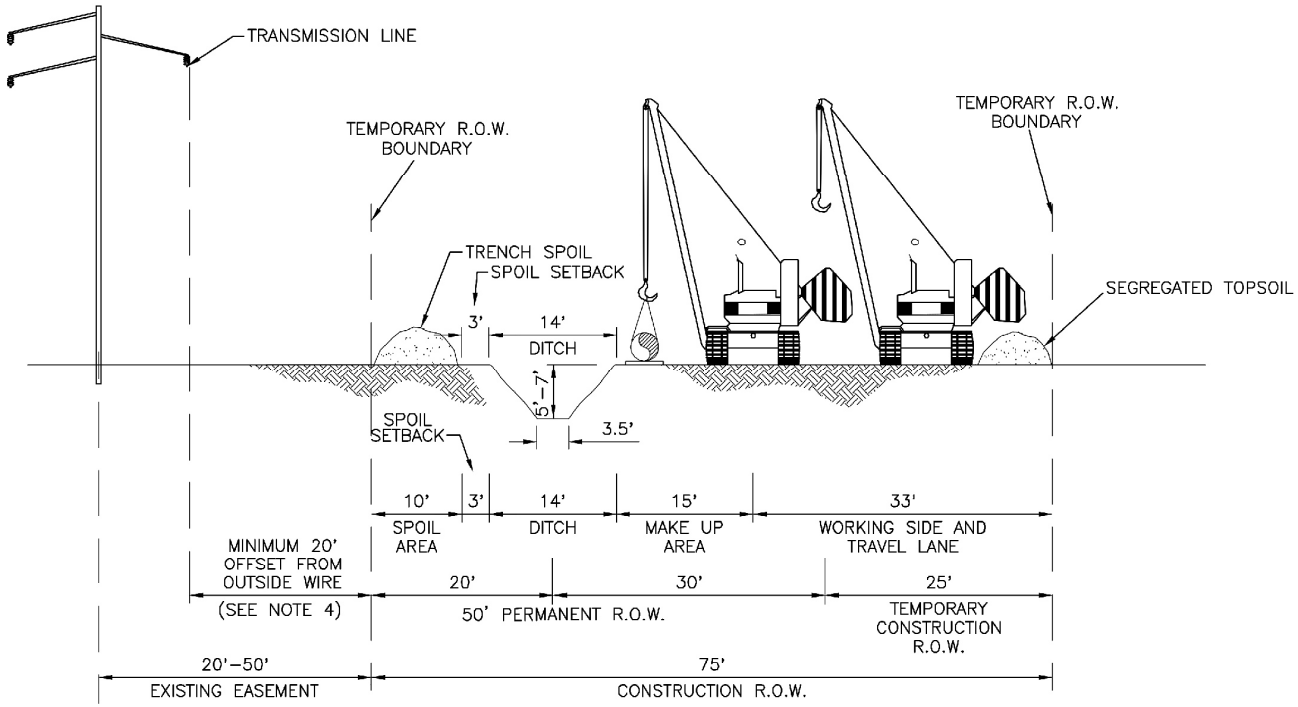

PROFILE
1"=20' HOR.
1"=20' VERT.

* DIMENSIONS ARE TYPICAL, SEE ALIGNMENT SHEETS FOR ACTUAL RIGHT-OF-WAY CONFIGURATIONS AND CLEARING LIMITS.

NOTES:

1. CONSTRUCTION RIGHT-OF-WAY WILL TYPICALLY BE 75 FEET WIDE CONSISTING OF 50 FEET OF PERMANENT EASEMENT AND 25 FEET OF TEMPORARY WORKSPACE. ADDITIONAL TEMPORARY WORKSPACE WILL BE NECESSARY AT ROAD, RAIL AND RIVER CROSSINGS AND OTHER SPECIAL CIRCUMSTANCES, AS REQUIRED. CERTAIN SITUATIONS MAY REQUIRE A NARROWER WIDTH.
2. LEAVE GAPS IN SPOIL PILES AT OBVIOUS DRAINAGE LOCATIONS. DO NOT PUSH UPLAND SOILS INTO CANALS OR WETLANDS.
3. PIPELINE WEIGHTS OF AN APPROPRIATE TYPE, WEIGHT AND SPACING WILL BE USED AS NEEDED.
4. FOR POWER LINES RATED 50 KV OR BELOW THE MINIMUM CLEARANCE BETWEEN THE LINES OF ANY PART OF ANY EQUIPMENT OR LOAD SHALL BE 10 FT. FOR LINES RATED OVER 50KV, THE MINIMUM CLEARANCE SHALL BE 10 FT PLUS 0.4 INCHES FOR EACH 1 KV OVER 50 KV, OR TWICE THE LINE INSULATOR. FOR LINES RATED FOR 750 KV TO 1000 KV THE MINIMUM CLEARANCE SHALL BE 20 FT. THESE PROVISIONS ARE FOR IDEAL WEATHER CONDITIONS, AND THE CLEARANCES SHALL BE GREATER UNDER MORE ADVERSE WEATHER CONDITIONS.

Appendix D, Figure D - 24

Rover Pipeline Project - Typical Right-of-Way Configurations

Rover Pipeline 24" CGT, Berne & Majorsville Laterals Typical Upland & Wetland Workspace Construction Area-No Overlap Paralleling Transmission Line

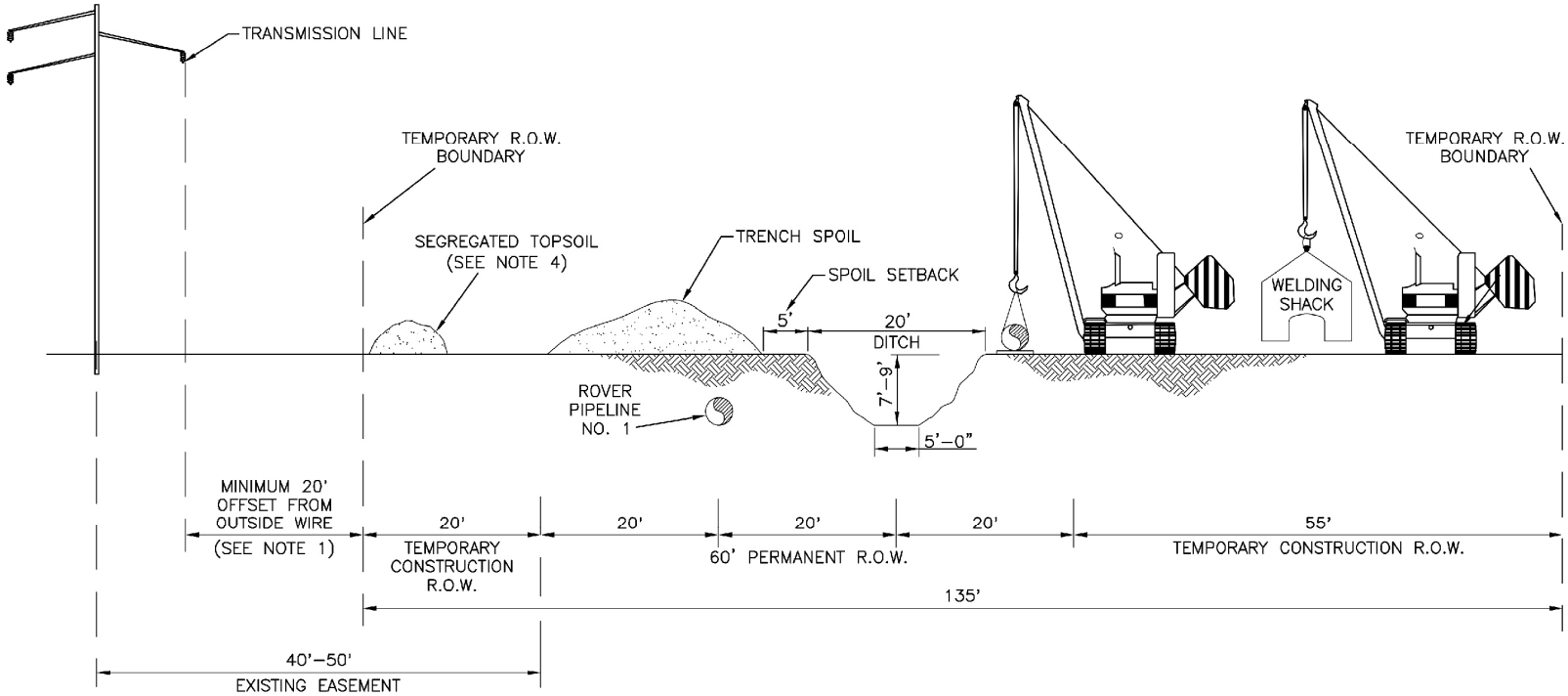

PROFILE
1"=20' HOR.
1"=20' VERT.

* DIMENSIONS ARE TYPICAL, SEE ALIGNMENT SHEETS FOR ACTUAL RIGHT-OF-WAY CONFIGURATIONS AND CLEARING LIMITS.

NOTES:

1. FOR POWER LINES RATED 50 KV OR BELOW THE MINIMUM CLEARANCE BETWEEN THE LINES OF ANY PART OF ANY EQUIPMENT OR LOAD SHALL BE 10 FT. FOR LINES RATED OVER 50KV, THE MINIMUM CLEARANCE SHALL BE 10 FT PLUS 0.4 INCHES FOR EACH 1 KV OVER 50 KV, OR TWICE THE LINE INSULATOR. FOR LINES RATED FOR 750 KV TO 1000 KV THE MINIMUM CLEARANCE SHALL BE 20 FT. THESE PROVISIONS ARE FOR IDEAL WEATHER CONDITIONS, AND THE CLEARANCES SHALL BE GREATER UNDER MORE ADVERSE WEATHER CONDITIONS.

Appendix D, Figure D - 25

Rover Pipeline Project - Typical Right-of-Way Configurations

Dual Rover Pipelines Typical Upland Workspace Construction Area 20' Overlap Paralleling Transmission Line

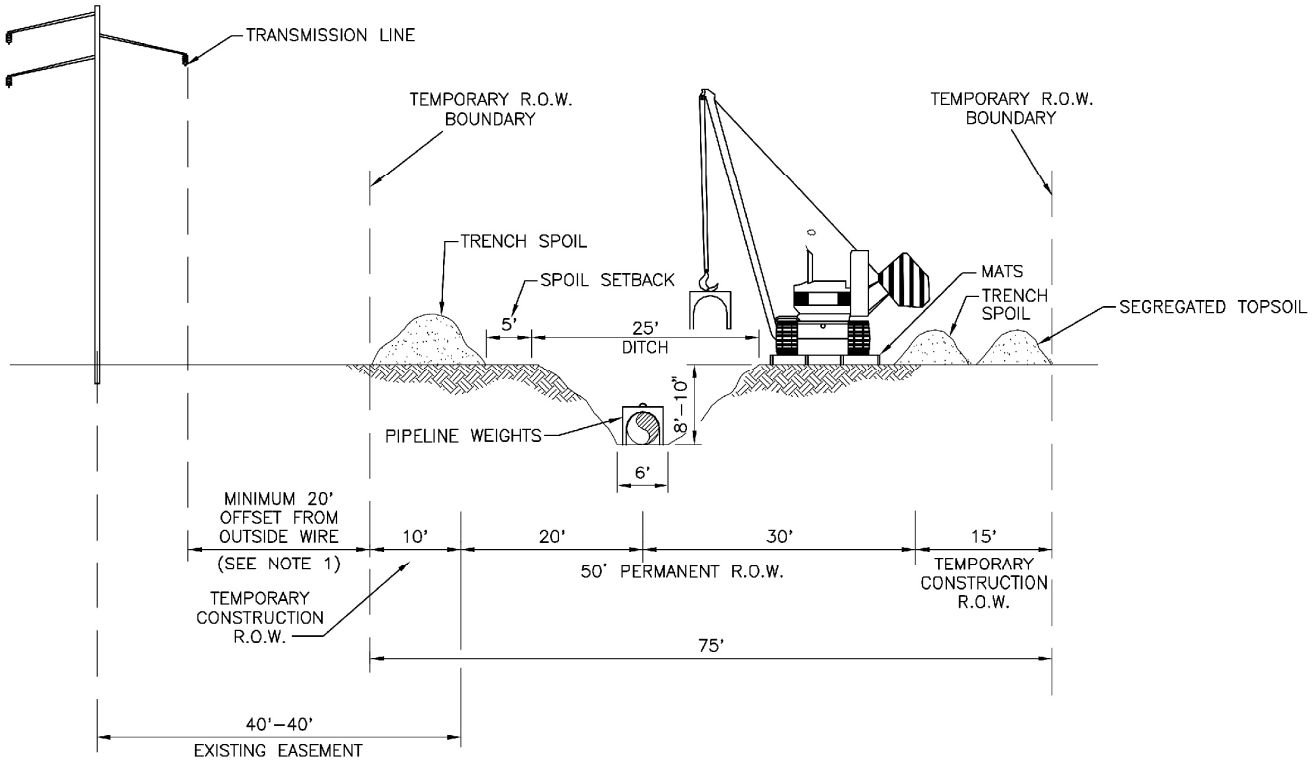

PROFILE
1"=20' HOR.
1"=20' VERT.

* DIMENSIONS ARE TYPICAL, SEE ALIGNMENT SHEETS FOR ACTUAL RIGHT-OF-WAY CONFIGURATIONS AND CLEARING LIMITS.

NOTES:

1. FOR POWER LINES RATED 50 KV OR BELOW THE MINIMUM CLEARANCE BETWEEN THE LINES OF ANY PART OF ANY EQUIPMENT OR LOAD SHALL BE 10 FT. FOR LINES RATED OVER 50KV, THE MINIMUM CLEARANCE SHALL BE 10 FT PLUS 0.4 INCHES FOR EACH 1 KV OVER 50 KV, OR TWICE THE LINE INSULATOR. FOR LINES RATED FOR 750 KV TO 1000 KV THE MINIMUM CLEARANCE SHALL BE 20 FT. THESE PROVISIONS ARE FOR IDEAL WEATHER CONDITIONS, AND THE CLEARANCES SHALL BE GREATER UNDER MORE ADVERSE WEATHER CONDITIONS.

Appendix D, Figure D - 26

Rover Pipeline Project - Typical Right-of-Way Configurations

Rover Pipeline Typical Forested Wetland Crossing
Construction Area 10' Overlap Paralleling Transmission Line

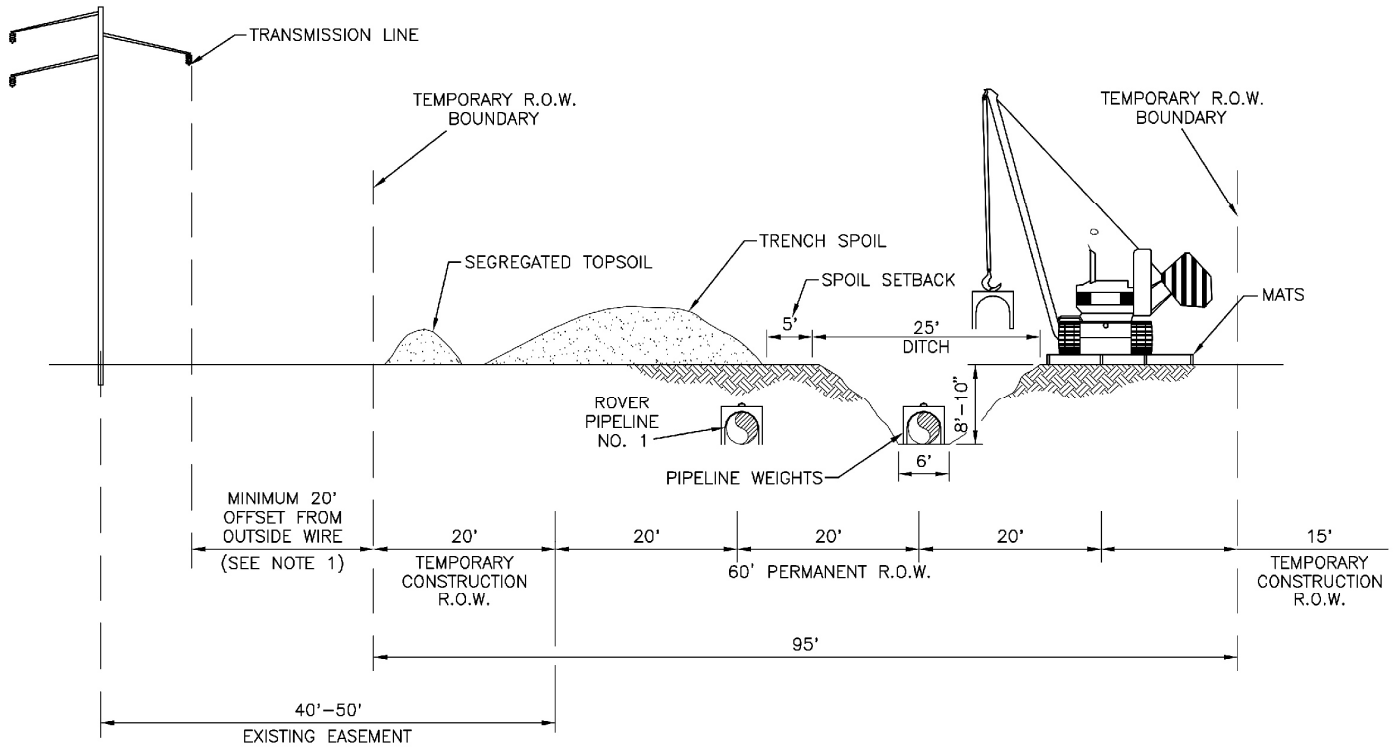

PROFILE
1"=20' HOR.
1"=20' VERT.

* DIMENSIONS ARE TYPICAL, SEE ALIGNMENT SHEETS FOR ACTUAL RIGHT-OF-WAY CONFIGURATIONS AND CLEARING LIMITS.

NOTES:

1. FOR POWER LINES RATED 50 KV OR BELOW THE MINIMUM CLEARANCE BETWEEN THE LINES OF ANY PART OF ANY EQUIPMENT OR LOAD SHALL BE 10 FT. FOR LINES RATED OVER 50KV, THE MINIMUM CLEARANCE SHALL BE 10 FT PLUS 0.4 INCHES FOR EACH 1 KV OVER 50 KV, OR TWICE THE LINE INSULATOR. FOR LINES RATED FOR 750 KV TO 1000 KV THE MINIMUM CLEARANCE SHALL BE 20 FT. THESE PROVISIONS ARE FOR IDEAL WEATHER CONDITIONS, AND THE CLEARANCES SHALL BE GREATER UNDER MORE ADVERSE WEATHER CONDITIONS.

Appendix D, Figure D - 27

Rover Pipeline Project - Typical Right-of-Way Configurations

Dual Rover Pipelines Typical Forested Wetland Crossing
Construction Area 20' Overlap Paralleling Transmission Line

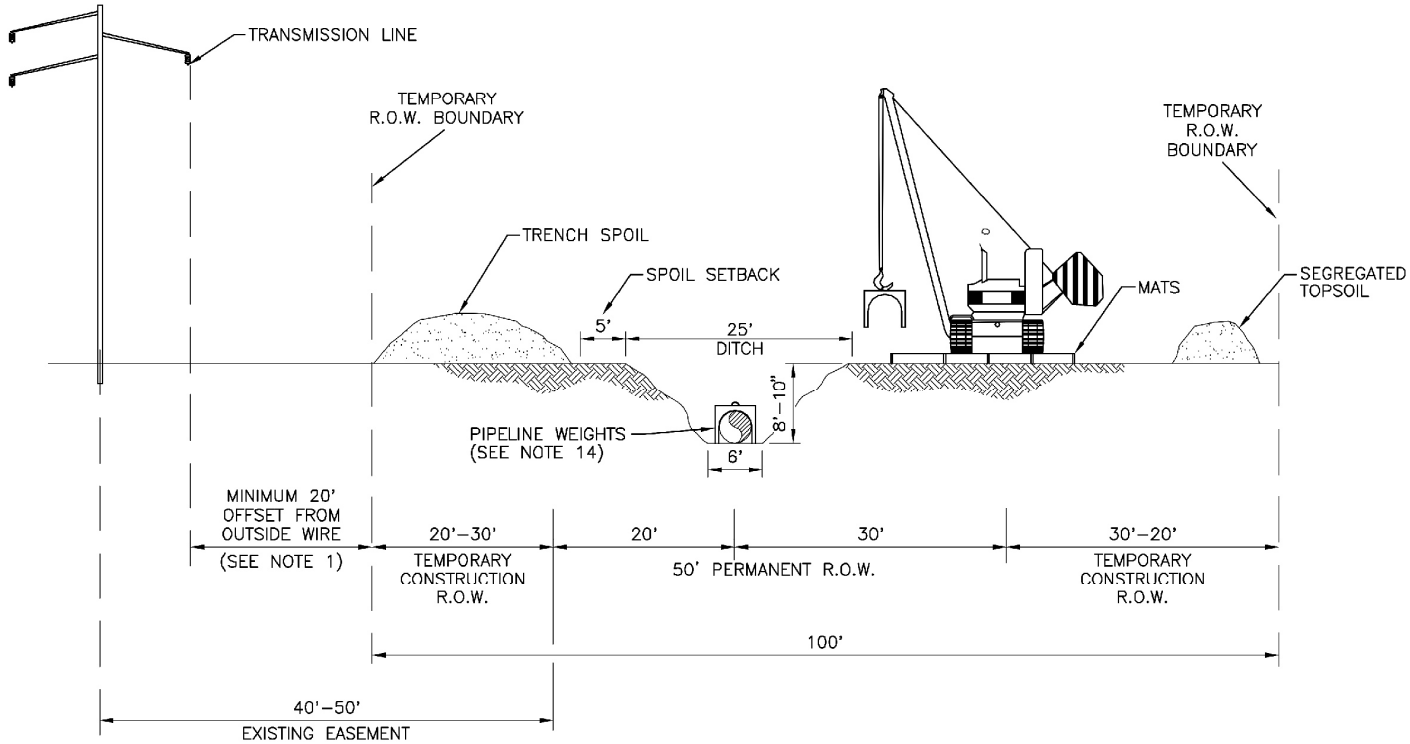

PROFILE
1"=20' HOR.
1"=20' VERT.

* DIMENSIONS ARE TYPICAL, SEE ALIGNMENT SHEETS FOR ACTUAL RIGHT-OF-WAY CONFIGURATIONS AND CLEARING LIMITS.

NOTES:

1. FOR POWER LINES RATED 50 KV OR BELOW THE MINIMUM CLEARANCE BETWEEN THE LINES OF ANY PART OF ANY EQUIPMENT OR LOAD SHALL BE 10 FT. FOR LINES RATED OVER 50KV, THE MINIMUM CLEARANCE SHALL BE 10 FT PLUS 0.4 INCHES FOR EACH 1 KV OVER 50 KV, OR TWICE THE LINE INSULATOR. FOR LINES RATED FOR 750 KV TO 1000 KV THE MINIMUM CLEARANCE SHALL BE 20 FT. THESE PROVISIONS ARE FOR IDEAL WEATHER CONDITIONS, AND THE CLEARANCES SHALL BE GREATER UNDER MORE ADVERSE WEATHER CONDITIONS.

Appendix D, Figure D - 28

Rover Pipeline Project - Typical Right-of-Way Configurations

Rover Pipeline Typical Wetland Crossing (Non-Forested Only)
20'-30' Overlap Paralleling Transmission Line

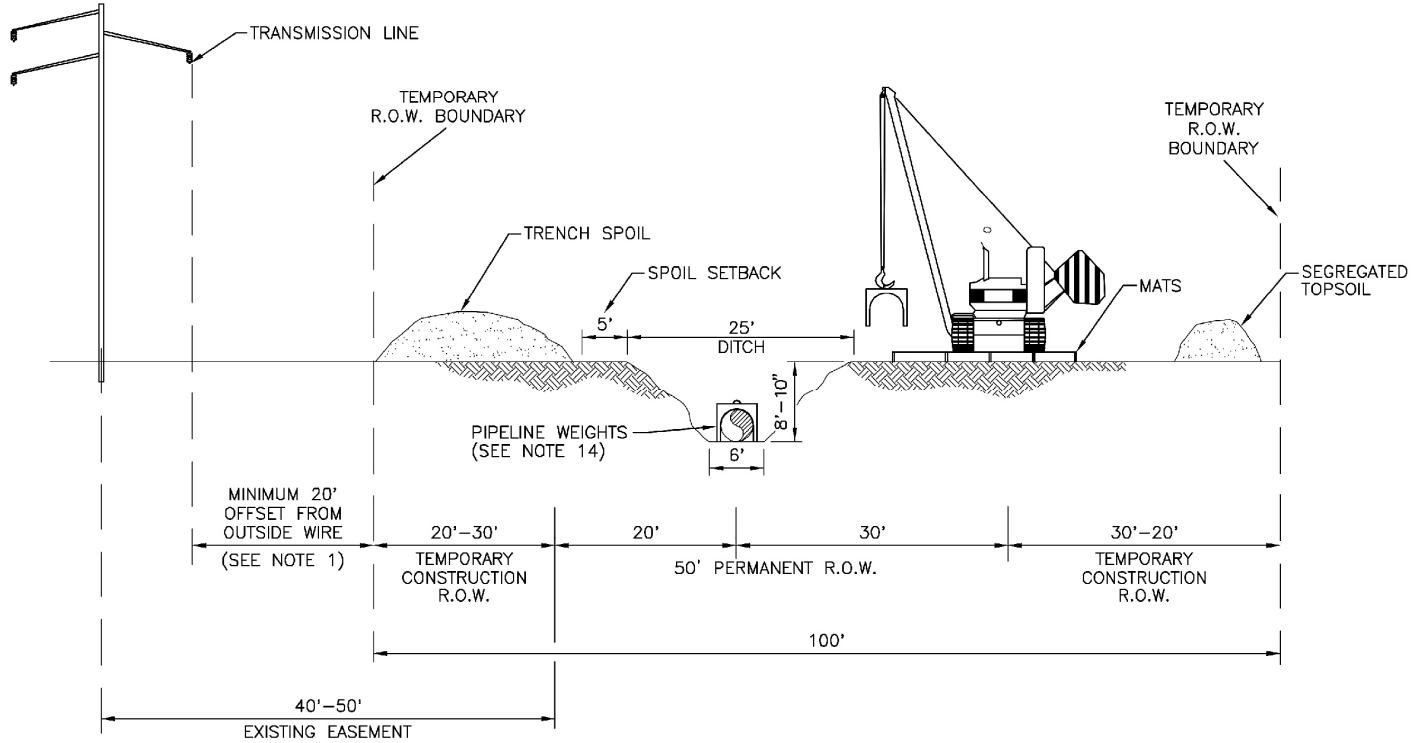

PROFILE
1"=20' HOR.
1"=20' VERT.

* DIMENSIONS ARE TYPICAL, SEE ALIGNMENT SHEETS FOR ACTUAL RIGHT-OF-WAY CONFIGURATIONS AND CLEARING LIMITS.

NOTES:

1. FOR POWER LINES RATED 50 KV OR BELOW THE MINIMUM CLEARANCE BETWEEN THE LINES OF ANY PART OF ANY EQUIPMENT OR LOAD SHALL BE 10 FT. FOR LINES RATED OVER 50KV, THE MINIMUM CLEARANCE SHALL BE 10 FT PLUS 0.4 INCHES FOR EACH 1 KV OVER 50 KV, OR TWICE THE LINE INSULATOR. FOR LINES RATED FOR 750 KV TO 1000 KV THE MINIMUM CLEARANCE SHALL BE 20 FT. THESE PROVISIONS ARE FOR IDEAL WEATHER CONDITIONS, AND THE CLEARANCES SHALL BE GREATER UNDER MORE ADVERSE WEATHER CONDITIONS.

Appendix D, Figure D - 29

Rover Pipeline Project - Typical Right-of-Way Configurations

Rover Pipeline Typical Wetland Crossing (Non-Forested Only)
10' Overlap Paralleling Transmission Line

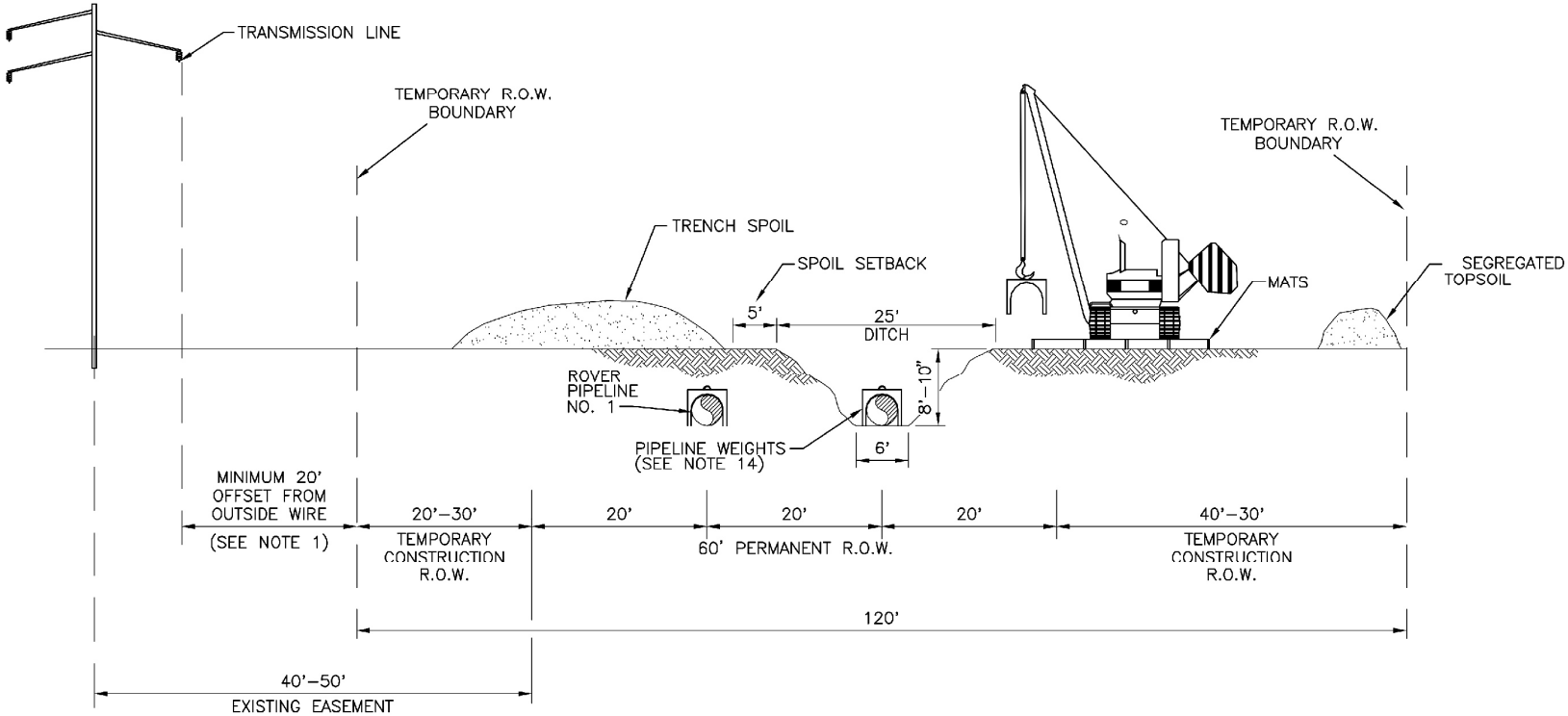

PROFILE
1"=20' HOR.
1"=20' VERT.

* DIMENSIONS ARE TYPICAL, SEE ALIGNMENT SHEETS FOR ACTUAL RIGHT-OF-WAY CONFIGURATIONS AND CLEARING LIMITS.

NOTES:

1. FOR POWER LINES RATED 50 KV OR BELOW THE MINIMUM CLEARANCE BETWEEN THE LINES OF ANY PART OF ANY EQUIPMENT OR LOAD SHALL BE 10 FT. FOR LINES RATED OVER 50KV, THE MINIMUM CLEARANCE SHALL BE 10 FT PLUS 0.4 INCHES FOR EACH 1 KV OVER 50 KV, OR TWICE THE LINE INSULATOR. FOR LINES RATED FOR 750 KV TO 1000 KV THE MINIMUM CLEARANCE SHALL BE 20 FT. THESE PROVISIONS ARE FOR IDEAL WEATHER CONDITIONS, AND THE CLEARANCES SHALL BE GREATER UNDER MORE ADVERSE WEATHER CONDITIONS.

Appendix D, Figure D - 30

Rover Pipeline Project - Typical Right-of-Way Configurations

Dual Rover Pipelines Typical Wetland Crossing (Non-Forested Only) 20'-30' Overlap Paralleling Transmission Line

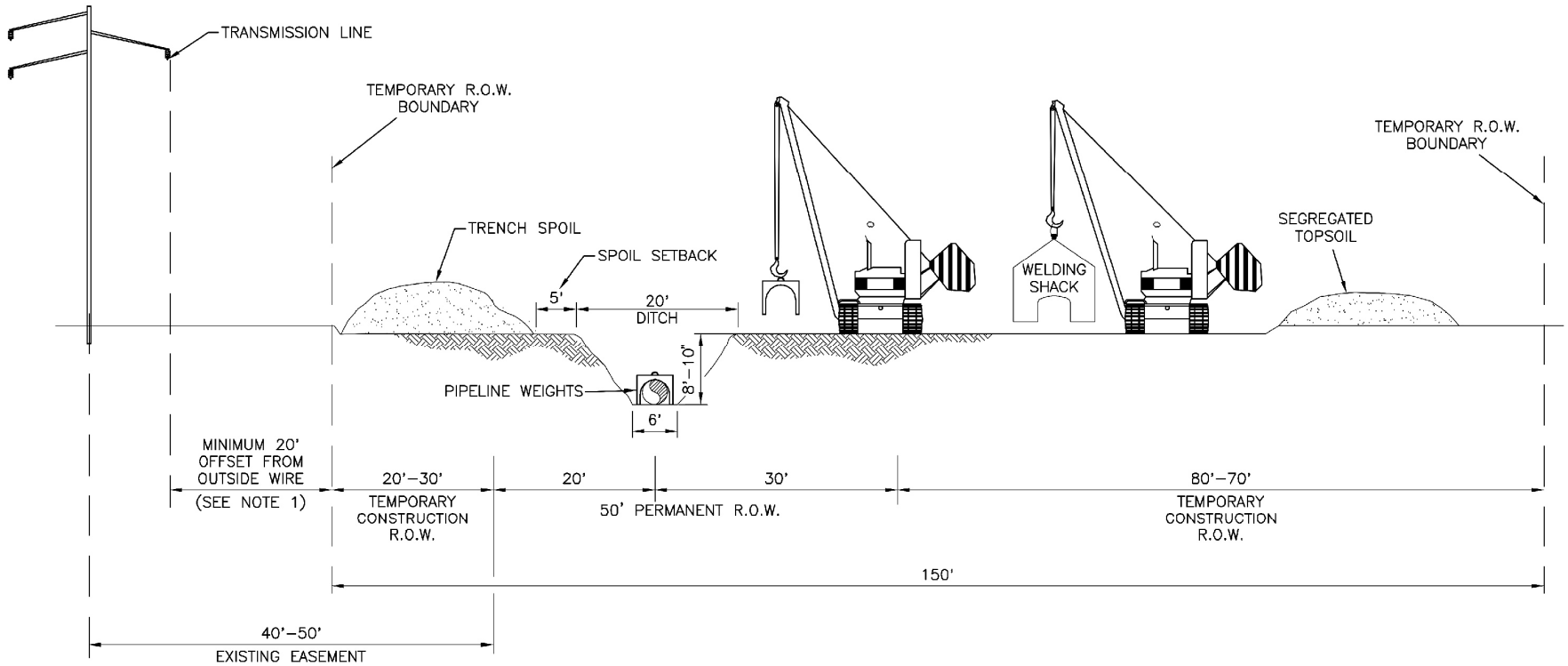

PROFILE
1"=20' HOR.
1"=20' VERT.

* FULL R.O.W. TOPSOIL SEGREGATION

** DIMENSIONS ARE TYPICAL, SEE ALIGNMENT SHEETS FOR ACTUAL RIGHT-OF-WAY CONFIGURATIONS AND CLEARING LIMITS.

NOTES:

1. FOR POWER LINES RATED 50 KV OR BELOW THE MINIMUM CLEARANCE BETWEEN THE LINES OF ANY PART OF ANY EQUIPMENT OR LOAD SHALL BE 10 FT. FOR LINES RATED OVER 50KV, THE MINIMUM CLEARANCE SHALL BE 10 FT PLUS 0.4 INCHES FOR EACH 1 KV OVER 50 KV, OR TWICE THE LINE INSULATOR. FOR LINES RATED FOR 750 KV TO 1000 KV THE MINIMUM CLEARANCE SHALL BE 20 FT. THESE PROVISIONS ARE FOR IDEAL WEATHER CONDITIONS, AND THE CLEARANCES SHALL BE GREATER UNDER MORE ADVERSE WEATHER CONDITIONS.

Appendix D, Figure D - 31

Rover Pipeline Project - Typical Right-of-Way Configurations

Rover Pipeline Typical Agricultural Crossing 20'-30' Overlap Paralleling Transmission Line

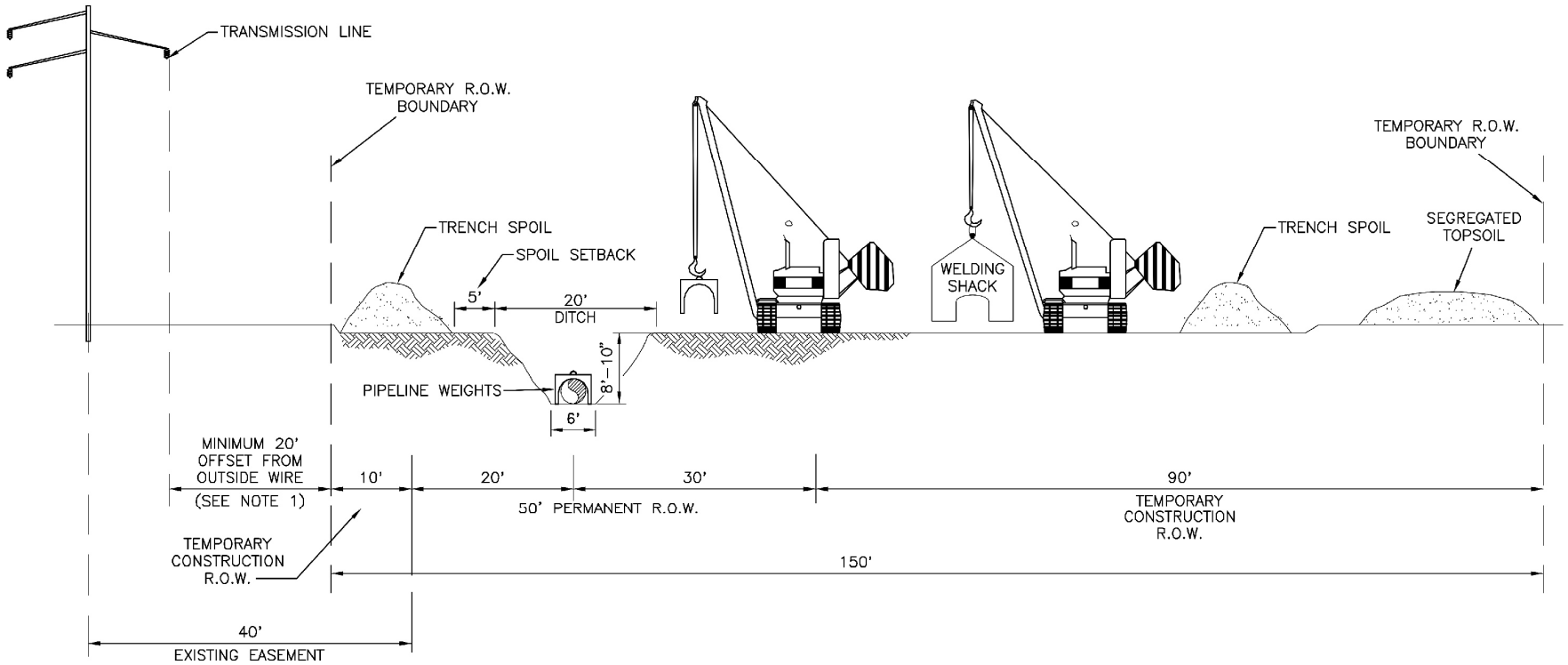

PROFILE
1"=20' HOR.
1"=20' VERT.

* FULL R.O.W. TOPSOIL SEGREGATION

** DIMENSIONS ARE TYPICAL, SEE ALIGNMENT SHEETS FOR ACTUAL RIGHT-OF-WAY CONFIGURATIONS AND CLEARING LIMITS.

NOTES:

1. FOR POWER LINES RATED 50 KV OR BELOW THE MINIMUM CLEARANCE BETWEEN THE LINES OF ANY PART OF ANY EQUIPMENT OR LOAD SHALL BE 10 FT. FOR LINES RATED OVER 50KV, THE MINIMUM CLEARANCE SHALL BE 10 FT PLUS 0.4 INCHES FOR EACH 1 KV OVER 50 KV, OR TWICE THE LINE INSULATOR. FOR LINES RATED FOR 750 KV TO 1000 KV THE MINIMUM CLEARANCE SHALL BE 20 FT. THESE PROVISIONS ARE FOR IDEAL WEATHER CONDITIONS, AND THE CLEARANCES SHALL BE GREATER UNDER MORE ADVERSE WEATHER CONDITIONS.

Appendix D, Figure D - 32

Rover Pipeline Project - Typical Right-of-Way Configurations

Rover Pipeline Typical Agricultural Crossing 10' Overlap Paralleling Transmission Line

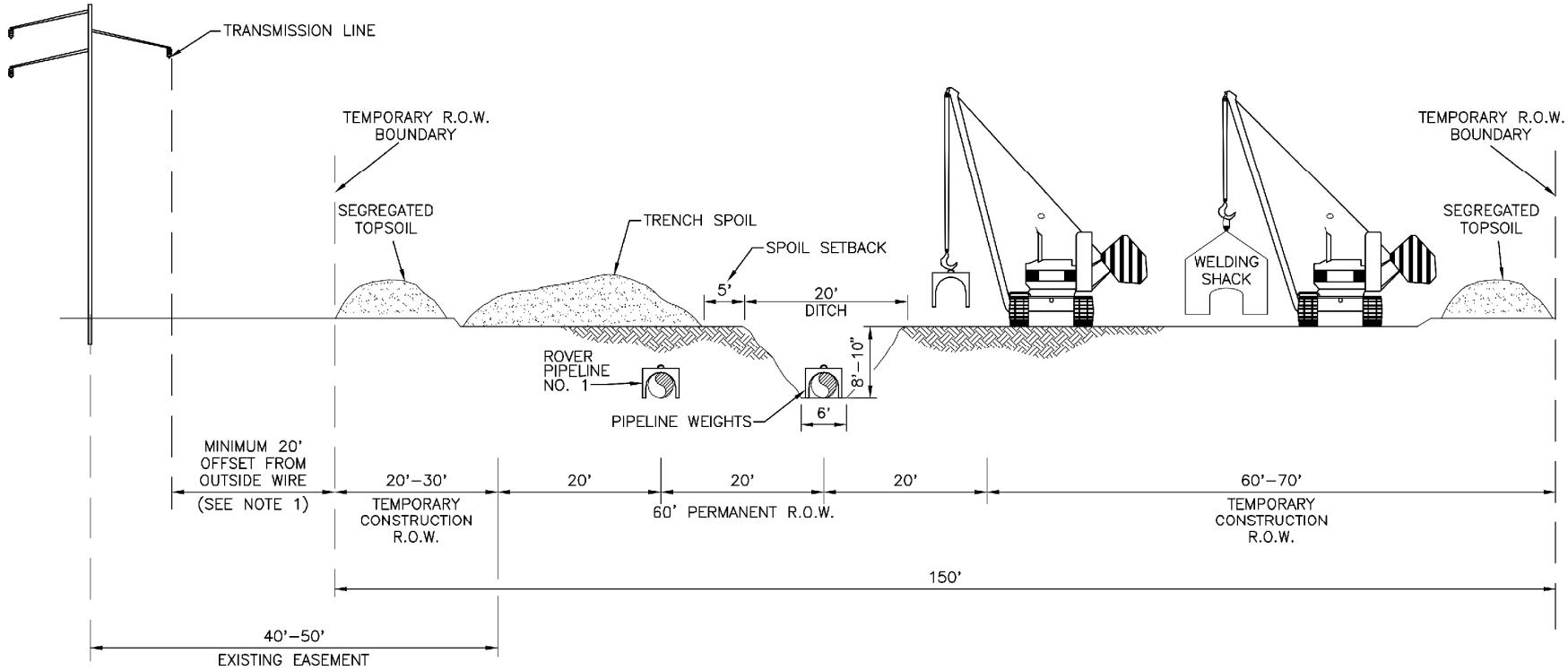

PROFILE
1"=20' HOR.
1"-20' VERT.

* FULL R.O.W. TOPSOIL SEGREGATION

** DIMENSIONS ARE TYPICAL, SEE ALIGNMENT SHEETS FOR ACTUAL RIGHT-OF-WAY CONFIGURATIONS AND CLEARING LIMITS.

NOTES:

1. FOR POWER LINES RATED 50 KV OR BELOW THE MINIMUM CLEARANCE BETWEEN THE LINES OF ANY PART OF ANY EQUIPMENT OR LOAD SHALL BE 10 FT. FOR LINES RATED OVER 50KV, THE MINIMUM CLEARANCE SHALL BE 10 FT PLUS 0.4 INCHES FOR EACH 1 KV OVER 50 KV, OR TWICE THE LINE INSULATOR. FOR LINES RATED FOR 750 KV TO 1000 KV THE MINIMUM CLEARANCE SHALL BE 20 FT. THESE PROVISIONS ARE FOR IDEAL WEATHER CONDITIONS, AND THE CLEARANCES SHALL BE GREATER UNDER MORE ADVERSE WEATHER CONDITIONS.

Appendix D, Figure D - 33

Rover Pipeline Project - Typical Right-of-Way Configurations

Dual Rover Pipelines Typical Agricultural Crossing 20'-30' Overlap Paralleling Transmission Line

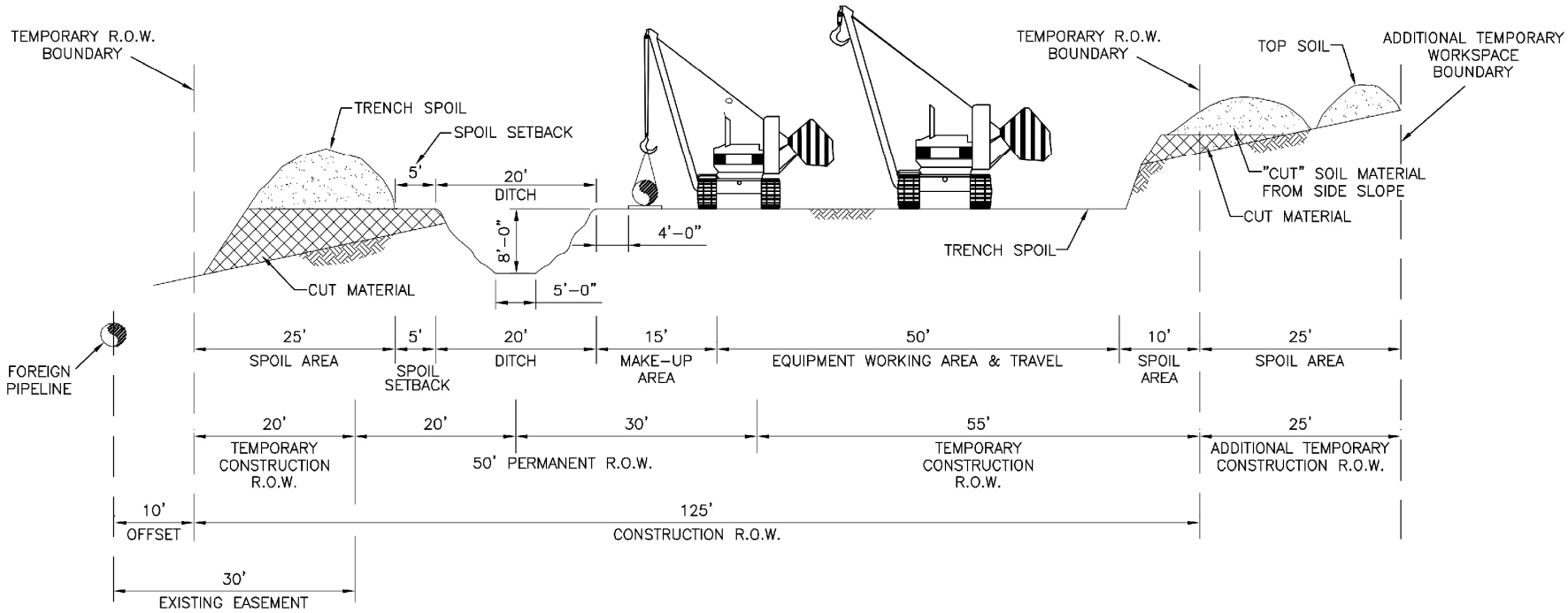

PROFILE
1"=20' HOR.
1"=20' VERT.

* DIMENSIONS ARE TYPICAL, SEE ALIGNMENT SHEETS FOR ACTUAL RIGHT-OF-WAY CONFIGURATIONS AND CLEARING LIMITS.

NOTES:

1. CONSTRUCTION RIGHT-OF-WAY WILL TYPICALLY BE 125 FEET WIDE CONSISTING OF 50 FEET OF PERMANENT EASEMENT, 75 FEET OF TEMPORARY WORKSPACE AND 25 FEET OF ADDITIONAL TEMPORARY WORKSPACE. FURTHER ADDITIONAL TEMPORARY WORKSPACE WILL BE NECESSARY AT ROAD, RAIL AND RIVER CROSSINGS AND OTHER SPECIAL CIRCUMSTANCES, AS REQUIRED. CERTAIN SITUATIONS MAY REQUIRE A NARROWER WIDTH.
2. LEAVE GAPS IN SPOIL PILES AT OBVIOUS DRAINAGES. DO NOT PUSH UPLAND SOILS INTO CANALS OR WETLANDS.

Appendix D, Figure D - 34

Rover Pipeline Project - Typical Right-of-Way Configurations

Rover Pipeline Typical Upward Side Slope Workspace Construction Area

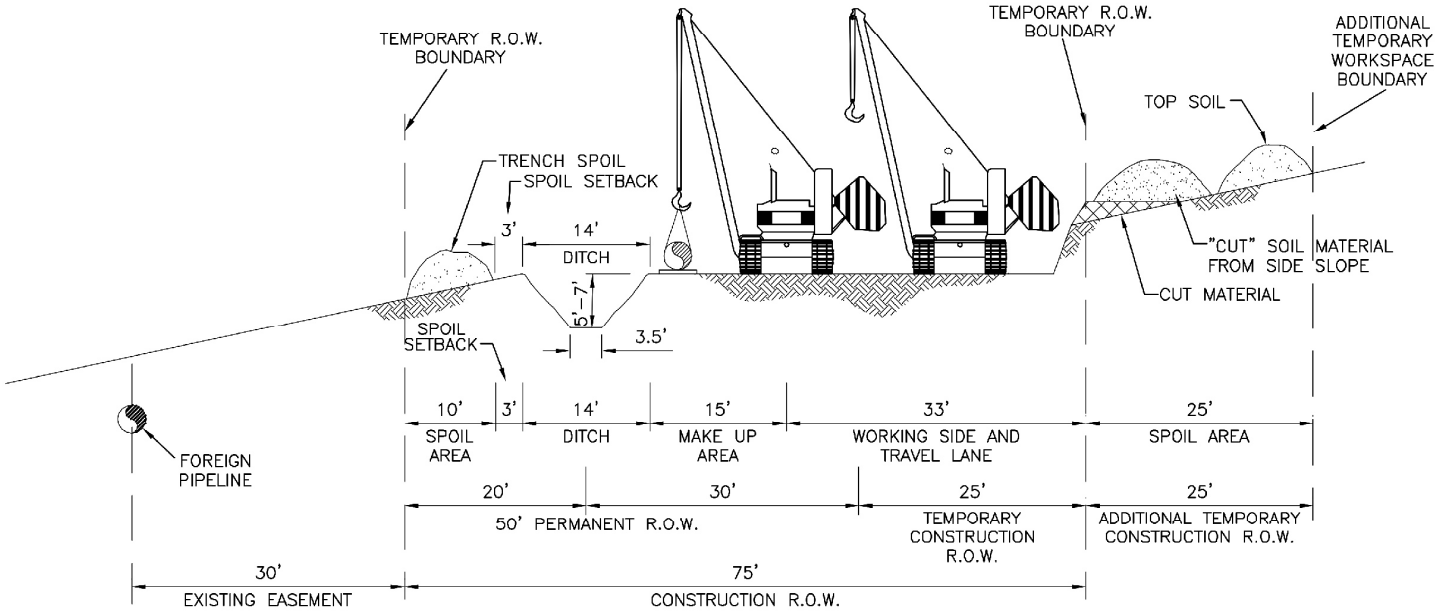

PROFILE
1"=20' HOR.
1"=20' VERT.

* DIMENSIONS ARE TYPICAL, SEE ALIGNMENT SHEETS FOR ACTUAL RIGHT-OF-WAY CONFIGURATIONS AND CLEARING LIMITS.

NOTES:

1. CONSTRUCTION RIGHT-OF-WAY WILL TYPICALLY BE 75 FEET WIDE CONSISTING OF 50 FEET OF PERMANENT EASEMENT, 25 FEET OF TEMPORARY WORKSPACE AND 25 FEET OF ADDITIONAL TEMPORARY WORKSPACE. FURTHER ADDITIONAL TEMPORARY WORKSPACE WILL BE NECESSARY AT ROAD, RAIL AND RIVER CROSSINGS AND OTHER SPECIAL CIRCUMSTANCES, AS REQUIRED. CERTAIN SITUATIONS MAY REQUIRE A NARROWER WIDTH.
2. LEAVE GAPS IN SPOIL PILES AT OBVIOUS DRAINAGES. DO NOT PUSH UPLAND SOILS INTO CANALS OR WETLANDS.

Appendix D, Figure D - 35

Rover Pipeline Project - Typical Right-of-Way Configurations

Rover Pipeline 24" CGT, Berne & Majorsville Laterals Typical Upward Side Slope No Overlap Construction Area

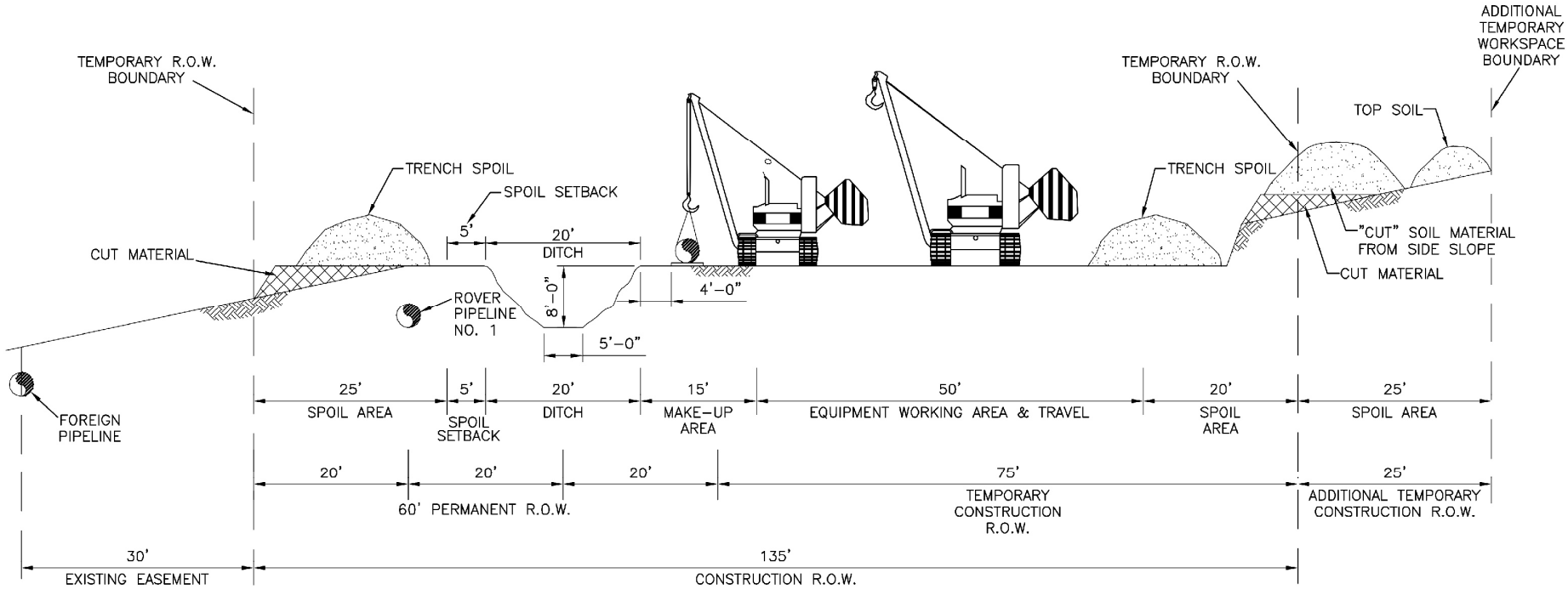

PROFILE
1"=20' HOR.
1"=20' VERT.

* DIMENSIONS ARE TYPICAL, SEE ALIGNMENT SHEETS FOR ACTUAL RIGHT-OF-WAY CONFIGURATIONS AND CLEARING LIMITS.

NOTES:

1. CONSTRUCTION RIGHT-OF-WAY WILL TYPICALLY BE 135 FEET WIDE CONSISTING OF 60 FEET OF PERMANENT EASEMENT, 75 FEET OF TEMPORARY WORKSPACE AND 25 FEET OF ADDITIONAL TEMPORARY WORKSPACE. FURTHER ADDITIONAL TEMPORARY WORKSPACE WILL BE NECESSARY AT ROAD, RAIL AND RIVER CROSSINGS AND OTHER SPECIAL CIRCUMSTANCES, AS REQUIRED. CERTAIN SITUATIONS MAY REQUIRE A NARROWER WIDTH.
2. LEAVE GAPS IN SPOIL PILES AT OBVIOUS DRAINAGES. DO NOT PUSH UPLAND SOILS INTO CANALS OR WETLANDS.

Appendix D, Figure D - 36

Rover Pipeline Project - Typical Right-of-Way Configurations

Dual Rover Pipelines Typical Upward Side Slope Workspace
No Overlap Construction Area

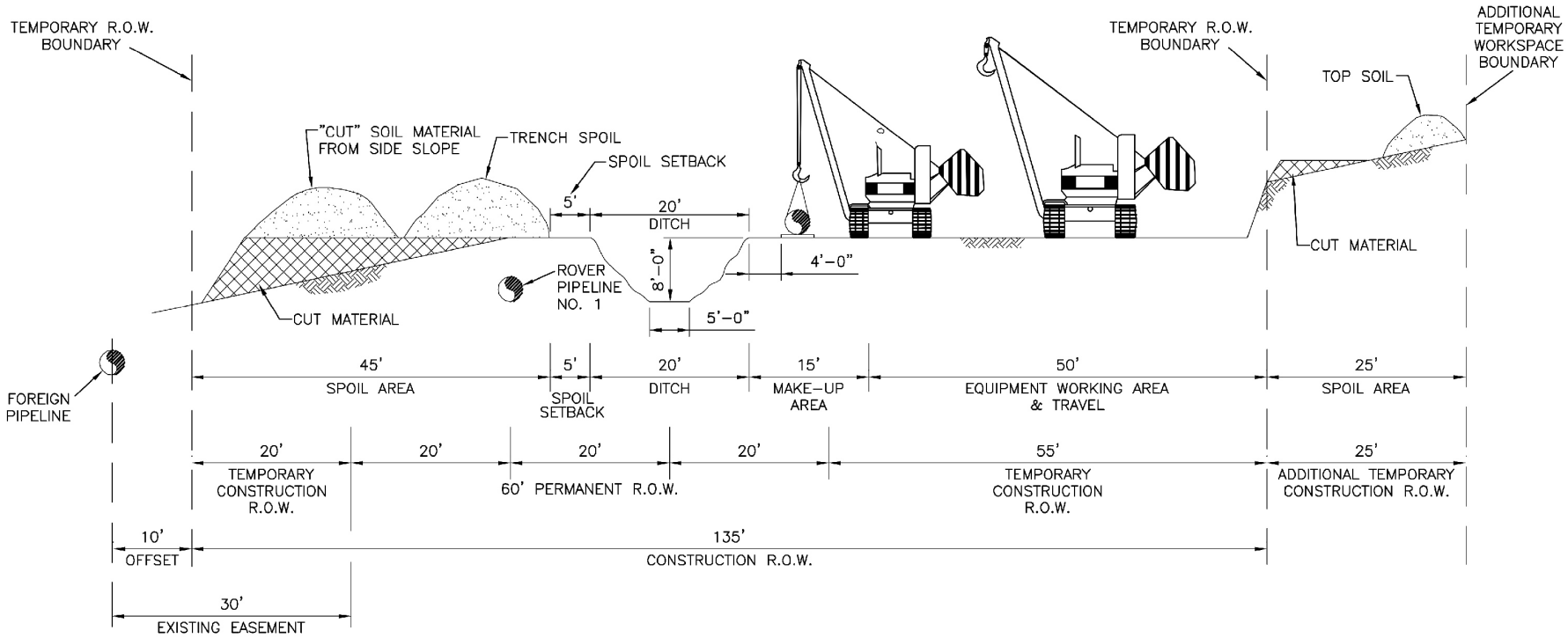

PROFILE
1"=20' HOR.
1"=20' VERT.

* DIMENSIONS ARE TYPICAL, SEE ALIGNMENT SHEETS FOR ACTUAL RIGHT-OF-WAY CONFIGURATIONS AND CLEARING LIMITS.

NOTES:

1. CONSTRUCTION RIGHT-OF-WAY WILL TYPICALLY BE 135 FEET WIDE CONSISTING OF 60 FEET OF PERMANENT EASEMENT, 75 FEET OF TEMPORARY WORKSPACE AND 25 FEET OF ADDITIONAL TEMPORARY WORKSPACE. FURTHER ADDITIONAL TEMPORARY WORKSPACE WILL BE NECESSARY AT ROAD, RAIL AND RIVER CROSSINGS AND OTHER SPECIAL CIRCUMSTANCES, AS REQUIRED. CERTAIN SITUATIONS MAY REQUIRE A NARROWER WIDTH.
2. LEAVE GAPS IN SPOIL PILES AT OBVIOUS DRAINAGES. DO NOT PUSH UPLAND SOILS INTO CANALS OR WETLANDS.

Appendix D, Figure D - 37

Rover Pipeline Project - Typical Right-of-Way Configurations

Dual Rover Pipeline Typical Upward Side Slope Workspace 20' Overlap Construction Area

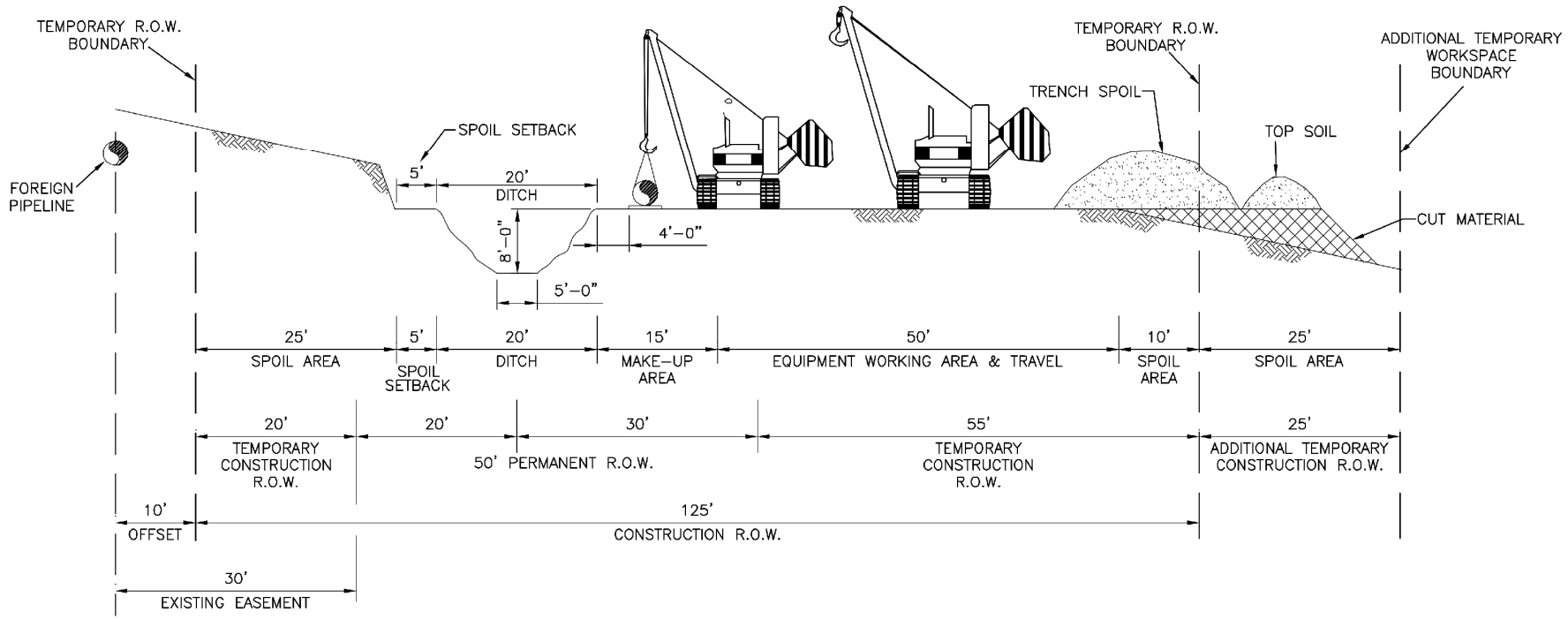

PROFILE
1"=20' HOR.
1"=20' VERT.

* DIMENSIONS ARE TYPICAL, SEE ALIGNMENT SHEETS FOR ACTUAL RIGHT-OF-WAY CONFIGURATIONS AND CLEARING LIMITS.

NOTES:

1. CONSTRUCTION RIGHT-OF-WAY WILL TYPICALLY BE 125 FEET WIDE CONSISTING OF 50 FEET OF PERMANENT EASEMENT, 75 FEET OF TEMPORARY WORKSPACE AND 25 FEET OF ADDITIONAL TEMPORARY WORKSPACE. FURTHER ADDITIONAL TEMPORARY WORKSPACE WILL BE NECESSARY AT ROAD, RAIL AND RIVER CROSSINGS AND OTHER SPECIAL CIRCUMSTANCES, AS REQUIRED. CERTAIN SITUATIONS MAY REQUIRE A NARROWER WIDTH.
2. LEAVE GAPS IN SPOIL PILES AT OBVIOUS DRAINAGES. DO NOT PUSH UPLAND SOILS INTO CANALS OR WETLANDS.

Appendix D, Figure D - 38

Rover Pipeline Project - Typical Right-of-Way Configurations

Rover Pipeline Typical Downward Side Slope Workspace Construction Area

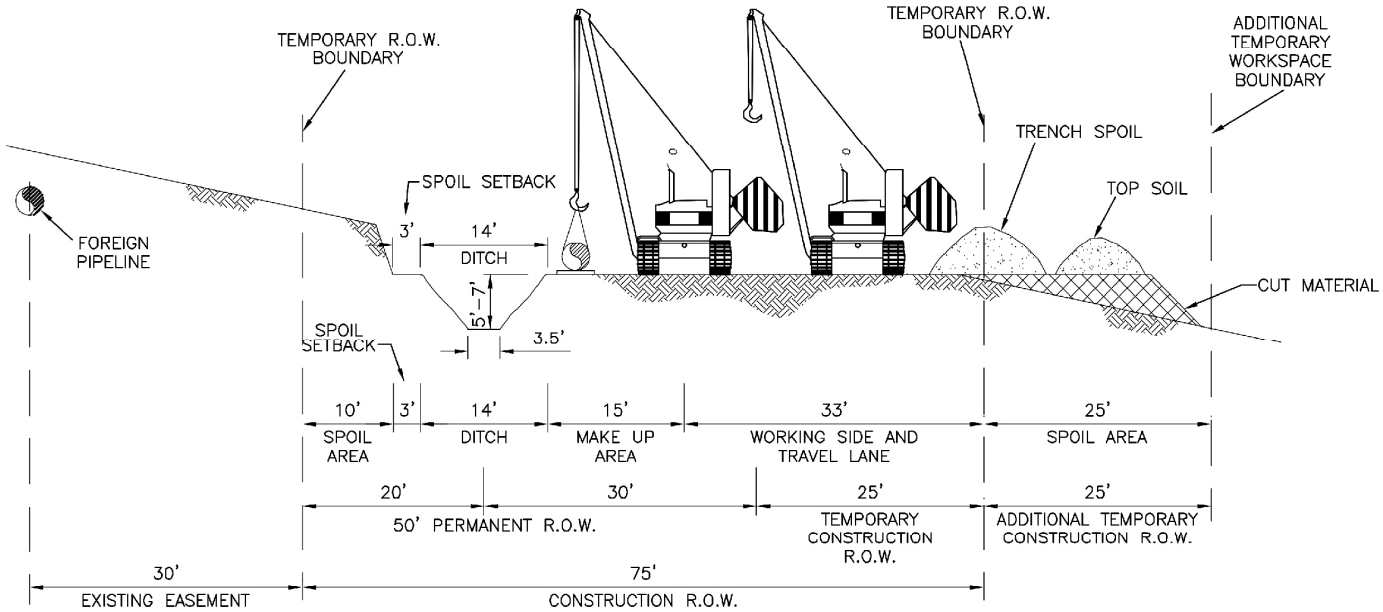

PROFILE
1"=20' HOR.
1"=20' VERT.

* DIMENSIONS ARE TYPICAL, SEE ALIGNMENT SHEETS FOR ACTUAL RIGHT-OF-WAY CONFIGURATIONS AND CLEARING LIMITS.

NOTES:

1. CONSTRUCTION RIGHT-OF-WAY WILL TYPICALLY BE 75 FEET WIDE CONSISTING OF 50 FEET OF PERMANENT EASEMENT, 25 FEET OF TEMPORARY WORKSPACE AND 25 FEET OF ADDITIONAL TEMPORARY WORKSPACE. FURTHER ADDITIONAL TEMPORARY WORKSPACE WILL BE NECESSARY AT ROAD, RAIL AND RIVER CROSSINGS AND OTHER SPECIAL CIRCUMSTANCES, AS REQUIRED. CERTAIN SITUATIONS MAY REQUIRE A NARROWER WIDTH.
2. LEAVE GAPS IN SPOIL PILES AT OBVIOUS DRAINAGES. DO NOT PUSH UPLAND SOILS INTO CANALS OR WETLANDS.

Appendix D, Figure D - 39

Rover Pipeline Project - Typical Right-of-Way Configurations

Rover Pipeline 24" CGT, Berne & Majorsville Laterals Typical Downward Side Slope Workspace Construction Area

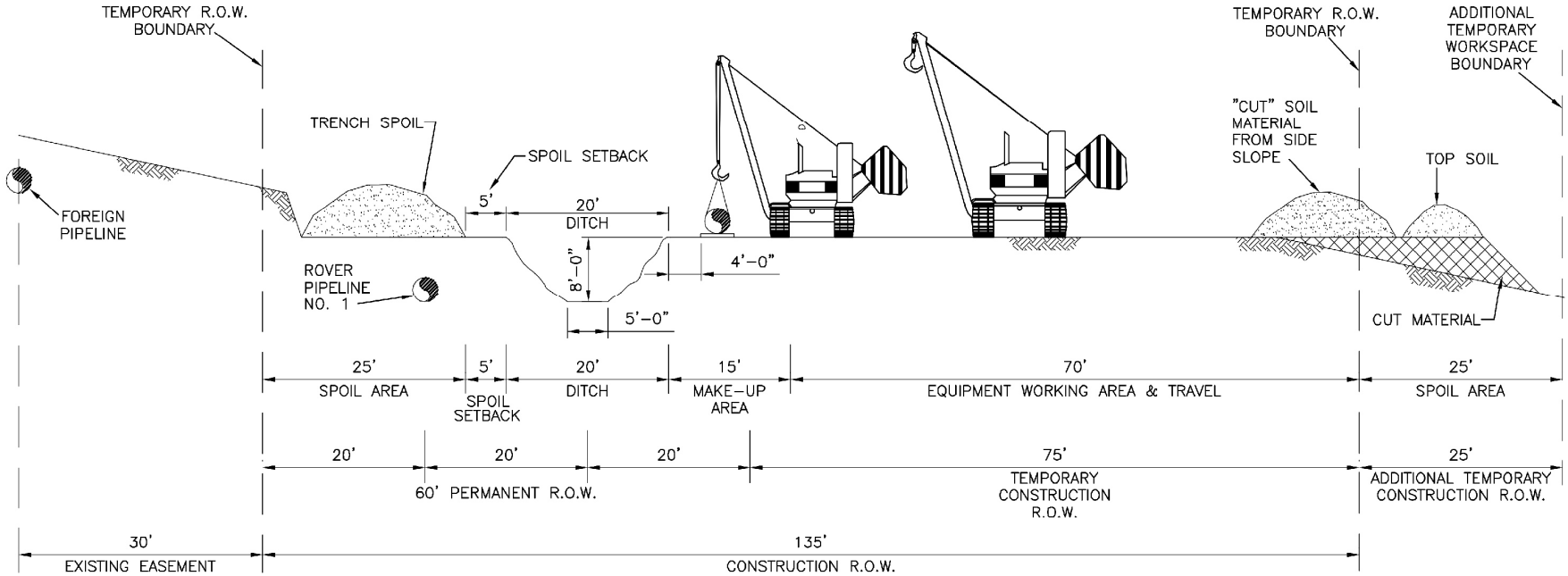

PROFILE
1"=20' HOR.
1"=20' VERT.

* DIMENSIONS ARE TYPICAL, SEE ALIGNMENT SHEETS FOR ACTUAL RIGHT-OF-WAY CONFIGURATIONS AND CLEARING LIMITS.

NOTES:

1. CONSTRUCTION RIGHT-OF-WAY WILL TYPICALLY BE 135 FEET WIDE CONSISTING OF 60 FEET OF PERMANENT EASEMENT, 75 FEET OF TEMPORARY WORKSPACE AND 25 FEET OF ADDITIONAL TEMPORARY WORKSPACE. FURTHER ADDITIONAL TEMPORARY WORKSPACE WILL BE NECESSARY AT ROAD, RAIL AND RIVER CROSSINGS AND OTHER SPECIAL CIRCUMSTANCES, AS REQUIRED. CERTAIN SITUATIONS MAY REQUIRE A NARROWER WIDTH.
2. LEAVE GAPS IN SPOIL PILES AT OBVIOUS DRAINAGES. DO NOT PUSH UPLAND SOILS INTO CANALS OR WETLANDS.

Appendix D, Figure D - 40

Rover Pipeline Project - Typical Right-of-Way Configurations

Dual Rover Pipelines Typical Downward Side Slope Workspace No Overlap Construction Area

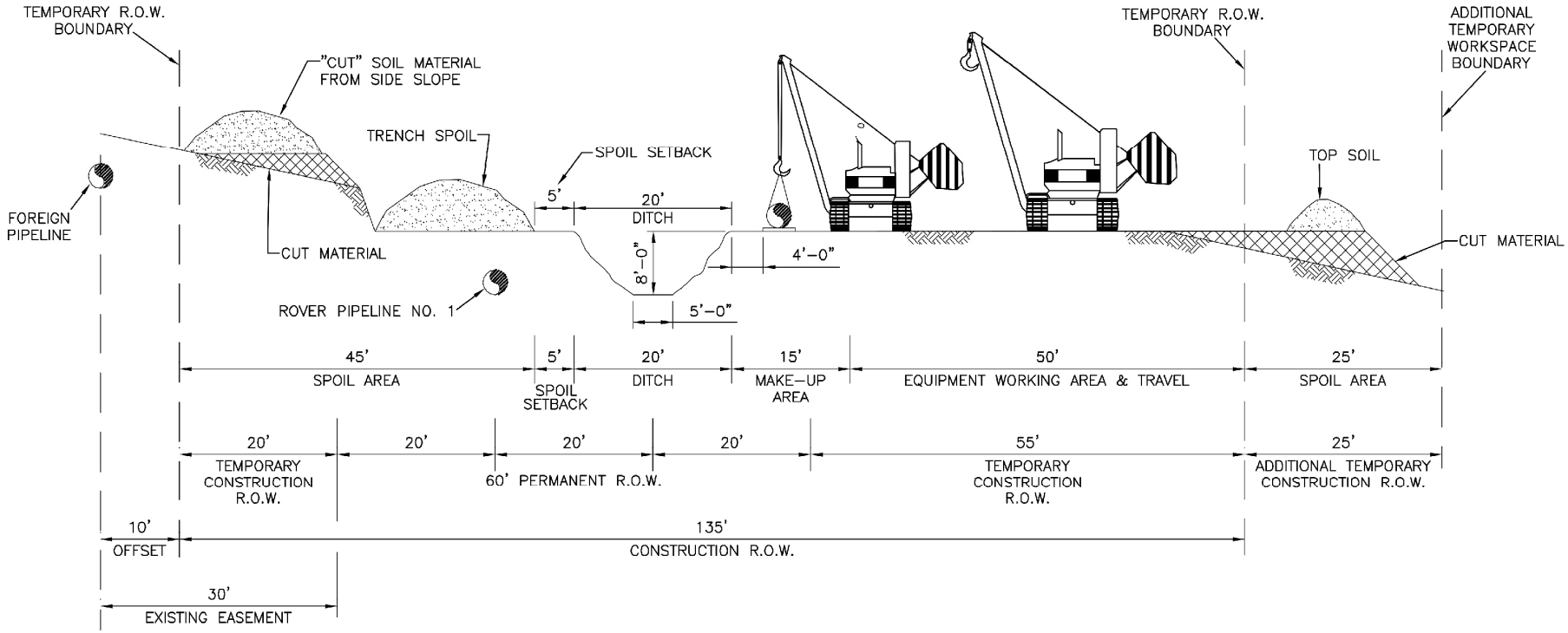

PROFILE
1"=20' HOR.
1"=20' VERT.

* DIMENSIONS ARE TYPICAL, SEE ALIGNMENT SHEETS FOR ACTUAL RIGHT-OF-WAY CONFIGURATIONS AND CLEARING LIMITS.

NOTES:

1. CONSTRUCTION RIGHT-OF-WAY WILL TYPICALLY BE 135 FEET WIDE CONSISTING OF 60 FEET OF PERMANENT EASEMENT, 75 FEET OF TEMPORARY WORKSPACE AND 25 FEET OF ADDITIONAL TEMPORARY WORKSPACE. FURTHER ADDITIONAL TEMPORARY WORKSPACE WILL BE NECESSARY AT ROAD, RAIL AND RIVER CROSSINGS AND OTHER SPECIAL CIRCUMSTANCES, AS REQUIRED. CERTAIN SITUATIONS MAY REQUIRE A NARROWER WIDTH.
2. LEAVE GAPS IN SPOIL PILES AT OBVIOUS DRAINAGES. DO NOT PUSH UPLAND SOILS INTO CANALS OR WETLANDS.

Appendix D, Figure D - 41

Rover Pipeline Project - Typical Right-of-Way Configurations

Dual Rover Pipelines Typical Downward Side Slope
Workspace 20' Overlap Construction Area