Appendix L

Stray Voltage Supplement

Literature Review and Synthesis of Research Findings on the Impact of Stray Voltage on Farm Operations

Prepared by

Douglas J. Reinemann, Ph.D.

For the

Ontario Energy Board

31 March 2008

Disclaimer: The views expressed in this paper are those of Douglas J. Reinemann Ph.D. and do not necessarily represent the views of, and should not be attributed to, the Ontario Energy Board, any individual Board Member, or Board staff.

Executive Summary

This report synthesizes the main findings and conclusions of the body of scientific literature on the potential for tingle voltage (or stray voltage) or at power frequencies (50 to 60 Hz), to directly or indirectly affect farm output or productivity. The report includes:

- A review of scientific literature,
- A description of the symptoms indicative of the presence of tingle/stray voltage,
- Descriptions of the pathways whereby tingle/stray voltage can have an impact on farms,
- An indication, by animal type, of the minimum voltage and current level at which impacts on farm operations can be expected,
- A description of the on-farm measures available for mitigating tingle/stray voltage, and
- The range of regulatory measures that have been adopted to achieve the objective of ensuring that tingle/stray voltage does not unduly impact farm operations.

The direct effect of animal contact with electrical voltage can range from:

- Mild behavioral reactions indicative of sensation, to
- Involuntary muscle contraction – or twitching, to
- Intense behavioral responses indicative of pain,

The indirect effects of these behaviors can vary considerably depending on the specifics of the contact location, level of current flow, body pathway, frequency of occurrence, and many other factors related to the daily activities of animals. There are several common situations of concern in animal environments:

- Animals avoiding certain exposure locations which may result in,
    - Reduced water intake that may result if painful exposure is required for animals to access watering devices,
    - Reduced feed intake that may result if painful exposure is required for animals to accesses feeding devices or locations,
- Difficulty of moving or handling animals in areas of annoying voltage/current exposure,
- The release of stress hormones produced by contact with painful stimuli.

The review of literature in this study used published studies that included data from controlled experiments and field studies. This review synthesizes these studies and summarizes the conclusions of hundreds of researchers to provide the basis for a consensus view of the scientific community.

The majority of tingle/stray voltage research has been done on dairy cows. The accepted practice by researchers and regulators has been to assume worst-case (lowest practical values) for cow contact resistances. Studies done to measure more typical body + contact resistances that would occur on farms have shown that 500 Ohms to 1000 Ohms is a reasonable range to use in a measurement circuit to estimate the current that would flow through a cow's body. The most sensitive dairy cows may experience mild behavioral modifications at current exposures exceeding 2 milli-Amps (60 Hz AC rms) corresponding to 1 Volt to 2 Volts (60 Hz, AC rms) of cow contact exposure in farm exposure situations. Aversion and metabolic changes have been documented to require substantially higher voltage and current exposures. It has also been shown that the equivalent to 2 mA of 60 Hz AC current (2 Volts of 60 Hz AC rms voltage) is about 2.8 mA of DC current (2.8 Volts DC). In addition dairy cows are much less sensitive to high frequency or short duration electrical exposures than for 60 Hz rms AC current (A much

higher current is required to elicit the same response). Numerous studies have documented that cows rapidly acclimate very quickly to even very high levels of voltage/current exposure and behavioral modifications become less pronounced in a matter of several days.

Research suggests swine respond to voltage/current exposure in a similar way to cows. Behavioral modification has been observed at about 5 Volts with avoidance behaviors at exposures of 8 V. The body + contact resistance for swine appears to be somewhat higher than for cows and 1000 Ohms appears to be a conservative value for measurement purposes.

Neuro- electric principles suggest that the current sensitivity of sheep is lower than for cows, but that their body resistance is higher than cows. Ewes have been shown to avoid electrified feed bowls when exposure levels exceed 5.5 V while Lambs showed this same preferential behavior when exposure levels exceeded 5 V.

Exposures to voltages as high as 18 V had no effect on the hens' production and behavior. This is likely due to the very high electrical resistance of poultry which has been documented to be between 350,000 and 544,000 Ohms.

The source of stray voltage is a voltage that is developed on the grounded neutral wiring network of a farm and/or the electric power delivery system. The magnitude of the voltage source is a product of the current flowing on the neutral system and the resistance of that neutral system. Grounding is provided to keep the voltage potential between the neutral system and the ground below levels that could be harmful to people or animals. Neutral-to-earth, or stray voltage can be reduced in three fundamental ways:

- reduce the current flow on the neutral system,
- reduce the resistance of the neutral system, or
- Improve the grounding of the neutral system

The first step in a competent stray voltage investigation is to determine the major sources of neutral-earth voltage. Any major faults or code violations in the wiring system that could pose an electrocution hazard or are a major source of neutral to earth voltage should be corrected immediately. If the wiring systems (farm and utility) are operating correctly then the above three actions can be assessed to determine which is most practical, safe and efficient way to reduce neutral-earth voltage. Equipotential planes are effective in eliminating contact potentials even if substantial levels of neutral-to-earth voltage are present.

Several jurisdictions have conducted scientific and technical reviews and held public hearings to address concerns and inform public policy on stray voltage issues. Some States have adopted regulations dealing with stray voltage while others have developed multi-agency and stakeholder groups to develop guidelines and standard practices. State regulations generally relate to the maximum utility contribution to on-farm voltage levels (since most only have regulatory authority over investor owned utilities) while stressing the importance of reducing on-farm sources of neutral voltage through compliance with wiring codes and good management practice.

Contents

1 Introduction 1
1.1 Scope of this Report 1
1.2. Ways That Stray, or Tingle, voltage Can Impact Farm Operations 2
1.2.1. Direct effects 2
1.2.2. Indirect effects 2
2. Overview of Electrical Exposure and the Physiology of Animal Contact voltage and Current 4
2.1. Basic concepts of voltage, current, and resistance 4
2.1.1. The Problem of Contact Resistance 7
2.2 – Nerve Stimulation and Response 8
2.2.1 The Bio-mechanics of Nerve Stimulation 8
2.2.2. Behavioral Responses to voltage exposure 9
3. History of Stray voltage Studies and Evolution of Experimental Techniques 10
3.1. Methods Used In This Literature Review 10
3.2. Early studies in New Zealand 10
3.3. Early North American Studies 11
3.4. United States Department of Agriculture Research 12
3.5. The University of Minnesota 12
3.6. Cornell University 13
3.7. University of Missouri 15
3.8. New Liskeard Study 15
3.9. Field Studies and Case Studies 16
3.10. USDA-ARS Handbook 696: Effects of electrical voltage/current on farm animals 18
3.11. Studies after publication of USDA 696 20
3.12. Cornell University II 20
3.13. University of Wisconsin 21
3.14. AgroParisTech 23
3.15. Minnesota Science Advisors Study 24
3.16. University of Wisconsin II 26
3.17. Recent Dairy Field Studies 27
3.18. Other Species 28
3.18.1. Swine 28
3.18.2. Sheep 30
3.18.3. Poultry 31
3.19. Summary and Synthesis of Research 32
3.19.1. Compilation of Dairy Cow Reponses to Current Dose 32
3.19.2. Compilation of Dairy Cow Reponses to Constant voltage Exposures 37
3.19.3. The Solution to Contact Resistance 42
3.19.4. Animal Health and Production 42

4. voltage/Current Sensitivity by Contact Location and Animal Type 44
4.1. Exposure at watering devices 44
4.1.1. Contact pathways and risk reduction 44
4.1.2. Symptoms of exposure and other causes of these symptoms 45
4.1.3. voltage/Current Sensitivity levels 45
4.2. Exposure at feeding devices 46
4.3. Exposure during milking 47
4.4. Exposure at building transitions 48
5. Mitigation Measures 49
5.1. On-Farm Mitigation Measures 49
5.1.1. Farm Wiring 49
5.1.2. Equipotential Planes 49
5.1.3. On farm isolation, Filters, and voltage Suppression 50
5.2. Utility Mitigation Measures 50
5.2.1. Distribution Wiring 50
5.2.2. Neutral Isolation 50
5.3. Mitigating Other Sources 51
6. Regulatory Approaches and Guidelines to Reducing the Impact of Stray voltage on Farm Operations 52
6.1. Wisconsin 52
6.1. Michigan 54
6.3. Vermont 55
6.4. Idaho 55
6.5. Minnesota 55
6.6. New York 56
6.7. Pennsylvania 56
Bibliography 58

1 Introduction

1.1 Scope of this Report

The general scope of this report is to synthesize the main findings and conclusions of the body of literature on the potential for tingle voltage, or stray voltage to directly or indirectly affect farm output or productivity. The specific elements of this report include:

- A **literature review** on the effects of stray voltage on farm animals Including;
  - A review and synthesis of academic, industry, government agency and other sources of information, with publications from 1990 onwards being the main focus. Earlier publications have been included where important and appropriate.
  - These publications form a comprehensive review of all studies in which farm animals have been exposed to voltage or current sources and are divided into two general categories; controlled studies in which exposure (or dose) levels and responses have been documented and field studies in which exposures and responses have not been recorded as accurately (or at all). A discussion of conclusions that can be drawn from each type of study anda comparison of these studies is included in this report
- A description of some common **symptoms** associated with the presence of stray voltage is provided along with a discussion of other causes that can give rise to these same symptoms is presented.
- A description of the exposure **pathways** whereby stray voltage can have an impact on farm operations.
  - Details are provided, where available, as to variations in the electrical components of various contact pathways
  - Differences in impacts associated with variations in exposure duration, exposure level, contact pathway and animal type are discussed.
- An indication, by animal type, of the **minimum voltage (or current) level** at which impacts on behavior, health, reproductive success and productivity and overall farm operations would be expected.
- A description of the on-farm measures available for mitigating stray voltage with their respective level of effectiveness at reducing or eliminating impact of stray voltage from all sources (on- and off-farm) on farm operations.
- The range of regulatory measures that have been adopted to achieve the objective of ensuring that stray voltage does not unduly impact farm operations.

1.2. Ways That Stray, or Tingle, voltage Can Impact Farm Operations

The terms stray voltage and tingle have been used for about the past 40 years to describe a special case of voltage developed on the grounded-neutral system of a farm. The definition of stray (or tingle) voltage accepted by the scientific community is that it is a low-level electrical shock that can produce sensation or annoyance in farm animals[1].

1.2.1. Direct effects

The direct effect of animal contact with electrical voltage and the resulting current flowing through their bodies can range from:

- Mild behavioral reactions indicative of sensation, to
- Involuntary muscle contraction – or twitching, to
- Intense behavioral responses indicative of pain,

The severity of response will depend upon the amount of electrical current (usually measured in milliamps, mA) flowing through the animal's body, the pathway it takes through the body and the sensitivity of the individual animal.

1.2.2. Indirect effects

The indirect effects of these behaviors can vary considerably depending on the specifics of the contact location, level of current flow, body pathway, frequency of occurrence, and many other factors related to the daily activities of animals. There are several common situations of concern in animal environments:

- Animals avoiding certain exposure locations which may result in;
    - Reduced water intake that may result if painful exposure is required for animals to access watering devices,
    - Reduced feed intake that may result if painful exposure is required for animals to accesses feeding devices or locations,
- Difficulty of moving or handling animals in areas of annoying voltage/current exposure,
- The release of stress hormones produced by contact with painful stimuli.

The levels of voltage exposure and current flow through animals required to produce these various behaviorally mediated responses are identified in the summary of research studies in section 3.

A number of studies have been done to investigate direct physiological effects that may be produced at levels **above** those that produce behavioral changes, as well as potential detrimental physiological responses that may result from animals' exposure to voltage/current **below** levels which may produce

---

[1] Stray voltage is defined in a Handbook published by the United States Department of Agriculture as a small voltage (less than 10 V) measured between two points that can be contacted simultaneously by an animal. Because animals respond to the current produced by a voltage and not to that voltage directly, the source of the voltage must be able to produce current flows greater than the threshold current needed to elicit a response from an animal when an animal, or an equivalent electrical load, contacts both points (Lefcourt, 1991).

sensation and behavioral response. These studies have shown that increased concentrations of the stress hormone cortisol do not occur at levels below behavioral response levels and only become apparent in some, but not all cows, at substantially higher voltage/current exposures than the threshold required for behavioral modification, and typically at levels that produce severe behavioral changes and probably at current levels that produce discomfort and/or pain. Furthermore, the failure of several experimental and field studies to demonstrate detrimental effects of current exposure on the incidence of mastitis (an infection of the mammary gland) and immune function response indicate that the levels of voltage/current exposure that elicit behavioral changes do not compromise the immune function of dairy cows.

2. Overview of Electrical Exposure and the Physiology of Animal Contact voltage and Current

2.1. Basic concepts of voltage, current, and resistance

The relationship between voltage exposure and current conducted through the animal is described by Ohms Law[2]. This simple relationship has been a source of much confusion and resulting controversy in the stray voltage debate. One way to think about electricity is that voltage is the driving force and current is the resulting movement of electrons through the resistance of the wire (or animal). It **is possible** to have a voltage source with no resulting current flow if the resistance value is infinite (as is the case when a switch is turned off, or a valve is shut). It is **not possible** to produce current flow in the absence of voltage, regardless of the resistance of the circuit.

While the contact voltage is often used to describe animal exposure conditions, it is the resulting current flowing through animals' bodies that determines the 'dose' and the resulting type and degree of nerve stimulation. The exposure (voltage) and the dose (current) are related by the resistance (measured in Ohms) of various parts of the electrical circuit.

It is critically important to use a realistic value of animal resistance (or impedance[3]) to relate voltage exposures to the level of current conducted through an animal and the resulting effects on nerve stimulation, sensation and behavioral reaction. Figures 1 and 2 illustrate the elements of the electrical circuit that occurs when an animal comes into contact with a voltage source.[4]

---

[2] Ohm's law expresses the relationship between voltage, Current and Resistance in an electrical circuit.

A common form of Ohm's Law is: $\textit{Current (Amps)} = \frac{\textit{Voltage (Volts)}}{\textit{Resistance (Ohms)}}$

Ohms law indicates that if the voltage (across animal contact points) is increased, the current flowing through the animal will increase. Likewise, if the resistance (of contact points) is increased, the current flowing through the animal will decrease. The current measure used in many stray voltage studies is milli-Amps or 1/1000th of an Amp. The measurement circuit used for field investigations uses a 500 Ohm Resistor to simulate the combined resistance of a cow's body + conservative estimates of the resistance of the two contact points. Using these values a cow contact current of 2 mA would result from a cow contact voltage of 1 V and a cow+contact resistance of 500 Ohms.

$$\textit{Current}\left(\frac{1}{500}\textit{ Amps} = \frac{2}{1000}\textit{Amps} = 2\textit{ Milliamps}\right) = \frac{1\textit{ Volt}}{500\textit{ Ohms}}$$

[3] Resistance refers to the physical properties of materials while impedance incorporates capacitive and inductive elements. Impedance is a more technically specific term for AC circuits but resistance will be used here for simplicity. There are some special cases in which capacitive and inductive elements must be considered and these will be noted.

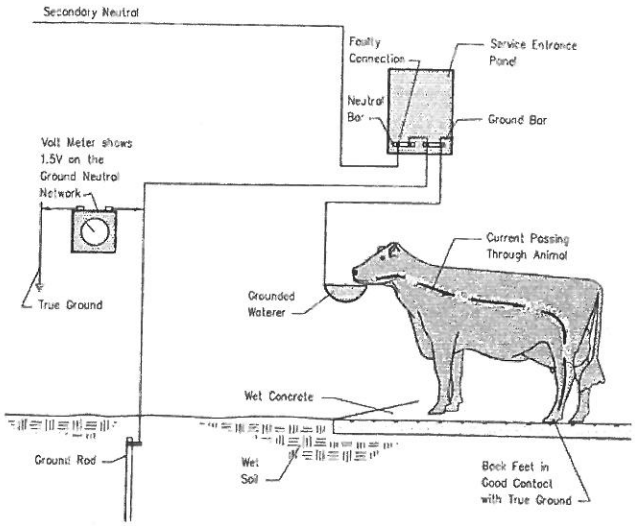

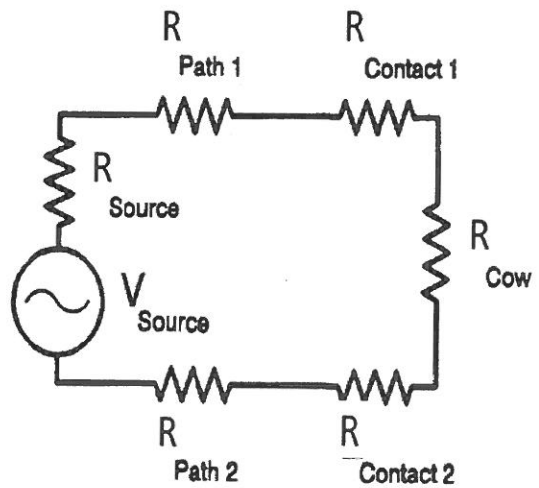

Figure 1. Cow drinking from a water bowl. **Figure 2. Elements of the electrical circuit.**

The source circuit is represented by the left half of Figures 1 and 2.

- V_{source} = the source voltage, usually a voltage drop developed by current flowing through the resistance of neutral wires. V_{source} is also referred to as open circuit voltage and is the voltage between two animal contact points/areas measured without a shunt resistor.
- R_{source} = the internal resistance of the source, in our example, the resistance of the neutral wire. The three resistances in the source circuit are commonly grouped together into a single source resistance ($R_{source} = R_{path1} + R_{path2} + R_{source}$).
- R_{path1} = the resistance of the path from the voltage source (neutral wire) to the water bowl. If the farms grounding system is well bonded (or electrically connected) this resistance will be very low. If the farm is not well bonded this resistance can be very high.
- R_{path2} = the resistance of the path from the floor back to the source, in this example the resistance of the concrete floor, the earth itself, and the grounding connection back to the neutral wire. If the farm has an equipotential plane that is bonded to the grounded neutral system this value can be very low. If the farm does not have an equipotential plane this value can be very high.

The animal circuit is represented by the right half of Figure 2 and the Cow and its muzzle and hoof contact points in Figure 1. The three elements of the animal circuit are commonly grouped together to form an equivalent animal+contact resistance (500 Ohms for cows) for measurement purposes. This is the value of the shunt resistor used to estimate current flow though an animal.

- R_{body} = the body resistance of the animal across the contact pathway, in our example muzzle to 4 hooves.
- $R_{contact1}$ = the resistance of contact point 1, usually the animals mouth/muzzle or front hooves/feet. This resistance value can be quite low in the case of a wet muzzle in firm contact with a wet metal plate. There are other situations in which this resistance value is quite high such as muzzle contact through feed on a metal feed bowl or an animal's muzzle in a water tank, without making contact with the walls of the tank.
- $R_{contact2}$ = the resistance of contact point 2, usually the animals 4 hooves/feet or rear hooves/feet. This resistance value is also quite variable from relatively low values for animals standing on clean water pooled surfaces to very high values for animals standing on surfaces covered with debris, manure, bedding, etc.

Correct measurement technique involves cleaning the contact surfaces and wetting them with a conductive solution to eliminate the contact resistances. These contact resistances are then added back into the animal body resistance to provide a realistic animal+contact resistance value that is used as the 'shunt' resistor in the measurement circuit. Scenarios illustrating the importance of understanding the resistive components of the electrical circuit are presented in Table 1.

Table 1. Examples of Cow Contact Circuit Resistance Values.

V(source)[1]	R(Source)[2]	R(cow + contact)[3]	V(cow contact)[4]	Current through cow[5]
1 V	100 Ohms[6]	500 Ohms[7]	0.8 V[8]	1.7 mA
1 V	100 Ohms[9]	1,000 Ohms[10]	0.9 V[8]	0.9 mA
1 V	1,000 Ohms[12]	1,000 Ohms[10]	0.5 V[11]	0.5 mA

Notes:

[1] Vs, Also referred to as open circuit voltage measured without a shunt resistor.

[2] Rs, combining internal resistance of the source and path resistances to contact points

[3] Rcc, combining animals body resistance and 2 contact resistances (muzzle to water bowl and hooves to floor, or front hooves to floor and rear hooves to floor)

[4] Vcc, Also referred to as the exposure level. Vcc = Rcc / (Rs + Rcc)

[5] Ic, or the dose level which determines nerves stimulation. Ic = Vcc / Rcc

[6] A farm on which conductive elements are well connected to the grounding system.

[7] Rcc = 350 Ohms cow + 150 Ohms, or a cow standing on a clean wet concrete floor and drinking from a metallic water bowl.

[8] Cow contact voltage is somewhat less than the source or open circuit voltage.

[9] A farm on which conductive elements are well connected to the grounding system.

[10] Rcc = 350 Ohms cow + 650 Ohms Contacts, or a cow standing on dry concrete with minimal debris.

[11] Cow contact voltage is considerable lower than the source or open circuit voltage.

[12] A poorly bonded farm, metallic objects in animal areas not grounded.

The examples in Table 1 illustrate that for the same source voltage (measured 'open circuit' with no shunt resistor) the resulting animal current (or dose) varies by a factor of 3. Changes in the contact resistance, resulting from small differences in the animal environment, changed the current dose by a

factor of 2. While a poorly bonded farm, in which metallic objects in animal areas are not connected to the farms grounded neutral system, produced less current through an animal, there is also a much higher risk of electrocution because the lack of proper grounding can cause breakers to fail, and expose people and animals to lethal voltage in the event of an electrical fault.

Source resistance values also show variability depending on the quality of bonding and local soil conditions on each individual farm. Measurement of the source resistance is essential in assessing voltage/current exposure risk and is an essential part of stray voltage measurement technique. Once these source resistance values have been measured on an individual farm they show relatively little variation, unless the farm wiring system is altered.

2.1.1. The Problem of Contact Resistance

The body resistance of several species of farm animals through various body pathways has been measured in several studies. Measures of an animal's body resistance depends on the pathway between the contact points (e.g. muzzle-hoof or hoof-hoof) and the way in which the contact is made including factors such as the area over which the contact is made, pressure applied to the contact, and use of conductive liquids or gels on the measurement connection.

Some studies have tried to isolate the body resistance of animals using contact conditions not encountered in normal farm operations such as:

- removing contact resistance by injecting voltage/current under the skin (Gorewit, 1985)
- Applying current through EKG patches applied to shaved skin (Lefcourt, 1985)
- Minimizing contact resistance by providing extremely low contact points at the hoof (such as wetted expanded metal plates) and/or muzzle (bits or nose clips) (Norell, 1983; Currence, 1990; Reinemann, 1999; Aneshansley, 1999).

The lowest body resistance values have been reported when the skin of the animal was pierced using needles. The next lowest category of body resistances include measurement electrodes affixed to shaved patches of skin. The majority of body resistance measurements have been made with cows coming into contact with a metallic device such as: standing on a metal plate, standing on a metallic mesh, metallic bit in the animals' mouth, metallic clip applied to the animals' nose. Definition of the body pathway and mode of contact will allow a reasonable estimate to be made of an animals' body resistance and reasonable population estimates are available for cows and swine for typical pathways (mouth-feet, foot-foot).

Contact resistances are the most difficult value to predict in real-world farm situations. Fewer studies have been done to characterize real-world contact resistances. It is clear from these studies as well as physical principles that real-world contact resistances have enormous variability. The lowest contact resistances would be expected if a clean, wet body part (such as a cow's muzzle) comes into contact with a clean, wet, metallic object with a substantial mutual contact area and substantial contact pressure. Contact resistances will increase with:

- smaller contact surface area (e.g. a point contact the size of a pencil eraser compared to a metal plate applied over a surface the size of your hand)

- reduced contact surface pressure (e.g. a light touch versus a contact applied with the weight of an animal)
- drier contact surfaces
- the amount of debris on either the animal contact point (e.g. bedding/manure impacted in hooves or feed at the muzzle)
- the resistance value of the debris at the contact margin (e.g. dry straw compared with wet manure)

The accepted practice by researchers and regulators has been to assume worst-case (lowest practical values) for contact resistances. Studies done to measure more typical body+contact resistances that would occur on farms (Lefcourt, 1991; Reinemann, 2005) have shown that 500 Ohms to 1000 Ohms is a reasonable value to use in a measurement circuit to estimate the current that would flow through a cow's body. Although the resistance of the cows body is typically less than 500 Ohms for the muzzle to hoof pathway (other pathways have a higher resistance), it has been shown to be a 'worst case' or minimum resistance value for the combination of a dairy cows body + real-world contact resistance in the farm environment.

There have been fewer studies on other species, but the same principle will apply to any animal contact situation. A review of each species and common contact points is included in section 4 of this report.

2.2 – Nerve Stimulation and Response

2.2.1 The Bio-mechanics of Nerve Stimulation

Behavioral responses are the result of nerve stimulation that elicits a sensation and/or muscle contraction in an animal. The bio-mechanics of nerve stimulation with electrical exposure has been widely studied and is well understood[5]. Nerve stimulation is characterized by a current threshold. Current applied below the threshold will not produce nerve excitation, and hence no sensation, motor response or behavioral response can occur (Figure 3). At the current level just above the threshold of nerve excitation sensation will result, which may be perceived but is not painful. As the current level is increased above the threshold involuntary muscle contraction begins to occur. This lower margin of muscle contraction is not painful. Pain can be experienced at as current exposures are increased further due to both increased sensory stimulation and more intense muscle contraction.

[5] *The 1998 text Applied Bioelectricity: from Electrical Stimulation to Electropathology by J.P Reilly is a definitive reference on the biomechanics of nerve stimulation and resulting pathologies. This text summarizes the vast body of research on electrical stimulation over the past 100 years or more. Electrical properties animal tissues are described. The use of electrical stimulation for beneficial medical purposes is covered as well as pathological exposures that may result in injury, death or other undesirable conditions. It has been shown that the broad body of research on nerve excitation in humans also applies to nerve excitation in animals. Both sensation and muscle reactions can be elicited with electric currents conducted through the skin... These effects occur when nerves (or neurons) are excited – sensory neurons in the case of sensation, or motor neurons in the case of muscle reactions. Sensory effects are usually elicited with lower stimuli than are motor effects.*

2.2.2. Behavioral Responses to voltage exposure

Studies have shown that each animal will have a threshold of current exposure for a particular contact pathway. Levels of current exposure just above the threshold will result in mild behavioral reactions, such as the blink of an eye, which tend to become less pronounced over time as animals become accustomed to the sensation. As current exposure is increased above this threshold, behavioral responses become more pronounced and more persistent, indicative of annoyance, pain or involuntary muscle contraction (twitches).

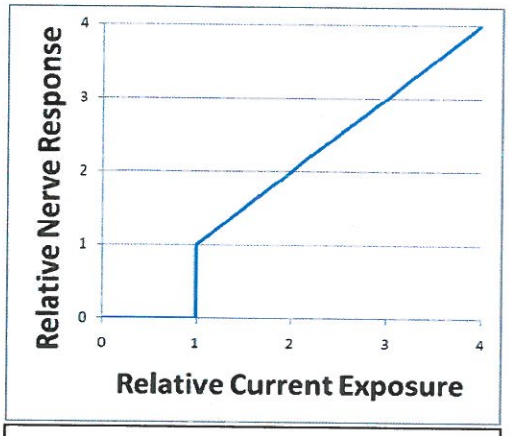

Figure 3. Example of threshold response. Below the threshold there is no nervous response. Response begins at the threshold value (in this example, one arbitrary 'unit' of current) and the intensity of response increases as the current level is increased further.

Stray voltage studies have used a variety of animal responses to characterize these threshold phenomena. Some studies have tried to use the most sensitive behavioral indicators of perception as a threshold of response (Norell, 1983; Reinemann, 1995, 1999; Rigalma, 2007). Researchers have noted that these very sensitive thresholds show high variability because cows rapidly acclimate to an unfamiliar sensation and cease to show any behavioral response.

Other studies have attempted to develop a more repeatable response in order to more accurately compare different types of stimuli (Aneshansley, 1997; Reinemann, 1999, 2003). These studies typically rely on involuntary muscle contraction, or stimuli with goes beyond subtle sensation to moderate annoyance as a threshold. Current applied in a periodic manner (e.g. a short burst of current repeated every 3 seconds for 1 minute) appear to produce more repeatable behavioral response thresholds than continuously applied stimuli (e.g. current applied continuously for 1 minute). This is probably because repeated stimuli produce a repeated series of 'startle' behaviors when each stimulus is applied whereas there may be only one such response at the start of continuous current exposure.

Further studies have used avoidance of water intake as a response threshold (Gorewit, 1989; Reinemann, 2004). Because of an animal's powerful drive to satisfy their water demand, this threshold is logically a higher value than those designed to detect moderate or pronounced (repeatable) behavioral changes. Studies have shown that animals are not deterred from drinking if only a mild sensation results from contact with a drinking device, while they are only temporarily deterred from drinking when a moderately annoying sensation results.

3. History of Stray voltage Studies and Evolution of Experimental Techniques

3.1. Methods Used In This Literature Review

This review of literature uses published studies that include data from controlled experiments and field studies. Controlled studies are designed to establish cause and affect relationships by careful administration of causal variables (voltage / current) and careful measurement of responses (behaviors, aversion, water or feed intake) while minimizing or controlling for external sources of variability and comparing responses to a control group. Field studies can be useful in establishing correlation but are generally not useful in establishing cause and effect relationships. If a cause and effect relationship exists they may be apparent in field studies if causal variables and responses are properly characterized and sufficient sample size has been obtained to account for the normal farm to farm and seasonal variation that occurs in the field.

Each study has been critically reviewed in regard to the number of subjects, experimental designs used, appropriate verification of electrical exposures and animal responses, statistical analysis methods and the degree of peer review. Studies of similar nature have been compared to assess repeatability of results. There have been a number of different ways that researchers have used to quantify voltage and current levels. The most common is to report the root-mean-square (rms) average of alternating voltage or current and will be used in this report unless otherwise noted.[6] Repeatability is a fundamental criterion for judging the weight of scientific evidence. Both applied voltage and the resulting current flowing through animals was reported where measured by and stated by the authors. Some studies did not report both of these measures, however, and the authors reported values are cited.

3.2. Early studies in New Zealand

The first reported studies of animal response to voltage exposure were published by researchers from New Zealand (Phillips, 1962; Woolford, 1972; Whittlestone, 1975). These studies were initiated by reports from dairy farms that people were experiencing mild shocks in milking parlors and speculation

---

[6] *Measurement Terminology: The most common way to refer to AC voltages and current is as a Root Mean Square (rms) average. The default statement of voltage and current in the literature is as the rms average of 60 Hz current (milli-Amperes or mA) and the rms average of 60 Hz voltage (volts or V). This is the meaning implied in this report unless otherwise noted. In some cases other measurements have been used, especially when dealing with transient voltage and current, short duration voltage or current pulses, or when current of voltage waveforms are not sinusoidal.*

Some studies have used the zero-to-peak (or just peak) current or voltage has been used as the defining exposure or dose level. The zero-to-peak voltage or current is the same as the rms average for square waveforms. The zero-to-peak current or voltage is 1.4 times the rms average (the rms average is 0.7 time the peak value) for sinusoidal waveforms. The peak voltage or current is 3 times the rms average for triangular waveforms.

In a few studies the peak-to-peak current or voltage has been used to describe the voltage exposure or current dose level. The peak-to-peak voltage or current is 2 times the rms average for an alternating square wave. The peak-to-peak current or voltage is 2.8 times the rms average for alternating sinusoidal waveforms. The peak voltage or current is 6 times the rms average for an alternating triangular waveform.

that cows might also be experiencing these same electrical shocks. An electrical survey of farms showed that contact voltages ranged from zero to as much as 20 V with most between 3 V and 10 V. The most important sources of voltage were: unbalanced loads (resulting in high neutral current) and the resistance of the neutral between the shed and transformer (secondary neutral voltage drop). A series of experiments were carried out to establish the lowest level of contact voltage, applied to the teat-to-rear hooves pathway, at which there was a response (Phillips, 1962). While certain cows were more susceptible than others it was concluded that 3 V would be a likely minimum level for response.

A subsequent study measured the current through animals (front to rear hooves and between a wetted flank and 4-hooves) in an attempt to reduce the variability of responses and found that changes in cow behavior were observed when currents reached 3 to 8 mA and these behaviors were judged to be uncomfortable for currents of 4.5 to 12 mA (Woolford, 1972).

A further study was done using a more objective method of measuring behavioral responses using an operant conditioning system in which cows turned on an electric current applied to the teats, the rump or the flank in order to receive crushed barley and turned off current by pressing a second manipulanda (Whittlestone, 1975). A step-wise increase in current in the range 0 to 10 mA showed that behaviors changed with currents of approximately 7 mA for one teat, 6 mA for the rump, and 4 mA for the chest area, and 6 mA for the udder.

This series of studies shows remarkable repeatability in the range of currents required to produce behavioral changes and aversion. Furthermore the relationship between voltage and current exposure indicate an effective animal + contact resistance in the range of 500 to 1000 Ohms. Similar experimental technique has been repeated by several research groups around the world over the past 45 years.

3.3. Early North American Studies

The first on-farm case studies in North America were reported in the early 1970's (Craine, 1970 in Washington State; Feistman, 1975 in Canada). These were assumed to be localized problems and did not receive wide attention. The first study published in North America of controlled animal exposure to voltage was by Craine (1975). Groups of 70 and 30 cows each were exposed to voltages ranging from 0 V (control treatment) to 8 V. Mild aversion was noted at 3 V while suppression of water intake was noted above 4 V. The 8 V treatment was discontinued after 1 day because many cows refused to drink. These response levels agree remarkably well with the New Zealand studies with corresponding real-world cow + contact resistances of about 1000 Ohms.

Field studies and observations began to appear with greater frequency in the US, Canadian and European literature in the 1980's (Gustafson, 1980; Sanders, 1981; Erikson, 1984; Kirk, 1984; Rodenburg, 1984; Thornton, 1884; Winter, 1984). This heightened awareness resulted in the initiation of research programs by groups at the US Department of Agriculture, Agriculture Canada, the University of Minnesota and Cornell University . These research programs were undertaken to better understand the relationship between voltage exposures and current dose for a variety of exposure pathways, the variety of behavioral responses, and physiological responses such as blood chemistry, stress hormones, occurrence of mastitis, milk production and milk composition. These studies were primarily done using steady 60 Hz AC voltages and currents.

3.4. United States Department of Agriculture Research

Lefcourt (1982a) used EKG patches applied to shaved areas on the front and rear legs to eliminate the problem of contact resistance on five cows exposed to an ascending current series of voltage from 0.25 V to 5 V. The cow body resistance varied from 250 to 405 Ohms using this pathway. Four cows showed a mild response to a current of about 3 mA while one cow showed a mild responded to a current of 0.7 mA, although this may have been due to a cut in the skin during shaving. In a second study Lefcourt (1982b) Subjected 6 cows to 5 mA of current for 20 minutes (continuous) and one for 5 of every 30 seconds (intermittent) both starting 10 minutes prior to milking and continuing through the milking session. Milk yield and milking time decreased in cows subjected to stimulation by intermittent current. Neither treatment appeared to have an effect on norepinephrine. The continuous 5 mA treatment had a variable effect on milk yield, milking time and hormonal responses, some cows seemed to adapt and some cows were reported to have enjoyed the stimulation.

Lefcourt (1985) later subjected seven cows to 3.6 mA and six cows to 6.0 mA intermittently at a.m. and p.m. milkings for 7 days. One cow had to be removed from the 6.0 mA group because of severe behavioral responses. In this study milk yield, milking time, and Wisconsin Mastitis Test scores were not affected, the maximum rate of milk flow increased slightly and the number of behavioral events increased with a greater increase in the 6.0 mA group. Heart rate was elevated (+3 beats/min) only in response to shock during preparation (initial shock). Time to peak oxytocin response was delayed in the 3.6 mA group, and peak prolactin and area under prolactin response curves increased similarly for both groups during shock. The author concluded that any negative effects of electrical shock on milk production or mammary health most likely are not related directly to shock (physiological responses to shock were minimal and milk yield was maintained). They noted, however, the severe behavioral responses to this level of shock would almost assuredly result in management problems.

In a final experiment, Lefcourt (1986,) exposed seven lactating cows to 60 Hz currents of 0, 2.5, 5.0, 7.5, 10, then 12.5 mA, biweekly for 10 seconds. As the current dose increased, cows became more agitated and two cows were not shocked at 12.5 mA due to severe behavioral responses. Heart rate immediately after shock increased at 10 mA and 12.5 mA treatments while prolactin, norepinephrine and glucocorticoids were unaffected. Epinephrine doubled in two exceptional cows at 10 mA. Dramatic behavioral responses displayed by cows at the higher current exposures were not correlated with significant or prolonged physiological responses and electrical exposure was not considered a reliable way to induce 'stress' in cows.

3.5. The University of Minnesota

A team of researchers at the University of Minnesota (Gustafson, 1983) measured the electrical resistance of milking machine components and found milk hose resistances ranging from about 30,000 Ohms to 80,000 Ohms depending on the milk flow rate. The minimum resistance from the claw through the cow to the floor was 3,000 Ohms. It was estimated that 25 V to 50 V across the milking machine/floor pathway would be required to obtain perception level currents through a cow.

Norell (1983) measured electrical resistance for eight pathways through dairy cows. Significant variation in resistance was found for different pathways as well as for different cows. The mean path resistances

ranged from 359 ohms for a mouth-all hooves pathway to 738 ohms for a front-rear hooves pathway. Three experiments assessing animal sensitivity to current based on behavioral indicators were performed. No suppression of a learned response to obtain food was found up to 6.0 mA front-rear hooves shock. However, muzzle-all-hooves shock as low as 1.0 mA suppressed plate pressing behavior. A learned escape response to a front-rear hooves shock above a normal activity level occurred between 2.0 and 3.0 mA. It should be noted that these exposure conditions were not typical of farm exposures.

Appleman and Gustafson published an article in 1985 in which they stated that, based on research done to that point, less than 10% of cows are thought to perceive contact voltages below 0.35 V, behavioral modification may occur above 0.7 V and endocrine response above 3 V or 8 mA (60 Hz rms). They estimated the resistance of different cow body pathways to range from 350 to 1700 ohms. A subsequent publication by these same authors (Cloud, 1987) contains revised recommendations based on additional research. They note that the milking machine is not a likely pathway for electrical currents to the cow because of its high resistance. The failure of controlled research to find a direct physiological effect in animals subjected to stray voltages, and the absence of documented case studies demonstrating a marked improvement in these traits upon correction of an existing problem lead them to the conclusion that there was no direct and causal relationship between voltage exposures and milking performance and animal health. They state that problems may occur when voltages accessing dairy cows through the mouth-all hooves pathway exceed 1 V and that below 0.7 V problems would be minimal. On the issue of cow+contact resistance they state that because the resistance of the front-rear hooves pathway is approximately twice that of the mouth-all hooves pathway, it requires a 2 V step potential shock to produce the same response as a 1 V mouth-all hooves shock and they recommend continued monitoring when measured voltages reach the 0.5 V level. These authors were also part of the consensus opinion later issued in the 1991 UDSA handbook recommending that voltage levels be kept below 2 to 4 V to avoid problems on farms.

3.6. Cornell University

A group of researchers at Cornell University reported on their first study in which cows exhibit behavioral response between 2 and 4 mA, while current applications up to 8 mA applied between the udder and four hooves did not affect milk production or milk composition and hormone responses were minimal (Gorewit, 1984).

In a 1985 study (Gorewit, 1985) eight pregnant Holstein-Friesian cows in weeks 16-20 of lactation were exposed to a current dose of 4 mA in the following manner. A 96-hour experimental period was divided into 4 sub-periods of 24 hours each during which cows on treatment were given shocks of 4 mA at 30 second intervals during 5 min in every 4 hours, via sub-dermal electrodes on the spine. The treatment and control cows were alternated in consecutive periods. Milk yield was slightly but not significantly decreased by the shock treatment (down 0.16 kg/milking), but milk composition, and feed and water intake were not affected. Milk somatic cell count (SCC) [7] tended to increase during treatment, but the

[7] *Somatic cell count (SCC) is one of indicators of the quality of milk. Somatic cells are leucocytes (white blood cells). The number of somatic cells increases in response to pathogenic bacteria.*

increase was not significant. Behavioral responses were greatest on first exposure, but cows became accustomed to shocks within 24 hours.

Three experiments were conducted using water bowl exposures. In one experiment a total of 30 cows were divided into five treatment groups of six cows each. Treatments of 0 V, 0.5 V, 1.0 V, 2 V, and 4 V were applied between metallic water bowls and a metal floor plate for a period of 21 days (Aneshansley et al. 1987; Gorewit et al 1987; Gorewit et a1. 1988; Gorewit et al. 1989). Two of the six cows in the 4 V treatment group did not drink for 36 hours and were removed from the experiment and replaced with other cows. All other cows drank normal amounts of water within two days of the initiation of the 21-day exposure periods and there was no significant difference in water and feed intake, milk yield and quality over the 21 days for any treatment group. Cows in the 1 V, 2 V and 4 V treatment group did show an increasing delay from the time the voltage treatment was applied to the time that they drank their first gallon of water. This delay was not observed at the 0.5 V treatment level. The delay increased with increasing voltage for the 1 V, 2 V and 4 V treatment groups.

A second test involved 80 cows, 40 of which were first calf heifers (Gorewit, 1989). These cows were divided into four groups of 20 cows each and exposed to 3 V, 4 V, 5 V and 6 V for 48 hours. Two heifers in the 5 V treatment group and two heifers in the 6 V treatment group did not drink for 36 hours. They were removed from the study and replaced with other heifers (bringing the total to 84 cows). There was a similar dose response curve for voltage treatment level and the delay to drink the first gallon of water as observed in the previous study, with no changes in the total daily water intake for any treatment level.

Aneshansley (1988) applied the following five temporal patterns of voltages between water bowls and rear hooves:

Exposure Level	Time Pattern
5 V	6 hours on – 6 hours off
5 V	4 hours on – 4 hour off
5 V	2 hours on – 2 hours off
8 V	one second every 20 seconds for 50% of the time;
8 V	for one second randomly with a probability of occurring 1 time in 40 seconds or 2.5% of the time

Behavioral patterns showed no consistent pattern. There was no significant change in amount of water consumed for any of the treatments.

Milking exposures were investigated by Aneshansley (1990; 1992) and showed that first calf heifers kicked their milking machine at levels ranging from 5 mA to 12.5 mA, and second through fifth lactation kicked their milking machine off at currents ranging from 8 mA to 18 mA.

Cornell University scientists conducted a full lactation study that examined the effects of voltage at various levels over full lactations, approximately 12 months (Gorewit, 1992a, 1992b). Four groups of 10 Holstein cows each were exposed to 0 V, 1 V, 2 V, or 4 V between waterers and a metal grid throughout

an entire lactation. Cows could not drink without placing their front hooves on the metal grid. Although there were some behavioral changes on the first day of exposure, feed and water intakes were not affected by and of the voltage treatments. Milk yield for the full 305 day lactation showed no significant differences between groups exposed or unexposed to and of the voltage treatment levels. Somatic cell counts, milk fat and protein and reproductive performance showed no significant differences between groups exposed or unexposed to voltage. The Cornell group also examined the impedance of cows over a wide range of frequencies and found a similar relationship to humans with decreasing impedance at higher frequencies (Aneshansley, 1990).

3.7. University of Missouri

Currence (1990) examined response threshold of 24 cows and humans to 1, 10 and 100 cycles of 60 Hz sinusoidal alternating current. Current was applied from one front to one rear hoof for cows and through adjacent fingers immersed approximately 4 cm in two small beakers containing dilute salt water for humans. Significantly higher currents were required for the 1 cycle current duration than for 10 and 100 cycle durations to elicit the same response in cows and humans. The average mild behavioral response threshold for all cows was 3.6 mA rms for multiple cycle events and ranged from 2.2 mA for the most sensitive cow to 5.4 mA for the least sensitive cow. The average response for all cows was 5.5 mA for the single cycle stimuli (or about 20% higher than the multiple cycle stimuli). The average current levels for humans to first perceive the 100 cycle current was 0.37 mA with discomfort noted at 0.45 mA. Cows showed behavioral responses at 3.6 mA whereas humans noted perception at 0.37 mA and discomfort at 0.45 mA for the same signal applied to adjacent fingers. It thus took about 10 times more current to produce a similar response in cows than in people. This relationship is as would be expected because of the larger body mass of cows (about 10 times humans) and correspondingly reduced current density (the same total current is spread out over a larger amount of enervated tissue).

3.8. New Liskeard Study

A series of long-term exposures studies was conducted at New Liskeard College of Agricultural Technology from 1986 to 1990 (Gumprich 1992a and b). Cows were included in the study from 2 weeks post partum for 112 days. A switch back experimental design was used to determine the effects of the three different levels of voltage applied to the cows. The responses measured were: daily milk production, milking time, milk composition, water consumption, feed consumption, breeding and behavior.

The cows were exposed to a uniform voltage between the cow platform, water bowls, and all metal stabling components. To simulate on-farm conditions, a continuous low-level voltage was interrupted by two three-hour periods of higher levels at 5 am and 5 pm, to simulate higher loads during milking that occur on many dairy farms. The first treatment applied to 30 cows (level 1) was 1.0 V with a background voltage of 0.3 V. The second treatment applied to 30 cows (level 2) was 2.5 V with a background level of 0.75 V. The third treatment applied to 30 cows (level 3) was 5.0 V with a background voltage of 0.75 V.

At treatment level 1 (0.3 V and 1 V), cows receiving the voltage treatment had significantly higher milk fat percentage than cows in the control group (31.2 versus 30.6 kg/cow per day). No other response

variables showed a significant response. At treatment level 2 (0.75 V and 2.5 V), milking time was longer (8.5 versus 8.3 min) for the treatment group while no other response variable showed a significant response. At treatment level 3 (0.75 V and 5 V) there was a residual effect on milk production two periods after the treatment period. In addition, less water was consumed by the treatment group (97.6 versus 100 liters/cow per day). It was concluded that exposures up to 5.0 V in well managed tie-stall dairy operations were unlikely to cause observable changes in cow milk production or behavior.

3.9. Field Studies and Case Studies

There have been reports of a number of field and case studies in the literature. Many of these suffer from:

- Self selection bias: Farms are often enrolled because they have health or production problems that they believe may be related to electrical exposures rather than a random selection of farms. Farms that are experiencing problems are more likely to be implementing a number of measures to improve their performance.
- Small sample size: Some studies have enrolled only a few case studies or a small selection of farms that have installed a particular mitigation device. Valid correlations rely on a sufficient random sample to balance the enormous variability across farms, across regions and across time.
- Inadequate characterization of voltage exposures: In some cases, exposures have not been documented at all or have been characterized by neutral-to-earth voltages which have been shown to be poorly related to animal exposure levels.
- Inadequate measurement of animal response: In some studies, animal responses have been self reported by operators without validation of performance numbers.
- Lack of controls or appropriate points of comparison: Seasonal and year-to-year variations in animal performance as well as enormous farm-to-farm variability require careful and appropriate comparisons in order to establish which changes in the farm environment are related to which responses in performance.

Some notable field studies are summarized below.

Kirk (1984) reported on a field study in which stray voltage investigations were performed on 59 Michigan dairy farms. Levels exceeding 1 V alternating current were reported to have been found on 32 farms, although the exposure locations location and measurement methods were not specified. Information regarding somatic cell counts, prevalence of clinical mastitis, and response to corrective actions was collected at the time of the farm visit and from questionnaires sent to the farmers following farm visits. Statistical analysis indicated no significant relationship between the magnitude of stray voltage and milk production, or somatic cell counts. When on-farm, off-farm, and combination sources were consolidated into a single category and compared with no source of stray voltage (presumably less than the 1 V level?), animal behavior was found to be related to source of exposure, whereas the prevalence of mastitis and milk production decreases were not. On most of the farms where exposure levels were less than 1 V, the signs interpreted by the dairyman as being due to stray voltage could be explained by other factors. On farms where the milking machine was functioning properly and milking

technique was adequate and included post milking teat dipping, mastitis was rarely noted to be a serious problem even though voltage exposures exceeded 1 V. The authors concluded that these data supported the conclusion that exposures less than 1 V would not produce herd behavior, production or health problems and that there were many other causes for these symptoms. This study suffers from lack of appropriate exposure verification and lack of appropriate response verification (self reported).

Rodenburg (1984) reported on a survey of service entrance neutral to remote earth voltage measurements on 140 Ontario dairy farms. During a 24 hour monitoring period 80% of farms had peak voltages between the in excess of 1 V, 55% of farms in excess of 2 V and 28% of farms in excess of 3 V. The highest voltages were usually recorded during peak electrical load periods between 6 and 9 a.m. and 5 and 8 p.m. Cow contact voltage exceeded 0.5 V on 50% of farms, 1 V on 21% of farms and 2 V on 11% of farms. On 40% of the farms, cow contact voltages were very low in spite of the presence of voltage on the neutral because of poor electrical bonding of stabling. There was no report of the relationship between exposure levels and herd responses in this study but this study gives useful information on the occurrence of neutral to earth voltage on Ontario farms in the early 1980's.

Thornton (1984) reported on a survey of Alberta dairy farms with parlor milking systems and found that 11% had voltages over 1 V with faulty wiring as the most significant cause. There was no definite relationship between voltage levels and herd production. This study also provides an insight into the occurrence and sources of neutral to earth voltage levels on Canadian farms although it is unclear if appropriate cow-contact measurements were made.

Winter (1984) reported on a field survey of 40 farms that had installed a mitigation device called the Electronic Grounding Systems® or EGS. Initial exposure levels were not reported. There were self-reported changes in milk production, somatic cell count, frequency of mastitis, time required to milk, breeding efficiency and labor productivity. The authors noted that numerous other factors affect dairy herd performance and therefore may have influenced the results reported by the operators and that in some cases with good reductions in voltage there were no significant changes reported in herd performance. This study suffers from selection bias (only those farms purchasing a particular device included), lack of appropriate exposure verification, and lack of appropriate response verification (self reported).

Appleman (1987) reported on a statistical analysis of 84 Minnesota farms that had neutral isolators installed over the period of one year. Milk production 12 months after isolation was reported to be higher than prior to isolation and increasing more rapidly than regional averages. No other parameters studied showed significant change after isolation (average SCC, % of cows with high SCC, % of cows leaving the herd, heat detection, conception rate, calving interval). Initial exposure levels were not recorded, nor were exposure levels after isolation. This study suffers from possible selection bias (those farms that had neutral isolators installed may have been more likely to be experiencing problems and searching for solutions to these problems beyond isolation).

Albright (1991) reported on a study in which 30 Indiana dairy farms in 21 counties were checked for suspected stray voltage problems. Initial neutral-earth voltage levels at the service panel averaged 0.5 V. With all apparent electrical equipment turned on, the neutral-earth voltage levels averaged 1.1 V. Continuous monitoring on nine farms showed peak levels of 1.5 V. The installation of a Tingle voltage

Filter (TVF) on ten problem dairy farms was reported to have reduced neutral-earth voltage levels 11-fold. Major differences were found from farm to farm regarding dairy management abilities, as well as the state of electrical wiring and grounding. Nine of ten TVF herds were reported to have shown improvement in individual cow and group behavior although it was not clear how these behaviors were measured or reported or which specific behaviors improved. When comparing 12 months post installation to pre-TVF milk production data, herds were reported to show a slight increase in milk production, however, the time of year of intervention was not indicated and there did not appear to be a comparison with a 'control' group of farms. This study suffers from lack of appropriate exposure verification (only neutral-earth voltages, not cow-contact voltages measured). Many of the responses were not appropriately verified (either methods not described or self reported).

Hendrickson, (1991) conducted a field study in which cow contact voltage and current exposures were monitored 4 times/year on 110 randomly selected Wisconsin dairy farms. Dairy herd management practices were also analyzed and related to both production and voltage findings. Farms were grouped into low level and high level voltage exposure groups (greater than 0.5 V steady state or greater than 1.0 V spikes in cow contact locations = high level exposure) as well as low, middle and high milk production groups. Conclusions of this study included:

- *High level exposure was found on 34% of the survey farms on at least 1 of the quarterly checks.*
- *The high level exposure group included farms in all production groups (low, middle, and high) suggesting that rolling herd averages of greater than 18,000 lbs. can be achieved at this high exposure level.*
- *High level voltage was more common in the low and middle production groups than the high production group.*
- *The high production group displayed a significantly higher level of management intensity than the middle and low production groups suggesting that proven dairy herd management factors is key to achieving high levels of milk production regardless of the voltage exposure levels measured during the survey.*

This study had a reasonable sample size and farms were randomly selected. Exposure and response verification appear to be appropriate. The study cannot be used to establish cause and effect relationships but is a useful comparison to the types of responses observed in controlled studies.

3.10. USDA-ARS Handbook 696: Effects of electrical voltage/current on farm animals

USDA Handbook 696, issued in December 1991 is the result of a review of available research by 15 scientists. Most of the research relates to 60 Hz AC steady state voltage/current exposures. Figure 4 is reproduced from that publication and summarizes the researcher's conclusions regarding the levels of voltage and current that affect dairy cows.

The following specific conclusions are the consensus opinions of all contributors to the Handbook.

- Currents up to 4.0 mA do not appear to inhibit the milk ejection reflex, depress milk production significantly, or increase the incidence of mastitis or other diseases of the cow.
- It is doubtful that the milking machine plays a role in the exposure of cows to stray voltage. The voltage necessary to override the resistance of the milking path would be well in excess of neutral-to-earth voltages.
- Cows experience various health problems, including mastitis. Mastitis is a fact of life in the dairy industry, and it is caused by infection of the udder and not electricity.
- Factors such as milking machine problems, disease, poor sanitation, and nutritional disorders may cause cows to manifest any of the symptoms that are sometimes attributed to stray voltage/current exposure.
- While some pathway resistances approach 1000 ohms or more, worst-case resistance may be as low as 500 ohms.
- Cow contact voltages from low impedance sources should be kept less than 2 V to 4 V. (2 V corresponds to 4 mA, assuming 500 Ohm cow + contact resistance, 4V corresponds to 4 mA, assuming 1000 Ohm cow + contact resistance

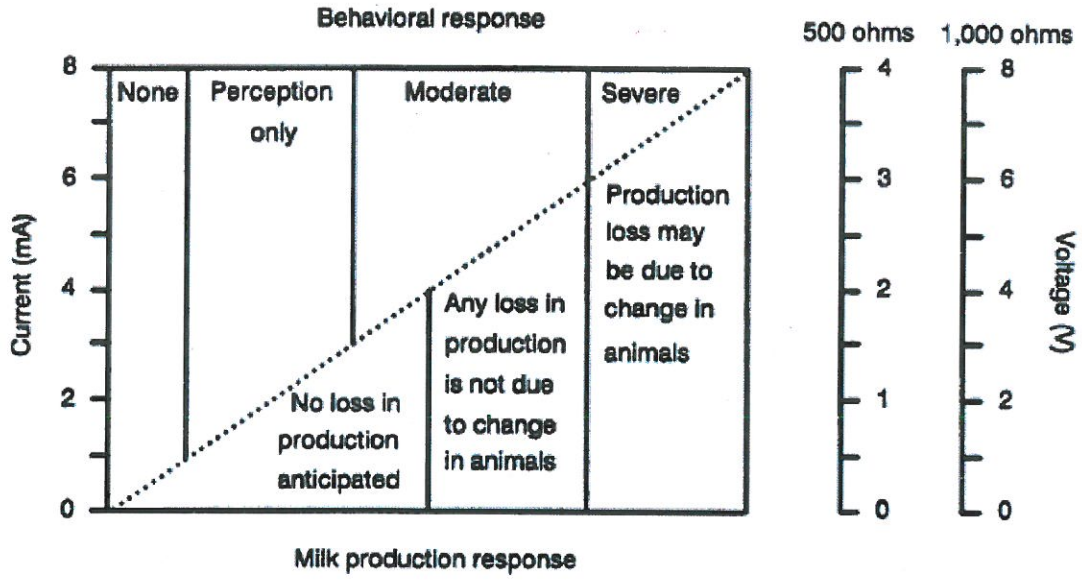

Figure 4. Behavioral and milk production responses to increasing current levels. The corresponding voltage scales on the right were estimated using a worst case circuit impedance (500 Ohms) and a more realistic impedance (1000 Ohms). (From USDA Handbook 696, Lefcourt 1991)

3.11. Studies after publication of USDA 696

In the 1990's the focus of research shifted to the effects of 'transient' 60 Hz voltage and currents and high frequency stimuli by research groups at Cornell University and the University of Wisconsin.

3.12. Cornell University II

A useful categorization of voltage/current exposures was developed based upon on-farm measurements (Aneshansley, 1997),

- Steady state 60 Hz AC voltages, greater than 1 second duration, typically 60 Hz power frequency. These steady state events can also have some harmonic content as well due to nonlinear loads.
- Momentary 60 Hz events of from 1 to 60 cycles of 60 Hz voltage/current, as occurs when a motor starts.
- Transients are events have a duration of less than 1 cycle of 60 Hz and are caused by arcing as switch contactors bounce, electric fence controllers which produce short duration pulses and other high frequency 'noise' produced by the operation of a variety of electrical devices.

A set of water bowl experiments were used to determine the current levels needed to cause a cow that was drinking, to stop drinking. These experiments examined the effect of different voltage waveforms and frequencies (Aneshansley, 1997; Aneshansley, 1999). All current levels for a response are given as the average of 16 cows with 4 replications of each treatment per cow. Events studied were

- steady state AC current from 60 to 30,000 Hz
    - higher frequencies required increased current to elicit response
- combinations of 60 and 180 Hz with different phase shifts (harmonics)
    - extreme waveform distortion can influence cow sensitivity
- short duration DC pulses
    - pulse duration less than 400 microseconds required higher current to elicit response
- DC offset combined 60 Hz current
    - DC offset had no effect on current sensitivity

The results of these studies agree well with neuro-electric theory (Reilly, 1998) and other experiments on high frequency exposures (Reinemann, 2005).

Holstein cows with a history of subclinical mastitis (cultured positive for *staphylococcus aureus*), were used to determine if seven day exposure to steady state voltages could trigger clinical mastitis (Gorewit, 1997). Cows were divided into four treatment groups of four cows each with constant voltage treatments of 0 V, 1 V, 2 V and 4 V applied continuously between water bowls and metal floor mats. Animals perceived voltages as evidenced by delays in drinking, which increased with voltage exposure

levels. Voltage exposure did not significantly influence milk production, milk composition, water intake, feed intake, blood chemistry, or blood serum concentrations of immune gamma globulins or cortisol. A trend existed for higher cortisol levels in those cows receiving voltage treatments, however. Milk production, somatic cell counts, milk fat and protein and IgM[8] levels were higher in the 0 V and 1V groups compared with the 2V and 4 V treatment groups. This was most likely caused by the subclinical *staph*. infections present in the cows at the start of experimentation.

In a second mastitis experiment 16 lactating Holstein cows (8 receiving Bovine somatotropin [bST] and 8 bST free cows) were divided in to four treatment groups of four cows each and exposed to 0 V, 1 V, 2 V or 4 V of 60 Hz rms constant voltages applied continuously between water bowls and metal floor mats for seven days (Gorewit, 1999). All cows were exposed to *streptococcus uberis*[9], as a post teat dip after milking. Voltage exposure did not significantly influence milk production, feed intake, water intake, SCC, milk fat or milk and protein. The authors concluded that steady state voltages of up to 4V, applied to water bowls, for 7days, did not promote clinical mastitis in dairy cattle predisposed to mastitis during or after direct exposure of live bacteria to teat ends.

3.13. University of Wisconsin

A research program at the University of Wisconsin was initiated at the request of the Wisconsin Department of Agriculture, Trade and Consumer Protection (WDATCP) in 1991. A citizen's advisory board to the WDATCP, composed of parties with concerns about stray voltage, established the priorities for this research. The highest priority at the time this research was initiated was dairy cow response to short duration or 'transient' voltages.

Experimental procedures were developed by an animal behavior specialist to measure and detect behavioral responses to applied current pulses. A number of suspected behaviors were monitored by human observers. Computer-based data acquisition equipment was also used to monitor animal activity. For studies in which current pulses were applied from muzzle to 4-hooves, facial activity was the most sensitive behavioral response followed by front hoof lifting. Human observers' measurements of hoof lifting agreed well with automated recording of animal motion. Tail motion showed no statistically significant response to the current stimulus (Reinemann, 1999b).

The distribution of responses at 60 Hz and higher frequencies showed remarkable agreement neuro-electric models and numerous other studies that used a variety of methods to detect behavioral response thresholds (Reinemann 1999b). The range of sensitivity to a single-cycle, 60-Hz, current pulse for 120 cows ranged from 2.8 to 19 mA (measured from zero to peak) with a median response threshold of 9.6 mA. Cows were less sensitive (e.g., more current was required to elicit a response) to shorter duration or higher frequency waveforms over the frequency range from 60-Hz to 50,000 Hz. The median sensitivity for a single-cycle, 50-kHz pulse increased to 1308 mA (measured from zero to peak). The waveform and number of cycles of the stimulus for high frequency pulses also affected sensitivity. Cows did not respond to magnetic fields of up to 4 Gauss produced by current flow in metal structures

[8] *IgM or Immunoglobulin M, is by far the physically largest antibody in the human circulatory system. IgM antibodies in serum indicates recent infection*

[9] A highly contagious mastitis pathogen.

(Reinemann, 1995a). The maximum magnetic field exposure used in this study (4 Gauss) is extreme and hundreds of times higher than any conceivable farm exposure.

A series of experiments was performed to examine the sensitivity of dairy cattle to current pulses with multiple frequency components, specifically shorter duration pulses superimposed on a 60 Hz waveform (Reinemann, 2003b). Involuntary muscle contraction thresholds were determined for cows using the muzzle-hooves exposure pathway. There was no significant interaction between the longer duration component (1 cycle of 60 Hz current or a phase duration 1/120 of a second or 8.3 ms) and the shorter duration components (pulses with durations of 1.8 ms , 1.4 ms and 0.7 ms). The authors concluded that peak-to-peak and zero-to-peak measurements of current with multiple frequency components may over-estimate the sensitivity of dairy cattle to current pulses.

Further studies were conducted to determine the level of current, relative to the behavioral reaction threshold, required to affect cows' feed and water intake and milk production. Groups of eight cows were monitored for a 14-day pretreatment period followed by a 21-day treatment during which a single-cycle, 60-Hz transient current was applied to water bowls once every second, and a 14-day post treatment period (Reinemann, 2005). Cows in these experiments were exposed to the transient current whenever they attempted to drink. In practice, transient events are not typically present every time an animal attempts to eat or drink. Exposure levels were set relative to the sensitivity of individual animals to short duration exposure to take into account the wide range of sensitivities among cows. The exposure levels ranged from 7 mA to 20 mA (measured from zero to peak). Feed and water intake, milk production, somatic cell count, blood composition, and activity level were monitored during the experiment. Average changes in feed and water intake and milk production during the 21 day treatment period were not significant when compared with the 14-day pre-treatment period. No change in SCC was found for the animals at the highest exposure level. Animals showed an acclimation to the transient current exposure with avoidance behaviors most prominent immediately after exposure and reduced avoidance response with increasing exposure time.

Significant reductions in water and feed intake, and milk production were measured on the first three days of exposure for cows exposed to 150% of their reaction threshold current level. The current level required to elicit this short term reduction in water and feed intake and milk production was thus considerably higher than that to produce a behavioral response. Behavioral effects, as indicated by delay to drink and gross observation, were apparent during the first day of exposure at levels lower than those required to cause measurable changes in daily total water and feed intake or milk production. On average, an increase in the reaction threshold (cows became less sensitive) was observed between pre-treatment and post-treatment periods. This confirms results of previous studies and field observations noting rapid acclimation to voltages as well as changes in animal behaviors with no measurable decline in water or feed intake or milk production.

Short-term aversion to water was also observed in a second study when a single-cycle 6000 Hz current pulse (ranging from 60 to 150 mA zero-peak current) was applied to the water bowl (Reinemann, 1996). Reduced water consumption was again observed for current exposure levels 150% of the behavioral response threshold. Predictability of aversive response was improved over previous studies by taking into account individual animal sensitivity. This result clarifies previous experiments in which animals had

to be removed from experimental trials because of dramatic response. More consistency in behaviors was observed, and greater response was obtained when using a multiplicative current exposure scheme (150% of behavioral response threshold), than with an additive scheme (1.5 mA or 3 mA + behavioral response threshold). The responses were all explainable by avoidance of water bowls associated with the presence of an annoying stimulus rather than direct physiological effects.

A subsequent study investigated aversive response of a continuously-applied stimulus to intermittently-applied stimulus (Reinemann, 2004). A continuously applied current pulse at 150% of each cow's behavioral response threshold resulted in reduced the water consumption, while the intermittently applied pulse at the same current level did not result in reduced water intake. In order for current exposure to affect cows, the applied current must first be of sufficient level to cause avoidance behavior. In addition, these events must also occur often enough to cause animals to avoid water and/or feed.

The relationship between cow impedance and cow sensitivity was also examined in these studies. There was a trend for more sensitive cows to have higher resistance. Thus using the minimum threshold current for the population of cows combined with the minimum impedance from that same population will result in an overly conservative estimation of the minimum threshold contact voltage for that population. Measurement of cow contact voltage and current using a 500-Ohm shunt resistor have been shown in these laboratory studies as well as field studies to be a conservative estimate (worst case) of the current likely to flow though a cow.

There was no evidence from these studies that there was any direct physiological effect of voltage and current exposures below the levels at which a behavioral response could be documented nor at levels at which aversion to water and/or feed are first observed. The short term decreases in water and feed intake that was documented were consistent with aversive response to an unpleasant stimulus.

3.14. AgroParisTech

The most recent series of studies to examine the effects of stray voltage on farm animals was begun at the French Agricultural University, AgroParisTech, in 2005. Roussel (2007) determine the threshold level at which heifers perceive the electric shock, using an avoidance test. Twenty Holstein heifers were exposed in steps of 0.3 V up to 5 V applied to a feeding cup. Twenty additional heifers followed the same avoidance test but without any electricity applied. For exposures of 2.3 V or greater, the percentage of total feed eaten from the electrified feeder and the time spent eating in the electrified feeder decreased. Above 3 V heifers changed more quickly to the non-electrified feeder. Above 2 V heifers performed more muzzle-grooming and head shaking than the control group. The authors concluded that a voltage of 2.3V appeared to be the threshold at which avoidance behavior starts. Further research is underway study whether individual electrical resistance may explain some of the variability in the voltage threshold.

Rigalma (2007) reported on a 3-week period of 3.3 V exposures at metallic feeders in either a continuous or unpredictable manner with twenty electricity-naïve heifers or twenty heifers that had experienced voltage exposure previously. Heifers with unpredictable exposure tended to spend more time eating in the electrified feeder, made more abrupt head movements and more muzzle-grooming

behaviors than those in the continuous exposure group. Although no behavioral differences were observed between naïve and experienced heifers, the naïve heifers had higher cortisol concentrations on the first day when the voltage was applied. Naïve heifers with continuous exposure ate more and changed feeder quicker than the naïve heifers in the unpredictable exposure group. They concluded that heifers with unpredictable exposure had more difficulty in adapting and that past-experience seemed to reduce the response. Preliminary results (to be presented by Rigalma in 2008) suggest that unpredictable exposure may not offer sufficient time to the heifers to learn how to adapt.

A study has been initiated to examine behavioral and endocrine responses for a large sample size of lactating cows (about 100) in a free-stall barn environment. Studies have also just begun at Limoges University to remotely measure current flowing through cows in their normal farm environment. The results of these studies will be a valuable contribution to better understand the level and time patterns of current exposures in real-world farm conditions. Work is also being conducted on mitigation methods (personal communication with researchers at stray voltage conference in Limoges, France, November 2007).

3.15. Minnesota Science Advisors Study

In 1994 the Minnesota Legislature authorized the Minnesota Public Utilities Commission (MPUC) to establish a committee of science advisors in response to claims by The Electromagnetic Research Foundation (TERF) that electric currents in the earth from electric utility distribution systems are somehow responsible for problems with animal behavior, health and production problems of dairy cows. The Science Advisors were a multidisciplinary group with expertise in the fields of agricultural engineering, animal physiology, biochemistry, electrical engineering, electrochemistry, epidemiology, physics, soil science and veterinary science. These science advisors were assigned the following tasks:

- Review any evidence that might support the proposal that earth currents adversely affect dairy herd health and production.
- Determine whether further research in this area is warranted.
- Oversee any research proposed to resolve questions related to possible earth current effects.
- Provide recommendations to the PUC based on available evidence and the results of any research conducted with funds appropriated under the legislation.

A progress report was issued in January 1996 in which it was noted then that currents in the earth can only interact with dairy cows through their associated electric fields, magnetic fields and voltages, and that these parameters should be the focus of analysis, rather that earth currents per se. A survey of Minnesota and Wisconsin dairy operators was designed to obtain information on the specific types of herd health and production problems and to assess the extent to which owners of dairy herds attribute such problems to stray voltage or other causes. A field study was conducted to assess possible associations between selected electrical and non-electrical parameters and the presence or absence of persistent problems associated with dairy cow health and milk production. The MPUC also funded follow-up laboratory research at the University of Wisconsin.

Based on their study and analysis the science advisors reached the following conclusions (MPUC, 1998):

1. *"We have not found credible scientific evidence to verify the specific claim that currents in the earth or associated electrical parameters such as voltages, magnetic fields and electric fields, are causes of poor health and milk production in dairy herds."*

2. *"At the present time, there is no basis for altering the PUC-approved standards by which electric utilities distribute power onto or in the vicinity of individual dairy farms."*

3. *"There are many well-documented non-electrical factors that are known and accepted by the scientific community, and by most farmers as well, to cause dairy cow health and production problems. Among the most noteworthy stressors are poor nutrition, poor cow comfort and hygiene, and low or no use of vaccinations and related preventive veterinary practices. Those who want to improve performance of dairy herds should always address these factors."*

Other Notable conclusions were:

> *"It is important to note here that there is a difference between what is conceivable or possible and what is likely or probable. For example, a National Institute of Environmental Health and Safety committee concluded that there is a possible not a probable association between the presence of 60 Hz magnetic fields of 2-3 milliGauss or higher and childhood leukemia. In the 19-farm field study described in this report, the average AC magnetic fields measured inside the dairy barns were on the order of 0.5 milliGauss. Thus with the present body of evidence, it is our best judgment that magnetic fields from earth currents or any other contributory sources in the dairy barn are not of sufficient levels to cause any health or production problems in dairy cows."*
>
> *"At the present time, there is only one electrical condition that is well documented in the peer reviewed, published literature to influence adversely cow behavior, health or milk production under specific circumstances. That is cow contact stray voltage."*

While each of the Science Advisors accepted the final report and recommendations, one of the science advisors published a paper with his personal follow-up analysis of the Science Advisors Report (Polk, 2001). Some of the conclusions from this paper were:

- *At present it is not known whether and how the long-term exposure to step voltages above 9 mV can affect health and/or milk production of dairy cows. This can only be established by laboratory experiments where major variables known to affect animal health can be controlled.*

- *It appears desirable to measure soil resistivity when a dairy farmer reports possible electricity related cow health and production problems*

- *The author alone is responsible for the analysis presented here and the conclusions drawn.*

The analysis in this paper consists of a series of more than twenty T-tests was done on a limited data set. Statistical theory indicates that if a p value of 0.5 is used as a test of significance, one of 20 tests would show significance due to chance correlation. The correlation between Milk/per/cow/day and

voltage exposure during low use hours was claimed to be significant (p=0.0418) but is highly influenced by one outlier in the rather small data set and when this outlier is removed the correlation is not significant. The correlation is in the best case extremely weak, and in the reasonable case is nonexistent. Many other differences in management factors were more significant than voltage exposure during the low voltage period. Dr. Polk's paper does not refute any of the original science advisors conclusions and there is insufficient evidence in the 2001 analysis to challenge the original conclusions of the Science Advisors Report, of which he was an author. Another Science Advisor published a statement (Stetson, 2003) in which he indicated that Polk (2001) apparently used a limited selection of data from the Science Advisor Report and misinterpreted the data from the farms with the stall mats. Dr. Polk died in 2000 so he is not able to defend his published comments.

3.16. University of Wisconsin II

Controlled laboratory studies at the University of Wisconsin were commissioned by the MPUC to investigate a hypothesis developed by the Science Advisors. In these studies stress hormones and immune function response of dairy cows exposed to low-level step potentials were examined. A first series of experiments was performed to measure behavioral responses and changes in blood cortisol concentration of cows exposed to 60-Hz electrical current applied from front to rear hooves (Reinemann, 2003c). Cortisol levels did not increase in response to short-term current exposure at levels up to 150% of the behavioral reaction threshold. Cortisol concentrations were found, however, to increase in response to hoof trimming. These results confirm several previous studies indicating that behavioral changes are a more sensitive indicator of response to short-term electrical current exposure than blood cortisol levels.

Milking performance of cows subjected to electrical current during milking and two common milking machine problems were documented (Reinemann, 2003a). The first experiment used 32 cows in a 2x2 factorial design with exposure to 1 mA (60-Hz rms) of electrical current from front to back hooves during milking and a pulsation failure (no massage phase) as treatments. A second experiment used 16 cows in a 2x2 factorial design with exposure to 1 mA (60-Hz rms) of electrical current from front to back hooves during milking and excessively aged milking machine liners as treatments. The main effect of current exposure was not statistically significant for milk yield, average milk flow rate, maximum milk flow rate, cow activity, and strip yield. The main effect of pulsation failure was significant for cow activity (5.8 fewer weight shifts during a milking). The main effect of aged liners was significant for milk yield (2.2 kg increase), average flow rate (0.3 kg/min reduction), maximum flow rate (1.2 kg/min reduction), and liner slips (26 more per milking). The significance of some interactive effects appeared to indicate that current exposure had a mitigating effect on the changes caused by the milking machine problems. These interactions were not consistent across experiments, however, and in some cases were highly influenced by a few observations. This study adds further evidence to the body of literature showing that exposure to low-level step potential resulting in less than 1 mA rms of 60-Hz electrical current during milking is not a cause of cow discomfort or poor milking performance.

A third series of experiments were performed in which twelve mid-lactation dairy cattle were subjected to intermittent 60 Hz electrical currents of 1 mA rms from front to rear of stall for a period of 14 days (Reinemann, 1999a). An additional 12 cows were housed in identical stalls with no treatment. Electrical

monitoring indicated that achieved current was within 10% of target. Feed intake, water intake, milk production and rectal temperature were monitored daily and were unaffected by treatment. Behavioral measurements, including percentage of time lying and time to re-enter stalls after milking, were unaffected by treatment. Immune function was assessed by analyzing blood samples taken twice a week for thirteen different response variables. There was no statistically significant difference between control and treatment cows for any of the main response variables. The difference between the control and treatment cows was statistically significant for one of the secondary response variables but did not appear to be consistent with other observations. Collectively, these results suggest that exposure to 1 mA of current for two weeks had no significant effect on the immune function of dairy cattle.

3.17. Recent Dairy Field Studies.

Southwick (1992) reported on a dairy farm located in central New York State that was visited following complaints of electrical shock in the farmhouse shower and the milk house sink. As much as 2 V AC of potential difference was measured between the waterline and the cow platform (cow-contact voltage) and attributed mainly to a utility source. The farm's electrical service was modified so that the farmstead could be connected or disconnected from the primary neutral wire at 2-week intervals for 12 weeks. When connected to the primary neutral wire, voltage between waterline and floor ranged between 0 and 1.8 V. When disconnected from primary neutral wire, voltage between waterline and floor was less than 0.1 V. There was no difference in mean milk production, bulk tank milk somatic cell count, or water consumption among periods when cows were exposed or unexposed to voltage. Although not statistically significant the values for somatic cell count were lower and water consumption was higher when cows were exposed to voltage than when they were not. This field study is notable in that the exposures and responses were appropriately verified and a switchback design was used to avoid confounding with time (to reduce the influence of the many other factors that can affect dairy cow health and production).

Reines (1998) presented data from more than 2900 stray voltage investigations performed in Wisconsin. The data collected includes electrical characteristics of both the distribution and on-farm wiring systems as well as rolling herd average milk production and bulk tank average somatic cell counts. More than 85% of the first investigations reported maximum primary and secondary neutral-to-earth voltages less than 2 V. More than 90% of investigations reported maximum cow contact voltages less than 1 V. The correlation between electrical parameters was as expected from electrical theory. However, specific measurement of each parameter is required because predictive ability is low. Indicators such as ground per mile, primary neutral or secondary neutral-to-earth voltages are not good predictors of cow contact voltage. This is probably due to the prevalence of on farm sources, which can either add or subtract from primary sources. It is imperative to properly identify the voltage sources and their interaction before implementing mitigation. There was no meaningful correlation between primary neutral-to-earth voltage, secondary neutral-to-earth voltage, cow contact voltage, or ground rod current and either rolling herd average milk production or somatic cell count ($r < 0.02$). The correlation between the monthly average somatic cell count reported by stray voltage investigators and by the USDA for all farms in the Midwest ($r = 0.58$) was an order of magnitude higher than for any electrical parameter.

Inappropriate conclusions about changes in somatic cell count and milk production can be drawn if these seasonal trends are not taken into account.

The Public Service Commission of Wisconsin has continued to collect data from stray voltage investigations. The most recent report (PSCW, 2007) presents charts and statistics form 8388 farm investigations. Only about 7% of these farms had cow contact voltage in excess of the PSCW level of concern of 1 V measured across a 500 Ohm resistor. Both cow contact current and primary neutral-to-earth voltages have decreased substantially since the early 1990's as the result of efforts by the PSWC and electric power suppliers. These data show no meaningful correlation between:

- current return ratio and elevated somatic cell count
- current return ratio and rolling herd average milk production levels
- cow contact current level and somatic cell count
- cow contact current level and rolling herd average milk production

This lack of correlation is consistent with experimental studies which indicate no expected cause and effect relationship between herd health and production at exposure levels below 1 V at animal contact locations. This continuing field survey is notable in its very large sample size. If voltage and/or current exposures did have a causal influence on dairy cow animal health and production, it should be apparent in this large sample. Because the vast majority of farms (93%) are below the 1 V (2 mA) level of concern, it is not surprising that there is no apparent trend in milk production or somatic cell count with increasing voltage exposure. This data set presents strong evidence of the lack of a dose/response relationship from extremely low exposures up to 1 V (2mA) exposures, confirming results from controlled studies indicating that dairy cow responses would not occur at these low exposure levels.

3.18. Other Species

The vast majority of stray voltage studies have been performed on dairy cows; however there are also a number of studies that have been performed on other species that have been summarized below.

3.18.1. Swine[10]

Gustafson (1986) reported that eight growing/finishing pigs exposed to 60 Hz electrical currents administered through a mouth-to-all-hooves showed a preference for a water source with no current

[10] *The studies reported here are published works in which sheep were exposed to voltage and current levels typical of stray or tingle voltage. There have been other studies on swine with extremely high level of current exposure: Ziecik (1993) foot-shocks increased cortisol concentration in blood during the first hours of stimulation but at the end of treatment cortisol was even lower than in control animals. Sein (1994) transcranial electro-stimulation during 3 days shortened the pubescence period and increased the quantity of ovulated follicles in swine.*

compared to those at 0.25 mA and above. However, when no alternative source existed, greater than 3.0 mA was needed to affect drinking time and 4.0 mA to affect consumption.

Robert (1991) examined the effects stray voltage on 72 growing/finishing pigs by applying treatments of 0, 2 V or 5 V between the feeder or drinker and the metallic floor. During daytime, the applied potential difference of 5 V decreased the eating frequency in both feeding groups and the drinking frequency in restricted-fed pigs. Daily feed intake and average daily gain were lower in the 5 V group than in the 2 V and the control groups from 17 to 21 weeks of age. Gastric lesions, hematological and biochemical variables were not affected by either voltage level.

Matte (1992) measured the total body impedance (TBI) of 12 pigs between the ages of 9 and 22 weeks exposed to 2 V or 5 V of 60 Hz AC and flooring conditions of woven wire covered with water (WW) or dry (WD). TBI was higher at 2 V (1300 Ohms) than at 5 V (1091 Ohms) while the effect of age on TBI also depended on the age of pig and the wetness of the floor with values ranging from 3041 Ohms (WD) to 1031 Ohms (WW) at 10 weeks of age to 1036 Ohms (WD) to 778 (WW) at 18 weeks of age. The reduction in TBI with age could be explained by the increase of the contact area and of the pressure exerted by hooves on the floor, which are major factors influencing the quality of floor-hooves contact. In a second trial, TBI was measured for two 15 week-old pigs with 1 V and 2 V of current at frequencies of 60 Hz, 1000 Hz, 3000 Hz and 10,000 Hz on flooring surfaces WW, WD, and a copper plate covered with water (CW). No difference in TBI was found between the 1 V and the 2 V treatments while TBI at 60 Hz on CW was lower than on WD but similar to that measured on WW. As current frequency increased, the differences among surfaces disappeared. These results indicate that a greater amount of current could pass through the body of growing-finishing pigs as they get older and/or heavier. Among the studied factors affecting TBI, wetness of the floor and current frequency appeared to be the most important.

Robert (1992) evaluated the effects of 0 V, 5 V or 8 V applied between feeder or drinker and the metallic floor on 72 growing-finishing pigs. The total drinking time and the number of drinking bouts were lower in the 8 V group than in the 0 V group. The percentage of time spent drinking during light hours was reduced in the 5 V and 8 V groups at 18 and 20 wk. However, it was only between 14 and 16 weeks of age that water intake was lower in the voltage groups. There was no effect of voltage on mean daily feed intake and average daily gain over the whole fattening period. Behaviors were modified in the 8 V and 5 V groups while the metabolic profile, the frequency and the severity of gastric ulcerative lesions and the meat color were similar among the treatments.

Goodcharles (1993) subjected 72 pigs to 0 V plus 2 V pulses, 2 V plus 3 V pulses, 5 V plus 8 V applied between feeder or drinker and metal floor and a control with no voltage. Pulses were of 3 second duration. No major impact voltage exposure on health, growth or welfare of fattening pigs was observed. Some behavior changes were noted, however.

Kambic (1993) evaluated the effects of electrical stimulation on the mechanical properties of healing skin of 20 Hanford mini-pigs. Wounds were stimulated 2 hours per day, 5 days per week for 30 days. The

stiffness values for skin samples oriented parallel to the current flow were reduced by nearly half the values obtained for normal controls (a desirable condition). No adverse effects were reported.

Robert (1994) conducted an experiment to determine the current through pigs housed on different types of floor (woven wire, concrete, molded plastic, or plastic-coated metal) and under different flooring conditions (dry or wetted with urine). Current flow was higher in wet than in dry conditions and increased with age on the 4 floor types, as did the hoof contact area with floor and hoof pressure of pigs. In dry conditions, there was no measurable current flow on the 2 plastic floors. On all floor types, except dry plastic, the current flow increased with frequency of current, the highest values being on the woven wire floor. These data show how the contact impedance between the floor and the hooves varies as a function of floor conditions and can influence the amount of current through young and adult pigs.

Heyde (1995) measured galvanic DC voltages of 400 mV to 600 mV between the floor and farrowing crates, water bowls, and feed troughs. No link between voltage, behavior, and production was reported.

Kennedy (1995) measured heart rate and behaviors of gilts released into a field surrounded by an electric fence for the first time. Most contacts with the fence occurred in the first 10 minutes of the first day after which the pigs avoided the fence. The magnitude of the heart rate response did not diminish with subsequent shocks but increased with increasing gestation. The authors suggest that contact with an electric fence for the first time during pregnancy could contribute to reproductive upset.

Robert (1996) randomly assigned 120 gilts to three voltage treatments; 2 V steady with 5 V pulses, 5 V steady with 8 V pulses, and a control treatment. The steady voltage was applied 24 h/day while pulses of 3 sec duration were applied at irregular intervals. Gilts showed some behavioral response to voltage while the behavior of sows and suckling pigs was not affected. Water and feed intakes were similar among treatments, except during week 1 of lactation where feed intake was lower in the control group. It was concluded that exposures up to 8 V did not impair the welfare, reproductive performance, or health of sows and suckling pigs.

3.18.2. Sheep[11]

Duvaux-Ponter (2005) performed an avoidance test to determine the threshold level at which sheep perceive the electric shock, and their behavioral responses. Ewes had free choice to eat from one of two metallic feeders. A voltage was then applied from to the feeder in which the ewe initially started to eat to a metal floor-plate on which the ewe stood. This allowed the ewe to change to the non-electrified feeder if it wanted to. The voltage was increased daily in steps of 0.5 V from 1 V up to 8 V. At 5.5 V and above, the ewes tended to spend more time eating and to eat more from the non-electrified feeder

[11] *The two studies reported here are the only published works in which sheep were exposed to voltage and current levels typical of stray or tingle voltage. There have been other studies on sheep with extremely high level of current exposure used for electro-immobilization during shearing (Rushen, 1986; Kuchel, 1990) intentionally stressful foot-shocking. (Domanski, 1986, 1989, 1992; Morris, 1997; Prsekop, 1984, 1985, 1986, 1990) electric fences for training (Cavani, 1994) and electro-acupuncture for analgesia (Bossut, 1986). These exposures generally produced pronounced behaviors and some produced hormonal responses.*

compared with the electrified feeder. The number of ewes which suddenly removed their heads while eating in the electrified feeder was higher at 4 V and 5 V compared to no voltage. The authors concluded that a voltage of 5.5 V appears to be the threshold at which avoidance behavior starts for a large number of the ewes, but that there were differences in the responsiveness of animals. Further research on resistance values was recommended to account for some of this variability. In a second study with the same methodology but using lambs, Duvaux-Ponter (2006) reported that they avoided feed bowls starting at a threshold of 5 V.

3.18.3. Poultry

Wilcox (1986) reported on a field study in a laying facility in which egg production and feed consumption were reduced by about 1/3 in the span of 1 week. Potentials of 0.8 to 0.9 V between the metal cage and water in the plastic cups and a 1.3 V to 1.5 V potential between the cage and a driven ground rod were measured. Reduction of voltage potentials was associated with water and feed consumption and egg production returning to normal levels. It was speculated that electrical disturbances could be a source of production loss in cage layers.

McFarlane (1988; 1989) studied the effects of electric shock on health, behavior, and performance of chicks. Chicks were exposed to currents increasing from 2.9 mA on Day 1 to 8.7 mA on Day 7, applied from one point on a foot to another. When exposed to this between 10 and 17 days of age, chicks' weight gain was reduced by 12%, feed intake by 5% and gain:feed by 8%. Chicks were reported to habituate to the shock over time. Effects of multiple concurrent stressors chicks was also studied using intermittent electric shock between 2.9 and 8.7 mA, ammonia, beak trimming, coccidiosis, heat stress and continuous noise as stressors. All stressors, except noise, decreased weight gain, feed intake and feed conversion efficiency. Performance results indicated that chicks responded to each stressor in the same fashion regardless of whether a stressor occurred singly or concurrently with up to five others.

Halvorsen (1989) reported on a field investigation of turkeys poults that experienced increased mortality. Alternating current voltage potentials of up to 2.5 V was detected between waterers and the floor. Reduction of voltage potentials was associated with resolution of the mortality problem. A series of experiments was subsequently conducted to determine the sensitivity of turkey poults to alternating current. It was concluded based on these experiments that the voltage levels measured at the farm did not cause the mortality experienced.

Villeneuve (1990) investigated the effects of both continuously applied voltages from 1 V to 9V in three separate experiments and randomly applied voltages from 3 V to 9 V in a fourth experiment. voltages were applied between the nipple drinker and the metallic cage on 30 hens laying hens per treatment. Each experiment lasted from 2 to 4 weeks. Up to 3 V of continuous exposure had no effect on laying rate, daily feed intake, or daily water intake. Exposures of up to 6 V also had no effect on laying rate but did influence feed and water behaviors at times but these differences were inconsistent and overall there was no effect of treatment. Randomly applied voltage of up to 9 V had no influence on laying rate, daily feed intake or daily water intake. The authors concluded that up to 9 V of continuous or randomly applied voltage does not impair egg production, and that the electrical resistance of hens from beak to foot was much higher than that of dairy cattle and pigs.

Vidali (1995; 1996) studied the effects of sinusoidal voltages applied between metallic nipple drinker and the metallic cage on 120 laying hens in 7 different experiments and chopped sinusoidal voltages an another group of 120 laying hens in 5 additional experiments. Neither sinusoidal nor chopped sinusoidal voltage differences as high as 18 V had an effect on the hens' production and behavior. The electrical resistance of 23- and 40-week-old hens was measured and found to vary between 350,000 and 544,000 Ohms.

Worley (2000a; 2000b; 2001) investigated concerns of poultry producers that the number of eggs that end up on floors and between slats rather than in nests may be related to voltage exposures. A field survey was done on 15 farms and reported that it was difficult to gauge the extent of the exposure problems because of the fluctuation in voltage levels. While there was no correlation between percent of floor eggs and the amount of voltage found, the author speculated that voltage may be a contributing factor to floor and slat egg problems. Subsequent experiments were performed in which mature and young hens were subjected to 0, 3, 6 or 9 V between slats and laying nests. These data indicated no difference in laying habits between any of the treatments and control pens, however all of the groups of hens (including the control groups) had a high incidence of laying eggs in locations other than the nest, indicating that factors other than the applied voltage may have been causing a floor egg problem.

3.19. Summary and Synthesis of Research

3.19.1. Compilation of Dairy Cow Reponses to Current Dose

Figure 5 illustrates the combined results of studies on dairy cows in which an ascending series of 60 Hz current was applied through various body pathways until a behavioral response threshold was observed. These data were compiled from the following studies: Aneshansley, 1997, 1999; Craine, 1975; Currence, 1990; Gorewit, 1984; Lefcourt, 1982, 1986; Norell, 1985; Reinemann, 1995, 1996, 1999b, 2003b, 2003c; Whttlestone, 1975; Woolford, 1972; and represent 355 cows, in 15 separate experiments, by 9 research groups, across 31 years and two continents. The studies summarized in Figure 5 all verified that current flowing through an individual cow during the course of a series of tests in which the current dose was gradually increased until a pre-defined behavioral response was observed. These tests allow for the specification of response thresholds for individual animals. All of the response levels have been converted into equivalent 60 Hz rms steady state levels using relationships from measurement practice (e.g. 1 milliamp measured from zero-to-peak for a sinusoidal waveform = 0.707 mA rms) and from neuro-electric models with experimental verification (e.g. the response to a single cycle sinusoidal stimuli is equivalent to about 80% of the same waveform applied in a continuous or multiple cycle manner).

The green line in Figure 5 indicates a mild behavioral response noted by the researchers in those studies that were designed to determine this type of behavioral response threshold. The majority of these (from 10% to 90% of cows) fall between 3 and 8 mA of 60 Hz rms current with the 50th percentile just below 5 mA.

In some of these experiments, researchers increased the current exposures above the level required to achieve the first, mild behavioral response and recorded current level that produce stronger or more

pronounced behavioral responses. Many of the research groups noted rapid acclimation to the current levels just sufficient to produce subtle behavioral responses and increased current exposure levels in order to obtain a more repeatable (stronger or more pronounced behavioral) response. One study represented in this pronounced behavior group (Reinemann, 2003b) used involuntary muscle contraction was used as the response threshold when an ascending series of current was applied between muzzle and all hooves. The threshold of involuntary muscle contraction would be expected to occur at higher current does levels than the threshold of sensory stimulation. This threshold was chosen as being a more repeatable metric that the sensory response threshold for purposes of comparing responses to different current waveforms but was not judged to be painful to cows by trained observers. The sample of 125 cows represented by a discomfort behavioral response is indicated by the yellow line in Figure 5 with the 10% to 90% values spanning 4 mA to 9 mA and the 50th percentile at 6.5 mA.

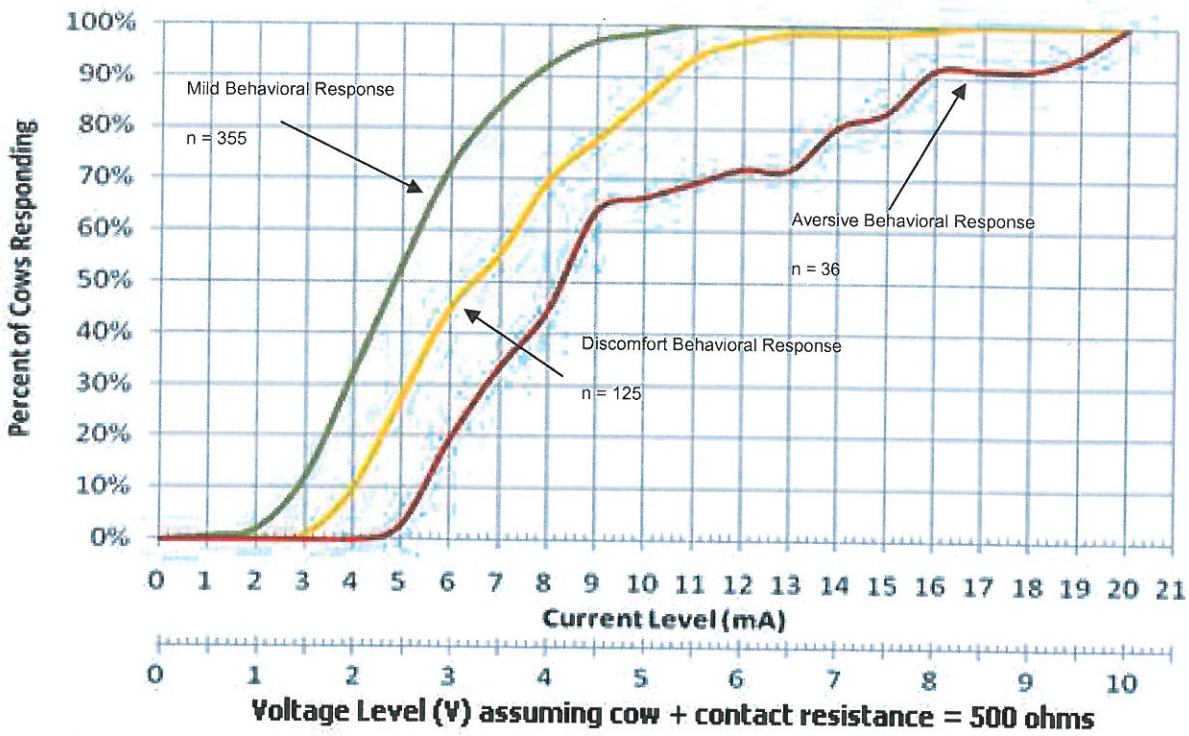

Figure 5. Summary of Behavioral Response thresholds for Dairy Cows exposed to ascending series of 60 Hz current exposures. Current is expressed in equivalent 60 Hz rms values.

Aversive response thresholds (stop drinking) and those studies in which researchers identified thresholds at which cows appeared to be in pain are indicated by the red line in Figure 5. This threshold has been documented by the least number of studies (36 cows) and fall in the range from about 5 mA up to 16 mA of current dose, with the 50th percentile just above 8 mA. The comparison of the 50th percentile values for these three response types give a good indication of the general relationship between sensation, motor response and annoyance, as is predicted by neuro-electric theory: first

behavior 5 mA, pronounced behavior 6.5 mA (or 1.3 times first behavior), aversion 8 mA (or 1.6 times first behavior).

Table 2. summarizes the experiments in which groups of cows were exposed to a constant current when attempting to eat or drink or during milking (depending on the specific experiment). The cows in these studies are not included in the summary presented in Figure 5 because an ascending series of current was not used to determine a response threshold. The individual responses of cows was also not generally reported in these studies, however, the researchers often noted the general pattern of responses (e.g. "some cows showed behavioral changes"). The experiments summarized in Table 2 represent over 260 cow tests (some cows were used in multiple experiments).

Table 2. Summary of experiments in which groups of cows were exposed to constant current stimulus when attempting to eat or drink, or during milking.

mA	Author	Year	# Cows	Exposure Pathway	Responses
1.0	Gustafson	1985	6	FH-RH on wet expanded metal plates	NC in hoof lifting (31% compared to 27% for control)
1.0	Gustafson	1985	6	Metallic mouth bit – AH on wet metal plates	NC in mouth Opening (7% compared to 8% for control)
1.0	Norell	1983	7	FH-RH on metal plates in water filled containers	NC in Hoof lifting (23% compared to 18% for control)
1.0	Norell	1983	7	Metallic mouth bit – AH on wet metal plates	Increased mouth opening (14% compared to 0% for control)
1.5	Gustafson	1985	6	Body (metal plate with gel) to AH on wet expanded metal plates	NC in behaviors (30% compared to 26% for control)
2.0	Gustafson	1985	6	FH-RH on wet expanded metal plates	NC in hoof lifting (24% compared to 27% for control)
2.0	Gustafson	1985	6	Metallic bit in mouth to AH on wet expanded metal plates	NC in mouth opening (18% compared to 8% for control)
2.0	Norell	1983	7	FH-RH on metal plates in water filled containers	NC in hoof lifting (25% compared to 18% for control)
2.0	Norell	1983	7	Metallic mouth bit – AH on wet metal plates	Increased mouth opening (30% compared to 0% for control)
2.5	Lefcourt	1986	7	Hock - Hock EKG patches	Mild Behaviors 2 of 7 cows, NC in heart rate, prolactin, glucocorticoids, epinephrine
3.0	Gustafson	1985	6	FH-RH on wet expanded metal plates	Increased hoof lifting (62% compared to 27% for control)
3.0	Gustafson	1985	6	Body (metal plate with gel) – AH on wet expanded metal plates	NC Behaviors (43% compared to 26% for control)
3.0	Gustafson	1985	6	Metallic mouth bit-AH on wet metal plates	Mouth Opening increased (42% compared to 8% for control)
3.0	Norell	1983	7	FH-RH on metal plates in water filled containers	Increased Hoof lifting (43% , compared to 18% for control)
3.0	Norell	1983	7	Metallic mouth bit – AH on wet metal plates	Increased mouth opening (69% compared to 0% for control)
3.6	Lefcourt	1985	7	Hock-Hock EKG Patch, 5s on 25 s off during milking, 7 days	Some behavior change; NC in MY, milking time, or WMT; Oxytocin and Prolactin release delayed in some cows
4.0	Gorewit	1984	6	Udder-AH, during milking for 7 days	Some Behavior change; NC in MY or composition, peak milk flow, milking time, residual milk or SCC

4.0	Gorewit	1984	8	Sub-dermal spinal Electrode for 5 min. 6 times/day	Some Behaviors with acclimation, NC in MY, Milk composition, SCC, water or feed intake
4.0	Gorewit	1984	6	Sub-dermal Spinal Electrode before and during milking every other morning milking for 6 days	Increased heart rate and blood flow before milking but no effect on Heart rate and blood flow during milking
4.0	Gustafson	1985	6	FH-RH on wet expanded metal plates	Increased hoof lifting (66% compared to 27% for control)
4.0	Gustafson	1985	6	Metallic mouth bit-AH on wet metal plates	Increased mouth opening (60% compared to 8% for control)
4.0	Norell	1983	7	FH-RH on metal plates in water filled containers	Increased Hoof lifting (72%, compared to 18% for control, p<0.01)
4.0	Norell	1983	7	Metallic mouth bit-AH, wet metal plates	Increased mouth opening (92% compared to 0% for control)
4.5	Gustafson	1985	6	Body (metal plate with gel) to 4 Hooves, wet expanded metal plates	NC in behavior (39% compared to 26% for control)
5.0	Aneshansley	1992	8	Copper Electrodes in teat cups to rear hooves on metal plate, During milking (L1 cows)	Behavioral Responses, NC in MY, composition or SCC; Reduced milking time
5.0	Gustafson	1985	6	FH-RH, wet expanded metal plates	Increased hoof lifting (84% compared to 27% for control)
5.0	Gustafson	1985	6	Metallic mouth bit-AH, wet metal plates	Increased mouth opening (74% compared to 8% for control)
5.0	Lefcourt	1982	5	Hock-Hock EKG Patch, before, during and after Milking	MY and milking time decreased with intermittent voltage, but not continuous voltage; NC in Oxytocin or catecholamine
5.0	Lefcourt	1986	7	Hock-Hock EKG Patch	7 of 7 cows show mild behaviors, NC in heart rate, prolactin, glucocorticoids, epinephrine
5.0	Norell	1983	7	FH-RH, on metal plates in water filled containers	Increased hoof lifting (97%, compared to 18% for control, p<0.01)
5.0	Norell	1983	7	Metallic mouth bit – AH on wet metal plates	Increased mouth opening (98% compared to 0% for control)
5.0	Norell	1985	7	Muzzle pressing a metal plate - AH	Changes in Learned Behavior
6.0	Gustafson	1985	6	Body (metal plate with gel)- AH on wet expanded metal plates	Behavioral Change (49% compared to 26% for control)
6.0	Lefcourt	1985	6	Hock-Hock EKG Patch, 5s on 25 s off during milking, 7 days	1 cow could not be milked, behaviors in others; NC in; MY, Milking Time, or WMT; Oxytocin and Prolactin release delayed in some cows
7.5	Gustafson	1985	6	Body (metal plate with gel) – AH on wet expanded metal plates	Behavioral Change (64% compared to 26% for control)
7.5	Lefcourt	1986	7	Hock-Hock EKG Patch,	7 of 7 cows show pronounced behaviors, NC in heart rate, prolactin, glucocorticoids, or epinephrine
8.0	Aneshansley	1992	8	Copper Electrodes in teat cups - RH on metal plate, During milking (ML)	Behavioral Responses, NC in MY, composition, SCC, or milking time
8.0	Gorewit	1984	6	Udder-AH, during milking for 7 days	Behavioral Responses, Slight increase in Cortisol and Oxytocin, NC in MY, Milking Time, Peak Milk Flow, Residual Milk, Protein, Fat, SCC
10.0	Lefcourt	1986	7	Hock-Hock EKG Patch,	2 of 7 cows show extreme behaviors, increased heart rate, epinephrine increased in 2 cows, NC in prolactin or glucocorticoids
12.0	Lefcourt	1985	3	Hock-Hock EKG Patch,, 5s on 25 s off during milking, 7 days	Extreme Behaviors in 3 cows, experiment stopped
12.5	Lefcourt	1986	7	Hock-Hock EKG Patch,	5 of 5 cows show strong behaviors,

					increased heart rate, 2 of 2 cows increased epinephrine and glucocorticoids.

Notes: shading code: **None** = no change in behavior in any cows, **Green** = mild behaviors in some cows, **Yellow** = discomfort behavior in some cows, **Red** = aversion in some cows. **NC** = No Change, **FH**= Front Hooves, **RH** =Rear Hooves , **AH** = All Hooves, **L1** = 1st Lactation, **ML** = multiple Lactation, **SCC** = Somatic Cell Count, **WMT** = Wisconsin Mastitis Test. **Prolactin** is a hormone associated with lactation. **Oxytocin**, a similar hormone that triggers milk let-down. **Glucocorticoids** are hormones produced in the adrenal glands. **Cortisol** is the most important glucocorticoid that regulates a variety of important cardiovascular, metabolic, immunologic, and homeostatic functions. **Catecholamines** are hormones released by the adrenal glands in situations of stress, the most abundant of these are **Epinephrine (Adrenaline), Norepinephrine** and dopamine.

It is instructive to examine the group of behavioral responses that occurred below 2 mA of current dose. In an experiment by Lefcourt (1982) one cow showed a mild behavioral response to 0.7 mA of current applied to EKG patches from front to rear hocks on shaved areas of skin. It is possible that shaving of the contact areas resulted in a cut in the skin which would produce a current concentration and increased sensitivity. In one of the Norell (1983) experiments three of six cows changed plate pressing behaviors (muzzle to metal plate to receive feed) with an application of 1 mA on their first exposure to current applied in an ascending series of 0.25 mA increments (represented in Figure 5). In two subsequent exposures these cows did not change behaviors until currents of 2 to 3.5 mA were applied to the metal plate. In a second experiment by Norell (1983) cows were fitted with bits in their mouths and mouth opening was observed for 14% of the 50 exposures of 1 mA of current applied to 7 cows (Table 2). One cow out of a sample size of over 300 cows tested at the University of Wisconsin showed mild behavioral response to 1.4 mA of current applied to a metal clip in the cows' muzzle (represented in Figure 5). This study used subtle behaviors (eye blink, facial twitch) as a response threshold for current applied through a non-piercing nose clip. None of these were typical farm exposure condition. It is also possible that that a concentration of current may have occurred for these cows due to a small contact area on the muzzle plate, mouth bit or nose clip.

In summary, there may have been very few behavioral responses noted at levels between 1 mA and 2 mA of current dose, these have been for unusual exposure pathways, not typical of those occurring on farms. The vast majority of behavioral response thresholds have been documented to occur between current levels of 3 mA to 8 mA. The current levels at which the first subtle behaviors can be observed are unique to each animal and range by a factor of about 4:1 from the most sensitive to the least sensitive animal.

As the current flowing through an animal is gradually increased there is initially no response because the current density is insufficient to cause nerve stimulation. At some current threshold the action potential of sensory nerves is exceeded and mild behavioral responses can be documented by careful observation and comparison to control conditions. These mild behavioral responses would be difficult to detect in a farm setting as they would be exhibited by only a part any group of animals and would likely be lost in the normal behavioral modification from the many other stresses and group activities of farm animals. These mild behavioral reactions are not associated with changes in the physiological status of the animal (hormonal responses), do not produce aversive behaviors such as avoidance of water or feed consumption nor are they likely painful to the animal, but merely novel stimuli such as a tingling sensation.

As the current flowing through an animal is increased above the sensory nerve stimulation threshold the sensations produced by this externally applied electrical current increase in intensity and motor neurons begin to activate, resulting in involuntary muscle contraction (twitches). It is clear from the many studies done on cows and several studies done on swine and sheep that farm animals will develop adaptive strategies to deal with these stimuli which are likely experienced as moderately annoying at lower current levels and painful at higher current levels. For each individual cow the severity of behavioral response has been shown to increase as the current exposure is increased above this first response threshold and aversive behaviors occurring at levels about 1.5 to 1.6 times higher than this mild behavioral response threshold.

When animals are exposed to current levels that are capable of producing annoyance and aversion the resulting effects on farm operations depend upon the specific exposure locations and the time history of exposures. For example if the offending currents can only be accessed at locations that are not essential to daily animal activities, the effects are not likely to be important or perhaps not even observable because those animals who's individual annoyance sensitivity is exceeded will avoid this location or develop adaptive behaviors.

If the offending point of current exposure is present at some location that is necessary for the animals to make contact the responses depend on the timing of the current availability. For example, if the offending is only present for brief periods of the day (several voltage 'spikes') the result is likely to be minimal or non-existent. Animals that come into contact with annoying stimuli may be deterred from a positive motivator (food or water) for a short period but will resume normal behaviors quickly if the annoying stimuli are removed.

The most extreme response to electrical exposure will occur if the current flowing through the animal is of sufficient level to be painful and if the animals cannot avoid the offending current in the course of meeting their daily water or feed requirements. There are a number of studies which have documented delays in drinking behaviors which have been shown to occur at levels somewhat above behavioral response threshold levels and only in situations in which animals had no source of water other than the electrified location. Reduction in daily water or feed intake have also been documented but are evident only in similar forced exposure situations and at current levels above those required to produce delays in drinking or eating behaviors. This forced exposure may occur on a farm if the only source of water or feed has sufficient voltage difference between an animal contact point and the floor. The effects of this situation would be minimal or nonexistent if animal could meet their water or feed requirements in another location on the farm with lower electrical exposure levels. The application of a equipotential plane around animal waterers and feeding locations, as is required by electrical codes, is a simple electrical solution to minimize contact potentials (even when neutral voltage sources are considerable) at these critical locations on farms.

3.19.2. Compilation of Dairy Cow Reponses to Constant voltage Exposures

Figure 6 illustrates the combined results of 28 tests on 11 cows in which an ascending series of 60 Hz voltage was applied through various body pathways until a behavioral response threshold was observed (Whttlestone, 1975; Lefcourt, 1982). There are many fewer data for this type of experiment as most

researchers quickly shifted from controlled voltage to controlled current exposures to characterize individual animal response thresholds in an attempt to improve reputability of responses.

Most of the studies that used constant voltage exposure have report on group average rather than single animal responses but many of these studies give some indication behavioral responses. Table 3 presents a summary of experiments in which groups of cows were exposed to constant voltages while drinking, eating or during milking. Constant voltage exposure to groups of cows is more representative of exposure conditions encountered on a farm, in which voltage exposures are relatively constant but current dose will vary because of differences in cow body resistances and variations over time in contact resistances. Given the distribution of current sensitivities presented above, it would be expected that at moderate voltage levels some cows may show behavioral responses while others would not. Acclimation has also been noted by many researchers. This would manifest in a reduction in behavioral responses and aversion over time.

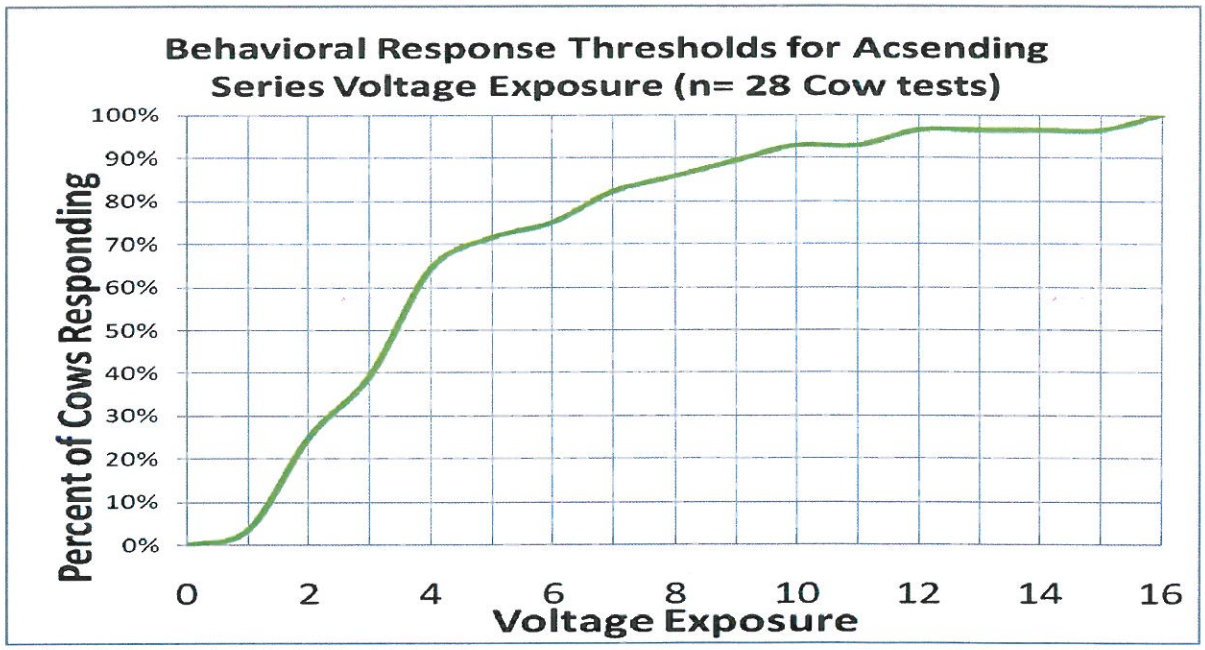

Figure 6. Summary of Dairy Cow Response Thresholds to Ascending voltage Series Exposure.

The data presented in Figure 6 is of limited value in establishing definitive response thresholds because these data represent a variety of exposure pathways, most not representative of farm conditions and relatively few cows. It is instructive to examine the responses that occurred below 2 V. Five of these were from an experiment by Lefcourt (1982) in which voltage was applied to EKG patches from front to rear hocks on shaved areas of skin. Another 2 cows were from the experiment by Whittlestone (1975) when voltage was applied between metal plates applied to cows' rumps with conductive gel. Neither of these conditions are representative of farm conditions.

A much large sample size is represented in the many studies in which groups of cows were exposed to constant voltages when attempting to drink or eat or during milking summarized in Table 3. These exposure conditions are more representative of farm conditions and represent over 800 cow tests (some cows were used in multiple experiments).

Table 3. Summary of experiments in which groups of cows were exposed to constant voltage when attempting to eat or drink, or during milking.

V	Author	Year	# Cows	Exposure Pathway and Duration	Responses
0.5	Gorewit	1989	6	Metallic Water Bowl to metal floor plate, 21 Days (0.6 to 1.3 mA)	No delay to drink, NC in daily water Intake, milk production or composition
1.0	Gorewit	1989	6	Metallic Water Bowl to metal floor plate, 21 Days (1.2 mA to 4.0 mA)	Delay to drink in some cows (average about 2 hrs), NC in daily water Intake, milk production or composition
1.0	Gorewit	1992	10	Metallic Water Bowl to FH on metal grid, full lactation	Delay to drink in some cows, NC in feed or water intake, SCC, MY or composition, health or reproductive performance
1.0	Gorewit	1997	4	Metallic Water Bow to FH on metal floor mats, 7 days	Unspecified delay to drink; NC in water or feed, MY or composition, SCC or *staph. aureus* infected quarters, blood chemistry, milk microbiology or cortisol;
1.0	Gorewit	1999	4	Metallic Water Bow to FH on metal floor mats, 7 days with *strep. uberis* mastitis challenge	NC in milk production, feed or water intake, SCC, milk fat or protein
1.0	Gumprich	1992	30	1 V morning and evening for 3 hrs each, 0.3 V other times of day from water bowl and stalls to metal grid at rear of stall, for 2 periods of one week each over 16 weeks	NC in behavior, daily milk production, milking time, water consumption, feed consumption, breeding; Increased milk fat
1.8	Southwick	1992	120	Switchback Farm Study , Maximum cow contact voltage measured waterline - floor	NC in water (although higher during exposure), milk production, SCC (although lower during exposure)
1.85	Craine	1975	30	Ascending 1.85 to 8 V water bowl – AH, 5 days (2-day recovery)	NC in water intake
2.0	Aneshansley	1992	7	Copper Electrodes in teatcups to RH on metal plate, During milking (L1)	NC in behavior, MY or composition, SCC or milking duration
2.0	Gorewit	1989	6	Metallic Water Bowl to metal floor plate, 21 Days (4.7 to 7.9 mA)	Delay to drink (average 3 hrs), NC in daily water Intake, MY or composition
2.0	Gorewit	1992	10	Metallic Water Bowl to FH on metal grid, full lactation	Delay to drink in some cows, NC in feed or water intake, SCC, MY or composition, health or reproductive performance
2.0	Gorewit	1997	4	Metallic Water Bow to FH on metal floor mats, 7 days	Unspecified delay to drink; NC in water or feed intake, MY or composition, SCC or *staph. aureus* infected quarters, blood chemistry, milk microbiology or cortisol;
2.0	Gorewit	1999	4	Metallic Water Bow to FH hooves on metal floor mats, 7 days with *strep. uberis* mastitis challenge	NC in milk production, feed or water intake, SCC, milk fat or protein
2.0	Rousell	2007	20	Metallic Feed Bowls to AH on metal floor plate (L1)	heifers performed muzzle-grooming ($P<0.01$) and head shaking
2.3	Rousell	2007	20	Metallic Feed Bowls to AH on metal floor plate (L1)	percentage feed eaten and time spent eating in the electrified feeder decreased

2.5	Gumprich	1992	30	water bowl and stalls to metal grid at rear of stall, 2.5 V morning and evening for 3 hrs each, 0.75 V other times of day from, for 2 periods of one week each over 16 weeks	NC in behavior, MY or composition, water or feed consumption, or breeding; 12 second longer milking time
3.0	Craine	1975	70	Free choice of Watering Devices with 0 V, 3 V, 6 V, or 8 V	Waterer nearest the cows always had highest water consumption regardless of voltage, average at 3-V waterer was 20% lower than control
3.0	Gorewit	1989	20	Metallic Water Bowl to metal floor plate, 2 Days (5.1 to 8.7 mA)	Average delay to drink 4 hrs; NC in daily total water intake
3.0	Rousell	2007	20	Metallic Feed Bowls to AH on metal floor plate (L1)	heifers changed more quickly to the non-electrified feeder
4.0	Aneshansley	1992	7	Copper Electrodes in teat cups to RH hooves on metal plate, During milking (L1)	Behavior changes, NC in MY or composition, SCC or milking duration
4.0	Aneshansley	1992	8	Copper Electrodes in teat cups to RH on metal plate, During milking (ML cows)	NC in behavior, MY , SCC or milking duration, 0.1% increase in Protein
4.0	Craine	1975	30	Ascending 1.85 to 8 V water bowl – AH, 5 days (2-day recovery)	Water suppression, gallons per drink increased, resumed normal drinking during the 2-day recovery period
4.0	Gorewit	1989	20	Metallic Water Bowl to metal floor plate, 2 Days (6.4 to 11.8 mA)	Average delay to drink 8 hrs; NC in daily total water intake
4.0	Gorewit	1989	6	Metallic Water Bowl to metal floor plate, 21 Days (5.5 to 12.1 mA)	2 Cows did not drink for 36 hrs and removed, Remaining cows average delay to drink about 8 hours, NC in daily total water; 7.5% decreased feed in 1 cow
4.0	Gorewit	1992	12	Metallic Water Bowl to FH on metal grid, full lactation	1 Cow and 1 heifer did not drink for 36 hrs and were replaced, Remaining 10 cows drank after some delay; NC in feed or water intake, MY or composition, SCC, health or reproductive performance
4.0	Gorewit	1997	4	Metallic Water Bow to FH on metal floor mats, 7 days	Unspecified delay to drink; NC in water or feed intake, MY or composition, SCC or *staph. aureus* infected quarters, blood chemistry, milk microbiology or cortisol;
4.0	Gorewit	1999	4	Metallic Water Bow to FH on metal floor mats, 7 days with *strep uberis* mastitis challenge	NC in MY, feed or water intake, SCC, milk fat or protein
5.0	Gorewit	1989	22	Metallic Water Bowl to metal floor plate, 2 Days (8.6 to 15.2 mA)	2 heifers did not drink for 36 hours and were replaced; remaining 20 cows showed Average delay to drink 8 hrs; NC in daily total water intake
5.0	Gumprich	1992	30	5 V morning and evening for 3 hrs each. 0.75 V other times of day from water bowl and stalls to metal grid at rear of stall, for 2 periods of one week each over 16 weeks	Reduced water intake and residual effect on milk production: NC in milking time, milk composition, feed consumption, or breeding
6.0	Craine	1975	30	Ascending 1.85 to 8 V water bowl – AH, 5 days (2-day recovery)	Water suppression, gallons per drink increased, resumed normal drinking during the 2-day recovery period
6.0	Craine	1975	70	Free choice of Watering Devices with 0 V, 3 V, 6 V, or 8 V	Waterer nearest the cows always had highest water consumption regardless of voltage, average water at 6-V waterer 66%

					lower than control
6.0	Gorewit	1989	22	Metallic Water Bowl to metal floor plate, 2 Days (9.2 to 17.4 mA)	2 heifers did not drink for 36 hours and were replaced; remaining 20 cows showed Average delay to drink 10 hrs; NC in daily total water intake
7.0	Craine	1976	30	Ascending 1.85 to 8 V water bowl – AH, 5 days (2-day recovery)	Water suppression, gallons per drink increased, resumed normal drinking during the 2-day recovery period
8.0	Aneshansley	1992	7	Copper Electrodes in teat cups to rear hooves on metal plate, During milking (L1 cows)	Behavior changes, NC in MY or composition, SCC or milking duration
8.0	Aneshansley	1992	8	Copper Electrodes in teat cups to RH on metal plate, During milking (ML cows)	Behavior changes, NC in MY or composition, SCC or milking duration
8.0	Craine	1975	70	Free choice of Watering Devices with 0 V, 3 V, 6 V, or 8 V	Waterer nearest the cows always had highest water consumption regardless of voltage, average water at 8 V waterers was lower than the control.
8.0	Craine	1977	30	Ascending 1.85 to 8 V water bowl – AH, 5 days (2-day recovery)	Discontinued after 1 day, many cows refused to drink.
16.0	Aneshansley	1992	8	Copper Electrodes in teat cups to RH on metal plate, During milking (ML cows)	Behavior changes, NC in MY or composition, SCC or milking duration

Notes: Response shading code: **None** = no change in behavior in any cows, **Green** = mild behaviors in some cows, **Yellow** = more pronounced behavior with delays to drink in some cows, **Red** = Strong aversion in some cows. **NC** = No Change, **FH**= Front Hooves, **RH** =Rear Hooves , **AH** = All Hooves, **L1** = 1st Lactation, **ML** = multiple Lactation, **SCC** = Somatic Cell Count, **WMT** = Wisconsin Mastitis Test. **Prolactin** is a hormone associated with lactation. **Oxytocin**, a similar hormone that triggers milk let-down. **Glucocorticoids** are hormones produced in the adrenal glands. **Cortisol** is the most important glucocorticoid that regulates a variety of important cardiovascular, metabolic, immunologic, and homeostatic functions. **Catecholamines** are hormones released by the adrenal glands in situations of stress, the most abundant of these are **Epinephrine (Adrenaline), Norepinephrine** and dopamine.

The highest voltage exposures required to produce a behavioral response is in excess of 15 V. The vast majority of behavioral responses have been noted between 1 V and 8 V. It is instructive to further examine those studies that found behavioral modification at 1 V exposure levels. These were a series of studies performed at Cornell University in which the voltage was applied between a metallic water bowl and a metal plate on the floor in contact with cow's front hooves when drinking. The researchers noted mild behavioral modification of some delay to drink on the first day of voltage exposure but these mild behavioral responses were not shared by all cows and were not sufficient to alter the total daily water consumed by cows.

These studies were repeated several times with exposures of 1 V, 2 V and 4 V applied from water bowl to front hooves on a metal plate for varying amount of time ranging from several days up to a full lactation (305 days). It is clear from these repeated studies that mild behavioral responses were evident on the first day of exposure at the 1 V groups for some cows. As the voltage levels increased to 2 V more cows began to show behavior modification, and at 4 V the behavioral modification became again more apparent. There were several cows at the 4 V exposure level and several cows exposed to 6 V that refused to drink for 36 hours and were removed from the study. These cows represent only a small percentage of all cows tested and it was only at levels of 4 or 6 V that these dramatic aversions

occurred. Most cows adapted to these exposure levels in a way that did not change their total daily water consumption even on the first day of exposure.

3.19.3. The Solution to Contact Resistance

The combined data from constant voltage exposures representing over 850 cow tests and constant current exposures representing over 750 cow tests provides useful input to the problem of contact resistance. The vast majority of behavioral responses occur between current doses of 2 and 10 mA and between voltage exposures of 1 and 8 V. This implies a range real-world cow + contact resistance between 500 Ohms and 1000 Ohms as estimated by the authors of USDA handbook 696 (1991). There are a limited number of behavioral responses reported in the Cornell studies at 1 V exposure when the contact points were a metallic water bowl and metal plate in contact with cow's front hooves (that may have been wet because of its proximity to the water bowl). Spot checks of current delivered in these studies indicated that cow+contact resistance ranged between 250 Ohms (likely at those times in which the foot contact resistance was reduced to a negligible value on a clean, wet controlled metal plate) and 830 Ohms (likely at those times when the foot contact resistance was increased to a value in the range of 250 ohms for a dry metal plate and/or some debris present on the plate). The average cow + contact resistance in these spot checks was about 500 Ohms.

It is instructive to compare responses to the multiple Cornell studies that used 1 V, 2 V, and 4 V exposures to the New Liskeard Study that used exposures of 1 V, 2.5 V and 5 V continuously with periods of elevated voltages. The New Liskeard study used a more typical concrete contact surface for cow's rear hooves. They did not observe changes in the cows' behavior, feed consumption or production at the 1 V and 2.5 V exposure levels. They did observes some changes in the water and feeding behaviors at the 5 V exposure level but did not report the extreme aversion of a few cows refusing to drink for 36 hours as noted in the Cornell studies at the 4 V exposure level. This is consistent with higher cow+contact resistance and lower current dose produced by the more realistic concrete floor surface used in the New Liskeard studies compared to the metal plate used in the Cornell studies.

The results of the combined current dose response experiments, voltage exposure response experiments, and measurements of body and contact resistances is also consistent with the lowest (worst case) cow + contact resistance as low as 500 Ohms as estimated by the authors of USDA handbook 696 (Lefcourt, 1991) that may occur in some unusual situations on farms (firm application of the muzzle to a wet metallic watering device and hoof contact on a clean, wet, contoured metallic plate on the floor).

These studies on responses of dairy cows to electrical exposure agree well with each other and with predictions from neuro-electric theory and practice. There is a high degree of repeatability across studies in which exposures and responses have been appropriately quantified.

3.19.4. Animal Health and Production

Several studies have documented changes in animal productivity (dairy cow milk production, swine weight gain) but only as a result of current exposures well above those required to produce behavioral modification and only in forced exposure conditions. Likewise there have been some studies that have

documented increases in stress hormone levels in animals but these have occurred in only some animals and only at extreme exposure levels that also produce extreme behavioral responses.

The several studies that have been done to examine direct physiological responses at current exposure levels below the behavioral response threshold (Reinemann, 1999a; Sheffield, 2003). These studies were designed to examine a fundamentally different type of exposure than the relatively short duration exposures that might occur when animals are eating, drinking, being milked, or being moved between building transitions. The premise in these studies was that cows immune function might be affected by continuous exposure to low level voltage and current as might be produced by currents flowing in the earth; the hypothesis presented by the Minnesota Science advisors. In both of these studies, current was applied from front to rear hooves for 12 to 24 hours per day for periods of 2 or 3 weeks. The current dose in both of these studies was 1 mA, which was chosen to be below the behavioral response threshold for any cow (and indeed no behavioral responses were observed) but 100 to 1000 times higher than would be generated by currents flowing in the earth. In the first of these studies (Reinemann, 1999a) one of 13 response variables was statistically significant but did not appear to be entirely consistent with other observations. And physiological experts concluded that, collectively, these results suggest that exposure to 1 mA of 60 Hz electrical current for two weeks had no significant effect on immune function of dairy cattle.

In the second study (Sheffield, 2003) used a new technique to measure a several thousand gene expression responses to 1 mA of current exposure for 3 weeks. There were possible changes in 3 parameters, however, the researcher noted that most measures were not affected, suggesting that those that were could be Type I errors, due to the large number of hypotheses tested. To put this possible response in context, a recent study on gene expression in cows Moyes (2008) found that mastitis infection resulted in 2,104 differentially expressed genes. Sheffield (2003) concluded that these studies suggest that electrical impacts on immune function are of relatively small impact compared with infection and inflammation. Any effects observed appear to affect only a small subset of immune system regulators, compared with most disease processes, which affect a wider spectrum of regulators. As a result, impacts of electrical exposure on animal health and disease is likely to be difficult to detect reliably, particularly without examining large populations, and would therefore be undetectable on commercial farms.

Controlled research clearly indicates that while it is possible to induce physiological changes in dairy cows as the result of electrical exposures, these responses occur at exposure levels well above those that produce behavioral changes. The extensive field data collected by the PWSC (2007) provides further confirmation of these experimental results.

4. voltage/Current Sensitivity by Contact Location and Animal Type

4.1. Exposure at watering devices

Farm animals' Contact with watering devices has been the most widely studied area of stray voltage exposure. Water intake is essential for animal productivity and health. Metallic water pipes are required by electrical codes to be bonded, or electrically connected, to the grounded neutral system of a farm. This connection to the grounded neutral system provides a path for fault current in the event that an energized or 'live' wire comes into contact with metal pipes. This fault path allows the circuit breakers to activate and de-energize the faulted wire to prevent the risk of electrocution. This connection also provides a conduit for neutral voltage to access watering devices. Watering devices are therefore one of the more likely points of contact between farm animals and neutral to earth voltage.

4.1.1. Contact pathways and risk reduction

The watering device provides one contact point to the animals' mouth or muzzle. The resistance of this contact point is quite variable depending on the specific type or watering device. For example, in a large concrete tank from which cows can drink without making physical contact with the concrete, the contact resistance is quite high, as water is a relatively poor conductor of electricity. When drinking from a metallic water bowl, typical of a tie-stall or stanchion barn application, a large area of a cow's muzzle must make firm contact with a large metallic paddle in order to start the flow of water into the bowl. The contact resistance in this scenario is quite low. There are other types of watering devices that have intermediate muzzle contact resistance such as heated waterers that may use a float to control water levels. Some watering devices are made of plastic which is also a relative poor conductor of electric current.

The second contact point at watering locations is usually the floor surrounding the watering device. The contact resistance of this surface will be influenced by the type of flooring (usually concrete), the amount and type of debris that may be present of the floor and the wetness of the floor. The experiments that have been done using used flooring conditions designed to minimize this contact resistance (a clean, wet metal plate with some contouring to clean hooves and provide points of high pressure to facilitate a low resistance electrical connection) that it has not been possible to maintain this low resistance continuously and during the course of a day this contact resistance ranged from a few Ohms up to several hundred Ohms (Gorewit, 1992). Experiments that have been done using a more normal concrete floor have indicated that this contact resistance typically ranges between several hundred and several thousand Ohms depending mainly on the amount of water and/or urine standing on the floor surface.

The 'worst case' or lowest resistance value for the contact resistance recommended by the authors of USDA handbook 696 is about 150 Ohms. This combined with that average cow body resistance from muzzle to 4 hooves provides a cow + contact resistance of 500 Ohms. This value is supported well by experimental evidence and is a reasonable value to use for cow + contact resistance at watering devices. Exposure risks can be reduced by:

- Using watering devices that do not required firm contact with grounded metallic components, or using non metallic watering devices
- Avoid the use of electric heating elements in watering devices if possible.
- Provide an equipotential plane around watering devices containing electrified and/or electrically conductive materials, as required by electric codes.
- Providing good drainage around watering devices to avoid standing water and urine on floor surfaces
- Provide several watering locations that are easily accessible to animals in the event that voltage exposures are excessive at one of the watering locations.

4.1.2. Symptoms of exposure and other causes of these symptoms

The primary symptoms of stray voltages at watering are changes in drinking behaviors. Mild changes in drinking behaviors, such as reduced number of drinks per day and longer interval between drinks have been documented in several studies. These changes in behavior may not be sufficient to affect total daily water intake. More severe aversions have also been observed at extreme levels of voltage/current exposure resulting in depressed daily total water intake and in some cases refusal to drink for an entire day.

Experiments have shown that when given free choice, cows show a preference to warmed water over cold water (ground water temperature) which may be perceived as an avoidance of the cold water locations. There are a number of other sensory differences that may incline cows to show a preference to one watering location rather than another, which may be perceived as avoidance of that alternate source. Avoidance of watering locations could also be due to unpleasant tastes or smells, however, the powerful drive to drink will normally overcome all but the most foul of tastes.

Lapping or playing at a watering device has been attributed to stray voltage exposure, but no controlled study has ever confirmed this behavior in the presence of voltage/current exposure. Cows may demonstrate avoidance or modified drinking behaviors in response to group dominance challenges. Cows have been shown to develop what may appear to be unusual behaviors as a way to cope with stressors such as confinement and for many other unknown reasons.

There are well developed experimental techniques to establish cause and affect relationships between a specific stimulus and a specific behavior or avoidance. It is very difficult to establish these relationships on an operating farm unless careful measurement of behaviors is done and sources variability and confounding effects are controlled for.

4.1.3. voltage/Current Sensitivity levels

Cattle

Mild behavioral modification would be expected at current levels of 2 mA for the most sensitive dairy cows, 5 mA for 50% of cows, and about 8 mA for the least sensitive cows. Using a worst case cow+contact resistance of 500 Ohms at poorly drained, wet locations surrounding watering devices, this corresponds to voltage exposure levels from 1 V for the most sensitive, 2.5 V for 50% of cows and 4 V for the least sensitive cows. While these levels have been well documented for dairy cows, it is expected

that they would also apply to beef cattle. In well designed, constructed and managed facilities in which higher contact resistances are more typical this would correspond to voltage exposure levels of 2 V for the most sensitive cows, 6 V for 50% of cows and 8 V for the least sensitive cows.

Short term avoidance behaviors, which may result in short term depression of milk production, would be expected at about 3 mA for the most sensitive cattle (1.5 to 3 V), 7.5 mA (3.8 to 7.5 V) for 50% of cattle and 12 mA (6 to 12 V) for the least sensitive cattle. Reduction in water intake and resulting decreases in milk production would only be expected if there were no other source of water than that which applied this level of current during drinking and if the current dose were consentient enough during the course of a day so that cows could not fulfill their water needs during periods of low exposure.

Swine

Kennedy (1995) found that gilts adapted avoidance behavior within 10 minutes of contact with an electric fence. Drinking behavior changes were reported at levels of 3.0 mA (Gustafson, 1986) and at 5 V (Robert,1992). Continuous exposure to 5 V with Intermittent exposure to 8 V produced some behavioral changes but did not change water intake (Goodcharles, 1993). Short term reduction in water intake has been observed at levels of 4.0 mA (Gustafson, 1986), and 8 V (Robert 1992) but that exposure up to 8 V did not impair the welfare, reproductive performance, or health of sows and suckling pigs (Robert 1996). The body + contact impedance of 12 pigs has been measured as 1031 Ohms on wet metallic flooring and 3041 Ohms on dry metallic flooring (Matte, 1992). Research thus suggests swine adapt to voltage exposure in a similar way to cattle behavioral modification in the range of 5 V in swine with avoidance behaviors at exposures of 8 V. The body + contact resistance for swine appears to be somewhat higher than for cows and 1000 Ohms appears to be a conservative value for measurement purposes.

Sheep

Ewes began to avoid electrified feed bowls when exposure levels exceeded 5.5 V (Duvaux-Ponter 2005). Lambs showed this same preferential behavior when exposure levels exceeded 5 V (Duvaux-Ponter, 2006). Neuro electric principles suggest that the current sensitivity of sheep is lower than for cows, but that their body resistance is higher than cows. Both of these would be expected because of their smaller body mass. The results from Duvaux-Ponter (2005, 2006) confirm that voltage exposure sensitivity for sheep are about twice those for cows. Future studies will provide better information on current sensitivity and body + contact resistance value.

Poultry

Exposures to voltages as high as 18 V had no effect on the hens' production and behavior. This is likely due to the very high electrical resistance of poultry which has been documented to be between 350,000 and 544,000 Ohms

4.2. Exposure at feeding devices

There have been relatively few studies that have specifically examined animal responses to voltage exposure at feeding devices. Notable in the literature are the recent studies performed in France by Roussel (2007) in which Holsteins showed preference for non-electrified feed bowls when exposures

exceeded 2.3 V, and by Rigalma (2007) in which behavioral modification (but not feed reduction) was noted at exposure levels of 3.3 V. These studies indicate that dairy cows have similar sensitivity to feeding exposures as to drinking exposures; however, the feed bowls used in these studies were not typical of those used in farm practice as they were specifically chosen to be small enough and deep enough so that cows would make contact with the electrified surface when eating.

While there are many ways in which feed is delivered to animals, it is relatively uncommon to have feeding devices that require animals to come into direct contact with metallic or conductive elements in order to obtain feed. Feeding locations also pose less of a risk because both mouth and floor contact resistances are typically higher than for watering locations because both are dryer and covered with a high resistance, dry feed or feed debris. Situations in which feed is placed on a concrete floor (feed manger) are unlikely location for problems because, even if an equipotential plane has not been purposefully installed, conductive elements are almost always present in concrete creating at least a partial equipotential plane in some areas of the barn.

The primary symptoms associated with voltage exposures at feeding locations would be the same sorts of avoidance behaviors produced by excessive voltage present at watering locations. These behaviors may be very difficult to observe in situations in which animals have free choice of several feeding locations and/or large feed mangers. The behaviors would be more apparent for situations in which animals had only one feeding location, as may occur for swine.

4.3. Exposure during milking

Several studies have been done on behavioral responses to voltage/current exposure during milking. voltage exposures are less likely to occur for dairy cows in milking parlors than at drinking locations because the metallic components of milking parlor stalls are more likely to be bonded to conductive elements in concrete floors and the floors are more likely to contain a substantial number of conductive elements. This will act to reduce both touch and step potentials.

The milking machine has been shown to be a very unlikely pathway for problematic current flow because of the very large resistance values of the milk hose and milking machine components. Milking machine components, including the long and short milk tubes, long and short pulse tubes and milking liners are good electrical insulators. The mixture of milk and air in milk tubes also has relative high resistance resistances making milk hose resistance in the range of 30,000 Ohms to 80,000 Ohms (Gustafson, 1983) depending on the milk flow rate. Several studies have documented these resistance values and the unlikely path of voltage/current exposure through the milking machine unless source voltages are well in excess of those commonly considered stray voltage, up to hundreds of V for 60 Hz and thousands of V for high frequency sensing pulses.

Cows are not required to make muzzle contact with any metallic components during milking, except in the uncommon situations in which feed might be provided during milking. The contact resistance through a pathway that includes dairy cow's coat is much higher than for muzzle contact resistance because it is drier and hair covered, thus making stall to floor potentials of less concern that water bowl potentials.

Current sensitivity levels are similar for udder-hooves pathways as for muzzle-hooves pathways but cow+contact resistance values are typically higher. A cow + contact resistance value of 1000 Ohms or more is appropriate for milking machine exposure estimation. There are numerous behavioral symptoms associated with cow's unease during milking due to fear of operators, unfamiliar surroundings or aggressive or faulty milking machine settings. Very careful measurement technique and comparison with a negative control condition would be required to differentiate electrical exposures from the many other causes of behavioral modification during milking in a field situation.

4.4. Exposure at building transitions

Step potentials may occur at building transitions where animals are walking onto concrete floors or walking from one section of floor to another which are not electrically bonded by an equipotential plane. Cows are somewhat more sensitive to single hoof-single hoof exposures than to muzzle-to-all-hooves exposures

The contact points for this exposure is from front to rear hooves. The same considerations for hoof contact resistance as was discussed in the feeding exposure section apply here. If floors are well drained and contain organic debris, the hoof contact resistance can be considerable. Cows have been shown to be slightly more sensitive to currents applied from one front to one rear hoof than for muzzle-all-hooves pathway because of the concentration of current in one hoof.

The symptoms of step potential exposure would likely be cows' hesitation to cross budging entrances, exits, or transitions. The discomfort associated with step potentials less than 10 V would not cause most cows to completely avoid the transition but could cause balking at the transition and/or rapid passing through the transition. The author had a report of a milking parlor that had in excess of 50 V at the entrance to the milking parlor. The reported behavioral modification was cows hesitating at the entrance and then 'jumping' into and out of the parlor. There were no apparent effects on milk yield or milking performance, likely because cows had developed adaptive behaviors to avoid undue stress from voltage/current exposure and once the cows were inside the relatively well bonded milking parlor the step potential was eliminated.

There are also a number of other reasons that animals might hesitate to enter or leave a building or move from one part of a building to another including; changes in light levels, shadows on the floor that may appear as obstacles, exploration of a new environment, identification of dominant herd mates and changes in temperature or ventilation levels.

The consequences of a step potential at a building transition are not likely as problematic for animal performance as similarly annoying exposures at watering devices. This exposure pathway is much less of a concern with beef cattle, swine, sheep and poultry that typically stay in the same housing area during the day, than for dairy cows that are moved 2 or 3 times per day to a different building location for milking. Beef cattle are less likely to be housed in buildings that have a concentration of electrical equipment.

5. Mitigation Measures

The source of stray voltage is a voltage that is developed on the grounded neutral wiring network of a farm and/or the electric power delivery system. The magnitude of the voltage source is a product of the current flowing on the neutral system and the resistance of that neutral system. Grounding is provided to keep the voltage potential between the neutral system and the ground below levels that could be harmful to people or animals. Neutral-to-earth, or stray voltage sources can therefore be reduced in three fundamental ways:

- reduce the current flow on the neutral system,
- reduce the resistance of the neutral system, or
- Improve the grounding of the neutral system

Equipotential planes are effective in eliminating contact potentials even if substantial levels of neutral-to-earth voltage are present.

The first step in a competent stray voltage investigation is to determine the major sources of neutral-earth voltage. Any major faults or code violations in the wiring system that could pose an electrocution hazard or are a major source of neutral to earth voltage should be corrected immediately. If the wiring systems (farm and utility) are operating correctly then the above three actions can be assessed to determine which is most practical, safe and efficient way to reduce neutral-earth voltage.

5.1. On-Farm Mitigation Measures

The quality of the farm wiring system has the largest single influence on voltage exposure levels. Farm wiring has been shown to be a major contributor to voltage sources on farms (PSCW, 2007) and equipotential planes provide effective voltage reduction even when voltage sources are considerable.

5.1.1. Farm Wiring

Farm wiring codes are designed to protect the safety of both humans and animals from electrocution and also reduce the level of neutral voltage developed on a farm. The first step in reducing neutral voltage on a farm is to ensure that wiring practices conform to electrical codes. Electrical codes are designed to limit the voltage developed on neutral wires by properly sizing these wires for the intended load. Neutral currents can be reduced by balancing 120 V loads and converting 120 V equipment to 240 V equipment whenever possible. Making good electrical connections and making sure that these good electrical connections are maintained by the proper choice of wiring materials for wet and corrosive locations will reduce the resistance of the grounded neutral system and thereby reduce neutral to earth voltage levels.

5.1.2. Equipotential Planes

Equipotential planes are part of electrical code requirements in animal confinement areas. They are especially important in areas surrounding electrically heated waterers and watering devices that have

conductive elements that are part of the farms grounded neutral system (see section on exposures at watering devices). Equipotential planes reduce exposure from both on-farm and off-farm sources of contact voltage. Every new animal confinement building should be fitted with an equipotential plane. Retrofitting equipotential planes into existing floors can be difficult and expensive but is and effective way to reduce voltage exposures. While the first priority for minimizing stray voltage is to reduce the neutral voltage source, equipotential plane provide substantial exposure reductions and also provide 'insurance' in the event of a fault (broken wire, corrosion or loose connection) that could produce a substantial neutral voltage source.

5.1.3. On farm isolation, Filters, and voltage Suppression

There are a number of devices that have been developed to be installed on farms to reduce animal contact voltages. These technologies usually act to provide isolation or partial isolation of a farmstead or to actively cancel neutral voltages by the application of a 'negative' voltage. These devices can be expensive to install and have not enjoyed a large market penetration. This may be because while some of these devices do reduce contact voltages, they are rarely needed if farm wiring conforms to electric codes. Improving the quality of farm wiring is almost always a less expensive and safer way to reduce neutral voltages than the addition of special voltage reduction devices. These special devices also require additional testing and maintenance to ensure that they remain effective.

5.2. Utility Mitigation Measures

5.2.1. Distribution Wiring

Distribution sources of neutral voltage can be reduced by;

- Reducing neutral current (increasing distribution voltage and balancing 3-phase loads)
- Reducing neutral resistance (Improving the quality of connections and increasing conductor size)
- Improving neutral grounding

A thorough investigation and engineering analysis will provide a determination of whether the distribution line is operating according to its intended design and estimate of the magnitude of neutral-to-earth voltage reduction from each of these measures.

5.2.2. Neutral Isolation

Neutral isolation acts to decouple the distribution neutral system from the farm neutral system. Neutral isolation does not directly act to reduce neutral-to-earth voltage sources. Neutral isolation may change the relative magnitude of neutral-to-earth voltage appearing at different parts of the farm and distribution system and must be exercised with caution.

Neutral isolation does not directly act to reduce neutral-to-earth voltage sources. Neutral isolation will reduce off-farm sources of neutral-to-earth voltage from accessing animal contact points if, and only if, the off-farm sources are a substantial contribution to the animal contact voltage/current. The on-farm and off-farm neutral systems are normally connected and situations can arise in which an off-farm

source of neutral-to-earth voltage is acting to reduce an on-farm source of neutral-to-earth voltage. In these situations, neutral isolation can act to increase animal contact voltage/current on the farm. Neutral isolation also removes grounding from both the farm and utility distribution system. Care must be taken to ensure that both systems are adequately grounded when their interconnection is severed. The effects of neutral isolation on a distribution system depend on the number of services that are isolated relative to the total number of services on the feeder.

5.3. Mitigating Other Sources

Voltage sources from other utility services such as phone lines, water lines and gas lines can be transported to farms by interconnection with farm grounding systems. These grounding connections can also form a parallel path across isolation devices, rendering them ineffective. The procedures for mitigating these uncommon voltage sources are to identify the specific source voltage and a careful inspection and correction of grounded neutral networks.

6. Regulatory Approaches and Guidelines to Reducing the Impact of Stray voltage on Farm Operations

Several states have conducted scientific and technical reviews and held public hearings to address concerns and inform public policy on stray voltage issues. Some States have adopted regulations dealing with stray voltage while others have developed multi-agency and stakeholder groups to develop guidelines and standard practices. Following is a brief summary of the regulatory approaches and/or guidelines adopted by several states in the USA.

6.1. Wisconsin

The State of Wisconsin has a well established inter-agency cooperative program headed by the Rural Electric Power Services Program (formerly Stray voltage Program) jointly administered by the Public Service Commission of Wisconsin and the Wisconsin Department of Agriculture, Trade and Consumer Protection with research and educational support provided by the faculty from the University of Wisconsin-Madison and the University of Wisconsin Cooperative Extension service. These activities have resulted in the development of standardized measurement protocols and a long series of educational programs and publications. Public Service Commission of Wisconsin (PSCW) has also conducted several public hearings and investigations that have resulted in orders that define and regulate stray voltage.

Docket 05-EI-106 defines stray voltage is a special case of voltage in which the neutral to earth voltage is present across points (generally grounded metal objects) in which a current flow is produced when an animal comes into contact with them. These contact points can include any two conductive points which the animal may simultaneously contact to complete a circuit which allows current to flow. PSCW also adopted standardized tests and measurements to screen for the presence of stray voltage and to diagnose the source. The PSCW ordered the utilities to use these specific, standard tests and no others. The PSCW concluded that a specific testing protocol was necessary in order to:

1. provide a consistent systematic analysis which can readily be documented and duplicated,
2. avoid needless controversy over whether an adequate analysis was performed or whether the nature of the tests were valid, and
3. To best recognize the various interests of [all] parties working on a stray voltage analysis.

The standardized tests and measurements are set forth in the 106 Order. In the 106 Order, the PSCW established a level of concern for stray voltage in Wisconsin. The level of concern is the point at which the average cow's behavior may be adversely affected. The level of concern is expressed in mA (mA), the unit of measurement for current. As previously noted, stray voltage is the voltage difference between points. However, it is actually the current flowing through the animal that affects it and, therefore, the Commission finds that the level of concern should be stated in mA measurement unit of current flow.

In Docket 05-EI-115 the PSCW updated its earlier decisions about stray voltage and its effects on cows. In the 115 Order, the PSCW modified the level of concern in Wisconsin to take into account a customer's contribution of stray voltage. The level of concern in Wisconsin for stray voltage is 2 mA of current flowing through a cow. This level of concern is a conservative, preventative level and is well below

where a cow's behavior or milk production would be harmed. In its Ultimate Findings of Fact in the 115 Order, the PSCW found that the level of concern for stray voltage that the Commission established in docket 106 is extremely conservative, because only one percent of cows perceive the presence of 1.0 mA of electrical current.

Reasonable regulation for Wisconsin, a dairy state, is to set a stray voltage level of concern at a conservative, preventative level that is below the point where moderate avoidance behavior is likely to occur. A conservative, preventative level of concern in Wisconsin is 2.0 mA of AC RMS 60 Hz current, steady state. This level of concern is well below where a cow's behavior or milk production would be harmed.

Stray voltage can occur from both on-farm and off-farm sources, so it is reasonable to apply the 2.0 mA level of concern as an overall standard that includes both sources. It is also reasonable to split this 2.0 mA overall level of concern equally between the utility and the farmer. The utility's level of concern is therefore 1.0 mA, for stray voltage from off-farm sources, and the farmer's level of concern is 1.0 mA, for stray voltage from on-farm sources. If the utility's contribution of stray voltage exceeds 1.0 mA, the utility must reduce its contribution to 1.0 mA or below. If the stray voltage from on-farm sources exceeds 1.0 mA, the Commission recommends that the farmer improve the farm wiring, grounding or equipment or take other measures to reduce the level from these sources below 1.0 mA.

In the 115 Order, the PSCW determined that stray voltage measurements should be made using a 500 ohm resistor to approximate a cow's actual resistance. Using a 500 ohm resistor in the testing protocol is conservative, because it calculates stray voltage levels that equal or exceed the actual amount of current a cow in the barn would experience.

The PSCW relied on, and found persuasive, the United States Department of Agriculture's Effects of Electrical voltage/Current on Farm Animals, Agricultural Handbook No. 696: December 1991. In the 115 Order, the PSCW issued these Ultimate Findings of Fact concerning the Handbook:

- A scientific consensus exists about the effects of stray voltage.
- The major work published on this subject is the USDA Handbook.
- The conclusions in the USDA Handbook are still shared today by all of the authors.
- Figure 4 (in this document) from USDA Handbook 696 shows research results about the effect of steady state, 60 Hz current passing through a cow. This Figure indicates that 1 mA is the lowest threshold at which the most sensitive cows perceive the presence of electricity. Stray voltage at this level has no effect on milk production.
- Currents up to 4.0 mA do not appear to inhibit the milk ejection reflex, depress milk production significantly, or increase the incidence of mastitis or other diseases of the cow.
- Above 6.0 mA, a cow's behavioral response can become severe and the loss in milk production may be due to changes in the animal, such as increased stressed hormone levels.

Long-term and on-farm experiments conducted after the publication of the USDA Handbook confirm the Handbook's conclusions. The USDA Handbook's conclusions are reasonable and remain valuable today.

The level of concern set forth in the 115 Order applies to earth currents and ground currents. For a cow to be affected by electricity, current has to flow through the cow. The level of concern of 2.0 mA of current flowing through a cow applies regardless of the source of the current.

In Docket 05-EI-108 the PSCW investigated the effects of electromagnetic fields, direct currents, and ground currents on dairy cows. Earth currents are an inherent, inevitable, and unavoidable result of a multi-grounded neutral distribution system. On normally operated grounded wye distribution systems, both ground current and earth current will flow as a result of voltages on the grounding system. The Minnesota PUC had already established a scientific advisory panel and the PSCW worked with the PUC on that study and concurred with their conclusions (see below).

The PSCW also maintains an extensive database of on-farm stray voltage investigations that dates from 1989. Data from over 8000 first time on-farm investigations from investor owned utilities and electric cooperatives. These data were collected using a standardized measurement protocol developed by the PSCW which quantifies the highest level of animal-contact current on the farm, the contribution from on-farm and off-farm sources as well as many other electrical and herd production data.

6.1. Michigan

The State of Michigan's Public Service Commission defines a preventative action level as a steady state animal contact current that meets or exceeds 2 mA RMS using a nominal 500 ohms resistor at 60 Hz from all sources, including off-premises and on-premises sources.

Measurement Methods: The level of animal contact current shall be determined from measurements of animal contact voltage using Ohm's Law. The voltage measurement shall be made between 2 points, which an animal can simultaneously contact and under which animal contact voltage is most likely to occur. When measuring from the floor or earth, a single metallic plate with an area of 12 to 16 square inches shall be used to simulate the foot of the animal. One lead of the measuring instrument shall be connected to the plate, which shall be placed on the floor or earth where an animal may stand. The other lead of the measuring instrument shall be connected to a conductive object that an animal could reasonably contact while 1 of its feet is at the location of the plate. For all measurements of animal contact voltage a shunt resistor shall be used to simulate the resistance of the animal. A suitable material, such as a medical grade electrode contact gel, shall be used to simulate real conditions and maintain conductivity to the floor or earth for the duration of the testing period.

Action required to mitigate animal contact current: If the steady state animal contact current from all sources as measured by the utility in accordance with this rule meets or exceeds the preventive action level, and if the utility contribution exceeds 1 mA RMS, then the utility shall commence action within two business days, or at a mutually agreed upon time frame between the complainant and the utility, to reduce the utility contribution to 1 mA or less.

Further sections detail procedures for: Request for an investigation, Appointment of Experts, Request for a contested case hearing, Protocol to evaluate utility contribution.

6.3. Vermont

Scruton (2003) reported that in 1994 the legislature held hearings and a program was initiated with the Public Service Board, Public Service Department, Vermont Department of Agriculture, Food and Markets, The University of Vermont and Vermont Utilities. Utilities agreed to test all farms for stray voltage. Neutral isolation devices are installed, at the unities' expense when neutral to earth voltage in excess of 0.5 V are encountered. If less than 0.5 V are found, the utility may install an isolator; or voltages will be monitored for a sufficient period to ensure that voltage does not exceed the 0.5 V threshold.

6.4. Idaho

In March 2005 the Idaho Legislature passed the Stray Current and voltage Remediation Act requiring the Idaho Public Utilities Commission to promulgate stray voltage rules. The Idaho Public Utilities Commission (IPUC) has developed Stray voltage Rules composed of four Major Sections:

- Qualifications of persons analyzing stray voltage data
- Calibration and standards of recording equipment
- Six stray voltage tests and data collection forms
- Analyzing data and conducting remediation actions, if required

The IPUC has accepted the following definitions of Stray Current and voltage as:

a) Any steady state, sixty (60) hertz (Hz) (including harmonics thereof) root mean square (rms) alternating current (AC) less than twenty (20) mA through a five hundred (500) ohm resistor (i.e. shunt resistor) connected between cow contact points, as measured by a true rms meter; or

b) Any steady state, sixty (60) Hz (including harmonics thereof), rms AC voltage of less than ten (10) V, across (in parallel with) a five hundred (500) ohm resistor (i.e. shunt resistor) connected between cow contact points, as measured by a true rms meter.

c) Stray current and voltage is a normal, inherent and unavoidable result of electricity traveling through grounded electrical systems, including a dairy producer's on-farm system and a utility's distribution system. These systems are required by the National Electrical Code (NEC) and the National Electrical Safety Code (NESC) to be grounded to the earth to ensure safety and reliability.

d) Unless the context otherwise requires, the term stray voltage shall mean stray current or stray voltage.

6.5. Minnesota

The Minnesota PUC assembled a team of Science Advisors study farmers' claims that electric currents in the earth from electric distribution systems caused behavior, health, and production problems in cows

in Minnesota. The Science Advisors were a multidisciplinary group with expertise in the fields of agricultural engineering, animal physiology, biochemistry, electrical engineering, electrochemistry, epidemiology, physics, soil science and veterinary science. The Science Advisors to the Minnesota PUC issued its Final Report to the Minnesota PUC in July 1998. In its Final Report, the Science Advisors to the Minnesota PUC reached three conclusions:

1. We have not found credible scientific evidence to verify the specific claim that currents in the earth or associated electrical parameters such as voltages, magnetic fields and electric currents, are causes of poor health and milk production in dairy herds.
2. At the present time there is no basis for altering the PUC approved standards by which electric utilities distribute power onto or in the vicinity of individual dairy farms.
3. There are many well-documented non-electrical factors that are known and accepted by the scientific community, and by most farmers as well, to cause dairy cow health and production problems. Among the most noteworthy stressors are poor nutrition, poor cow comfort and hygiene, and low or no use of vaccinations and related preventive veterinary practices. Those who want to improve performance of dairy herds should always address these factors.

6.6. New York

The New York State Stray voltage Committee was formed in the early 1980's as a forum for utility risk management personnel to share information about existing or potential litigation on 'stray voltage' (28). New York investor owned utilities shared experiences, solutions and research funded by the Stray voltage Research Council. In 1993 efforts were directed to neutral isolation devices for cable television and underground telephone services due to the expansion of cable television into traditionally agricultural areas and electric utilities found itself at odds with cable and telephone policies on bonding and grounding. The expertise of Cornell University was requested to develop a standardized test procedure and to outline required tests and test methods and allow the utilities to formalize the procedures based on their internal work rules. At this time the Empire State Electric Energy Research Council also funded additional research on 'the effects of transients and multiple stresses on dairy cows'. The New York State Stray voltage Committee continues to disseminate information and work with Cornell University, local, state, and federal agencies on stray voltage issues so that problems can be avoided rather than perpetuated.

6.7. Pennsylvania

The Pennsylvania State University began a research project for the Pennsylvania Department of Agriculture (PDA) in February 2001 to examine stray voltage issues on PA dairy farms (161). Based on the initial project findings a second project proposal was funded in 2002 to develop an interdisciplinary approach to respond to farmers' stray voltage concerns. This study found that less than 10% of investigations found stray voltage levels high enough to affect cow behavior. The author notes that while the instances that stray voltage directly affects animal performance is infrequent, the resources that farmer and utilities spend chasing stray voltage are significant, and that misinformation and

misdiagnoses of stray voltage and its symptoms are expensive to both farmers and utilities. The following steps were recommended:

1. Establish a statewide stray voltage task for with representatives from utilities, state government, extension, farm organizations, veterinarians, equipment suppliers, nutritionists and other service providers.
2. Establish a standard protocol for stray voltage investigation.
3. Establish a minimum threshold for mitigation.
4. Public and private collaboration on a multidisciplinary response to stray voltage complaints.
5. Education.

The final conclusions of the stray voltage committee were that it is in the best interest of utilities and farmers to accurately diagnose and identify problems that can be associated with stray voltage. For utilities, repeat service calls, customer dissatisfaction and litigation can all be the result of an unhappy farmer. For farmers, believing that stray voltage is the issue when it is not is costly because it delays solving the real problem.

Bibliography

Albright, J. L., et al. (1991) Dairy farm analysis and solution of stray voltage problems. Agri Practice. 12(3)23-27

Aneshansley, D. J, et al. (1990) Complex electrical impedance of cows: measurement and significance. ASAE Annual International Meeting Technical Paper. No. 90-3509

Aneshansley, D. J., et al. (1992) Cow sensitivity to electricity during milking. Journal of Dairy Science 75(10)2733-2741

Aneshansley, D. J., et al. (1995) Holstein cow impedance from muzzle to front, rear and all hooves. ASAE Annual International Meeting Technical Paper. No. 95-3621.

Aneshansley, D. J., et al. (1997) Aversive Response of Dairy Cows to voltages/Currents on Waterers at Frequencies of 60 Hz and Above. ASAE Annual International Meeting Technical Paper. No. 97-3109

Aneshansley, D. J., et al. (1999) Sensitivity of Holsteins to 60 Hz and Other Waveforms Present on Dairy Farms. ASAE Annual International Meeting Technical Paper. No. 99-3152: 13.

Aneshansley, D. J. (2003). Stray voltage Research at Cornell University. NRAES: Stray voltage and Dairy Farms Conference Proceedings.

Appleman, R. D., et al. (1985) Source of stray voltage and effect on cow health and performance. Journal of Dairy Science 68(6): 1554-1567.

Appleman, R. D., et al. (1987) Production record analysis of dairy herd response to neutral isolation. ASAE Annual International Meeting Technical Paper: 12; 8 ref.

Bergsten, C, et al. (1992) The Cleanliness of Cows Tied in Stalls and the Health of Their Hooves as Influenced by the Use of Electric Trainers. Preventive Veterinary Medicine 13(4): 229-238, 17 ref.

Boandl, K. E., et al. (1989) Effects of Handling, Administration of a Local Anesthetic, and Electrical Dehorning on Plasma Cortisol in Holstein Calves. Journal of Dairy Science 72(8): 2193-7.

Bossut, D. F. B., et al. (1986) Electro acupuncture-induced analgesia in sheep: measurement of cutaneous pain thresholds and plasma concentrations of prolactin and beta-endorphin immunoreactivity. American Journal of Veterinary Research 47(3): 669-676.

Cavani, C., et al. (1994). Effects of electric fences on pasture utilization and productive performances in dairy ewes. Progressi scientifici e tecnologici in tema di patologia e di allevamento degli ovini e dei caprin. Societa Italiana di Patologia e di Allevamento degli Ovini e dei Caprini.

Cloud, H. A., et al. (1987) Stray voltage problems with dairy cows. NCR Extension publication 125.

Cook, M. A., eta l. (2003) Stray voltage Database Synopsis: Wisconsin's Experience with Stray voltage and its Mitigation. NRAES: Stray voltage and Dairy Farms Conference Proceedings.

Craine, L. B. (1975). Effects on mammals of grounded neutral voltage from distribution power lines. IEEE Rural Electric Power Conference.

Currence, H. D., et al. (1990) Dairy cow and human sensitivity to short duration 60 Hertz currents. Applied Engineering in Agriculture 6(3): 349-353; 11 ref.

Cutshaw, J. L., et al. (1990) Transcutaneous Electrical Nerve Stimulation of the Teat Does Not Activate Neuronal Pathways that Suppress Gonadotropin Release in Cows. Journal of Animal Science (abstract). 68(Suppl. 1)176.

Dewes, H. F., et al. (1989) The detection and measurement of stray electrical leakages on dairy farms: effects on performance. New Zealand Veterinary Journal 37(3): 117-121; 19 ref.

Dewes, H. F. (1997) Tech Report on stray voltage and effects on New Zealand farm dairies. Dairy Energy Programme, ECNZ, Hamilton, New Zealand.

Domanski, E., et al. (1992). The dynamics of beta-endorphin release by the hypothalamic nuclei and pituitary gland in sheep under physiological and stress condition. Experimental and Clinical Endocrinology 99(1): 39-44.

Domanski, E., et al. (1989). Effect of stress on the course of oestrous cycle and the release of luteinizing hormone; the role of endorphin in these processes. Acta Physiol Pol. 40(1): 64-73.

Domanski, E., et al. (1986). Differential Behavioural and Hormonal Responses to Two Different Stressors (Footshocking and Immobilization) in Sheep. Experimental and Clinical Endocrinology 88(2): 165-172.

Duvaux-Ponter, et al. (2005). Determination of a Stray voltage Threshold Leading To Aversion in Sheep. International Society for Applied Ethology.

Duvaux-Ponter, et al. (2006). It Is Possible To Define The Aversiveness Threshold Of Stray voltage When Animals Are Allowed To Avoid It. International Society for Applied Ethology.

Edmister, R. S. (2003). A Brief History of the New York State Stray voltage Committee. NRAES: Stray voltage and Dairy Farms Conference Proceedings.

Eriksen, S. (1984). Stray voltage in Danish stables. Laekstrom i danske stalde.: Laekstrom i danske stalde. Dansk Veterinaertidsskrift. 67: 1233-1236. ill.

Eyrich, H. and K. Zeeb (1989). Influence of the Cow Trainer on Oestrus in Dairy Cows. Kuratorium Fuer Technik Und Bauwesen in Der Landwirtschaft, KTBL Schrift.

Fick, R. J. and T. C. Surbrook (1996). A Review of Stray voltage Research. Extension Bulletin E-2606., Michigan Agricultural Electrical Council and Michigan State University Extension.

Godcharles, L., et al. (1993). Transient stray voltage: is it detrimental to growth performance, health status and welfare of market pigs? Veterinary Research Communications 17(1): 41-53; 26 ref.

Gorewit, R. C. and D. J. Aneshansley (1999). Effects of steady state voltages on mastitis. ASAE Annual International Meeting Technical Paper. no. 99-3151.

Gorewit, R. C. and D. J. Aneshansley (1997). Effects of Steady State voltages on Holstein Cows with Histories of Subclinical Mastitis. ASAE Annual International Meeting Technical Paper. no. 93-7110: 15.

Gorewit, R. C., et al. (1992b). Effects of voltages on cows over a complete lactation. 2. Health and reproduction. Journal of Dairy Science 75(10)2726-2732: 2726-2732; 5 ref.

Gorewit, R. C., et al. (1992a). Effects of voltages on cows over a complete lactation. 1. Milk yield and composition. Journal of Dairy Science 75(10): 2719-2725.

Gorewit, R. C., et al. (1989). AC voltages on water bowls: effects on lactating Holsteins. Journal of Dairy Science 72(8)2184-2192: 2184-2192; 22 ref.

Gorewit, R. C. and N. R. Scott (1986). Cardiovascular responses of cows given electrical current during milking. Journal of Dairy Science 69(4)1122-1127.(4): 1122-1127.

Gorewit, R. C., et al. (1985). Responses of dairy cows to alternating electrical current administered semi randomly in a non-avoidance environment. Journal of Dairy Science 68(3)718-725: 718-725, 8 ref.

Gorewit, R. C., et al. (1984). Effects of electrical current on milk production and animal health. ASAE Annual International Meeting Technical Paper. No. 84-3502: 20.

Graves, R. E. and T. H. Wilson (2002). Stray voltage Issues in Pennsylvania. ASAE Annual International Meeting Technical Paper. no. 02-3118.

Gregory, N. G. and S. B. Wotton (1994). Effect of Electrical Stunning Current on the Duration of Insensibility in Hens. British Poultry Science 35(3): 463-465.

Gumprich, P. S. (1992a). Stray voltage Effects on Dairy Cattle, New Liskeard College of Agricultural Technology.

Gumprich, P. S. (1992b). Stray voltage effects on dairy cattle. Highlights of Agricultural and Food Research in Ontario. 15(3): 20-24.

Gumprich, P. S. and L. Giesen (1993). Stray voltage effect on somatic cell count of dairy cows. NMC: National Mastitis Council, Proceedings.

Gustafson, R. J. (2003). Stray voltage Overview. NRAES: Stray voltage and Dairy Farms Conference Proceedings.

Gustafson, R. J., et al. (1986). Electrical Current Sensitivity of Growing/Finishing Swine for Drinking. Transactions of the ASAE 29(2) 592-596.

Gustafson, R. J., et al. (1985). Behavioral studies of dairy cow sensitivity to AC and DC electric currents. Transactions of the ASAE 28(5)(5): 1680-1685.

Gustafson, R. J., et al. (1983). Electrical resistance of milking system components. Transactions of the ASAE 26(4): 1218-1221.

Gustafson, R. J., et al. (1980). Neutral-to-earth voltages in dairy facilities: 2 case studies Effect on cows. ASAE Annual International Meeting Technical Paper: 19.

Gustafson, R. J., et al. (1988). Dairy cow sensitivity to short duration electrical currents. ASAE Annual International Meeting Technical Paper. no. 88-3522: 21.

Halvorson, D. A., et al. (1989). The effects of stray voltage on turkey poults. Avian Diseases 33(3): 582-585; 6 ref.

Hartsell, D., et al. (1994). The Effects of Ground Currents on Dairy Cows: A Case Study. Bovine Practitioner. 28: 21-28.

Hendrickson, R. C. and J. W. Patoch (1998a). AC earth current on dairy farms. ASAE Annual International Meeting Technical Paper. no. 98-3002: 18; 5 ref.

Hendrickson, R. C. and J. W. Patoch (1998b). Electrical environment on 17 dairy farms. ASAE Annual International Meeting Technical Paper. no. 98-3001: 12.

Hendrickson, S. R., et al. (1990). Occurrence of Neutral-to-Earth (N-E) voltage in the cow contact area and its relationship to milk production on randomly selected Wisconsin dairy farms: field survey. ASAE Annual International Meeting Technical Paper. no. 90-3507: 18.

Hendrickson, S. R., et al. (1991). Occurrence of Neutral-to-Earth voltage in the Cow Contact Area and Its Relationship to Milk Production on Randomly Selected Wisconsin Dairy Farms. NMC: National Mastitis Council, Proceedings.

Henke-Drenkard, D. V., et al. (1985). Milk production, health, behavior, and endocrine responses of cows exposed to electrical current during milking. Journal of Dairy Science 68(10)2694-2702

Heyde, H. v. d., et al. (1995). Electrical tensions on farrowing house equipment. Transactions of the ASAE 38(2): 611-615.

Hillman, D. (2003). Relationship of Electric Power Quality to Milk Production of Dairy Herds. ASAE Annual International Meeting Technical Paper. Paper No. 033116.

Hultgren, J. (1989). Cows and electricity: Biological interaction and effects on cow behaviour, health and production of stray voltage, electric cow-trainers and high-voltage transmission lines. Faculty of Veterinary Medicine, Department of Animal Hygiene, Swedish University 69.

Hultgren, J. (1990). Small electric currents affecting farm animals and man: a review with special reference to stray voltage. II. Physiological effects and the concept of stress. Veterinary Research Communications 14(4): 299-308.

Hultgren, J. (1991). A Preliminary Study of Behavioural Methods for Assessing the Influence of Electric Cow-Trainers on Animal Health. Veterinary Research Communications 15(4): 291-300.

Hultgren, J. (2001). Observational and Experimental Studies of the Influence of Housing Factors on the Behaviour and Health of Dairy Cows. Uppsala, Swedish University of Agricultural Sciences. Ph.D.

Kambic, H. E., et al. (1993). Influence of AC and DC Electrical Stimulation on Wound Healing in Pigs: A Biomechanical Analysis. Journal of Investigative Surgery 6(6): 535-543.

Kennedy, M. J., et al. (1995). A behavioural and physiological study of the responses of inexperienced gilts to electric fencing. 29th International Congress of the International Society for Applied Ethology Proceedings.

Kirk, J. H., et al. (1984). Stray voltage on Michigan dairy farms. Journal of the American Veterinary Medical Association 185(4): 426-428; 7 ref.

Klastrup, O. and J. F. Agger (1984). Stray voltage (laekstrom). [in cowsheds]. Dansk Veterinaertidsskrift. 67: 1228-1232. ill.

Kuchel, T. R. (1990). Physiological and Biochemical Consequences of Electro-immobilisation in Conscious Sheep. Australian Veterinary Journal 67(2): 33-38.

Lee, C., Prayaga, K., Reed, M., Henshall, J. (2007). Methods of training cattle to avoid a location using electrical cues. Applied Animal Behaviour Science 108(3-4): 11.

Lefcourt, A. M. (1982). Behavioral responses of dairy cows subjected to Controlled voltages. Journal of Dairy Science 65(4)672-674: 672-674.

Lefcourt, A. M. (1991). Effects of electrical voltage/current on farm animals. How to detect and remedy problems. USDA Handbook 696, U.S. Dept. of Agriculture, Washington, D.C., USA.

Lefcourt, A. M. and R. M. Akers (1982). Endocrine responses of cows subjected to controlled voltages during milking. Journal of Dairy Science (abstract). 65, Suppl. 1: 177.

Lefcourt, A. M., et al. (1985). Effects of intermittent electrical shock on responses related to milk ejection. Journal of Dairy Science 68(2)391-401(2): 391-401; 39 ref.

Lefcourt, A. M., et al. (1986). Correlation of Indices of Stress with Intensity of Electrical Shock for Cows. Journal of Dairy Science 69(3)833-842.: 833-842.

LeMire, S. D., et al. (1997). Dairy Cattle Drinking Behavior and Stray voltage Exposure. ASAE Annual International Meeting Technical Paper. no. 97-4012: 10.

Malven, P. V., et al. (1984). Effects of naloxone and electroacupuncture treatment on plasma concentrates of LH [luteinizing hormone] in sheep. Journal of Endocrinology 101(1)75-80: 75-80.

Martin, M. J. D., et al. (1989). Electric Shock Conditioning of Sheep to Avoid Feed Supplement Troughs in Field Investigations of Diet Supplementation. Australian Rangeland Journal 11(1): 44-46.

Matte, J. J., et al. (1992). Factors affecting the electrical impedance of growing-finishing pigs. Canadian Agricultural Engineering 34(2): 189-193; 18 ref.

Matte, J. J., et al. (1992). Stray voltage: Factors Affecting the Current Perceived by Growing Finishing Pigs. Journal of Animal Science 70 Suppl. 2: 170, Abstract 134.

McFarlane, J. M. and S. E. Curtis (1988). Research Notes: System for Exposing Chicks to Experimental Intermittent Electric Shock. Poultry Science 67(12): 1791-1793.

McFarlane, J. M., et al. (1989). Multiple Concurrent Stressors in Chicks: 1. Effect on Weight Gain, Feed Intake and Behavior. Poultry Science 68(4): 501-509.

Morris, J. P. et al. (1997). Pain-related cerebral potentials in response to acute painful electrical stimulation in sheep. Australian Veterinary Journal 75(12): 883-886; 12 ref.

Moyes, K. M. et al., (2008). Gene expression networks in bovine mammary tissue during a s. uberis intramammary infection challenge. Paper presented at the 2008 Annual meeting of the NMC.

MPSC (2006). In the matter, on the Commission's own motion to consider the implementation of standards or other remedial measures relating to stray voltage. Michigan Public Service Commission.

MPUC (1998). Final Report of the Science Advisors to the Minnesota Public Utilities Commission: Research Findings and Recommendations Regarding Claims of Possible Effects of Currents in the Earth on Dairy Cow Health and Milk Production. July 31,1998. Minnesota Public Utilities Commission.

Norell, R. J., et al. (1983). Behavioral studies of dairy cattle sensitivity to electrical currents. Transactions of the ASAE 26(5): 1506-1511. ill.

Pascoe, P. J. and W. N. McDonell (1986). The noxious effects of electro-immobilization in adult Holstein cows: a pilot study. Canadian Journal of Veterinary Research 50(2): 275-279.

Pehrson, B. (1992). The ban on the Use of Cow Trainers Must be Lifted for the Benefit of the Animals. Svensk Veterinartidning 44(15): 653-655, 5 ref.

Phillips, D. S. M. (1962). Production of Cows May Be Affected by Small Electric Shocks From Milking Plants. New Zealand Journal of Agriculture 105: 221-25.

Polk, C. (2001). Cows, Ground Surface Potentials and Earth Resistivity. Bioelectromagnetics 22(1)7-18: 7-18.

Przekop, F., et al. (1984). The Effect of Prolonged Stress on the Oestrous Cycles and Prolactin Secretion in Sheep. Animal Reproduction Science 7(4): 333-342.

Przekop, F., et al. (1990). Suppressive effect of beta-endorphin and naloxone on the secretion of cortisol under stress conditions in sheep. Exp Clin Endocrinol 95(2): 7.

Przekop, F., et al. (1985). Changes in circadian rhythm and suppression of the plasma cortisol level after prolonged stress in the sheep. Acta Endocrinol (Copenh) 110(4): 6.

PSCW (1989). Investigation on the Commission's Own Motion Into the Practices, Policies and Procedures concerning Stray voltage for Electric Distribution Utilities in Wisconsin: 75.

PSCW (1996). Findings of Fact, Conclusion of Law, and Order 05-E1-115. PSCW Staff Report, Public Service Commission of Wisconsin. PSCW (2006). Electricity and You, Public Service Commission of Wisconsin.

PSCW (2007). Stray voltage Data Update: The Latest Statistics from the PSCW Database. P. S. C. o. Wisconsin.

Quigley, T. M., et al. (1990). Livestock control with electrical and audio stimulation. Rangelands 12(3): 152-155.

Reilly, J. P. (1994). Transient current effects in stray voltage exposure: biophysical principles and mechanisms. ASAE Annual International Meeting Technical Paper. no. 94-3594: 21.

Reilly, J. P. (1998). Applied Bioelectricity: from Electrical Stimulation to Electropathology. 563.

Reinemann, D. J., et al. (2005). Water, Feed and Milk Production Response of Dairy Cattle Exposed to Transient Currents. Transactions of the ASAE 48(2).

Reinemann, D. J., et al. (2004). Comparison of Dairy Cow Aversion to Continuous and Intermittent Current. Transactions of the ASAE 47(4): 1257-1260.

Reinemann, D. J., et al. (2003a). Milking Performance of Dairy Cows Subjected to Electrical Current and Induced Milking Machine Problems. Transactions of the ASAE 45(3): 833-838.

Reinemann, D. J., et al. (2003b). Sensitivity Testing Results: EPRI PEAC Sponsored Pulsed Current Impact Assessment Tests, University of Wisconsin-Madison.

Reinemann, D. J., et al. (2003c). Comparison of Behavioral and Physiological Response of Cows Exposed to Electric Shock. Transactions of the ASAE 46(2): 507-512.

Reinemann, D. J., et al. (1999a). Immune Function Response to Low-Level Electrical Current Exposure, Part III. Dairy Cow Response to Electrical Environment: Final Report to the Minnesota Public Utilities Commission.

Reinemann, D. J., et al. (1999b). Dairy cow sensitivity to short duration electrical currents. Transactions of the ASAE 42(1): 215-222

Reinemann, D. J., et al. (1996). Dairy Cow Sensitivity and Aversion to Short Duration Transient Currents. ASAE Annual International Meeting Technical Paper. no. 96-3087.

Reinemann, D. J., et al. (1995a). Response of Dairy Cattle to Transient voltages and Magnetic Fields. IEEE Transactions on Industry Applications, 4: 708.

Reinemann, D. J., et al. (1995b). Water, Feed and Milk Production Response of Dairy Cattle Exposed to Transient Currents. ASAE Annual International Meeting Technical Paper. no. 95-3276.

Reines, R. S., M. A. Cook, et al. (1998). Putting stray voltage in perspective: the Wisconsin experience revisited. ASAE Annual International Meeting Technical Paper. no. 98-3004: 15; 4 ref.

Rigalma, K., et al. (2007). Influence Of An Unpredictable Stressor On Behavioural And Physiological Responses Of Experienced Or Naïve Holstein Heifers. International Society for Applied Ethology.

Rigalma, K., et al. (2008). Influence of predictability and past experience on behavioural and physiological responses to stray voltage in Holstein heifers [Influence de la prévisibilité et de l'expérience sur les réponses comportementales et physiologiques de génisses Holstein à l'application d'une tension électrique parasite]. Rencontres Recherches Ruminants, No. 14.

Robert, S., et al. (1991). Effects of continuous stray voltage on health, growth, and welfare of fattening pigs. Canadian Journal of Veterinary Research 55(4): 371-376, 22 ref.

Robert, S., et al. (1992). Stray voltage: its influence on swine production during the fattening period. Canadian Journal of Animal Science 72(3): 467-475; 26 ref.

Robert, S., et al. (1994). Stray voltage: effects of voltage frequency, floor materials and wetness on electric currents through swine. Canadian Agricultural Engineering 36(1): 37-43; 19 ref.

Robert, S., et al. (1996). Sensitivity of reproducing sows and suckling pigs to stray voltage. American Journal of Veterinary Research 57(8): 1245-1249; 21 ref.

Roberts, J. R. and M. A. Cook (2003). Stray voltage Education; A Veterinarian's Perspective. NRAES: Stray voltage and Dairy Farms Conference Proceedings.

Roberts, J. R., et al. (2003). Stray voltage and Water for Dairy Cattle. PSCW Staff Report, Public Service Commission of Wisconsin.

Rodenburg, J. (1984). Tingle voltage: The Results of a Recent Study of 140 Ontario Dairy Farms. Ontario Milk Producer. July.

Roussel, S., et al. (2007). Determination of a Stray voltage Threshold using Behavioral Measurements in Holstein Heifers. International Society for Applied Ethology.

Rushen, J. (1986). Aversion of Sheep to Electro-Immobilization and Physical Restraint. Applied Animal Behaviour Science 15(4): 315-324.

Rushen, J. (1991). Problems Associated With the Interpretation of Physiological Data in the Assessment of Animal Welfare. Applied Animal Behaviour Science 28(4): 381-86.

Rushen, J. (1995). An Overview of Farm Animal Behaviour and its Applications. Animal Science Research and Development: Moving Toward a New Century, M. Ivan (Ed.).

Scruton, D. L. (2003). Stray voltage - The Vermont Experience. NRAES: Stray voltage and Dairy Farms Conference Proceedings.

Sein, O. B. (1994). Induction of Pubescence in Swine with the Using of Transcranial Electrostimulation [Transkranial Naya Ehlektrostimulyatsiya Polovoj Zrelosti u Svinok]. Veterinariya: 34-37, 12 ref.

Sheffield, L.G. (2003) Impact of Low AC Currents on Immune Function of Dairy Cattle. Draft report to the Wisconsin Legislature.

Sheldon, L. E. (1988). Experiences of an Independent Consultant Concerning Electric Fencing. ASAE Annual International Meeting Technical Paper. no. 88-6506.

Simensen, E., et al. (1988). Effect of the Cow-Trainer on Cleanliness, Behaviour and Plasma Cortisol Levels in Dairy Cows. Environment and Animal Health: Proceedings of the VIth International Congresson Animal Hygiene.

Southwick, L. H., et al. (1989). Association between neutral-to-earth and cow contact voltage on New York dairy farms. Journal of Dairy Science 72(9): 2417-2420; 21 ref.

Southwick, L. H., et al. (1992). Milk production, water consumption, and somatic cell count responses of cows subject to one or two V of alternating current. Journal of the American Veterinary Medical Association 201(3)441-444(3): 441-444; 12 ref.

Staehle, R. W., et al. (1998). Research Findings and Recommendations Regarding Claims of Possible Effects of Currents in the Earth on Dairy Cow Health and Milk Production: Final report of the science advisors to the Minnesota Public Utilities Commission.

Stanek, D. E. (1988). Stray voltage and animal behavior. ASAE Annual International Meeting Technical Paper. no. 88-3521: 22.

Stanek, D. E. and M. E. Monson (1991). Animal sensitivity to low voltage/current levels. ASAE Annual International Meeting Technical Paper. no. 91-4557: 10.

Stetson, L. E. (2003). Minnesota Science Advisors Findings on the Effects of Ground Current on the Health and Productivity of Dairy Cows. NRAES: Stray voltage and Dairy Farms Conference Proceedings.

Stringfellow, M. F. (2003). The Bad Science of Stray voltage. NRAES: Stray voltage and Dairy Farms Conference Proceedings.

Thornton, E. (1984). A Study of stray voltages on Alberta Dairy Farms. ASAE Annual International Meeting Technical Paper. no. NR-84-309.

Vidali, G., et al. (1995). Effects of normal sinusoidal electrical voltage and impulses on the behavior and performance of laying hens. Canadian Journal of Animal Science 75(3): 291-296.

Vidali, G., et al. (1996). Effects of chopped sinusoidal voltages on the behavior and performance of laying hens. Canadian Agricultural Engineering 38(2): 99-105; 15 ref.

Villeneuve, P. (1990). Does Stray voltage Affect Egg Production?

White, S. S., et al. (1985). Use of electro-acupuncture as an analgesic for laparotomies in two dairy cows. Australian Veterinary Journal 62(2)(2): 52-54. ill.

Whittlestone, W. G., et al. (1975). Electric shocks during machine milking. New Zealand Veterinary Journal 23(6): 105-108.

Wilcox, G. C. and H. C. Jordon (1986). Stray voltage Affects Performance of Cage layers: A field Observation. Poultry Science (abstract). 65 Suppl. 1: 144.

Wilson, D. J. and L. H. Southwick (2003). Cow Contact Current on Feeders and Milk Production Loss on a Dairy Farm: A Case Report. NRAES: Stray voltage and Dairy Farms Conference Proceedings.

Wilson, T. H. (2003). Pennsylvania's Stray voltage Perspective. NRAES: Stray voltage and Dairy Farms Conference Proceedings.

Winter, D. F. and W. K. Dick (1984). Field experience with the electronic grounding system for stray voltage reduction. ASAE Annual International Meeting Technical Paper. no. 84-3503: 13.

Wohlt, J. E., et al. (1994). Cortisol Increases in Plasma of Holstein Heifer Calves, from Handling and Method of Electrical Dehorning. Journal of Dairy Science 77(12): 3725-3729.

Woolford, M. W. (1972). Small voltage in milking plants. 2nd Seminar on Farm Machinery and Equipment Proceedings.

Worley, J. W. and J. L. Wilson (2000a). Effects of stray voltage on laying habits of broiler breeders. Applied Engineering in Agriculture 16(6): 723-729; 11 ref.

Worley, J. W. and J. L. Wilson (2000b). Influence of stray voltage on breeder hens: a field study. ASAE Annual International Meeting Technical Paper. no. 00-4129: 12.

Worley, J. W. and J. L. Wilson (2001). Analysis of stray voltage on broiler breeder farms. Journal of Applied Poultry Research 10(4): 394-403.

Ziecik, A. J., et al. (1993). Effect of Electrical Stress Stimuli on Lutenizing Hormone, Prolactin and Cortisol Secretion in Pigs. Investigacion Agraria Produccion y Sanidad Animales 8(3)269-280.

Stray Voltage

Causes of Stray Voltage

Stray voltage and its impacts on livestock and other confined animals have been studied in detail by state and federal agencies, universities, electric utilities, and numerous scientists since the late 1970s. The PSCW has opened investigations, encouraged the upgrade of rural distribution systems, established measurement protocols, and compiled a stray voltage database to track investigations, all in order to develop successful strategies for minimizing stray voltage in farm operations (http://psc.wi.gov/utilityInfo/electric/strayVoltage.htm). Over the decades, significant resources have been allocated to understand this issue.

Electrical systems, including farm systems and utility distribution systems, are grounded to the earth to ensure safety and reliability, as required by the National Electrical Safety Code and the National Electrical Code. Because of this, some current flows through the earth at each point where the electrical system is grounded and a small voltage develops. This voltage is called neutral-to-earth voltage (NEV). When NEV is measured between two objects that are simultaneously contacted by an animal, a current will flow through the animal and it is considered stray voltage. Animals may then receive a mild electrical shock that can cause a behavioral response. At low voltages, an animal may flinch with no other noticeable effect. At higher levels, avoidance or other negative behaviors may result. Stray voltage may not be noticeable to humans.

Low levels of alternating current (AC) voltage on the grounded conductors of a farm wiring system are a normal and unavoidable consequence of operating electrical farm equipment. In other words some levels of stray voltage will always be found on a farm. For example, a dairy cow may feel a small electric shock when it makes contact with an energized water trough. The issue of concern is stray voltage that occurs at a level that negatively affects an animal's behavior, health, and more specifically, milk production.

Stray voltage can be caused by a combination of on-farm and off-farm causes. One off-farm contributor to stray voltage is the operation of transmission lines in close proximity and parallel to a distribution line. As a means to minimize new transmission line impacts, new lines are often co-located near a distribution ROW or the distribution line is underbuilt on the new transmission poles. This configuration can contribute to stray voltage issues. To minimize the likelihood of stray voltage occurrences, utilities sometimes propose to relocate these paralleling distribution lines further away from the transmission line and/or burying the distribution line underground. Additionally, the PSCW may require the utility to conduct pre-construction and post-construction testing of potentially impacted farms and lines.

Potential Impacts of Stray Voltage

Herd problems can be difficult to diagnose. There are many factors to consider such as the herd's environment, diet, and health. Dairy cow behaviors that may indicate the presence of stray voltage include nervousness at milking time, increased milking time, decreased milk production, increased Somatic Cell Count, increased defecation or urination during milking, hesitation in approaching waterers or feeders, a reluctance to enter the barn or milking parlor, or an eagerness to leave the barn. Some of these symptoms are interrelated. For example, a dairy cow that does not drink sufficient water due to shocks may have decreased milk production. However, these same symptoms can be caused by other factors that are unrelated to stray voltage such as increased mastitis or milk-withholding problems for farms with milking parlors or in barns with milk pipelines. If stray voltage is suspected to be the cause of herd problems, the farm should be tested.

In 1996, the PSCW established a stray voltage "level of concern" of 2 milliamps (PSCW docket 05-EI-115). The level of concern is not intended as a "damage" level but as a very conservative, below-the-injury level, below the point where moderate avoidance behavior is likely to occur, and well below where a cow's behavior or milk production would be affected. The PSCW and DATCP consider that at this level of current, some form of mitigative action should be taken on the farmer's behalf.

The level of concern is further defined with respect to how it should be reduced. If a utility distribution system contributes one milliamp or more to stray voltage on a farm, the utility must take corrective action to reduce its contribution to below the one milliamp level. If the farm electrical system contributes more than one milliamp, the farmer may want to consider taking corrective measures to reduce the level below one milliamp.

Mitigation of Stray Voltage

When stray voltage is a concern, electrical measurement in confined livestock areas should be done using the established PSCW-approved testing procedures with appropriate equipment. These testing protocols have been developed to collect a reasonable set of data useful in the analysis of the quantity and quality of stray voltage that may be present under a variety of conditions, and the source (including on-farm versus off-farm sources) of such stray voltage.

Field research shows that cow contact current is often dependent on both on- and off-farm electrical power systems. A common on-farm source of stray voltage is the inappropriate interconnection of equipment grounding conductors with the neutral conductors of the farm wiring system. Mitigation of stray voltage can be achieved through a variety of proven and acceptable methods, such as additional grounding or the installation of an equipotential plane.

Farm operators may receive additional technical assistance from the Wisconsin Rural Electric Power Services (REPS) program (as defined and authorized by Wis. Stat. §§ 93.41 and 196.857). The REPS program is jointly managed by the PSCW and DATCP. DATCP (http://datcp.wi.gov/Farms/Wisconsin_Farm_Center/Farm_Rewiring/Stray_Voltage/index.aspx) provides an ombudsman, veterinarian, an energy technical advisor, and a program assistant to the REPS program. REPS staff provides information about stray voltage and power quality issues; work to answer regulatory questions; conduct on-farm and distribution system investigations that can assist farmers in working with the utility or electrician to resolve a power quality concern; provide a format for dispute resolution; and continue to research electrical issues. REPS staff also works with farmers, their veterinarians and nutritionists to resolve herd health and production problems.

Water Resources

Potential Impacts to Surface Waters

Waterways in the form of creeks, streams, rivers, and lakes are abundant throughout Wisconsin. Many of these waters have been designated as special resources that have state, regional, or national significance. Construction and operation of a transmission line across these resources may have both short-term and long-term effects. The type and significance of the impact is dependent on the characteristics of the water resource and the transmission line design. Waterway use, physical features such as channel width, herbaceous plant cover, and water quality, recreational use, and the scenic quality of the river and its surrounding landscape are important factors in assessing potential impacts.

Appendix M

MPCA What's In My Neighborhood Sites

Table M-1 MPCA's "What's in my Neighborhood Listed Sites in the Proposed Project Area

County	MPCA Site Name	Type	Status	Description	Nearest Project Route	Section	Approximate Distance to Centerline (feet)
Roseau	U.S. Customs Building	Leak Site	Inactive	Fuel Oil 1 & 2 release Site closure: June 2001 No offsite contamination	Border Crossing Hwy 310 Variation in Border Crossing Variation Area	West	400
	Mende Auto Body & Muffler	Haz Waste Site	Active	Small to Minimal Quantity Generator	Proposed Blue/Orange Route in the Roseau Lake WMA Variation Area	West	1,735
	Ray Horner Farm	Feedlot	Active	Registered feedlot with 10 or more animal units (AU)	Proposed Blue/Orange Route in the Roseau Lake WMA Variation Area	West	1,720
	Knudson Brothers Farm Inc	Tank Site	Inactive	Tank Data not available	Cedar Bend WMA Variation in the Cedar Bend Variation Area	West	660
	Quentin Grittner Farm	Feedlot	Active	Registered feedlot with 10 or more animal units (AU)	Roseau Lake WMA Variation 1 in the Roseau Lake WMA Variation Area	West	1,285
	Skoglund Farm	Feedlot	Active	Registered feedlot with 10 or more animal units (AU)	Roseau Lake WMA Variation 1 in the Roseau Lake WMA Variation Area	West	476
	Nelson Residence	Leak Site	Inactive	Petroleum tank release. Site closure: May 2013	Roseau Lake WMA Variation 1 in the Roseau Lake WMA Variation Area	West	1,900
	Harvey Johnson Farm	Feedlot	Active	Registered feedlot with 10 or more animal units (AU)	Border Crossing 500kV Variation in the Border Crossing Variation Area	West	2,094
Lake of the Woods	Williams Dump Site	Investigation and Cleanup	Inactive	State Assessment Site Unpermitted Dump Site closure: June 1978	Beltrami North Central Variation 4 in the Beltrami North Central Variation Area	West	116
	Calvin Carson Farm	Feedlot	Active	Registered feedlot with 10 or more animal units (AU)	Beltrami North Central Variation 4 in the Beltrami North Central Variation Area	West	1,226

Table M-1 MPCA's "What's in my Neighborhood Listed Sites in the Proposed Project Area

County	MPCA Site Name	Type	Status	Description	Nearest Project Route	Section	Approximate Distance to Centerline (feet)
Lake of the Woods	Northstar Electric Cooperative	Haz Waste Site	Active	Small to Minimal Quantity Generator	Proposed Blue Route in the Pine Island Variation Area	Central	812
	MNDOT Truck Station	Leak Site (1504)	Inactive	Gasoline release. Groundwater cont. Closure date: 09/26/1995 Remaining soil contamination Offsite contamination unknown	Proposed Blue Route in the Pine Island Variation Area	Central	812
	Petal Pushers	Leak Site	Inactive	Diesel; Gasoline Leaded Release. Closure date: 02/23/2001 Remaining soil contamination Offsite contamination unknown	Proposed Blue Route in the Pine Island Variation Area	Central	812
Koochiching	Northome Modified Sanitary Landfill	Investigation and Cleanup	Active	State Assessment Site SA 7935 (Active) Unpermitted Dump Site REM04735 (Inactive)	J2 Segment Option Variation in the J2 Variation Area	Central	680
	Northome Modified Sanitary Landfill	Solid Waste	Inactive	Landfill Closed (SW-225). Owned by MPCA. Groundwater Monitoring Data.	J2 Segment Option Variation in the J2 Variation Area	Central	680
	Northome Modified Sanitary Landfill	Industrial Stormwater Permit	Inactive	Industrial SW Permit Termination: 03/17/2000	J2 Segment Option Variation in the J2 Variation Area	Central	680
Koochiching	Northome Modified Sanitary Landfill	Industrial Stormwater Permit	Active	ISW No Exposure Exclusion. Effective Start: 12/15/2010	J2 Segment Option Variation in the J2 Variation Area	Central	680

Table M-1 MPCA's "What's in my Neighborhood Listed Sites in the Proposed Project Area

County	MPCA Site Name	Type	Status	Description	Nearest Project Route	Section	Approximate Distance to Centerline (feet)
	Loman Dump	Investigation and Cleanup	Active	State Assessment Site SA 7925 (Active) Unpermitted Dump Site REM04478 (Inactive)	J2 Segment Option Variation in the J2 Variation Area	Central	62
Itasca	Balsam Lake II Dump	Investigation and Cleanup	Active	State Assessment Site SA 7858 (Active)Unpermitted Dump Site REM03558 (Inactive)	Proposed Orange Route in the Balsam Variation Area	East	530
	Balsam Store	Tank Site	Inactive	Last site inspection: 05/05/2014 Field Citation MPCA - Closure date: 07/15/14	Proposed Orange Route in the Balsam Variation Area	East	1,710
	Former Balsam Store	Leak Site	Inactive	Diesel; Gasoline, Unleaded release Site Closure: 09/12/2014 Contaminated Soils Remaining Offsite Contamination	Proposed Orange Route in the Balsam Variation Area	East	2,012
	Former Balsam Store	Tank Site	Inactive	Last tank removal: 11/16/1998 Last site inspection: 04/08/1999	Proposed Orange Route in the Balsam Variation Area	East	2,012
	Rhunde Media	Leak Site	Inactive	Fuel Oil 1 & 2; Gasoline release. Site closure: 12/31/1997 Unknown soil and offsite contamination	Proposed Blue/Orange Route near Taconite	East	2,078
Itasca	Bray Lake Outlying Canister	Solid Waste	Active	Permit-by-Rule landfill. Facility permit: 10/24/2010 Inspection: 09/24/2010	Proposed Blue Route in the Balsam Variation Area	East	1,312

Table M-1 MPCA's "What's in my Neighborhood Listed Sites in the Proposed Project Area

County	MPCA Site Name	Type	Status	Description	Nearest Project Route	Section	Approximate Distance to Centerline (feet)
	Bray Lake Demolition & Disposal	Solid Waste	Active	Open Landfill. Facility permit: 08/06/2008 Last routine inspection: 07/17/12	Proposed Blue Route in the Balsam Variation Area	East	1,600
	MNDOT District 1b Deer Lake	Haz Waste Site	Active	Small to Minimal Quantity Generator	Proposed Blue Route in the Pine Island Variation Area	Central	775
	Wamp Lake Dump	Investigation and Cleanup	Inactive	State Assessment Site SA 7862 (Inactive) Unpermitted Dump Site REM05349 (Inactive)	Effie Variation in the Effie Variation Area	East	1,834
	Reckinger Solid Waste Site	Solid Waste	Inactive	Permit-by-Rule landfill.	East Bear Lake Variation in the East Bear Lake Variation Area	East	1,710
	Balsam Elementary School	Leak Site	Inactive	Fuel Oil 1 & 2 release. Site closure: 01/02/2004 Contaminated Soils Remaining	Balsam Variation in the Balsam Variation Area	East	610
	Iron Range Sanitary Landfill	Investigation and Cleanup	Active	State Assessment Site SA 7864 (Active) Unpermitted Dump Site REM04283 (Inactive)	Balsam Variation in the Balsam Variation Area	East	2,074
	Iron Range Sanitary Landfill	Solid Waste	Inactive	Landfill Closed . Owned by MPCA. Groundwater Monitoring Data (EDA - 2764).	Balsam Variation in the Balsam Variation Area	East	2,074
Itasca	Iron Range Sanitary Landfill	Industrial Stormwater Permit	Active	ISW No Exposure Exclusion. Effective Start: 12/15/2010	Balsam Variation in the Balsam Variation Area	East	2,074

Source: Minnesota Pollution Control Agency 2015.