US Army Corps of Engineers
Sacramento District

Symbol	Description	Date	Approved

Designed by:		Date:	Rev.
Dwn by:	Spec No.:	Design file no:	
Reviewed by:		Drawing Code:	
Submitted by:		File name:	
CHIEF, CIV ENGR DES SEC A		Plot date:	
		Plot scale:	

DEPARTMENT OF THE ARMY
CORPS OF ENGINEERS
SACRAMENTO, CALIFORNIA

SACRAMENTO DISTRICT
IN-HOUSE DESIGN
1325 'J' STREET
SACRAMENTO, CA 95814-2922

WEST SACRAMENTO COUNTY CA

WEST SACRAMENTO AREA FLOOD CONTROL AGENCY FLOOD RISK REDUCTION PROJECTS

SOUTH CROSS LEVEE OVERVIEW

Sheet reference number:

PLATE 01

NOTE:
THE EXISTING FENCE INSIDE THE LEVEE FOOTPRINT WILL BE REMOVED.

SOUTH CROSS LEVEE PLAN VIEW

200' 100' 0 200'

1"=200'

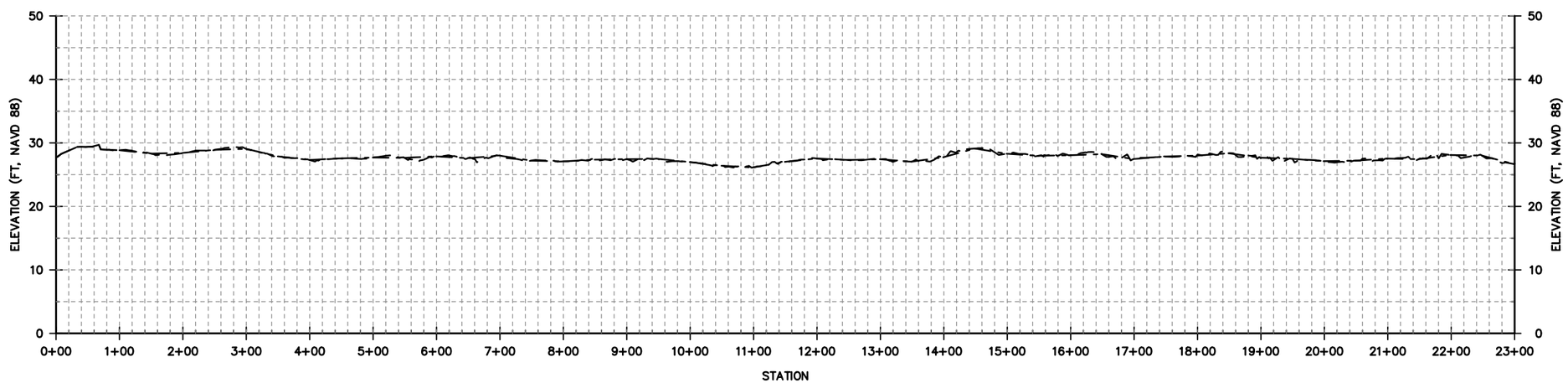

SOUTH CROSS LEVEE (ALT 5)

NOT FOR CONSTRUCTION

US Army Corps of Engineers
Sacramento District

Symbol	Description	Date Approved

Designed by:
Dwn by:
Spec No.:
Reviewed by:
Submitted by:
CHIEF, CIV ENGR DES SEC A
Date:
Rev.
Design file no:
Drawing Code:
File name:
Plot date:
Plot scale:

DEPARTMENT OF THE ARMY
CORPS OF ENGINEERS
SACRAMENTO, CALIFORNIA

SACRAMENTO DISTRICT
IN-HOUSE DESIGN
1325 'J' STREET
SACRAMENTO, CA 95814-2922

WEST SACRAMENTO COUNTY CA

WEST SACRAMENTO AREA FLOOD CONTROL AGENCY FLOOD RISK REDUCTION PROJECTS

SOUTH CROSS LEVEE (ALT 5)
PLAN AND PROFILE

Sheet reference number:
PLATE 02

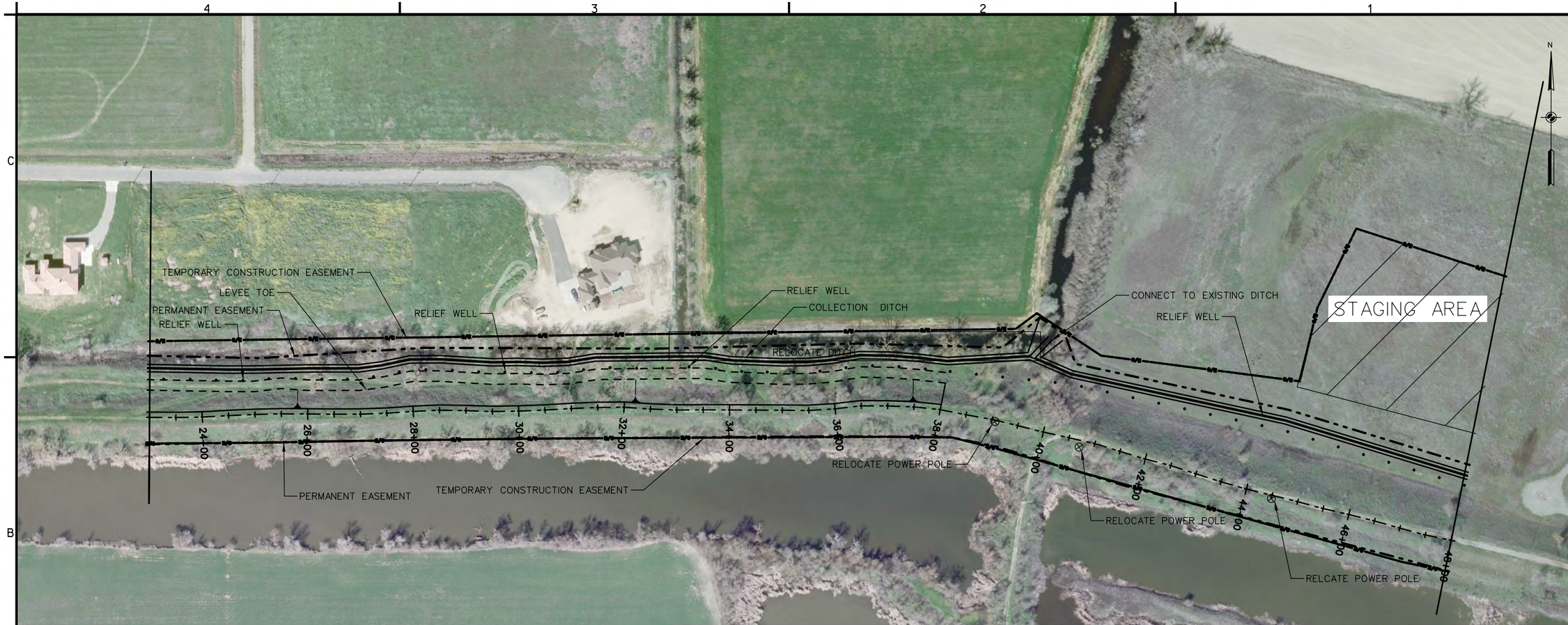

SOUTH CROSS LEVEE PLAN VIEW

200' 100' 0 200'

1"=200'

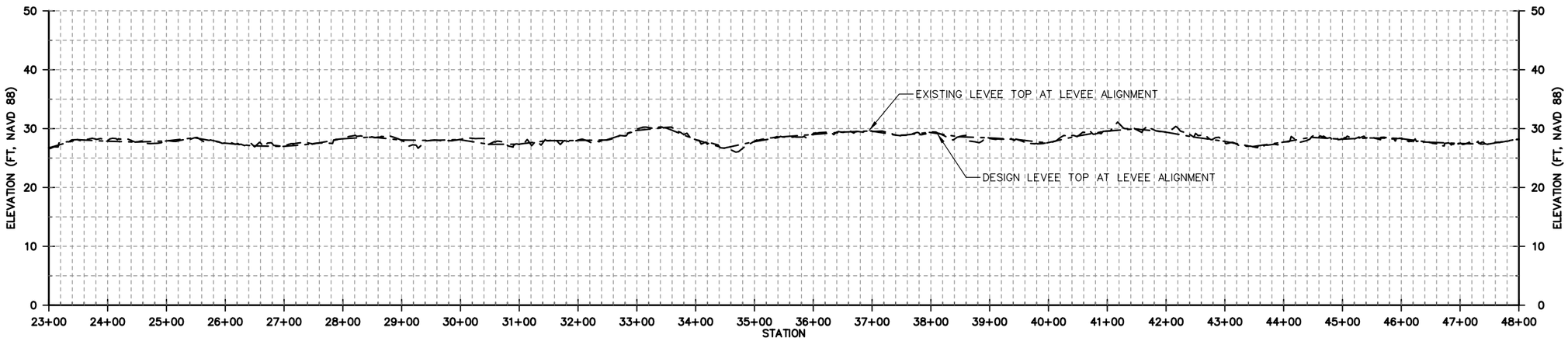

SOUTH CROSS LEVEE PROFILE (ALT 5)

NOT FOR CONSTRUCTION

US Army Corps of Engineers
Sacramento District

Symbol	Description	Date Approved

Designed by:
Dwn by: Spec No.:
Reviewed by:
Submitted by:
CHIEF, CIV ENGR DES SEC A
Date:
Rev.
Design file no:
Drawing Code:
File name:
Plot date:
Plot scale:

DEPARTMENT OF THE ARMY
CORPS OF ENGINEERS
SACRAMENTO, CALIFORNIA

SACRAMENTO DISTRICT
IN-HOUSE DESIGN
1325 "J" STREET
SACRAMENTO, CA 95814-2922

WEST SACRAMENTO COUNTY CA

WEST SACRAMENTO AREA FLOOD CONTROL AGENCY FLOOD RISK REDUCTION PROJECTS

SOUTH CROSS LEVEE (ALT 5)
PLAN AND PROFILE

Sheet reference number:
PLATE 03

8.1.2 PLOT DATE: 20-NOV-2015 PLOT TIME: 15:12 C:\Users\L2EDDBYL\Desktop\West_Sac_GRR\South_Cross_Levee\Cad\HQ_10302015\Plate3_P&P.dgn

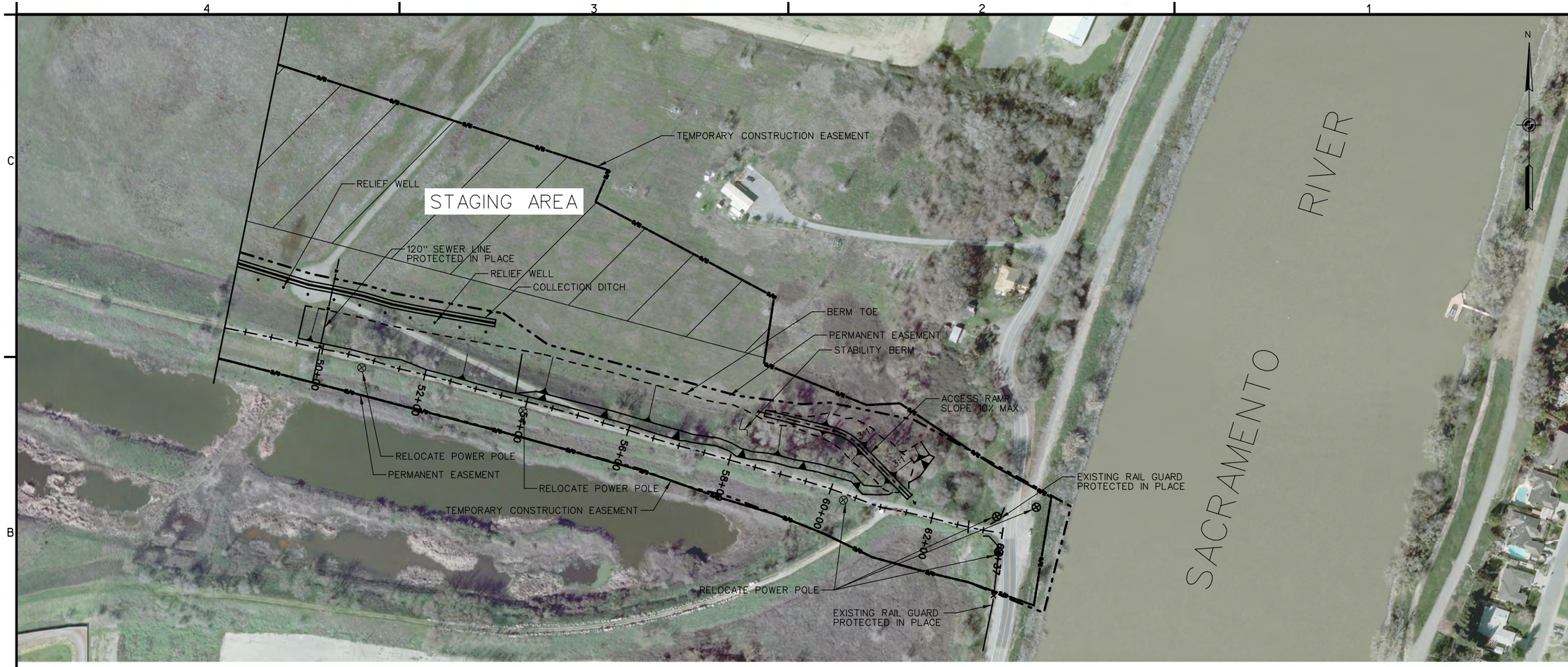

SOUTH CROSS LEVEE PLAN VIEW

200' 100' 0 200

1"=200'

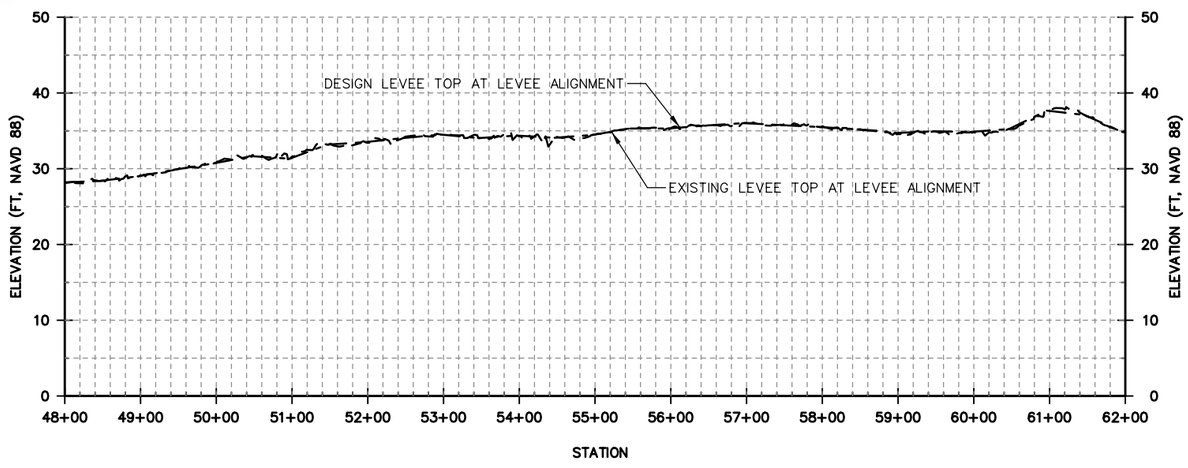

SOUTH CROSS LEVEE PROFILE (ALT 5)

NOT FOR CONSTRUCTION

US Army Corps of Engineers®
Sacramento District

Symbol	Description	Date	Approved

Designed by:
Dwn by:
Spec No.:
Reviewed by:
Submitted by:
CHIEF, CIV ENGR DES SEC A
Date:
Rev.
Design file no:
Drawing Code:
File name:
Plot date:
Plot scale:

DEPARTMENT OF THE ARMY
CORPS OF ENGINEERS
SACRAMENTO, CALIFORNIA

SACRAMENTO DISTRICT
IN-HOUSE DESIGN
1325 "J" STREET
SACRAMENTO, CA 95814-2922

WEST SACRAMENTO COUNTY CA

WEST SACRAMENTO AREA FLOOD CONTROL AGENCY FLOOD RISK REDUCTION PROJECTS

SOUTH CROSS LEVEE (ALT. 5)
PLAN VIEW AND PROFILE

Sheet reference number:
PLATE 04

AM-XX

8.1.2 | PLOT DATE: 20-NOV-2015 | PLOT TIME: 15:13 | C:\Users\L2EDDBYL\Desktop\West_Sac_GRR\South_Cross_Levee\Cad\HQ_10302015\Plate4_P&P.dgn

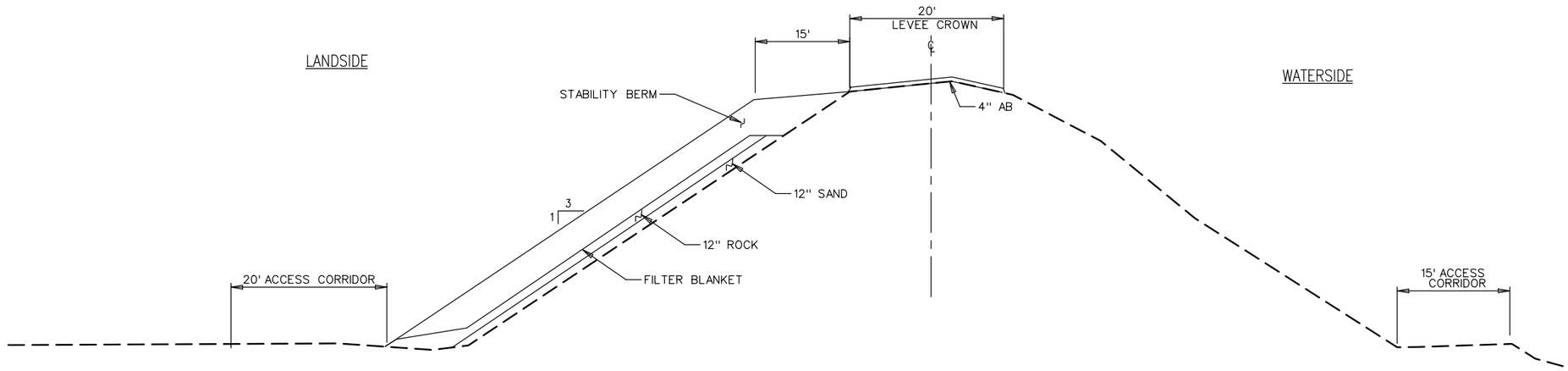

A TYPICAL STABILITY BERM SECTION
SCALE: NOT TO SCALE, STA. 0+00 TO 6+00
STA. 54+00 TO 62+00

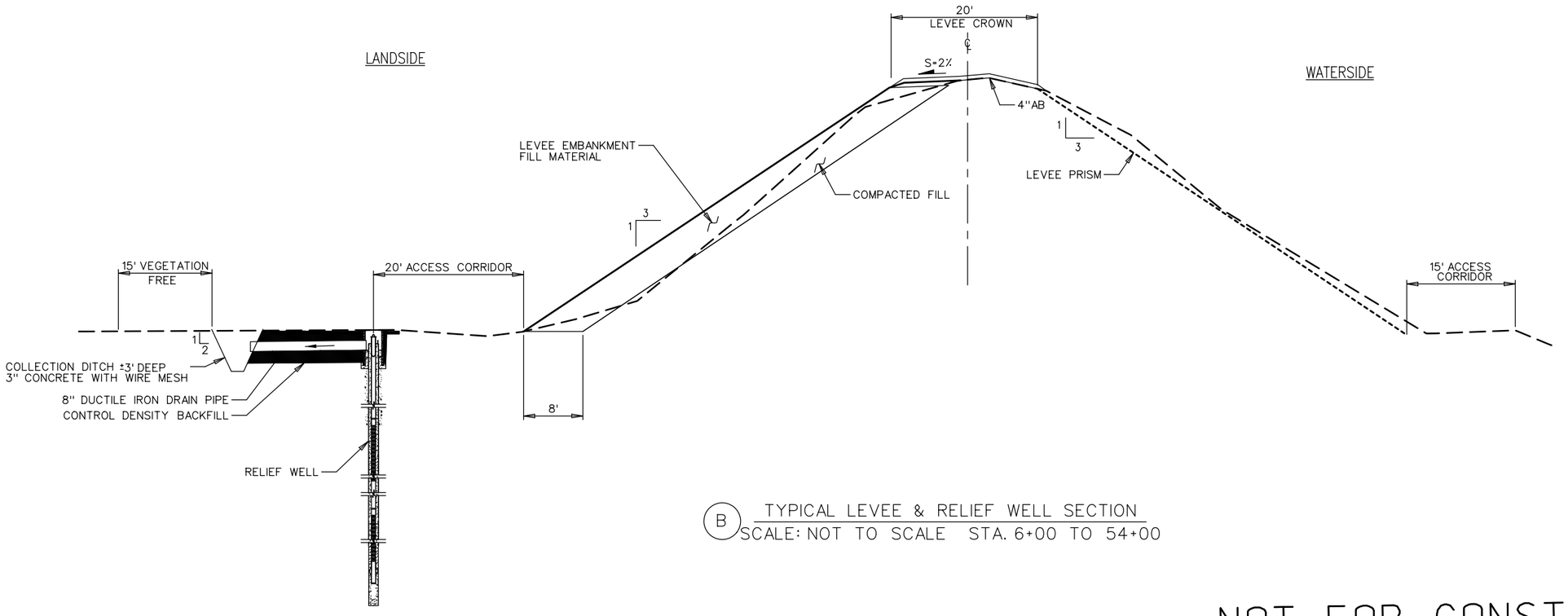

B TYPICAL LEVEE & RELIEF WELL SECTION
SCALE: NOT TO SCALE STA. 6+00 TO 54+00

NOT FOR CONSTRUCTION

US Army Corps of Engineers
Sacramento District

Symbol	Description	Date	Approved

Designed by: | Date: | Rev.
Dwn by: | Spec No.: | Design file no:
Reviewed by: | Drawing Code:
Submitted by: | File name: | Plot date: | Plot scale:
CHIEF, CIV ENGR DES SEC A

DEPARTMENT OF THE ARMY
CORPS OF ENGINEERS
SACRAMENTO, CALIFORNIA

SACRAMENTO DISTRICT
IN-HOUSE DESIGN
1325 'J' STREET
SACRAMENTO, CA 95814-2922

WEST SACRAMENTO COUNTY CA

WEST SACRAMENTO AREA FLOOD CONTROL AGENCY FLOOD RISK REDUCTION PROJECTS
SOUTH CROSS LEVEE
TYPICAL STABILITY BERM AND RELIEF WELL DETAILS

Sheet reference number:
PLATE 05

AM-XX

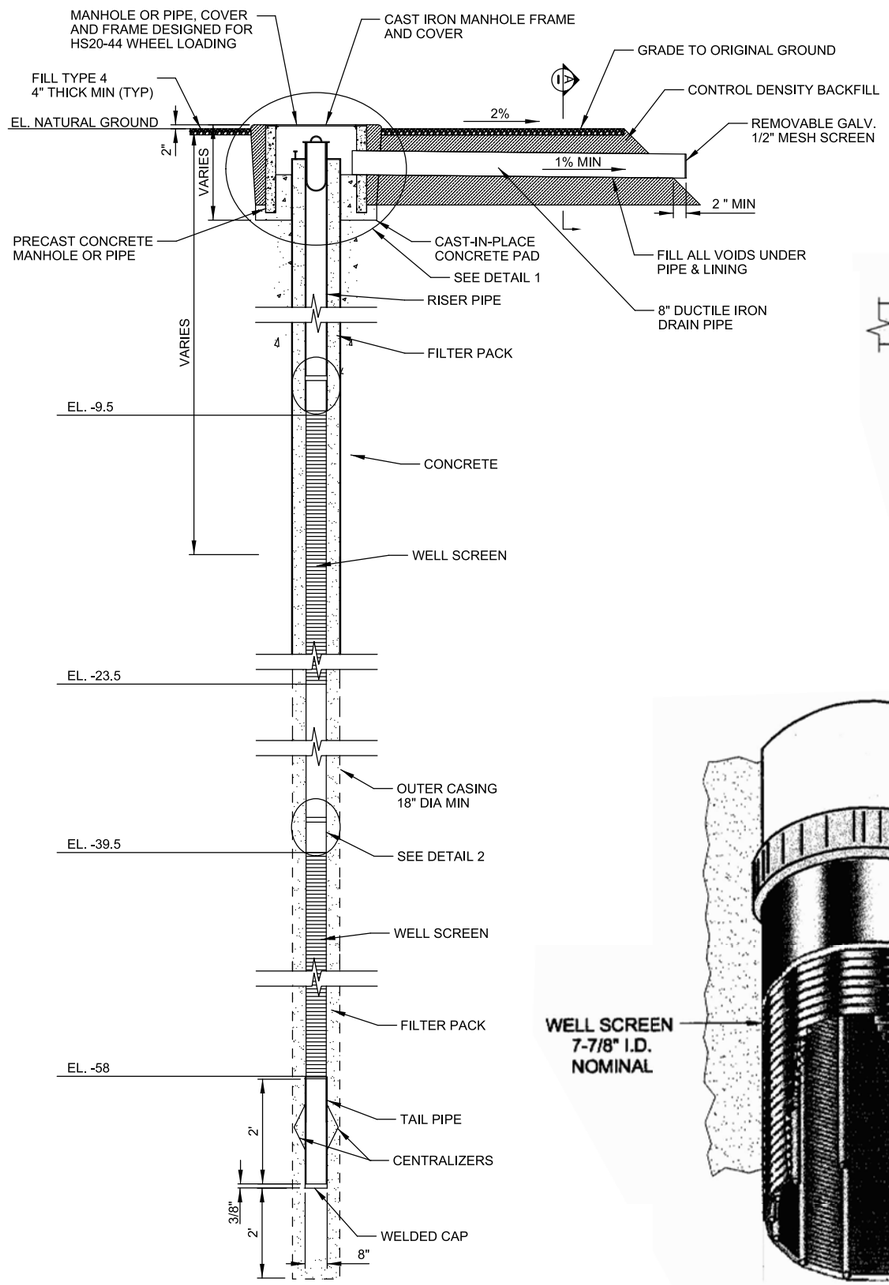

A TYPICAL RELIEF WELL SECTION
SCALE: NOT TO SCALE

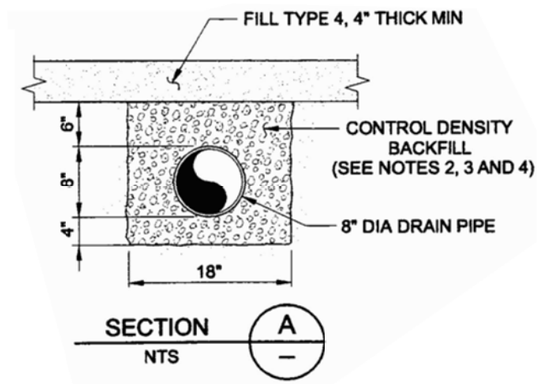

SECTION A
NTS

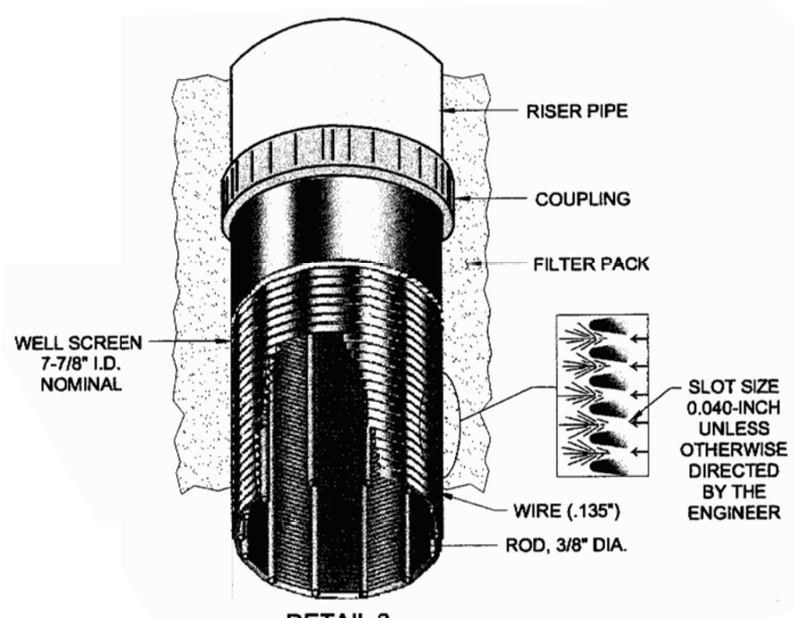

DETAIL 2
NTS

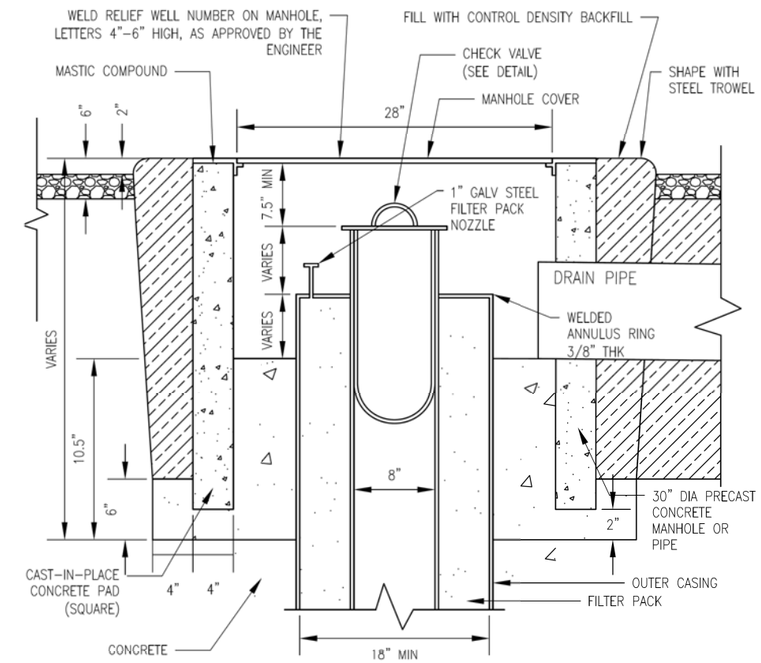

DETAIL 1
NTS

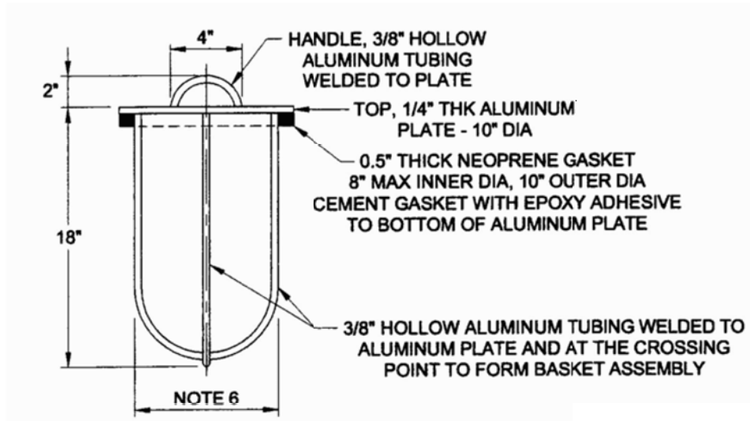

CHECK VALVE DETAIL
NTS

NOT FOR CONSTRUCTION

US Army Corps of Engineers
Sacramento District

Symbol	Description	Date	Approved

Designed by:
Dwn by: Spec No.: Design file no:
Reviewed by: Drawing Code:
Submitted by: File name: Plot date: Plot scale:
CHIEF, CIV ENGR DES SEC A
Date: Rev.

DEPARTMENT OF THE ARMY
CORPS OF ENGINEERS
SACRAMENTO, CALIFORNIA

SACRAMENTO DISTRICT
IN-HOUSE DESIGN
1325 "J" STREET
SACRAMENTO, CA 95814-2922

WEST SACRAMENTO COUNTY CA

WEST SACRAMENTO AREA FLOOD CONTROL AGENCY FLOOD RISK REDUCTION PROJECTS

SOUTH CROSS LEVEE
RELIEF WELL DETAILS

Sheet reference number:
PLATE 06