APPENDIX E

CONCEPTUAL ENGINEERING DRAWINGS

PART 2

Alignment D1 Drawings

Alignment D2 Drawings

Alignment D Common Section Drawings

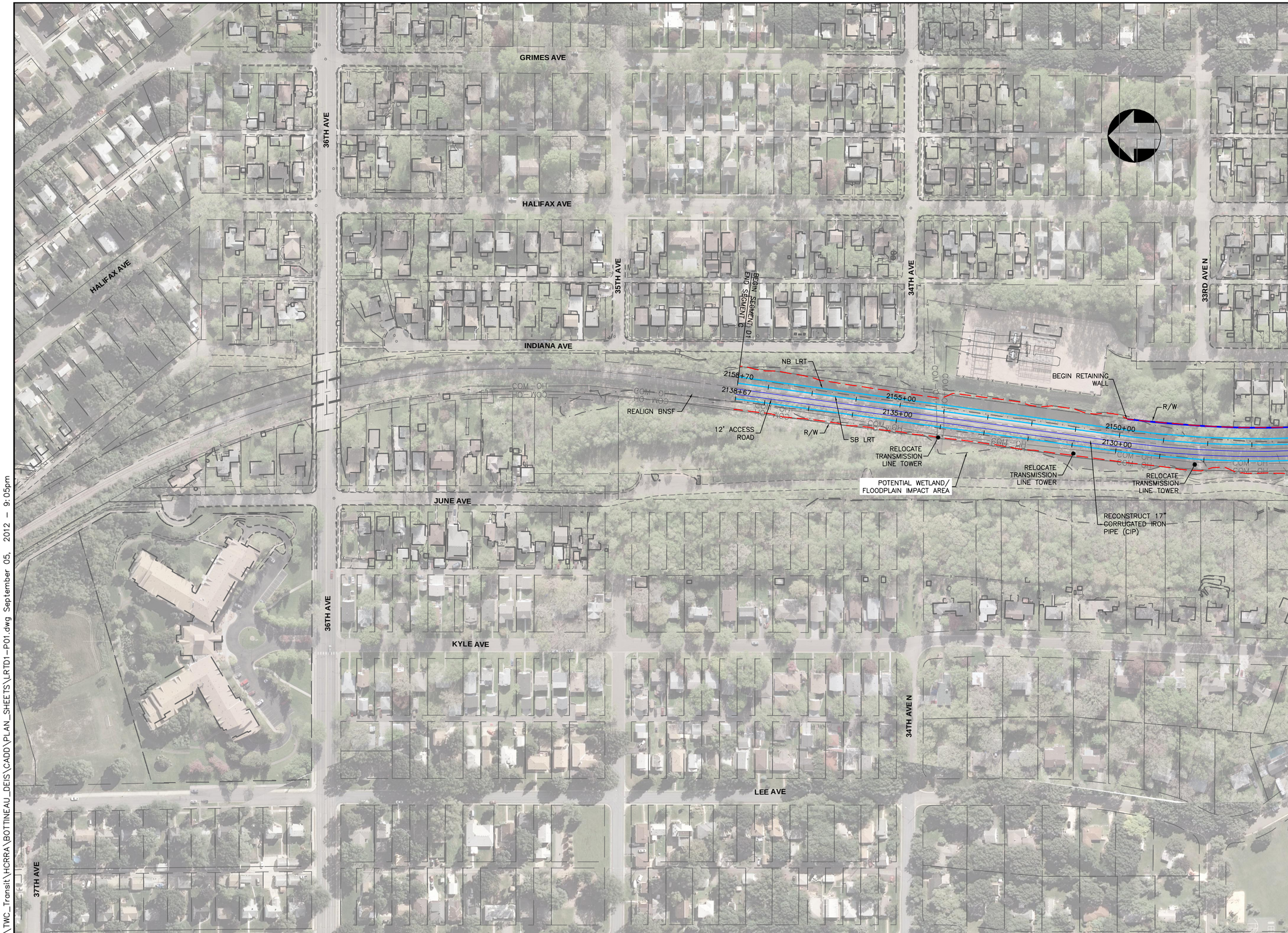

K:\TWC_Transit\HCRRA\BOTTINEAU_DEIS\CADD\PLAN_SHEETS\LRTD1-P01.dwg September 05, 2012 - 9:05pm

Bottineau Transitway
DRAFT ENVIRONMENTAL IMPACT STATEMENT

Hennepin

CONSULTANTS:

Kimley-Horn and Associates, Inc.
2550 UNIVERSITY AVE. WEST, SUITE 345N
ST. PAUL, MINNESOTA 55114
TEL. NO. (651) 645-4197
FAX. NO. (651) 645-5116

SRF Consulting Group, Inc.

LTK Engineering Services

DRAWING NAME	LRTD1-P01.dwg
DESIGNED BY:	
DRAWN BY:	
CHECKED BY:	
DATE:	9/5/2012
PROJECT NO.	160528003.4.100

SCALE
0 100' 200'

BOTTINEAU TRANSITWAY
DRAFT EIS
CONCEPTUAL DESIGN

LRT ALIGNMENT D1
SHEET 1 OF 18

ALIGNMENT PLAN

STA 2147+00 - 2158+70

SHEET NUMBER
76 OF 122

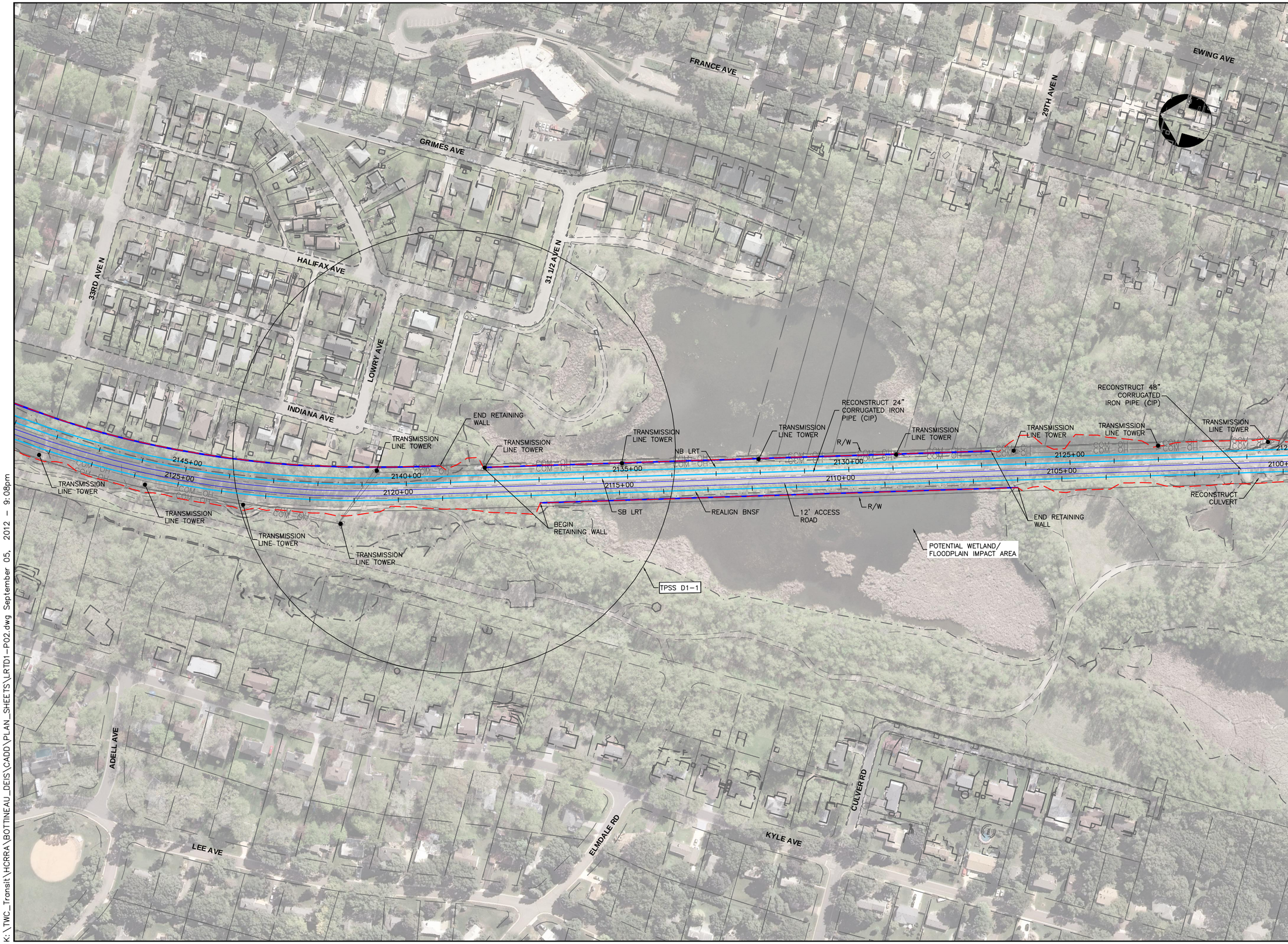

K:\TWC_Transit\HCRRA\BOTTINEAU_DEIS\CADD\PLAN_SHEETS\LRTD1-P02.dwg September 05, 2012 - 9:08pm

Bottineau Transitway
DRAFT ENVIRONMENTAL IMPACT STATEMENT

Hennepin

CONSULTANTS:

Kimley-Horn and Associates, Inc.
2550 UNIVERSITY AVE. WEST, SUITE 345N
ST. PAUL, MINNESOTA 55114
TEL. NO. (651) 645-4197
FAX NO. (651) 645-5116

SRF Consulting Group, Inc.

LTK Engineering Services

DRAWING NAME	LRTD1-P02.dwg
DESIGNED BY:	
DRAWN BY:	
CHECKED BY:	
DATE:	9/5/2012
PROJECT NO.	160528003.4.100

SCALE
0 100' 200'

BOTTINEAU TRANSITWAY
DRAFT EIS
CONCEPTUAL DESIGN

LRT ALIGNMENT D1
SHEET 2 OF 18

ALIGNMENT PLAN

STA 2120+00 - 2148+00

SHEET NUMBER
77 OF 122

K:\TWC_Transit\HCRRA\BOTTINEAU_DEIS\CADD\PLAN_SHEETS\LRTD1-P03.dwg September 05, 2012 - 9:11pm

Bottineau Transitway
DRAFT ENVIRONMENTAL IMPACT STATEMENT

Hennepin

CONSULTANTS:

Kimley-Horn and Associates, Inc.
2550 UNIVERSITY AVE. WEST, SUITE 345N
ST. PAUL, MINNESOTA 55114
TEL. NO. (651) 645-4197
FAX. NO. (651) 645-5116

SRF Consulting Group, Inc.

LTK Engineering Services

DRAWING NAME	LRTD1-P03.dwg
DESIGNED BY:	
DRAWN BY:	
CHECKED BY:	
DATE:	9/5/2012
PROJECT NO.	160528003.4.100

SCALE
0 100' 200'

BOTTINEAU TRANSITWAY
DRAFT EIS
CONCEPTUAL DESIGN

LRT ALIGNMENT D1
SHEET 3 OF 18

ALIGNMENT PLAN

STA 2118+00 - 2096+00

SHEET NUMBER
78 OF 122

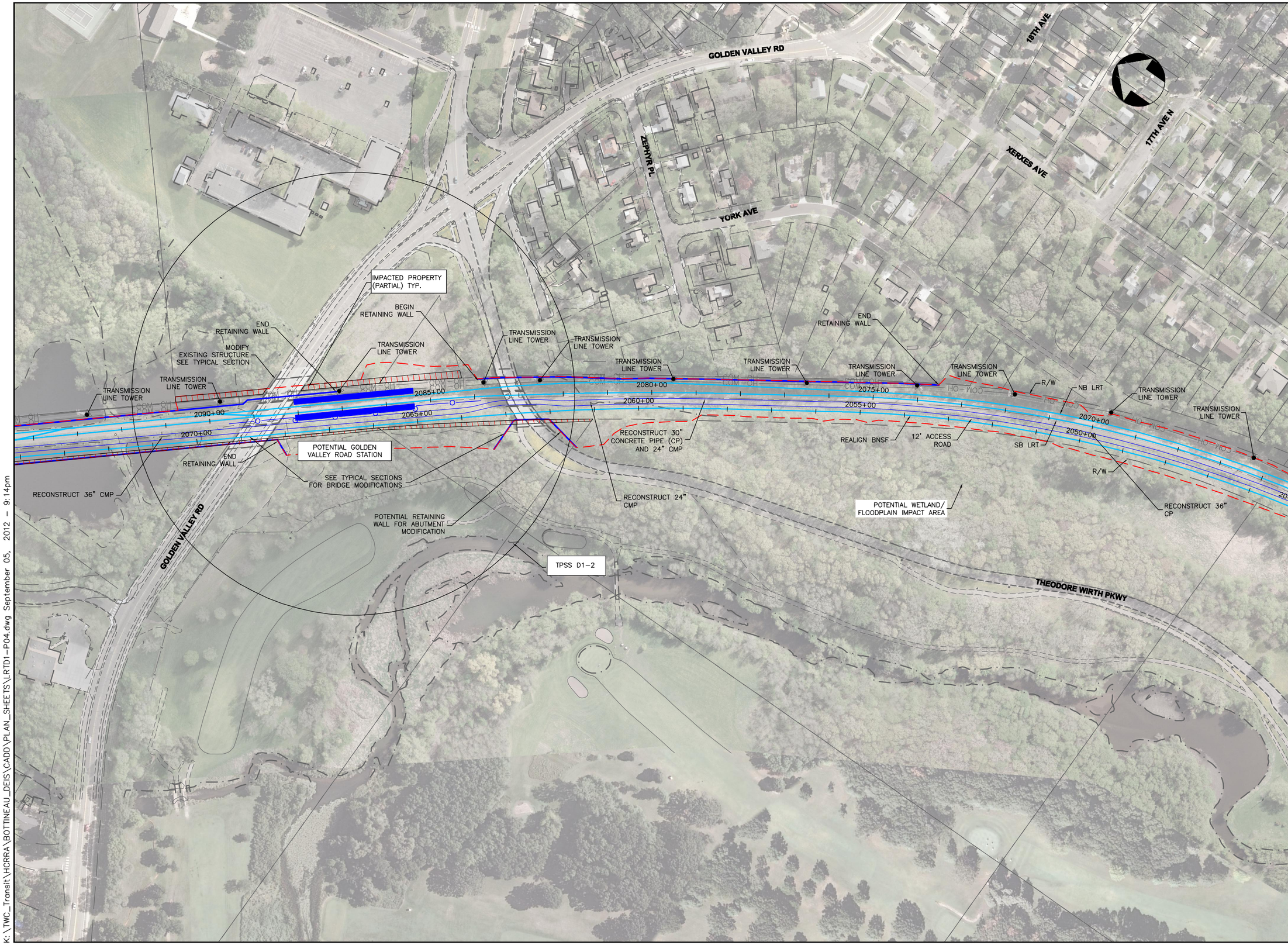

K:\TWC_Transit\HCRRA\BOTTINEAU_DEIS\CADD\PLAN_SHEETS\LRTD1-P04.dwg September 05, 2012 - 9:14pm

Bottineau Transitway
DRAFT ENVIRONMENTAL IMPACT STATEMENT

Hennepin

CONSULTANTS:

Kimley-Horn and Associates, Inc.
2550 UNIVERSITY AVE. WEST, SUITE 345N
ST. PAUL, MINNESOTA 55114
TEL. NO. (651) 645-4197
FAX NO. (651) 645-5116

SRF Consulting Group, Inc.

LTK Engineering Services

DRAWING NAME	LRTD1-P04.dwg
DESIGNED BY:	
DRAWN BY:	
CHECKED BY:	
DATE:	9/5/2012
PROJECT NO.	160528003.4.100

SCALE
0 100' 200'

BOTTINEAU TRANSITWAY
DRAFT EIS
CONCEPTUAL DESIGN

LRT ALIGNMENT D1
SHEET 4 OF 18

ALIGNMENT PLAN

STA 2066+00 - 2094+00

SHEET NUMBER
79 OF 122

K:\TWC_Transit\HCRRA\BOTTINEAU_DEIS\CADD\PLAN_SHEETS\LRTD1-P05.dwg September 05, 2012 - 9:16pm

Bottineau Transitway
DRAFT ENVIRONMENTAL IMPACT STATEMENT

Hennepin

CONSULTANTS:

Kimley-Horn and Associates, Inc.
2550 UNIVERSITY AVE. WEST, SUITE 345N
ST. PAUL, MINNESOTA 55114
TEL. NO. (651) 645-4197
FAX NO. (651) 645-5116

SRF Consulting Group, Inc.

LTK Engineering Services

DRAWING NAME	LRTD1-P05.dwg
DESIGNED BY:	
DRAWN BY:	
CHECKED BY:	
DATE:	9/5/2012
PROJECT NO.	160528003.4.100

SCALE
0 100' 200'

BOTTINEAU TRANSITWAY
DRAFT EIS
CONCEPTUAL DESIGN

LRT ALIGNMENT D1
SHEET 5 OF 18

ALIGNMENT PLAN

STA 2042+00 - 2070+00

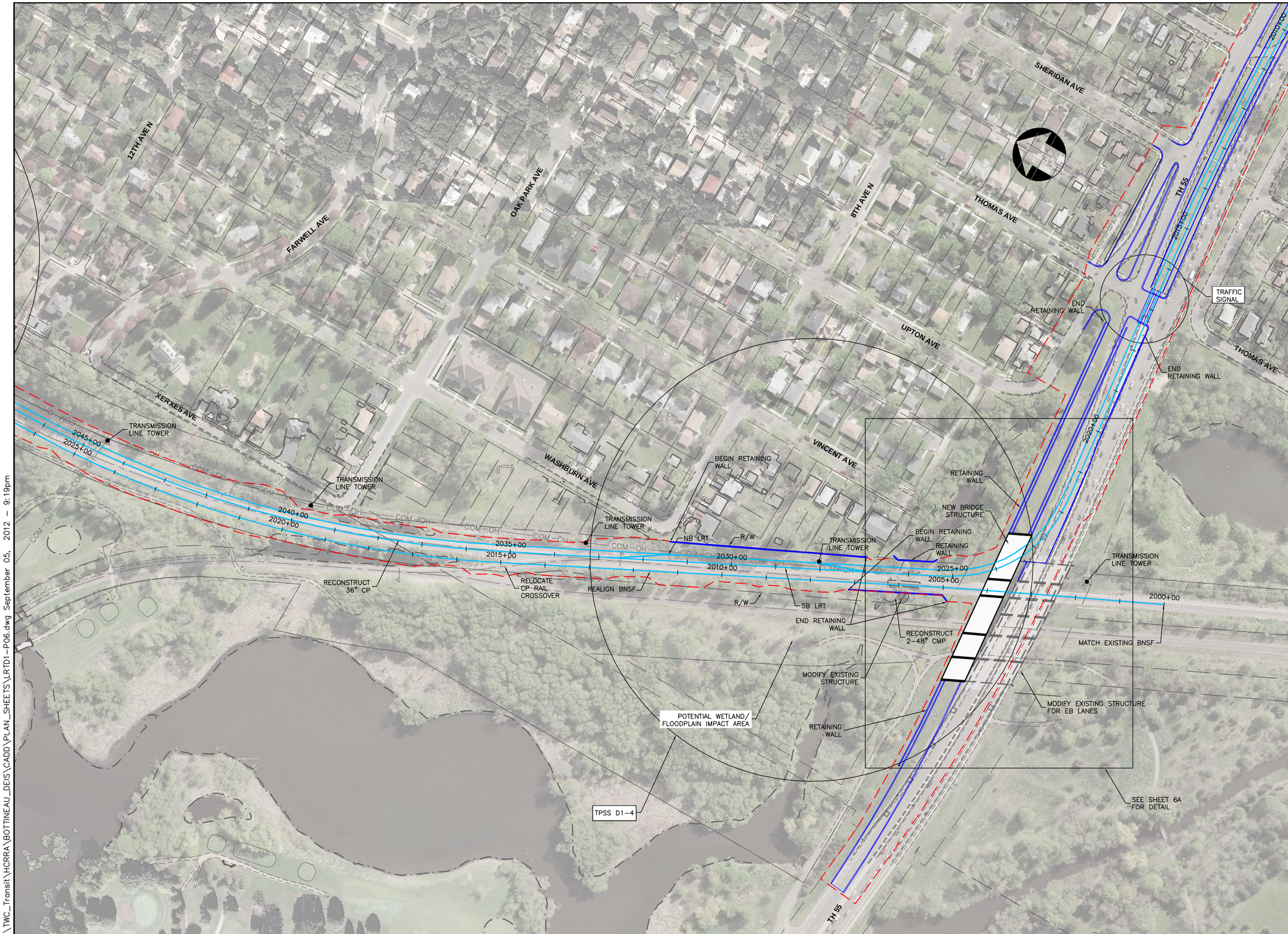

K:\TWC_Transit\HCRRA\BOTTINEAU_DEIS\CADD\PLAN_SHEETS\LRTD1-P06.dwg September 05, 2012 - 9:19pm

Bottineau Transitway
DRAFT ENVIRONMENTAL IMPACT STATEMENT

Hennepin

CONSULTANTS:

Kimley-Horn and Associates, Inc.
2550 UNIVERSITY AVE. WEST, SUITE 345N
ST. PAUL, MINNESOTA 55114
TEL. NO. (651) 645-4197
FAX. NO. (651) 645-5116

SRF Consulting Group, Inc.

LTK Engineering Services

DRAWING NAME	LRTD1-P06.dwg
DESIGNED BY:	
DRAWN BY:	
CHECKED BY:	
DATE:	9/5/2012
PROJECT NO.	160528003.4.100

SCALE
0 100' 200'

BOTTINEAU TRANSITWAY
DRAFT EIS
CONCEPTUAL DESIGN

LRT ALIGNMENT D1
SHEET 6 OF 18

ALIGNMENT PLAN

STA 2010+00 - 2046+00

SHEET NUMBER
81 OF 122

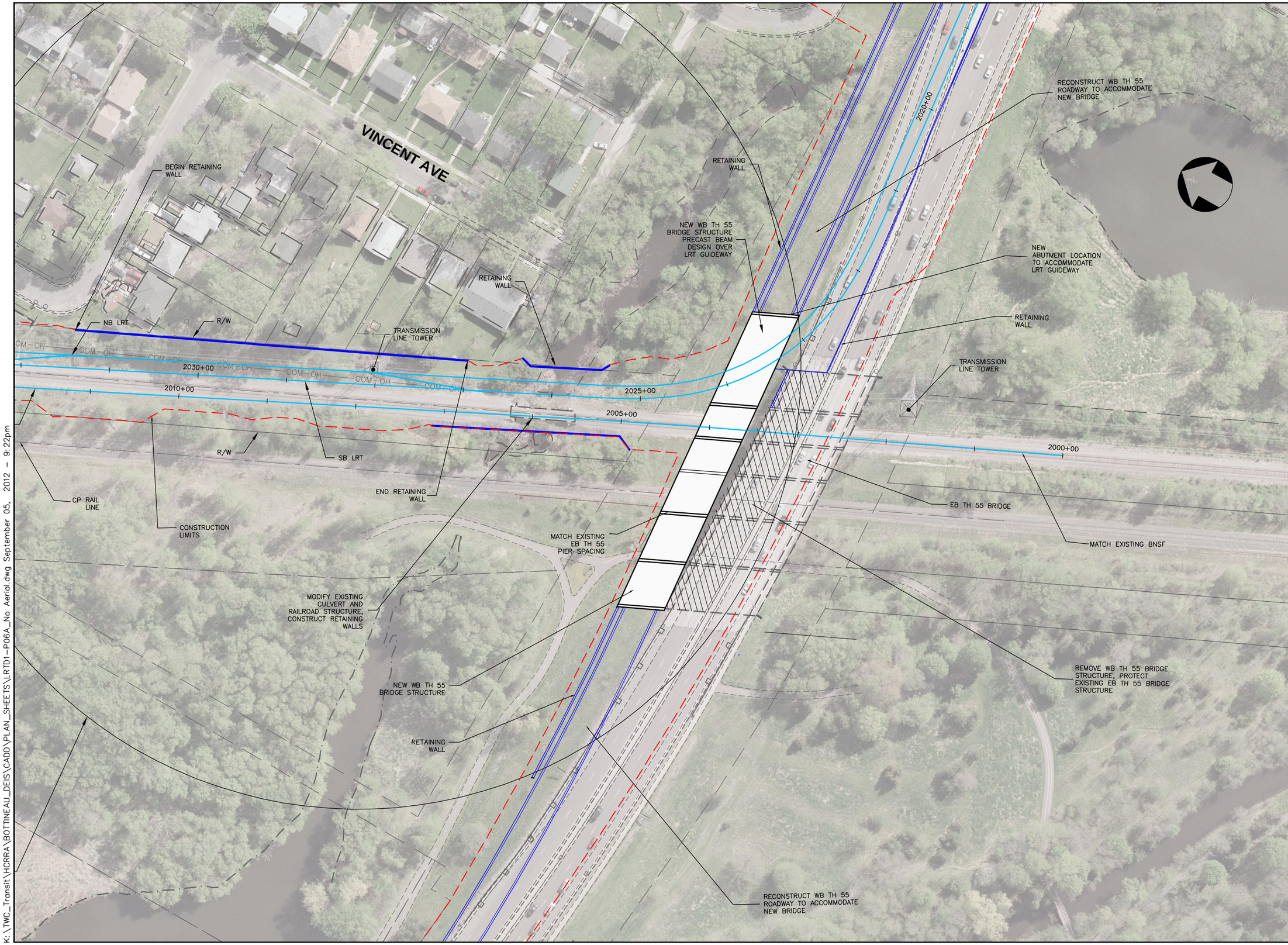

K:\TWC_Transit\HCRRA\BOTTINEAU_DEIS\CADD\PLAN_SHEETS\LRTD1-P06A_No Aerial.dwg September 05, 2012 - 9:22pm

Bottineau Transitway
DRAFT ENVIRONMENTAL IMPACT STATEMENT

Hennepin

CONSULTANTS:

Kimley-Horn and Associates, Inc.
2550 UNIVERSITY AVE. WEST, SUITE 345N
ST. PAUL, MINNESOTA 55114
TEL. NO. (651) 645-4197
FAX. NO. (651) 645-5116

SRF Consulting Group, Inc.

LTK Engineering Services

DRAWING NAME	LRTD1-P06A_No Aerial.dwg
DESIGNED BY:	
DRAWN BY:	
CHECKED BY:	
DATE:	9/5/2012
PROJECT NO.	160528003.4.100

SCALE
0 50' 100'

BOTTINEAU TRANSITWAY
DRAFT EIS
CONCEPTUAL DESIGN

LRT ALIGNMENT D1
SHEET 7 OF 18

ALIGNMENT PLAN

STA 2019+00 - 2032+00

SHEET NUMBER
82 OF 122

K:\TWC_Transit\HCRRA\BOTTINEAU_DEIS\CADD\PLAN_SHEETS\LRTD1-P07.dwg September 05, 2012 - 9:23pm

Bottineau Transitway
DRAFT ENVIRONMENTAL IMPACT STATEMENT

Hennepin

CONSULTANTS:

Kimley-Horn and Associates, Inc.
2550 UNIVERSITY AVE. WEST, SUITE 345N
ST. PAUL, MINNESOTA 55114
TEL. NO. (651) 645-4197
FAX. NO. (651) 645-5116

SRF Consulting Group, Inc.

LTK Engineering Services

DRAWING NAME	LRTD1-P07.dwg
DESIGNED BY:	
DRAWN BY:	
CHECKED BY:	
DATE:	9/5/2012
PROJECT NO.	160528003.4.100

SCALE
0 100' 200'

BOTTINEAU TRANSITWAY
DRAFT EIS
CONCEPTUAL DESIGN

LRT ALIGNMENT D1
SHEET 8 OF 18

ALIGNMENT PLAN

STA 2000+00 - 2032+00

SHEET NUMBER
83 OF 122

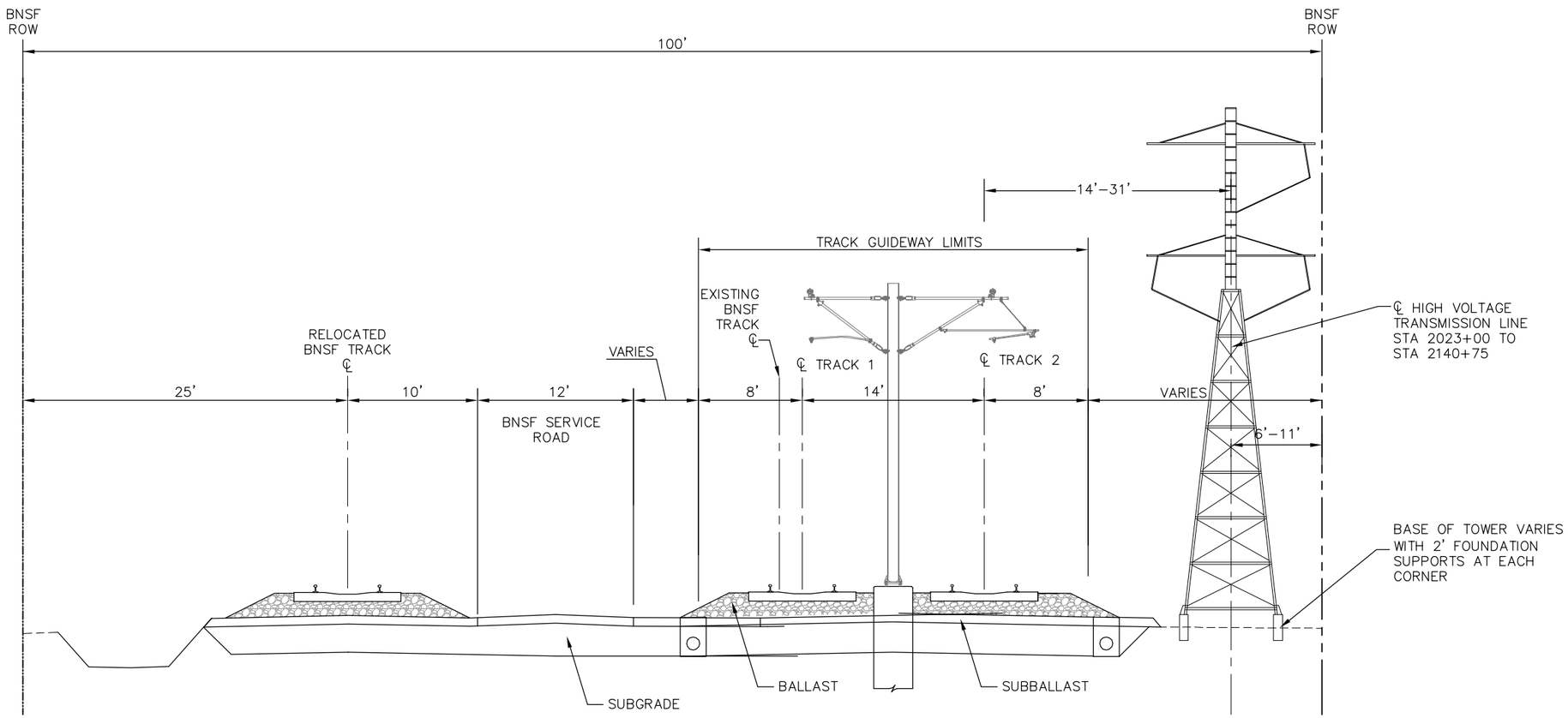

TYPICAL SECTION D1-1

SEG. D1 - STA. 2031+00 TO STA. 2045+00
STA. 2065+00 TO STA. 2170+00
STA. 2095+00 TO STA. 2108+00
STA. 2117+00 TO STA. 2127+00
STA. 2150+00 TO STA. 2158+70

NOTE: STATIONING REPRESENTS THE SB LRT TRACK

Bottineau Transitway
DRAFT ENVIRONMENTAL IMPACT STATEMENT

Hennepin

CONSULTANTS:

Kimley-Horn and Associates, Inc.
2550 UNIVERSITY AVE. WEST, SUITE 345N
ST. PAUL, MINNESOTA 55114
TEL. NO. (651) 645-4197
FAX. NO. (651) 645-5116

SRF Consulting Group, Inc.

LTK Engineering Services

DRAWING NAME	BOTT-TYP D1-1.dwg
DESIGNED BY:	
DRAWN BY:	
CHECKED BY:	
DATE:	9/5/2012
PROJECT NO.	160528003.4.100

BOTTINEAU CORRIDOR
DRAFT EIS
CONCEPTUAL DESIGN

LRT ALIGNMENT D1
SHEET 9 OF 18

TYPICAL SECTION D1-1

SHEET NUMBER
84 OF 122

K:\TWC_Transit\HCRRA\BOTTINEAU_DEIS\CADD\PLAN_SHEETS\BOTT-TYP D1-1.dwg January 08, 2013 - 3:01pm

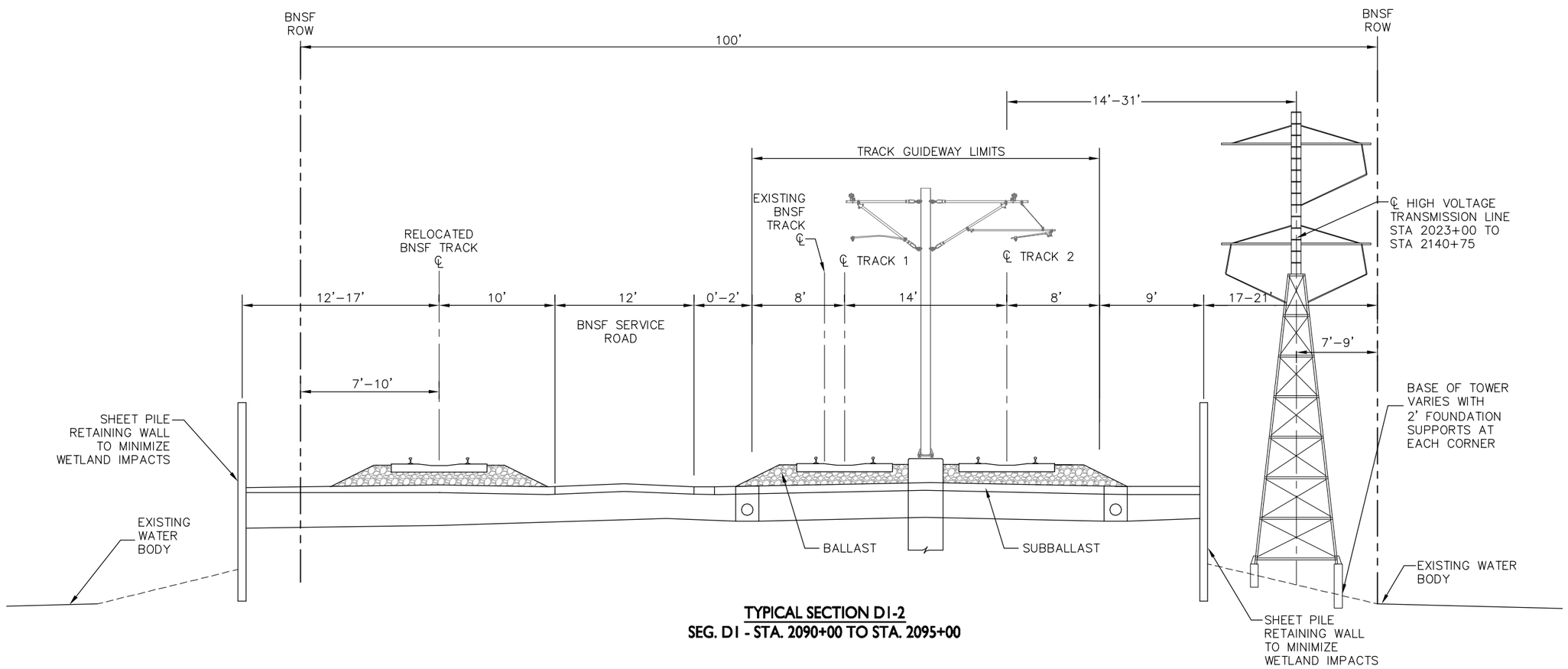

TYPICAL SECTION D1-2
SEG. D1 - STA. 2090+00 TO STA. 2095+00

NOTE: STATIONING REPRESENTS THE SB LRT TRACK

BottineauTransitway
DRAFT ENVIRONMENTAL IMPACT STATEMENT

Hennepin

CONSULTANTS:

Kimley-Horn and Associates, Inc.
2550 UNIVERSITY AVE. WEST, SUITE 345N
ST. PAUL, MINNESOTA 55114
TEL. NO. (651) 645-4197
FAX NO. (651) 645-5116

SRF Consulting Group, Inc.

LTK Engineering Services

DRAWING NAME	BOTT-TYP D1-2.dwg
DESIGNED BY:	
DRAWN BY:	
CHECKED BY:	
DATE:	9/5/2012
PROJECT NO.	160528003.4.100

BOTTINEAU CORRIDOR
DRAFT DEIS
CONCEPTUAL DESIGN

LRT ALIGNMENT D1
SHEET 10 OF 18

TYPICAL SECTION D1-2

SHEET NUMBER
85 OF 122

K:\TWC_Transit\HCRRA\BOTTINEAU_DEIS\CADD\PLAN_SHEETS\BOTT-TYP D1-2.dwg January 08, 2013 - 3:11pm

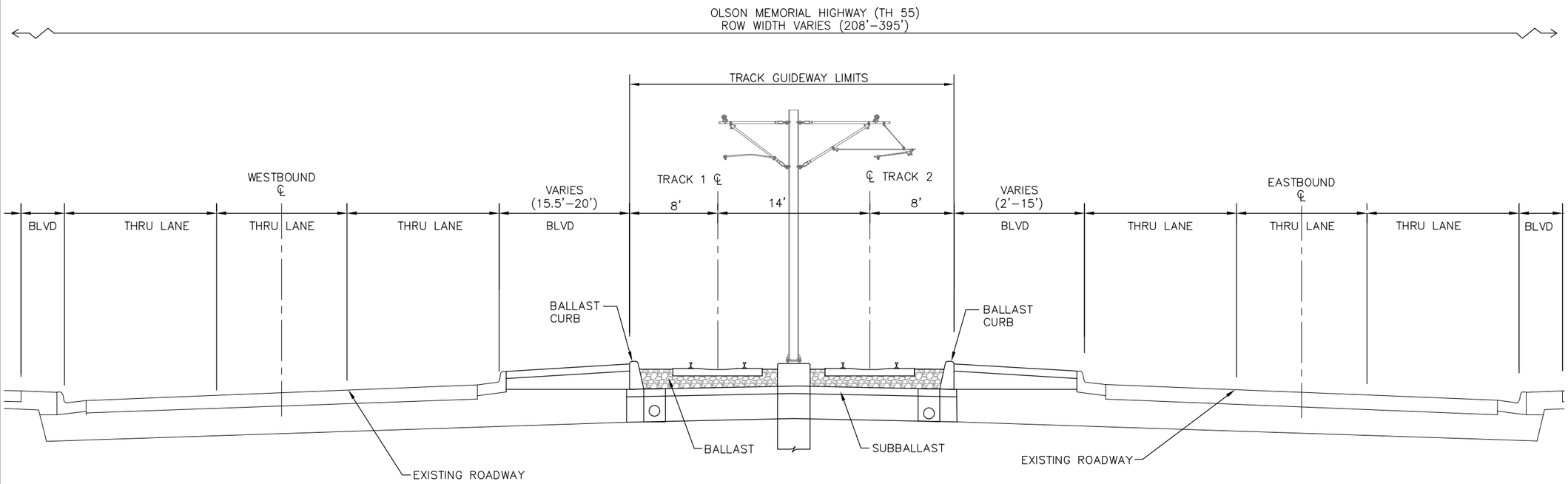

TYPICAL SECTION D1-3
SEG. D1 - STA. 2000+00 TO STA. 2021+00

NOTE: STATIONING REPRESENTS THE SB LRT TRACK

K:\TWC_Transit\HCRRA\BOTTINEAU_DEIS\CADD\PLAN_SHEETS\BOTT-TYP D1-3.dwg January 08, 2013 - 3:13pm

Bottineau Transitway
DRAFT ENVIRONMENTAL IMPACT STATEMENT

Hennepin

CONSULTANTS:

Kimley-Horn and Associates, Inc.
2550 UNIVERSITY AVE. WEST, SUITE 345N
ST. PAUL, MINNESOTA 55114
TEL. NO. (651) 645-4197
FAX. NO. (651) 645-5116

SRF Consulting Group, Inc.

LTK Engineering Services

DRAWING NAME	BOTT-TYP D1-3.dwg
DESIGNED BY:	
DRAWN BY:	
CHECKED BY:	
DATE:	9/5/2012
PROJECT NO.	160528003.4.100

BOTTINEAU CORRIDOR
DRAFT EIS
CONCEPTUAL DESIGN

LRT ALIGNMENT D1
SHEET 11 OF 18

TYPICAL SECTION D1-3

SHEET NUMBER
86 OF 122

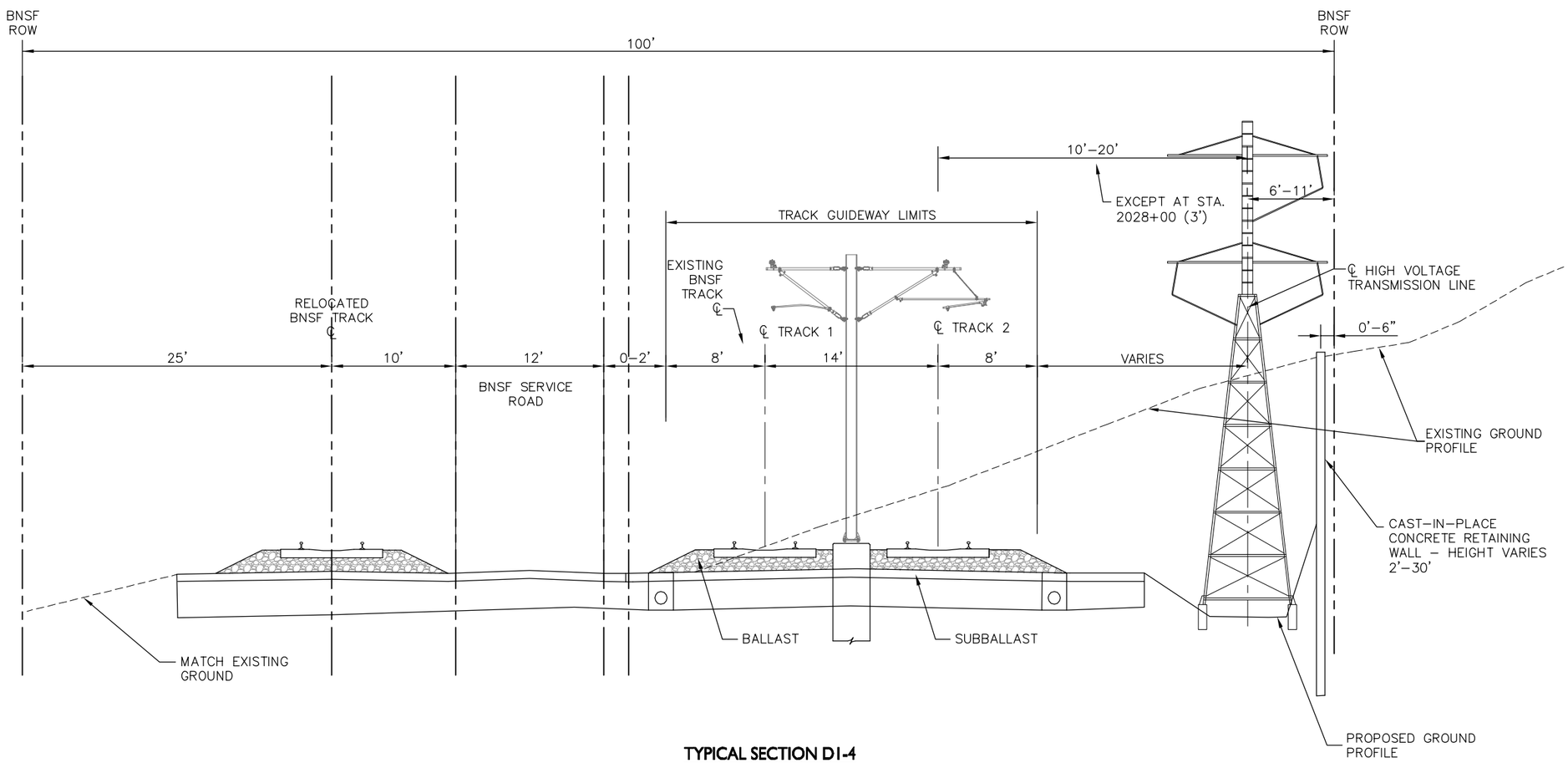

TYPICAL SECTION D1-4

SEG. D1 - STA. 2025+00 TO STA. 2031+00
STA. 2059+00 TO STA. 2065+00
STA. 2074+00 TO STA. 2081+00
STA. 2107+00 TO STA. 2117+00
STA. 2139+00 TO STA. 2150+00

NOTE: STATIONING REPRESENTS THE SB LRT TRACK

K:\TWC_Transit\HCRRA\BOTTINEAU_DEIS\CADD\PLAN_SHEETS\BOTT-TYP D1-4.dwg January 08, 2013 - 1:15pm

BottineauTransitway
DRAFT ENVIRONMENTAL IMPACT STATEMENT

Hennepin

CONSULTANTS:

Kimley-Horn and Associates, Inc.
2550 UNIVERSITY AVE. WEST, SUITE 345N
ST. PAUL, MINNESOTA 55114
TEL. NO. (651) 645-4197
FAX. NO. (651) 645-5116

SRF Consulting Group, Inc.

LTK Engineering Services

DRAWING NAME	BOTT-TYP D1-4.dwg
DESIGNED BY:	
DRAWN BY:	
CHECKED BY:	
DATE:	9/5/2012
PROJECT NO.	160528003.4.100

BOTTINEAU CORRIDOR
DRAFT DEIS
CONCEPTUAL DESIGN

LRT ALIGNMENT D1
SHEET 12 OF 18

TYPICAL SECTION D1-4

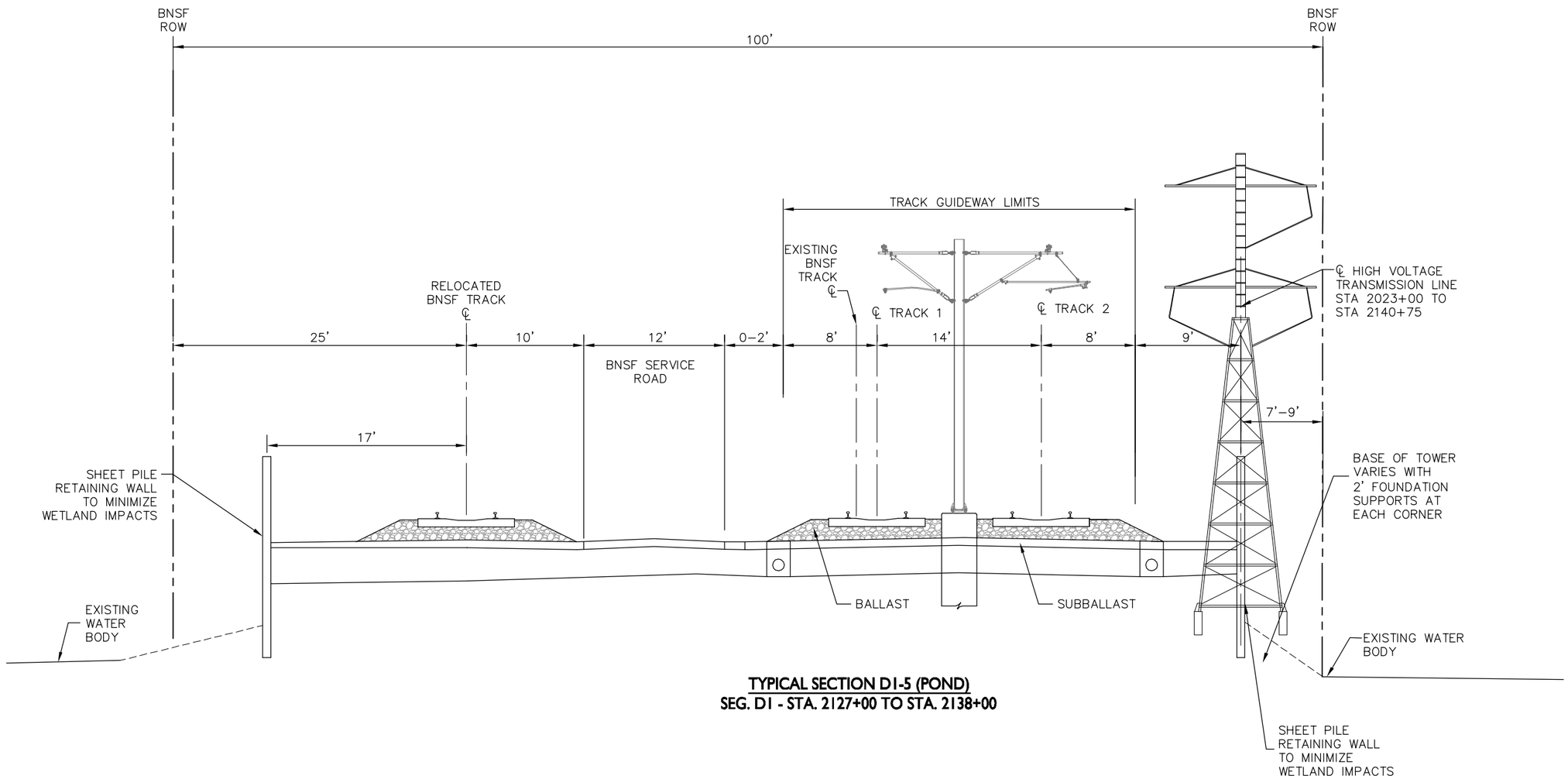

TYPICAL SECTION D1-5 (POND)
SEG. D1 - STA. 2127+00 TO STA. 2138+00

NOTE: STATIONING REPRESENTS THE SB LRT TRACK

BottineauTransitway
DRAFT ENVIRONMENTAL IMPACT STATEMENT

Hennepin

CONSULTANTS:

Kimley-Horn and Associates, Inc.
2550 UNIVERSITY AVE. WEST, SUITE 345N
ST. PAUL, MINNESOTA 55114
TEL. NO. (651) 645-4197
FAX NO. (651) 645-5116

SRF Consulting Group, Inc.

LTK Engineering Services

DRAWING NAME	BOTT-TYP D1-5.dwg
DESIGNED BY:	
DRAWN BY:	
CHECKED BY:	
DATE:	9/5/2012
PROJECT NO.	160528003.4.100

BOTTINEAU CORRIDOR
DRAFT DEIS
CONCEPTUAL DESIGN

LRT ALIGNMENT D1
SHEET 13 OF 18

TYPICAL SECTION D1-2

SHEET NUMBER
88 OF 122

K:\TWC_Transit\HCRRA\BOTTINEAU_DEIS\CADD\PLAN_SHEETS\BOTT-TYP D1-5.dwg January 08, 2013 - 3:25pm

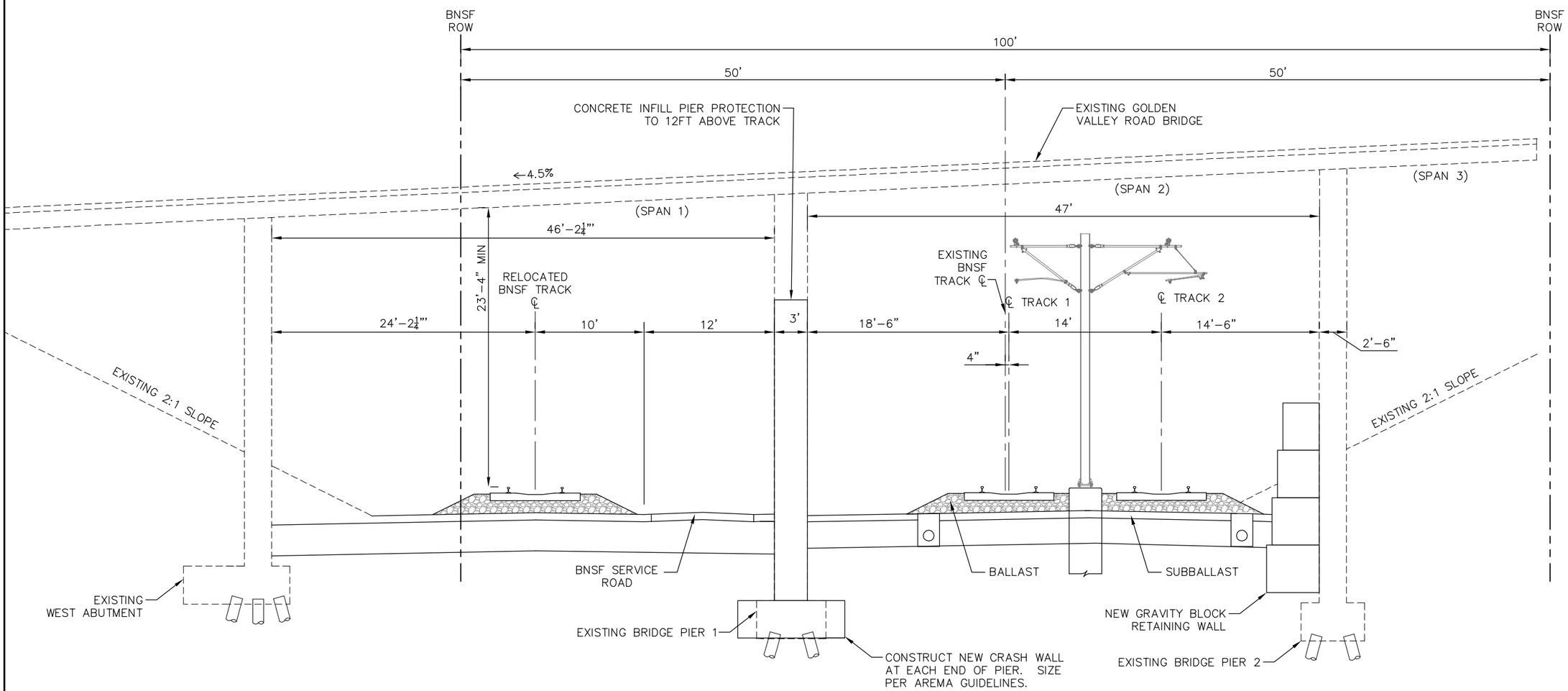

TYPICAL SECTION D1-6
Golden Valley Road Bridge
STA 2088+00 TO 2089+20

NOTE: STATIONING REPRESENTS THE SB LRT TRACK

K:\TWC_Transit\HCRRA\BOTTINEAU_DEIS\CADD\PLAN_SHEETS\BOTT-TYP Golden Valley Rd.dwg January 08, 2013 - 3:25pm

Bottineau Transitway
DRAFT ENVIRONMENTAL IMPACT STATEMENT

Hennepin

CONSULTANTS:

Kimley-Horn and Associates, Inc.
2550 UNIVERSITY AVE. WEST, SUITE 345N
ST. PAUL, MINNESOTA 55114
TEL. NO. (651) 645-4197
FAX. NO. (651) 645-5116

SRF Consulting Group, Inc.

LTK Engineering Services

DRAWING NAME	BOTT-TYP Golden Valley Rd.dwg
DESIGNED BY:	
DRAWN BY:	
CHECKED BY:	
DATE:	9/5/2012
PROJECT NO.	160528003.4.100

BOTTINEAU CORRIDOR
ALTERNATIVES ANALYSIS
CONCEPTUAL DESIGN

LRT ALIGNMENT D1
SHEET 14 OF 18

TYPICAL SECTION D1-6

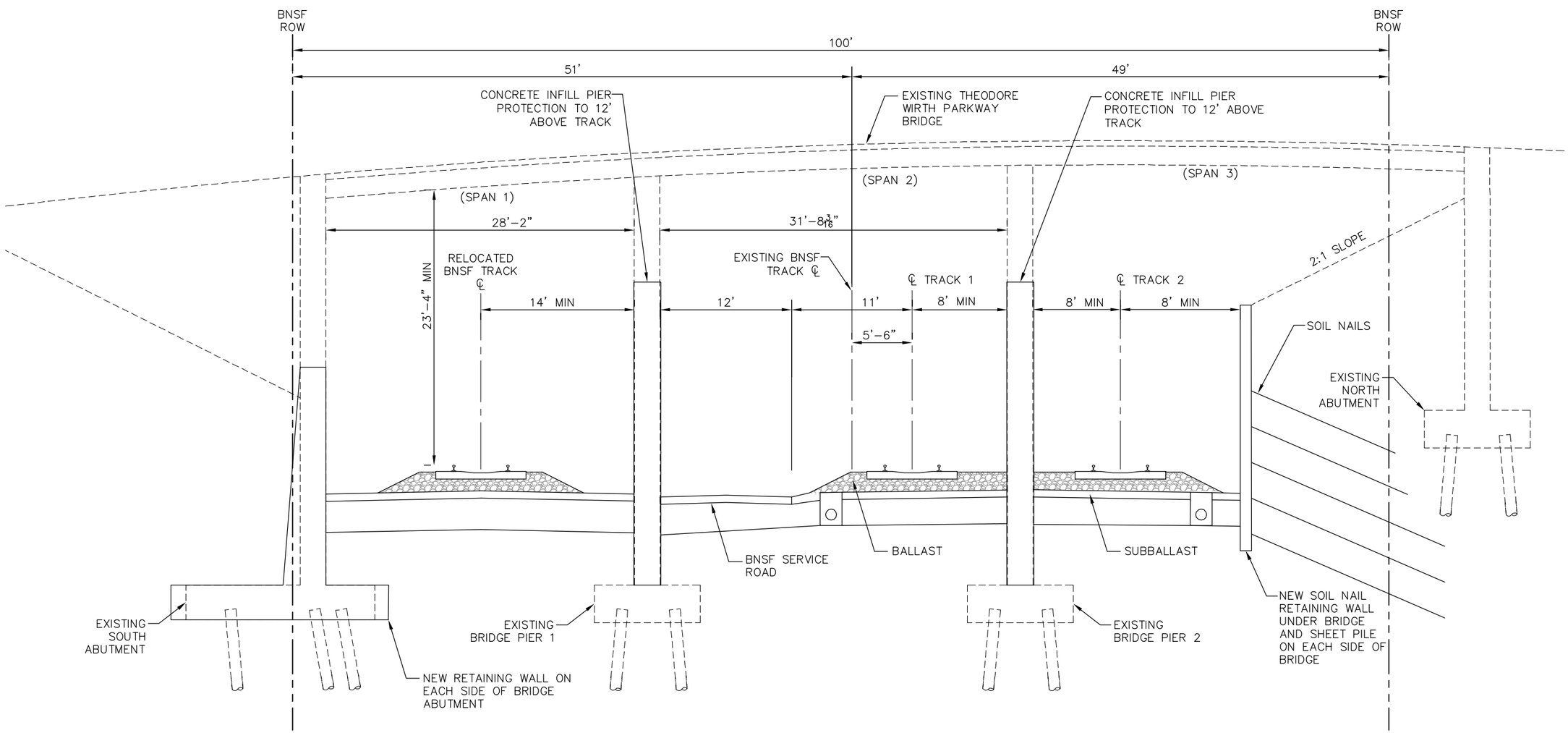

TYPICAL SECTION D-7
Theodore Wirth Parkway
STA. 2082+50 TO STA. 2083+50

NOTE: STATIONING REPRESENTS THE SB LRT TRACK

Bottineau Transitway
DRAFT ENVIRONMENTAL IMPACT STATEMENT

Hennepin

CONSULTANTS:

Kimley-Horn and Associates, Inc.
2550 UNIVERSITY AVE. WEST, SUITE 345N
ST. PAUL, MINNESOTA 55114
TEL. NO. (651) 645-4197
FAX. NO. (651) 645-5116

SRF Consulting Group, Inc.

LTK Engineering Services

DRAWING NAME	BOTT-TYP Theodore Wirth Pkwy.dwg
DESIGNED BY:	
DRAWN BY:	
CHECKED BY:	
DATE:	9/5/2012
PROJECT NO.	160528003.4.100

BOTTINEAU CORRIDOR
DRAFT EIS
CONCEPTUAL DESIGN

LRT ALIGNMENT D1
SHEET 15 OF 18

TYPICAL SECTION D1-7

SHEET NUMBER
90 OF 122

K:\TWC_Transit\HCRRA\BOTTINEAU_DEIS\CADD\PLAN_SHEETS\BOTT-TYP Theodore Wirth Pkwy.dwg January 08, 2013 - 3:55pm

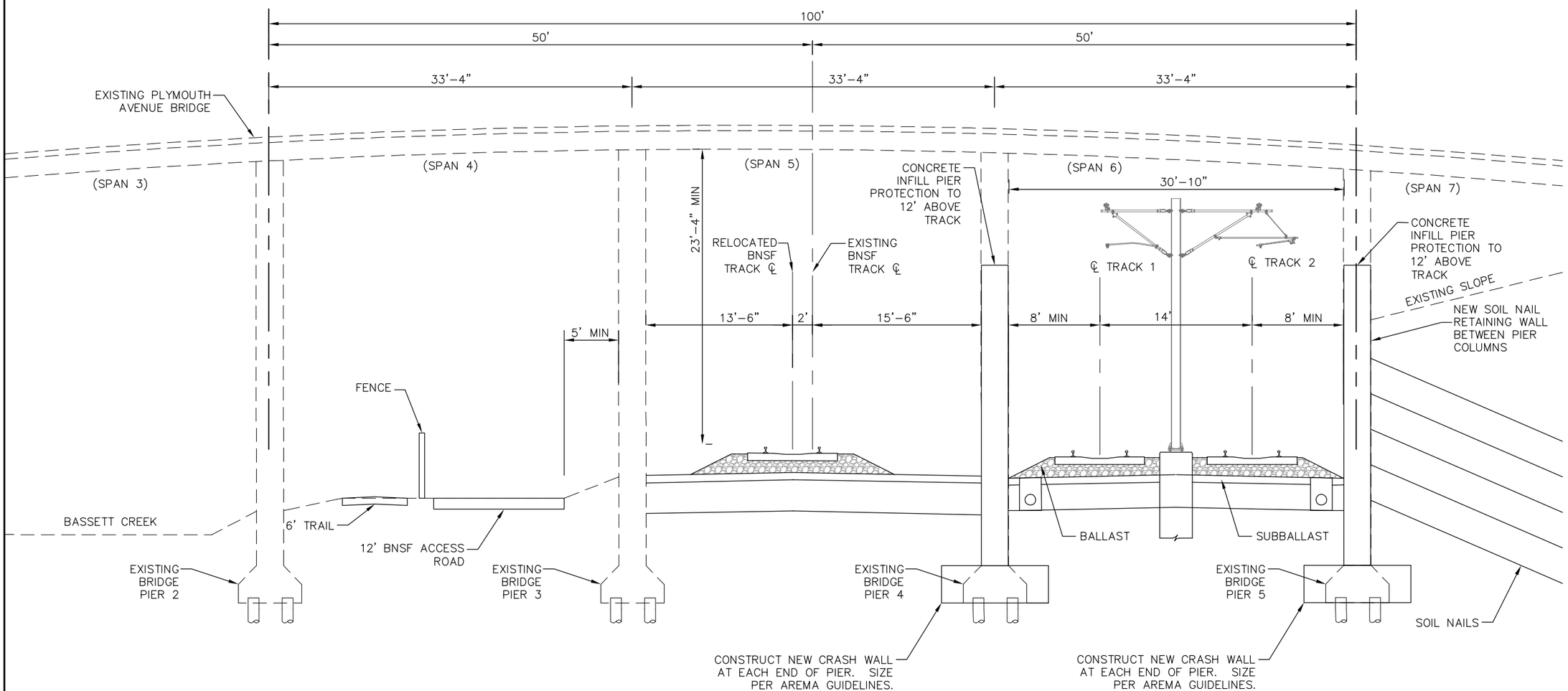

TYPICAL SECTION D1-8
Plymouth Ave Bridge
STA. 2052+00 TO STA. 2052+70

NOTE: STATIONING REPRESENTS THE SB LRT TRACK

K:\TWC_Transit\HCRRA\BOTTINEAU_DEIS\CADD\PLAN_SHEETS\BOTT-TYP Plymouth Ave.dwg January 08, 2013 - 3:30pm

Bottineau Transitway
DRAFT ENVIRONMENTAL IMPACT STATEMENT

Hennepin

CONSULTANTS:

Kimley-Horn and Associates, Inc.
2550 UNIVERSITY AVE. WEST, SUITE 345N
ST. PAUL, MINNESOTA 55114
TEL. NO. (651) 645-4197
FAX. NO. (651) 645-5116

SRF Consulting Group, Inc.

LTK Engineering Services

DRAWING NAME	BOTT-TYP Plymouth Ave.dwg
DESIGNED BY:	
DRAWN BY:	
CHECKED BY:	
DATE:	9/5/2012
PROJECT NO.	160528003.4.100

BOTTINEAU CORRIDOR
DRAFT EIS
CONCEPTUAL DESIGN

LRT ALIGNMENT D1
SHEET 16 OF 18

TYPICAL SECTION D1-8

ELEMENTS OF NEW T.H. 55 WESTBOUND BRIDGE
- BRIDGE STRUCTURE
- RETAINING WALLS (MSE)
  - ONE WALL ON WEST ABUTMENT
  - ONE WALL ON EAST ABUTMENT
- RETAINING WALLS (SHEET PILE)
  - ONE WALL ON EAST ABUTMENT OF EXISTING T.H. 55 EASTBOUND BRIDGE

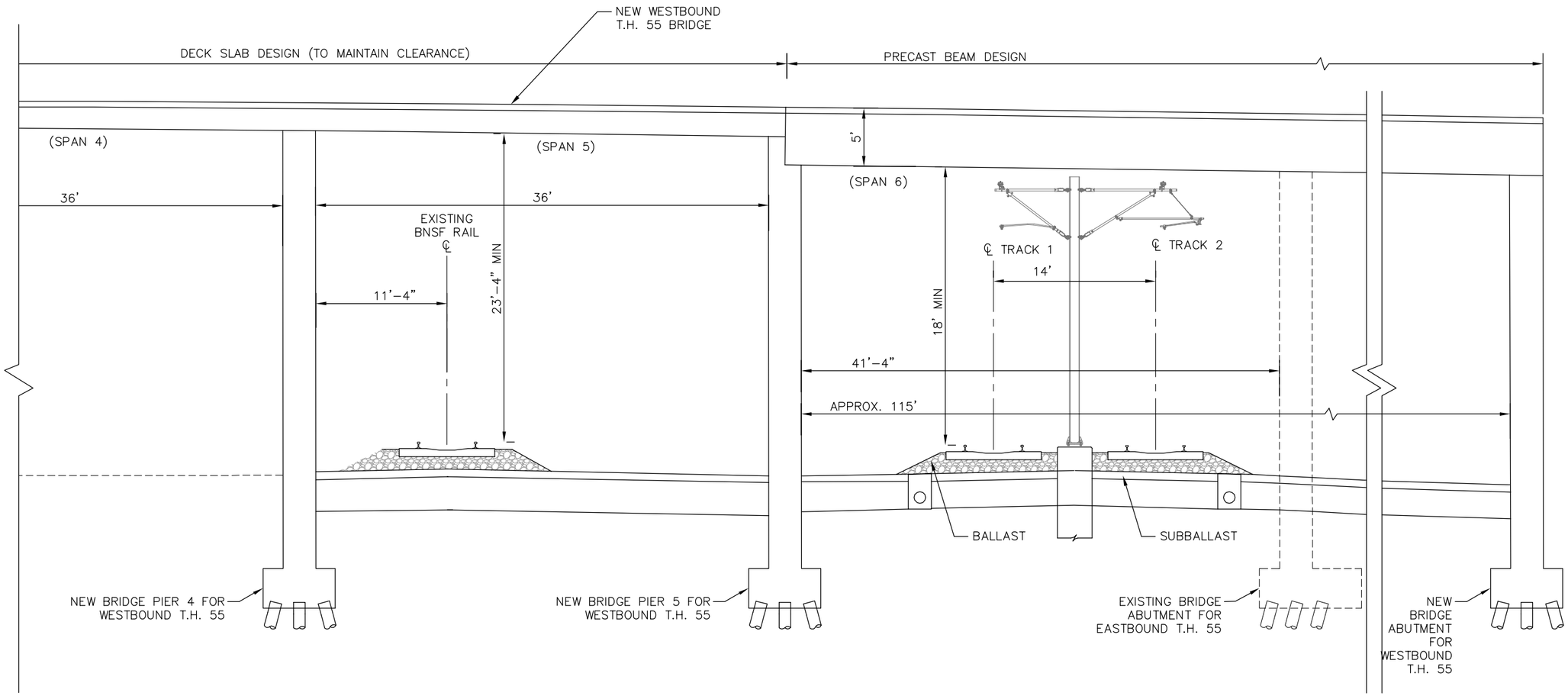

TYPICAL SECTION D1-9
T.H. 55 Bridge
STA. 2020+00 TO STA. 2025+00

NOTE: STATIONING REPRESENTS THE SB LRT TRACK

Bottineau Transitway
DRAFT ENVIRONMENTAL IMPACT STATEMENT

Hennepin

CONSULTANTS:

Kimley-Horn and Associates, Inc.
2550 UNIVERSITY AVE. WEST, SUITE 345N
ST. PAUL, MINNESOTA 55114
TEL. NO. (651) 645-4197
FAX NO. (651) 645-5116

SRF Consulting Group, Inc.

LTK Engineering Services

DRAWING NAME	BOTT-TYP T.H. 55 Bridge.dwg
DESIGNED BY:	
DRAWN BY:	
CHECKED BY:	
DATE:	9/5/2012
PROJECT NO.	160528003.4.100

BOTTINEAU CORRIDOR
DRAFT EIS
CONCEPTUAL DESIGN

LRT ALIGNMENT D1
SHET 17 OF 18

TYPICAL SECTION D1-9

SHEET NUMBER
92 OF 122

K:\TWC_Transit\HCRRA\BOTTINEAU_DEIS\CADD\PLAN_SHEETS\BOTT-TYP T.H. 55 Bridge.dwg January 08, 2013 - 2:48pm

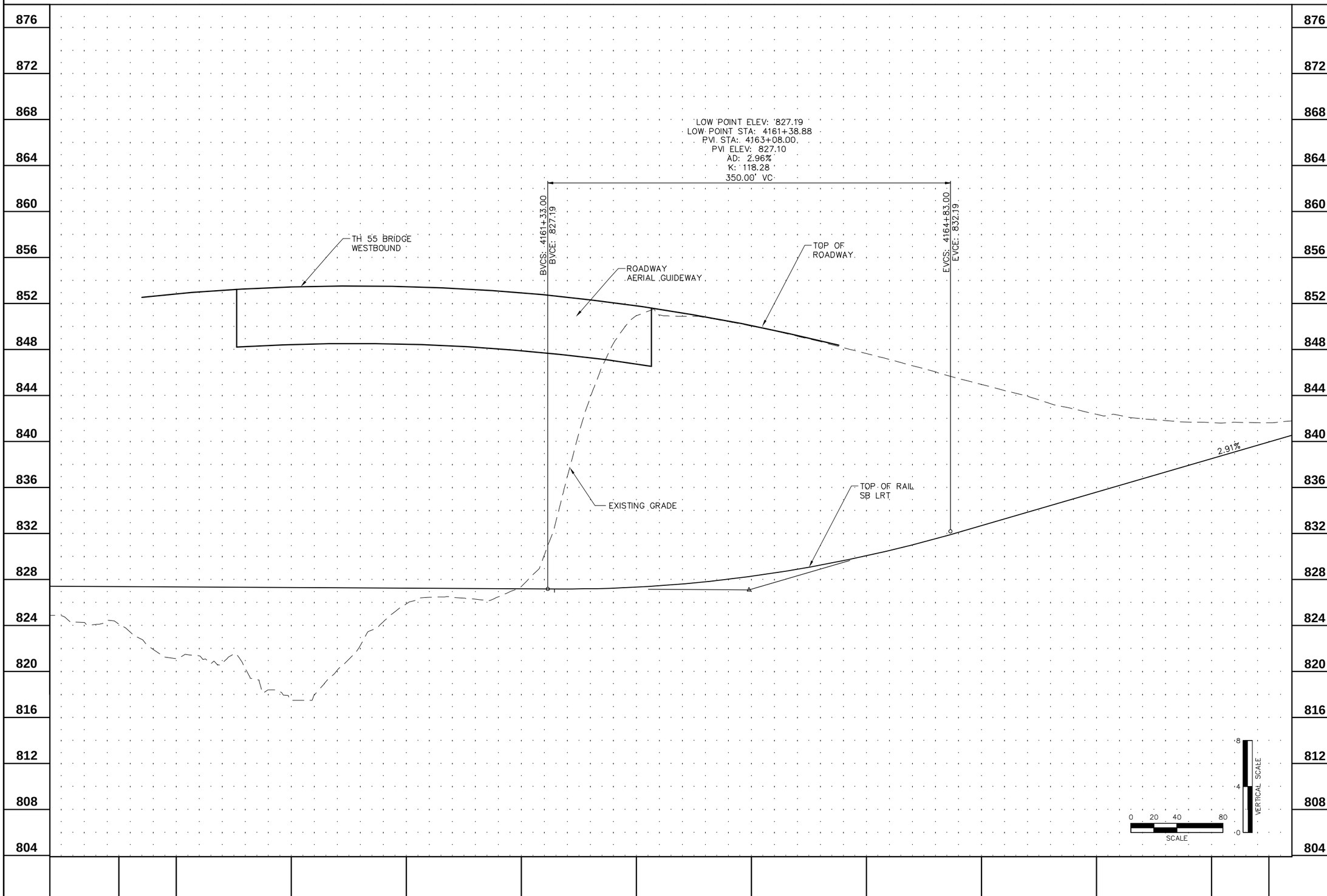

K:\TWC_Transit\HCRRA\BOTTINEAU_DEIS\CADD\PLAN_SHEETS\Profile\BOTT-PRF-D1-01.dwg September 05, 2012 - 9:25pm

Bottineau Transitway
DRAFT ENVIRONMENTAL IMPACT STATEMENT

Hennepin

CONSULTANTS:

Kimley-Horn and Associates, Inc.
2550 UNIVERSITY AVE. WEST, SUITE 345N
ST. PAUL, MINNESOTA 55114
TEL. NO. (651) 645-4197
FAX. NO. (651) 645-5116

SRF Consulting Group, Inc.

LTK Engineering Services

DRAWING NAME	BOTT-PRF-D1-01.dwg
DESIGNED BY:	
DRAWN BY:	
CHECKED BY:	
DATE:	9/5/2012
PROJECT NO.	160528003.4.100

BOTTINEAU CORRIDOR
DRAFT EIS
CONCEPTUAL DESIGN

ALIGNMENT D1
CRITICAL PROFILE
LRT CROSSING WB TH 55
SHEET 14 OF 18

CRITICAL PROFILE

K:\TWC_Transit\HCRRA\BOTTINEAU_DEIS\CADD\PLAN_SHEETS\LRTD2P01.dwg September 05, 2012 - 8:46pm

Bottineau Transitway
DRAFT ENVIRONMENTAL IMPACT STATEMENT

Hennepin

CONSULTANTS:

Kimley-Horn and Associates, Inc.
2550 UNIVERSITY AVE. WEST, SUITE 345N
ST. PAUL, MINNESOTA 55114
TEL. NO. (651) 645-4197
FAX. NO. (651) 645-5116

SRF Consulting Group, Inc.

LTK Engineering Services

DRAWING NAME	LRTD2P01.dwg
DESIGNED BY:	
DRAWN BY:	
CHECKED BY:	
DATE:	9/5/2012
PROJECT NO.	160528003.4.100

SCALE
0 100' 200'

BOTTINEAU TRANSITWAY
DRAFT EIS
CONCEPTUAL DESIGN

LRT ALIGNMENT D2
SHEET 1 OF 20

ALIGNMENT PLAN

STA 3139+00 - 3164+72

SHEET NUMBER
94 OF 122

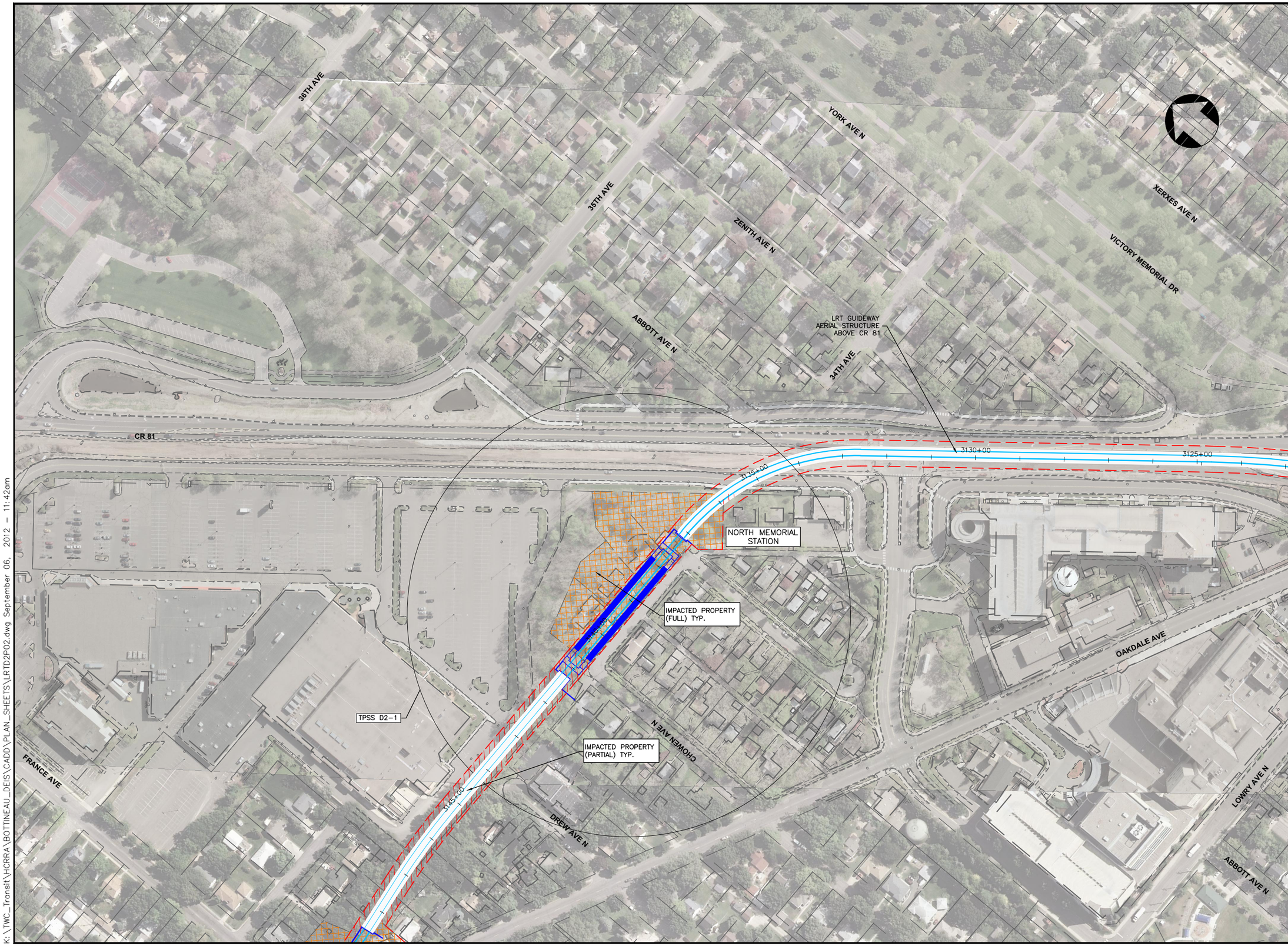

K:\TWC_Transit\HCRRA\BOTTINEAU_DEIS\CADD\PLAN_SHEETS\LRTD2P02.dwg September 06, 2012 – 11:42am

Bottineau Transitway
DRAFT ENVIRONMENTAL IMPACT STATEMENT

Hennepin

CONSULTANTS:

Kimley-Horn and Associates, Inc.
2550 UNIVERSITY AVE. WEST, SUITE 345N
ST. PAUL, MINNESOTA 55114
TEL. NO. (651) 645-4197
FAX. NO. (651) 645-5116

SRF Consulting Group, Inc.

LTK Engineering Services

DRAWING NAME	LRTD2P02.dwg
DESIGNED BY:	
DRAWN BY:	
CHECKED BY:	
DATE:	9/5/2012
PROJECT NO.	160528003.4.100

SCALE
0 100' 200'

BOTTINEAU TRANSITWAY
DRAFT EIS
CONCEPTUAL DESIGN

LRT ALIGNMENT D2
SHEET 2 OF 20

ALIGNMENT PLAN

STA 3123+00 - 3148+00

SHEET NUMBER
95 OF 122

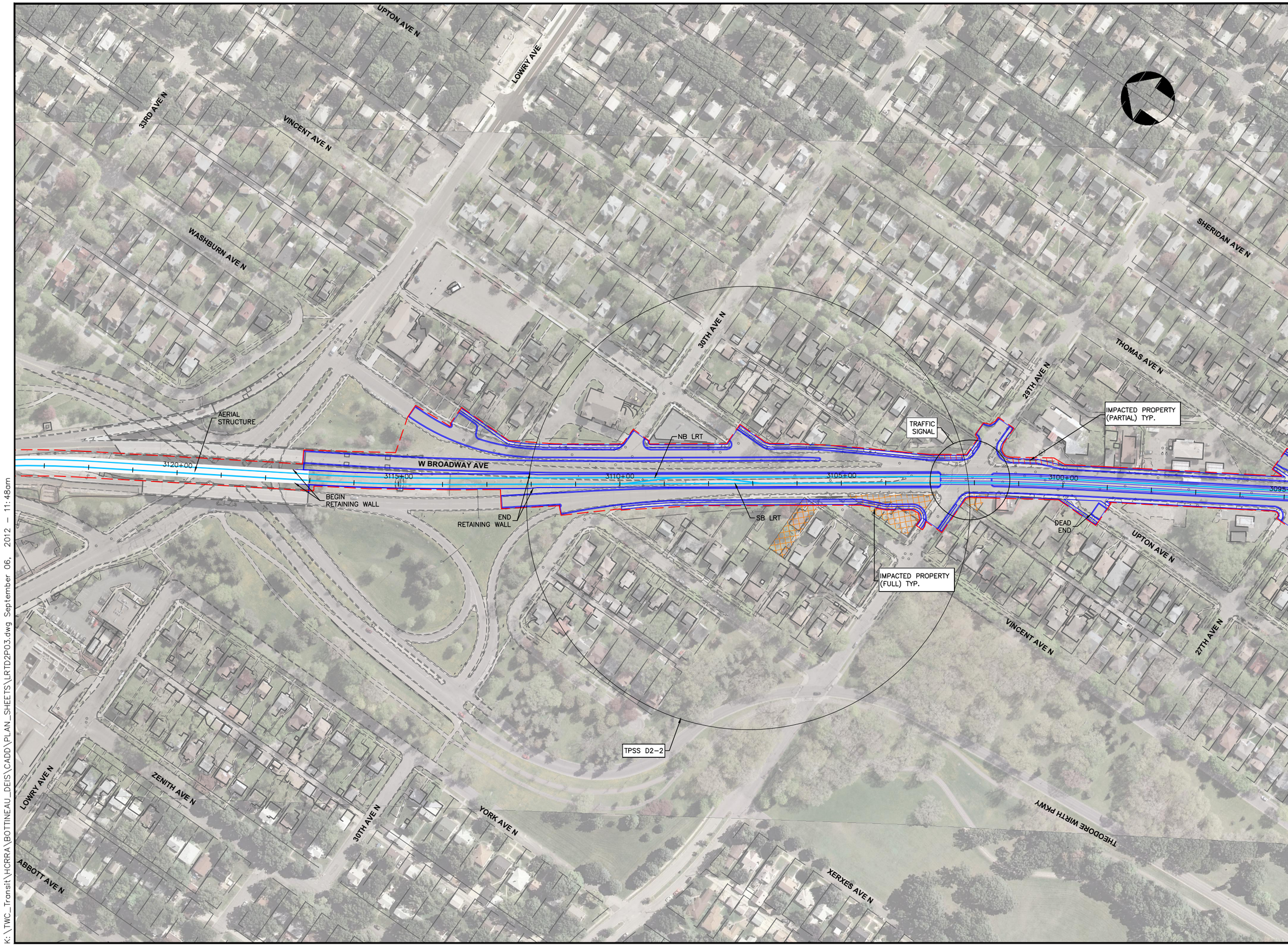

K:\TWC_Transit\HCRRA\BOTTINEAU_DEIS\CADD\PLAN_SHEETS\LRTD2P03.dwg September 06, 2012 – 11:48am

Bottineau Transitway
DRAFT ENVIRONMENTAL IMPACT STATEMENT

Hennepin

CONSULTANTS:

Kimley-Horn and Associates, Inc.
2550 UNIVERSITY AVE. WEST, SUITE 345N
ST. PAUL, MINNESOTA 55114
TEL. NO. (651) 645-4197
FAX. NO. (651) 645-5116

SRF Consulting Group, Inc.

LTK Engineering Services

DRAWING NAME	LRTD2P03.dwg
DESIGNED BY:	
DRAWN BY:	
CHECKED BY:	
DATE:	9/5/2012
PROJECT NO.	160528003.4.100

SCALE
0 100' 200'

BOTTINEAU TRANSITWAY
DRAFT EIS
CONCEPTUAL DESIGN

LRT ALIGNMENT D2
SHEET 3 OF 20

ALIGNMENT PLAN

STA 3095+00 - 3123+00

SHEET NUMBER
96 OF 122

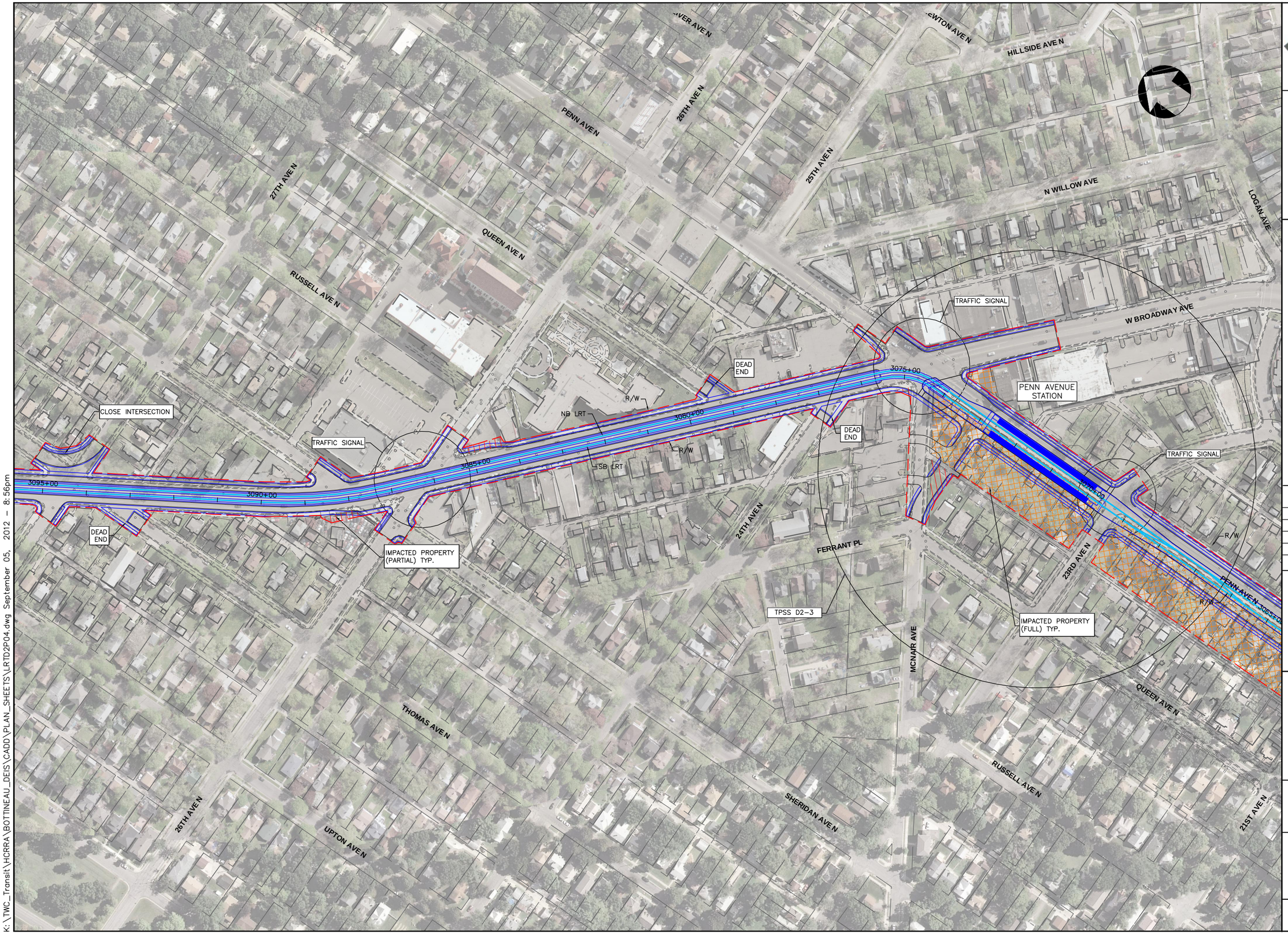

K:\TWC_Transit\HCRRA\BOTTINEAU_DEIS\CADD\PLAN_SHEETS\LRTD2P04.dwg September 05, 2012 - 8:56pm

Bottineau Transitway
DRAFT ENVIRONMENTAL IMPACT STATEMENT

Hennepin

CONSULTANTS:

Kimley-Horn and Associates, Inc.
2550 UNIVERSITY AVE. WEST, SUITE 345N
ST. PAUL, MINNESOTA 55114
TEL. NO. (651) 645-4197
FAX. NO. (651) 645-5116

SRF Consulting Group, Inc.

LTK Engineering Services

DRAWING NAME	LRTD2P04.dwg
DESIGNED BY:	
DRAWN BY:	
CHECKED BY:	
DATE:	9/5/2012
PROJECT NO.	160528003.4.100

SCALE
0 100' 200'

BOTTINEAU TRANSITWAY
DRAFT EIS
CONCEPTUAL DESIGN

LRT ALIGNMENT D2
SHEET 4 OF 20

ALIGNMENT PLAN

STA 3065+00 - 3095+00

SHEET NUMBER
97 OF 122

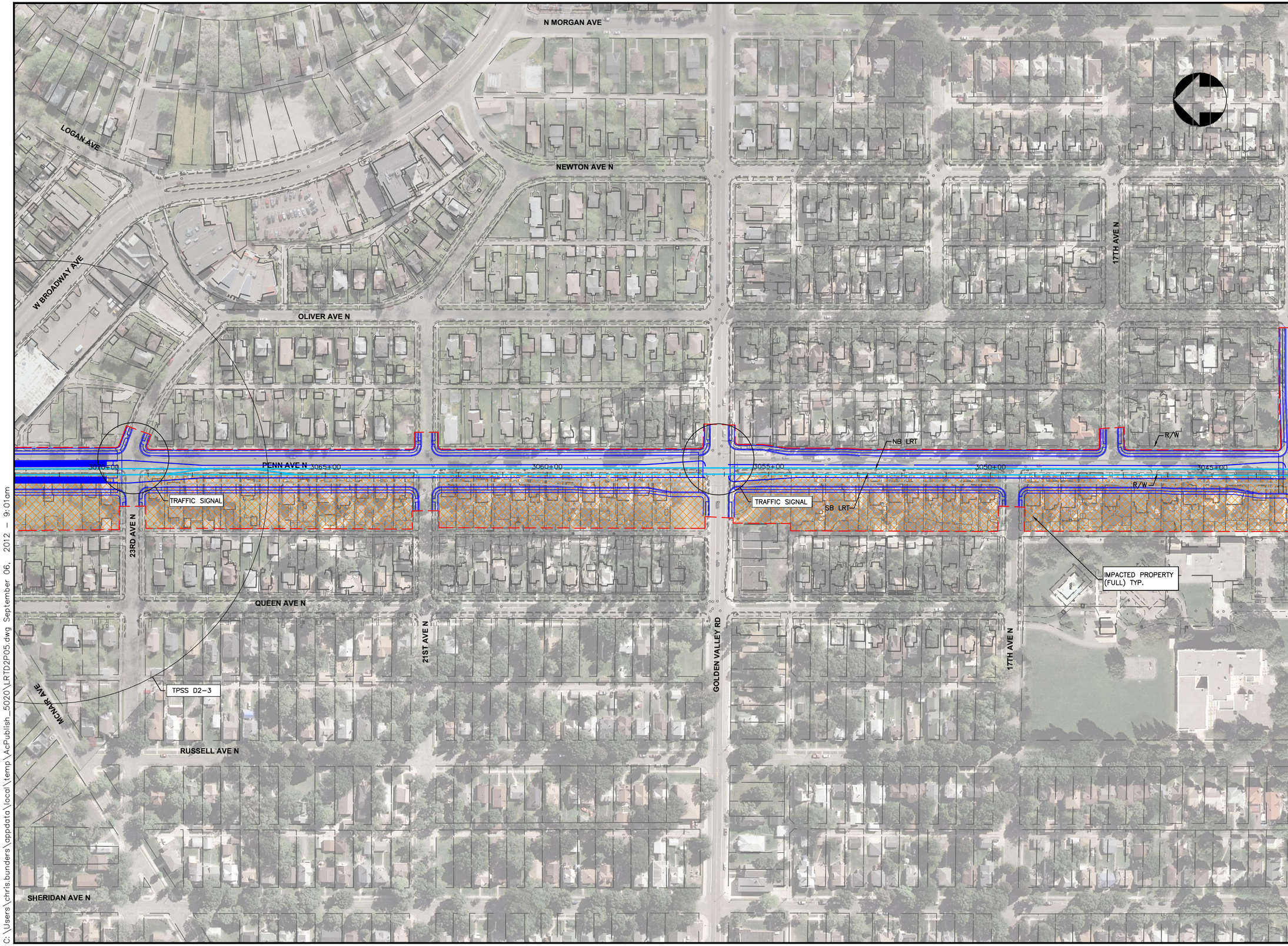

C:\Users\chris.bunders\appdata\local\temp\AcPublish_5020\LRTD2P05.dwg September 06, 2012 - 9:01am

Bottineau Transitway
DRAFT ENVIRONMENTAL IMPACT STATEMENT

Hennepin

CONSULTANTS:

Kimley-Horn and Associates, Inc.
2550 UNIVERSITY AVE. WEST, SUITE 345N
ST. PAUL, MINNESOTA 55114
TEL. NO. (651) 645-4197
FAX. NO. (651) 645-5116

SRF Consulting Group, Inc.

LTK Engineering Services

DRAWING NAME	LRTD2P05.dwg
DESIGNED BY:	
DRAWN BY:	
CHECKED BY:	
DATE:	9/5/2012
PROJECT NO.	160528003.4.100

SCALE
0 100' 200'

BOTTINEAU TRANSITWAY
DRAFT EIS
CONCEPTUAL DESIGN

LRT ALIGNMENT D2
SHEET 5 OF 20

ALIGNMENT PLAN

STA 3044+00 - 3071+00

SHEET NUMBER
98 OF 122

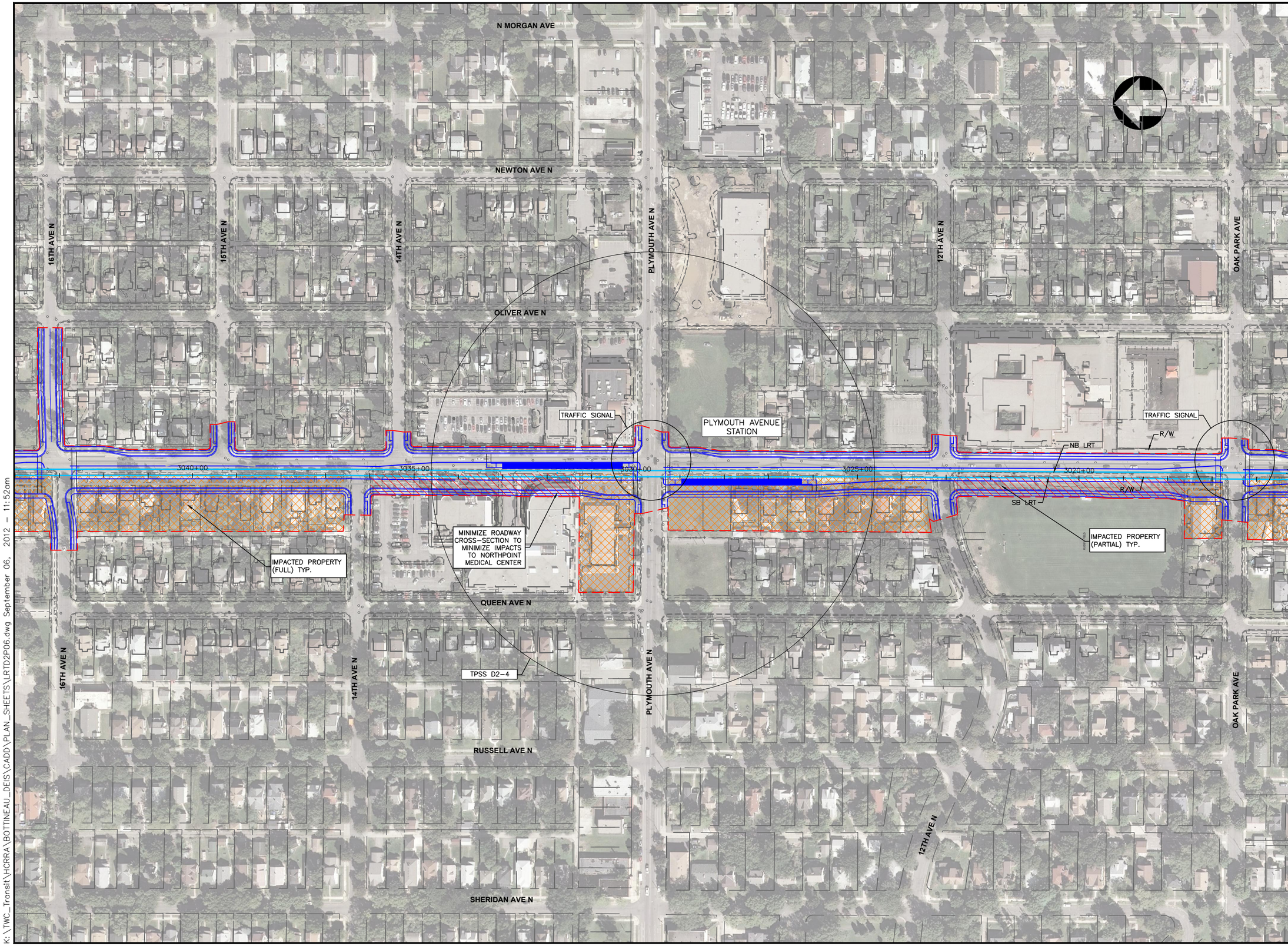

K:\TWC_Transit\HCRRA\BOTTINEAU_DEIS\CADD\PLAN_SHEETS\LRTD2P06.dwg September 06, 2012 - 11:52am

Bottineau Transitway
DRAFT ENVIRONMENTAL IMPACT STATEMENT

Hennepin

CONSULTANTS:

Kimley-Horn and Associates, Inc.
2550 UNIVERSITY AVE. WEST, SUITE 345N
ST. PAUL, MINNESOTA 55114
TEL. NO. (651) 645-4197
FAX. NO. (651) 645-5116

SRF Consulting Group, Inc.

LTK Engineering Services

DRAWING NAME	LRTD2P06.dwg
DESIGNED BY:	
DRAWN BY:	
CHECKED BY:	
DATE:	9/5/2012
PROJECT NO.	160528003.4.100

SCALE
0 100' 200'

BOTTINEAU TRANSITWAY
DRAFT EIS
CONCEPTUAL DESIGN

LRT ALIGNMENT D2
SHEET 6 OF 20

ALIGNMENT PLAN

STA 3016+00 - 3044+00

SHEET NUMBER
99 OF 122

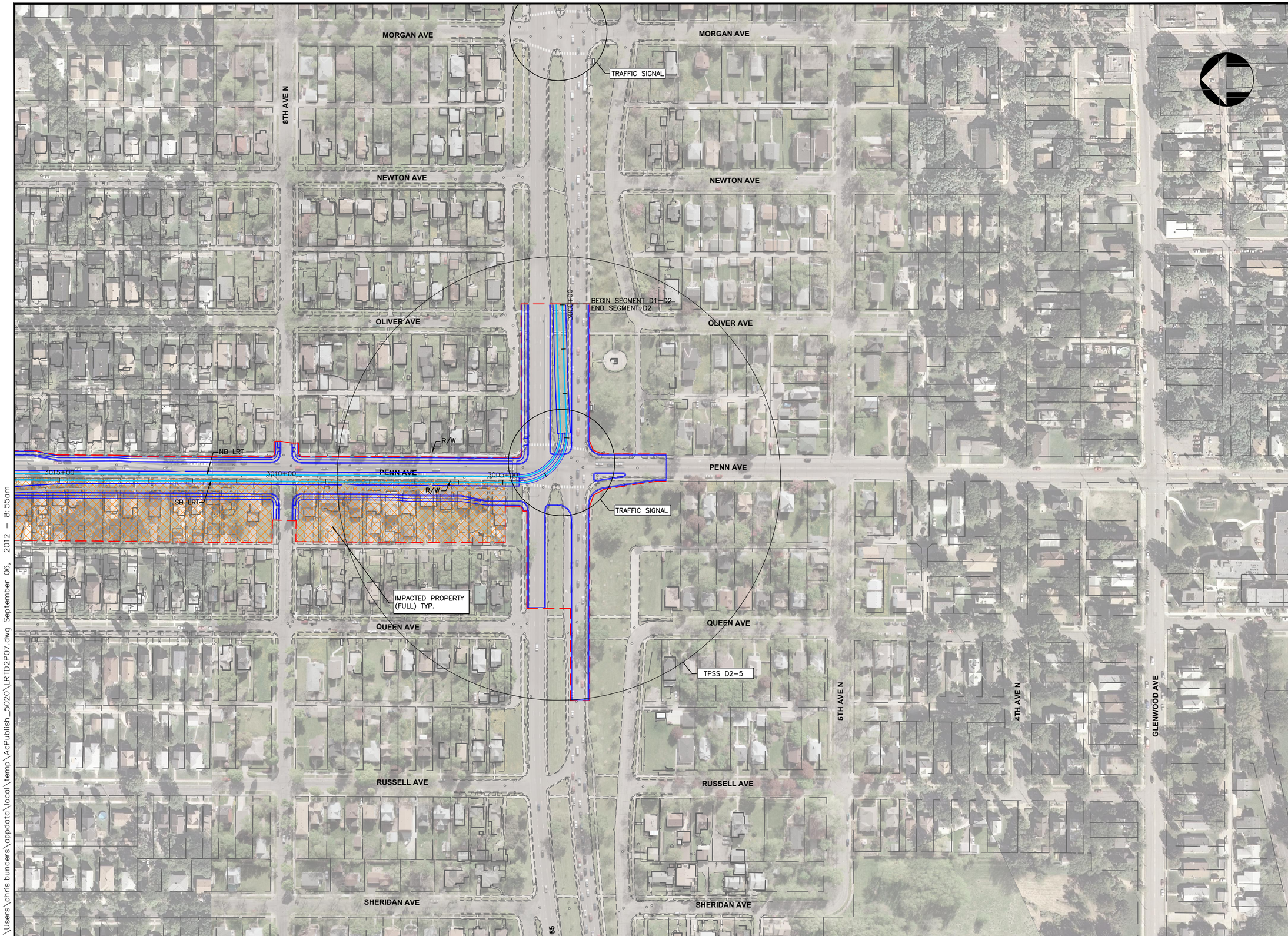

C:\Users\chris.bunders\appdata\local\temp\AcPublish_5020\LRTD2P07.dwg September 06, 2012 – 8:55am

Bottineau Transitway
DRAFT ENVIRONMENTAL IMPACT STATEMENT

Hennepin

CONSULTANTS:

Kimley-Horn and Associates, Inc.
2550 UNIVERSITY AVE. WEST, SUITE 345N
ST. PAUL, MINNESOTA 55114
TEL. NO. (651) 645–4197
FAX. NO. (651) 645–5116

SRF Consulting Group, Inc.

LTK Engineering Services

DRAWING NAME	LRTD2P07.dwg
DESIGNED BY:	
DRAWN BY:	
CHECKED BY:	
DATE:	9/5/2012
PROJECT NO.	160528003.4.100

SCALE
0 100' 200'

BOTTINEAU TRANSITWAY
DRAFT EIS
CONCEPTUAL DESIGN

LRT ALIGNMENT D2
SHEET 7 OF 20

ALIGNMENT PLAN

STA 3000+00 - 3016+00

SHEET NUMBER
100 OF 122

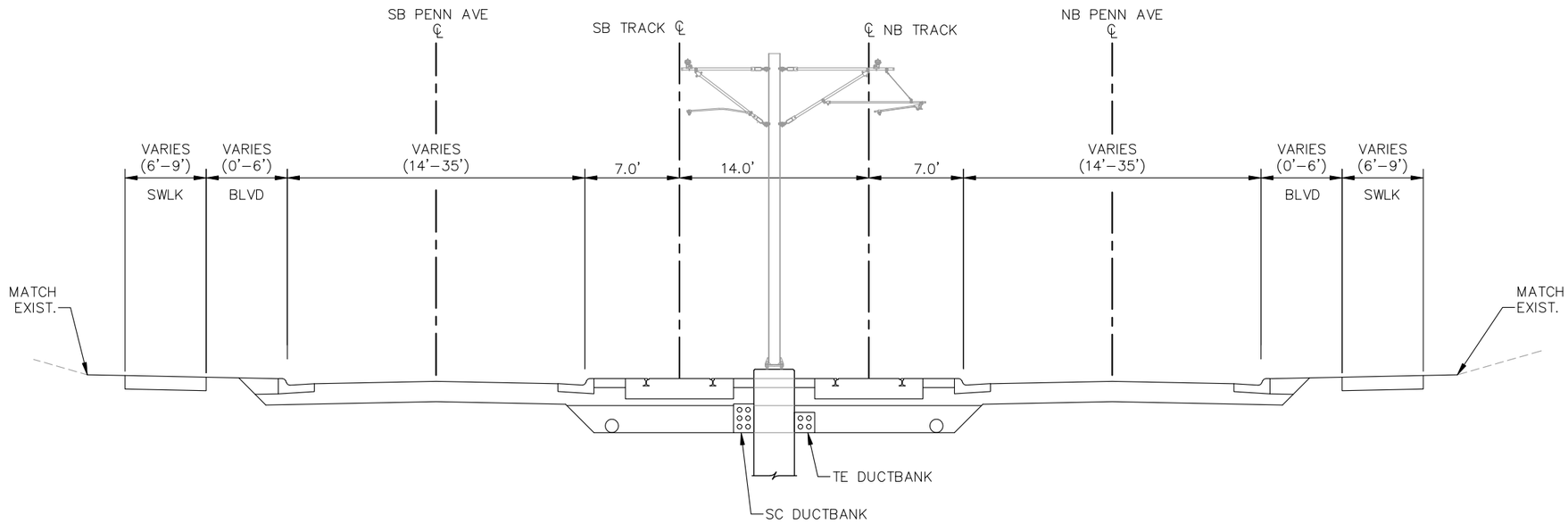

TYPICAL SECTION D2-01
ALIGNMENT D2 - STA. 3005+00 TO STA. 3075+00

P:\Projects\C4147.02 – Bottineau DEIS\C3D\BOTT–TYP D2_01.dwg August 24, 2012 – 9:32am

Bottineau Transitway
DRAFT ENVIRONMENTAL IMPACT STATEMENT

Hennepin

CONSULTANTS:

Kimley-Horn and Associates, Inc.
2550 UNIVERSITY AVE. WEST, SUITE 345N
ST. PAUL, MINNESOTA 55114
TEL. NO. (651) 645–4197
FAX. NO. (651) 645–5116

SRF Consulting Group, Inc.

LTK Engineering Services

DRAWING NAME	BOTT–TYP D2_01.dwg
DESIGNED BY:	
DRAWN BY:	
CHECKED BY:	
DATE:	6/29/12
PROJECT NO.	160528003.4.100

BOTTINEAU CORRIDOR
DRAFT EIS
CONCEPTUAL DESIGN

LRT ALIGNMENT D2
SHEET 8 OF 20

TYPICAL SECTION D2-01

SHEET NUMBER
101 OF 122

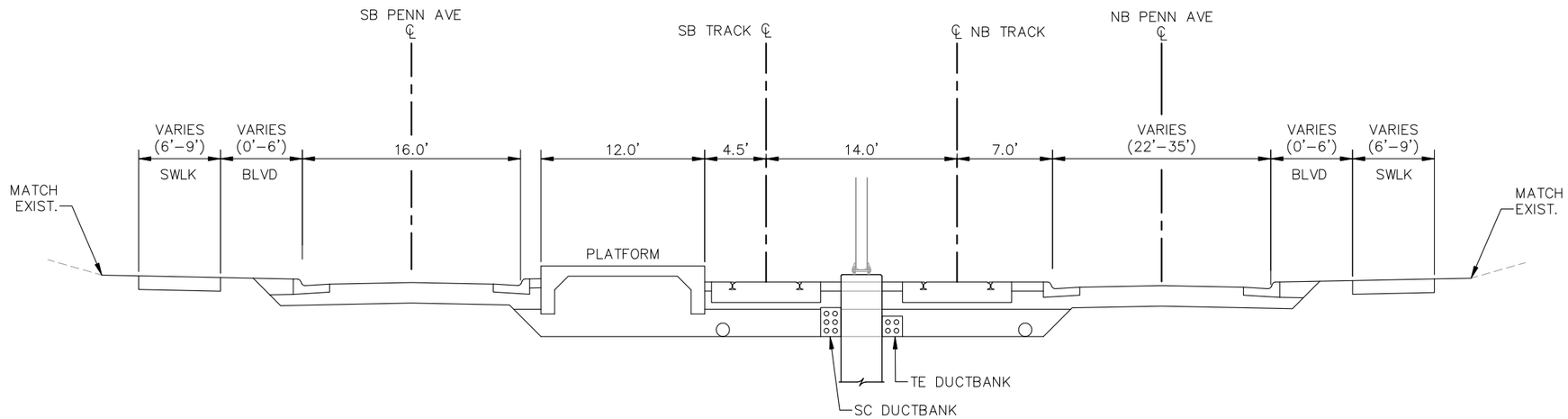

TYPICAL SECTION D2-01A
ALIGNMENT D2 - PLYMOUTH AVENUE STATION
(SB PLATFORM SHOWN, NB SIMILAR)

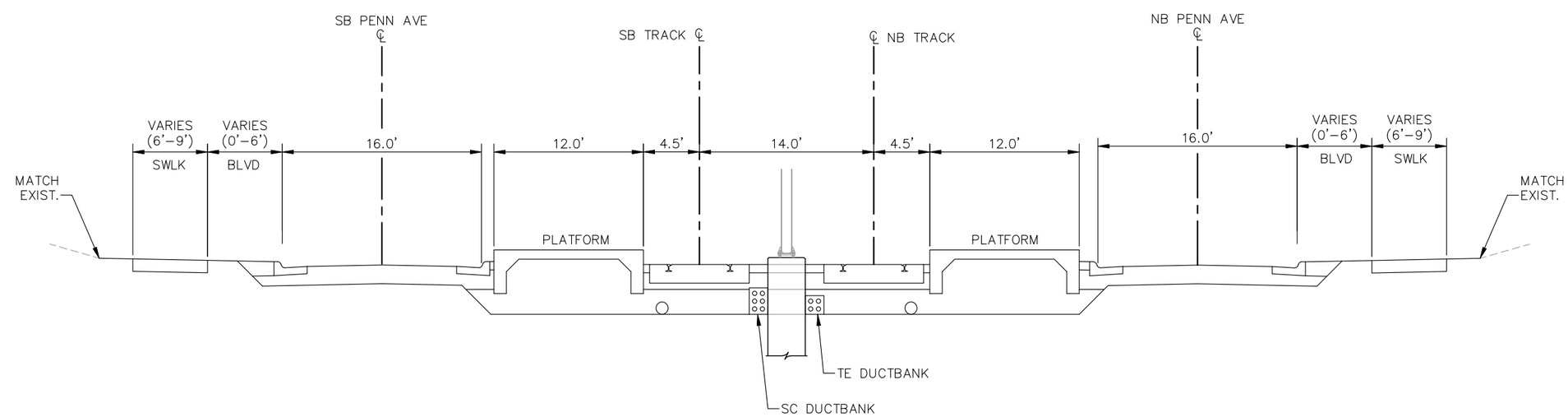

TYPICAL SECTION D2-01B
ALIGNMENT D2 - BROADWAY / PENN STATION

BottineauTransitway
DRAFT ENVIRONMENTAL IMPACT STATEMENT

Hennepin

CONSULTANTS:

Kimley-Horn and Associates, Inc.
2550 UNIVERSITY AVE. WEST, SUITE 345N
ST. PAUL, MINNESOTA 55114
TEL. NO. (651) 645-4197
FAX. NO. (651) 645-5116

SRF Consulting Group, Inc.

LTK Engineering Services

DRAWING NAME	BOTT–TYP D2_01AB.dwg
DESIGNED BY:	
DRAWN BY:	
CHECKED BY:	
DATE:	6/29/12
PROJECT NO.	160528003.4.100

BOTTINEAU CORRIDOR
DRAFT EIS
CONCEPTUAL DESIGN

LRT ALIGNMENT D2
SHEET 9 OF 20

TYPICAL SECTION D2-01AB

SHEET NUMBER
102 OF 122

P:\Projects\C4147.02 – Bottineau DEIS\C3D\BOTT–TYP D2_01AB.dwg August 24, 2012 – 9:32am

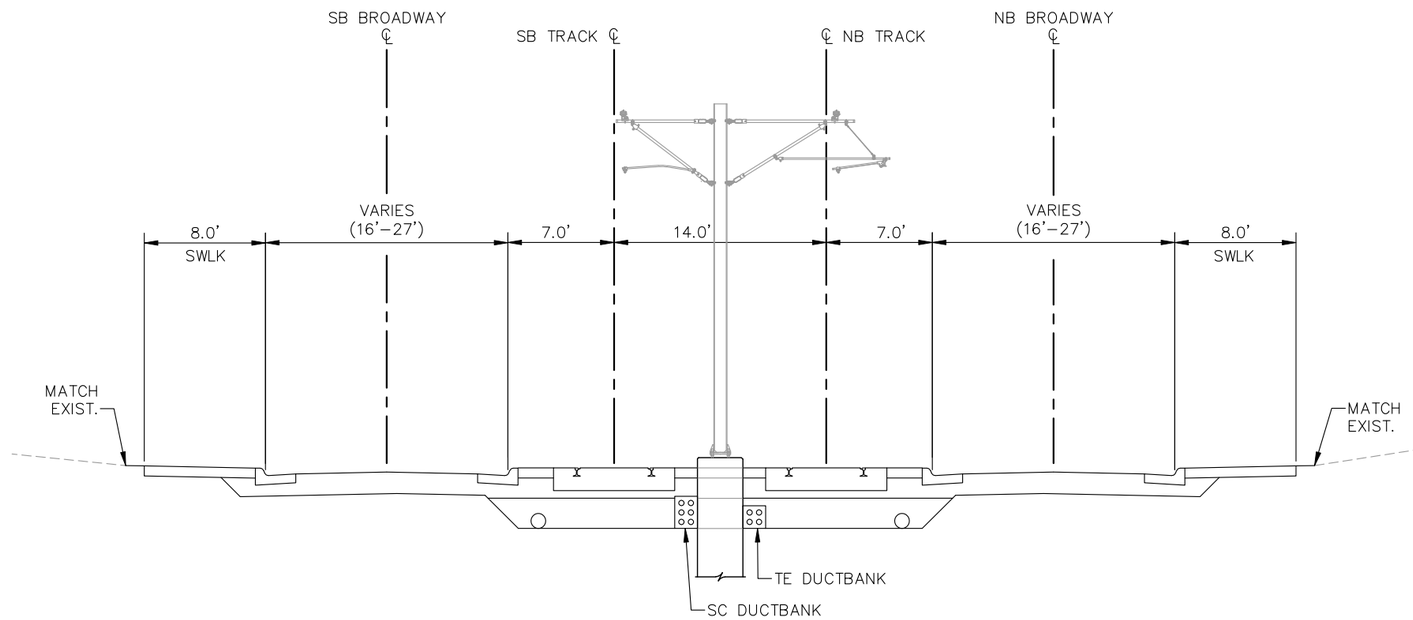

TYPICAL SECTION D2-02
ALIGNMENT D2 - STA. 3075+00 TO STA. 3103+00

P:\Projects\C4147.02 – Bottineau DEIS\C3D\BOTT-TYP D2_02.dwg August 24, 2012 – 9:32am

Bottineau Transitway
DRAFT ENVIRONMENTAL IMPACT STATEMENT

Hennepin

CONSULTANTS:

Kimley-Horn and Associates, Inc.
2550 UNIVERSITY AVE. WEST, SUITE 345N
ST. PAUL, MINNESOTA 55114
TEL. NO. (651) 645-4197
FAX. NO. (651) 645-5116

SRF Consulting Group, Inc.

LTK Engineering Services

DRAWING NAME	BOTT-TYP D2_02.dwg
DESIGNED BY:	
DRAWN BY:	
CHECKED BY:	
DATE:	6/29/12
PROJECT NO.	160528003.4.100

BOTTINEAU CORRIDOR
DRAFT EIS
CONCEPTUAL DESIGN

LRT ALIGNMENT D2
SHEET 10 OF 20

TYPICAL SECTION D2-02

SHEET NUMBER
103 OF 122

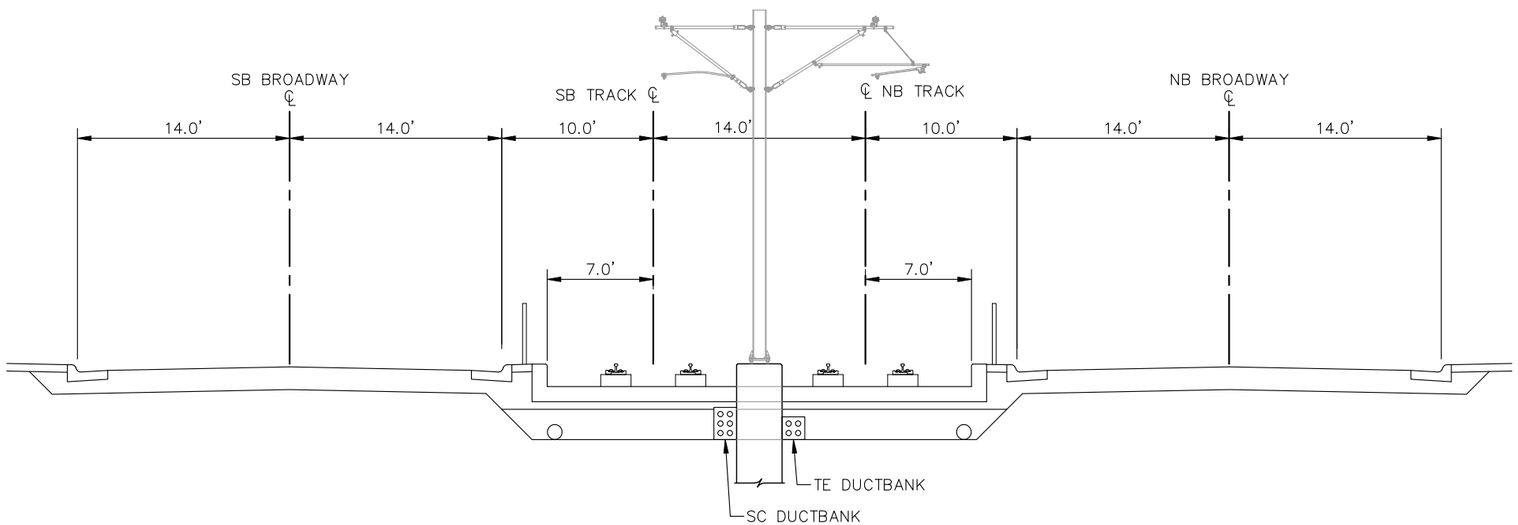

TYPICAL SECTION D2-03
ALIGNMENT D2 - STA. 3103+00 TO STA. 3117+00

P:\Projects\C4147.02 - Bottineau DEIS\C3D\BOTT-TYP D2_03.dwg August 24, 2012 - 9:32am

BottineauTransitway
DRAFT ENVIRONMENTAL IMPACT STATEMENT

Hennepin

CONSULTANTS:

Kimley-Horn and Associates, Inc.
2550 UNIVERSITY AVE. WEST, SUITE 345N
ST. PAUL, MINNESOTA 55114
TEL. NO. (651) 645-4197
FAX. NO. (651) 645-5116

SRF Consulting Group, Inc.

LTK Engineering Services

DRAWING NAME	BOTT-TYP D2_03.dwg
DESIGNED BY:	
DRAWN BY:	
CHECKED BY:	
DATE:	6/29/12
PROJECT NO.	160528003.4.100

BOTTINEAU CORRIDOR
DRAFT EIS
CONCEPTUAL DESIGN

LRT ALIGNMENT D2
SHEET 11 OF 20

TYPICAL SECTION D2-03

SHEET NUMBER
104 OF 122

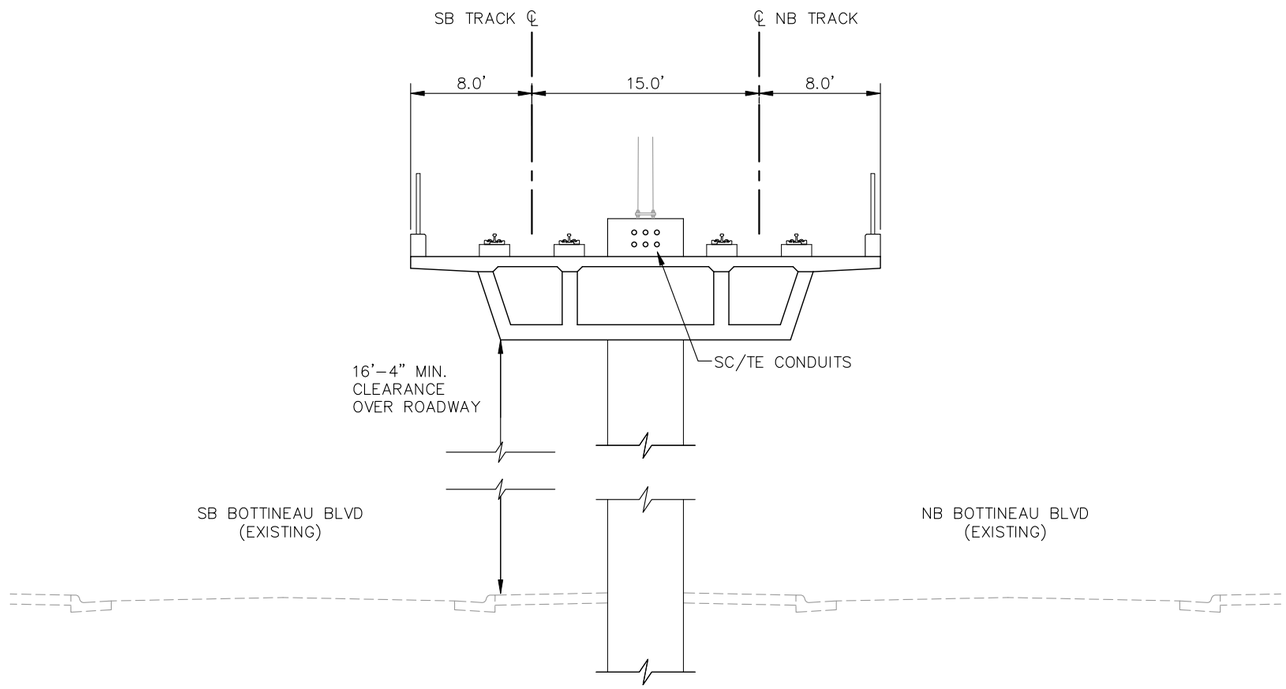

TYPICAL SECTION D2-04
ALIGNMENT D2 - STA. 3117+00 TO STA. 3137+00

Bottineau Transitway
DRAFT ENVIRONMENTAL IMPACT STATEMENT

Hennepin

CONSULTANTS:

Kimley-Horn and Associates, Inc.
2550 UNIVERSITY AVE. WEST, SUITE 345N
ST. PAUL, MINNESOTA 55114
TEL. NO. (651) 645-4197
FAX. NO. (651) 645-5116

SRF Consulting Group, Inc.

LTK Engineering Services

DRAWING NAME	BOTT-TYP D2_04.dwg
DESIGNED BY:	
DRAWN BY:	
CHECKED BY:	
DATE:	6/29/12
PROJECT NO.	160528003.4.100

BOTTINEAU CORRIDOR
DRAFT EIS
CONCEPTUAL DESIGN

LRT ALIGNMENT D2
SHEET 12 OF 20

TYPICAL SECTION D2-04

SHEET NUMBER
105 OF 122

P:\Projects\C4147.02 - Bottineau DEIS\C3D\BOTT-TYP D2_04.dwg August 24, 2012 - 9:32am

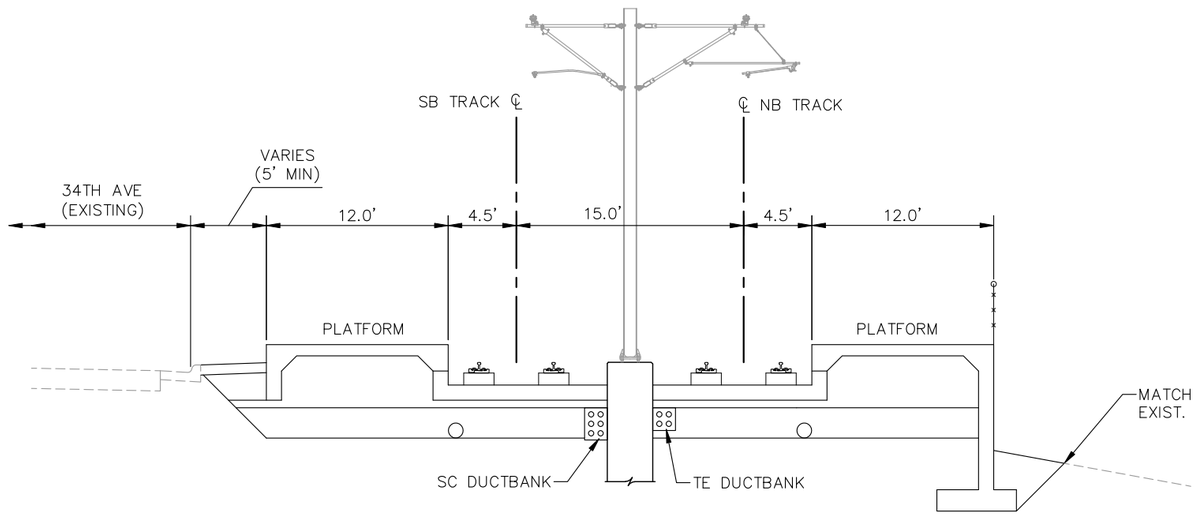

TYPICAL SECTION D2-05
ALIGNMENT D2 - STA. 3137+00 TO STA. 3141+50
NORTH MEMORIAL STATION

P:\Projects\C4147.02 - Bottineau DEIS\C3D\BOTT-TYP D2_05.dwg August 24, 2012 - 9:32am

BottineauTransitway
DRAFT ENVIRONMENTAL IMPACT STATEMENT

Hennepin

CONSULTANTS:

Kimley-Horn and Associates, Inc.
2550 UNIVERSITY AVE. WEST, SUITE 345N
ST. PAUL, MINNESOTA 55114
TEL. NO. (651) 645-4197
FAX. NO. (651) 645-5116

SRF Consulting Group, Inc.

LTK Engineering Services

DRAWING NAME	BOTT-TYP D2_05.dwg
DESIGNED BY:	
DRAWN BY:	
CHECKED BY:	
DATE:	6/29/12
PROJECT NO.	160528003.4.100

BOTTINEAU CORRIDOR
DRAFT EIS
CONCEPTUAL DESIGN

LRT ALIGNMENT D2
SHEET 13 OF 20

TYPICAL SECTION D2-05

SHEET NUMBER
106 OF 122

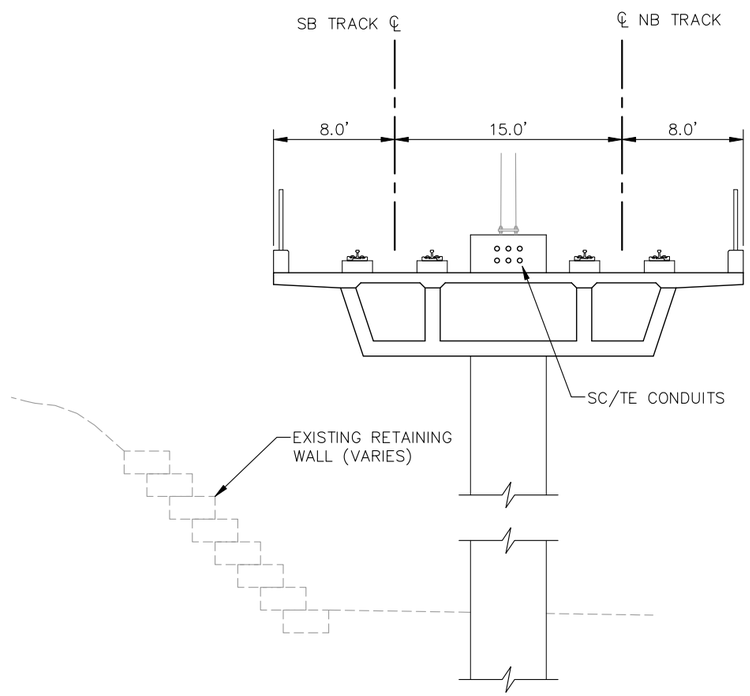

TYPICAL SECTION D2-06
ALIGNMENT D2 - STA. 3141+50 TO STA. 3150+00

P:\Projects\C4147.02 - Bottineau DEIS\C3D\BOTT-TYP D2_06.dwg August 24, 2012 - 9:33am

BottineauTransitway
DRAFT ENVIRONMENTAL IMPACT STATEMENT

Hennepin

CONSULTANTS:

Kimley-Horn and Associates, Inc.
2550 UNIVERSITY AVE. WEST, SUITE 345N
ST. PAUL, MINNESOTA 55114
TEL. NO. (651) 645-4197
FAX. NO. (651) 645-5116

SRF Consulting Group, Inc.

LTK Engineering Services

DRAWING NAME	BOTT-TYP D2_06.dwg
DESIGNED BY:	
DRAWN BY:	
CHECKED BY:	
DATE:	6/29/12
PROJECT NO.	160528003.4.100

BOTTINEAU CORRIDOR
DRAFT EIS
CONCEPTUAL DESIGN

LRT ALIGNMENT D2
SHEET 14 OF 20

TYPICAL SECTION D2-06

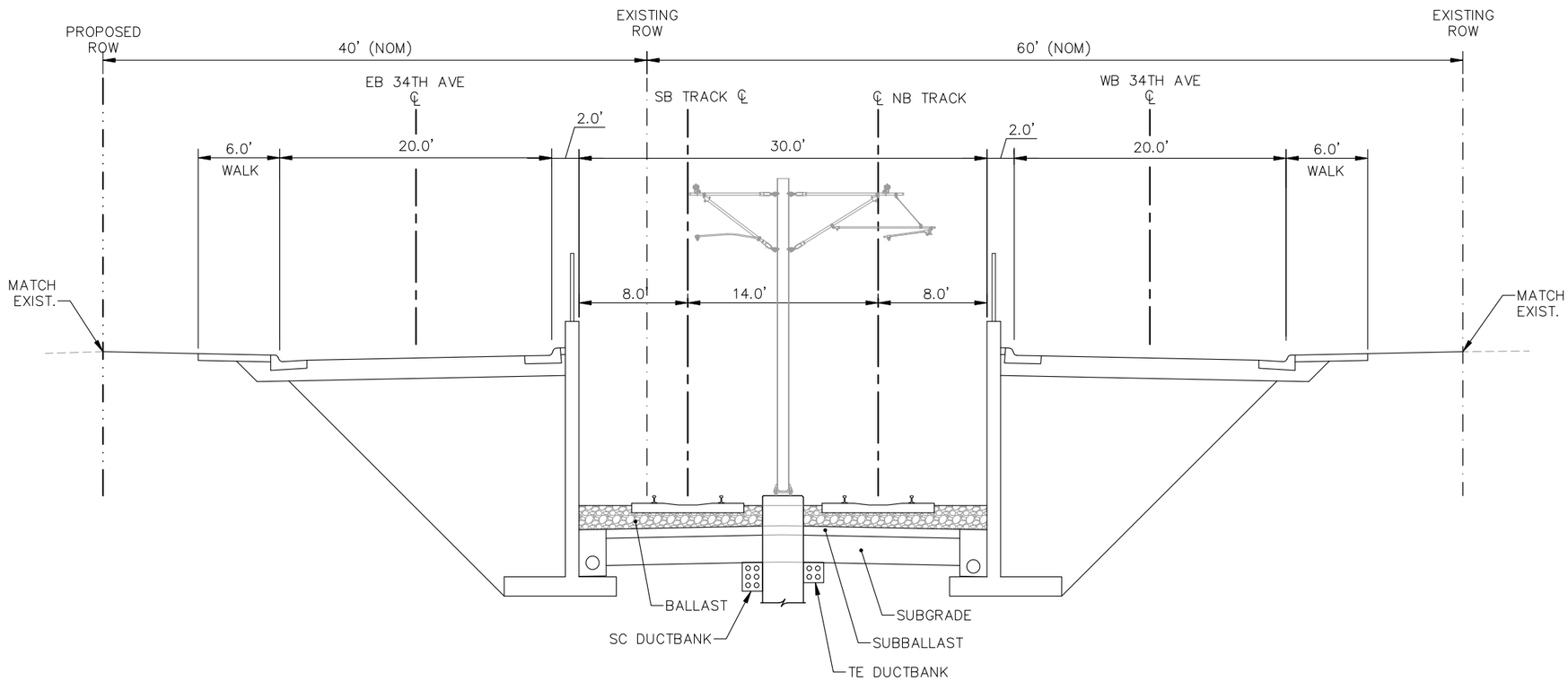

TYPICAL SECTION D2-07
ALIGNMENT D2 - STA. 3151+00 TO STA. 3159+00

P:\Projects\C4147.02 – Bottineau DEIS\C3D\BOTT–TYP D2_07.dwg August 24, 2012 – 9:33am

Bottineau Transitway
DRAFT ENVIRONMENTAL IMPACT STATEMENT

Hennepin

CONSULTANTS:

Kimley-Horn and Associates, Inc.
2550 UNIVERSITY AVE. WEST, SUITE 345N
ST. PAUL, MINNESOTA 55114
TEL. NO. (651) 645-4197
FAX. NO. (651) 645-5116

SRF Consulting Group, Inc.

LTK Engineering Services

DRAWING NAME	BOTT–TYP D2_07.dwg
DESIGNED BY:	
DRAWN BY:	
CHECKED BY:	
DATE:	6/29/12
PROJECT NO.	160528003.4.100

BOTTINEAU CORRIDOR
DRAFT EIS
CONCEPTUAL DESIGN

LRT ALIGNMENT D2
SHEET 15 OF 20

TYPICAL SECTION D2-07

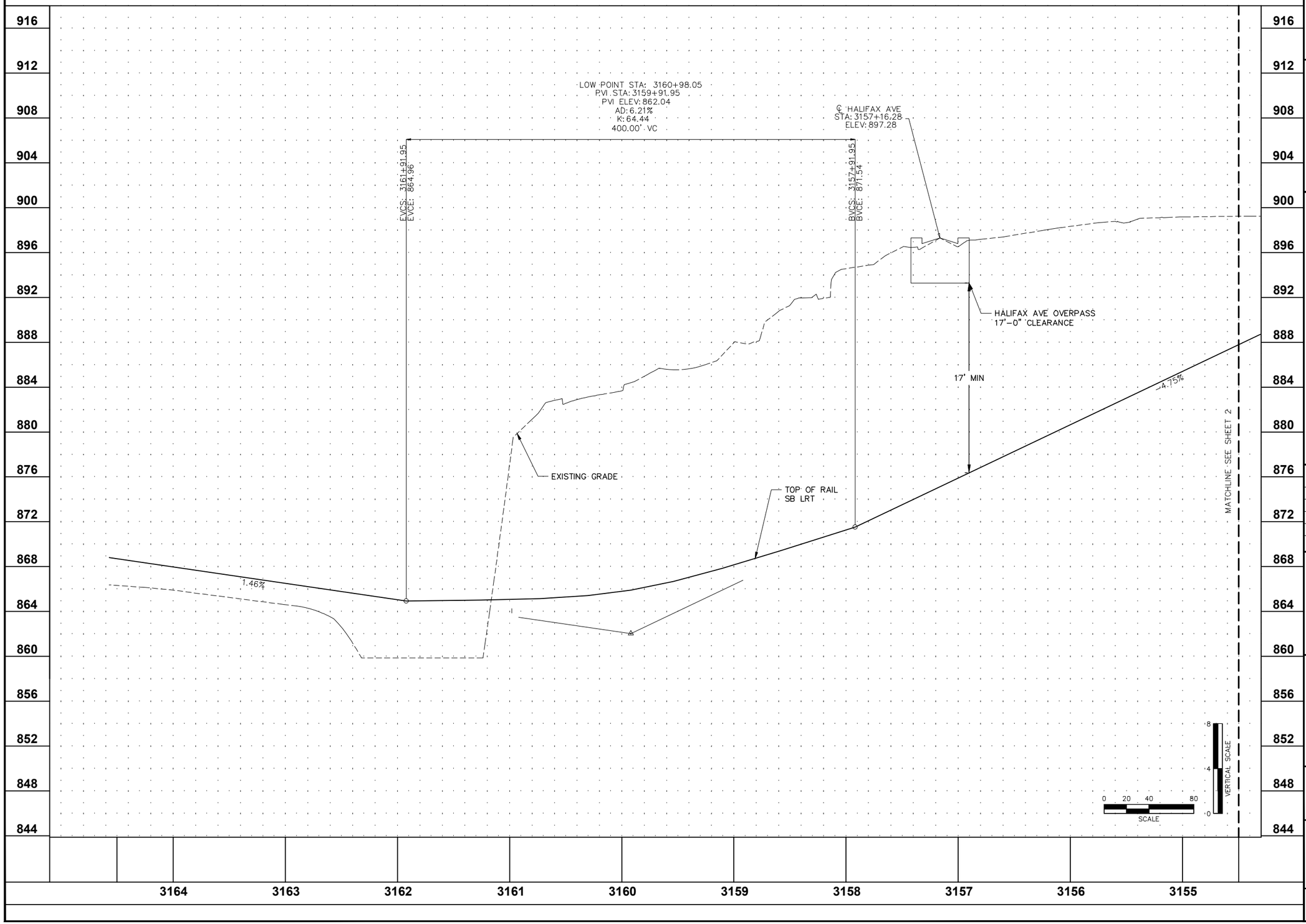

Bottineau Transitway
DRAFT ENVIRONMENTAL IMPACT STATEMENT

Hennepin

CONSULTANTS:

Kimley-Horn and Associates, Inc.
2550 UNIVERSITY AVE. WEST, SUITE 345N
ST. PAUL, MINNESOTA 55114
TEL. NO. (651) 645-4197
FAX. NO. (651) 645-5116

SRF Consulting Group, Inc.

LTK Engineering Services

DRAWING NAME	BOTT-PRF-D2-01.dwg
DESIGNED BY:	
DRAWN BY:	
CHECKED BY:	
DATE:	9/5/2012
PROJECT NO.	160528003.4.100

BOTTINEAU CORRIDOR
DRAFT EIS
CONCEPTUAL DESIGN

ALIGNMENT D2
CRITICAL PROFILE
HALIFAX AVE OVERPASS
SHEET 16 OF 20

CRITICAL PROFILE

SHEET NUMBER
109 OF 122

K:\TWC_Transit\HCRRA\BOTTINEAU_DEIS\CADD\PLAN_SHEETS\Profile\BOTT-PRF-D2-01.dwg September 06, 2012 - 2:19pm

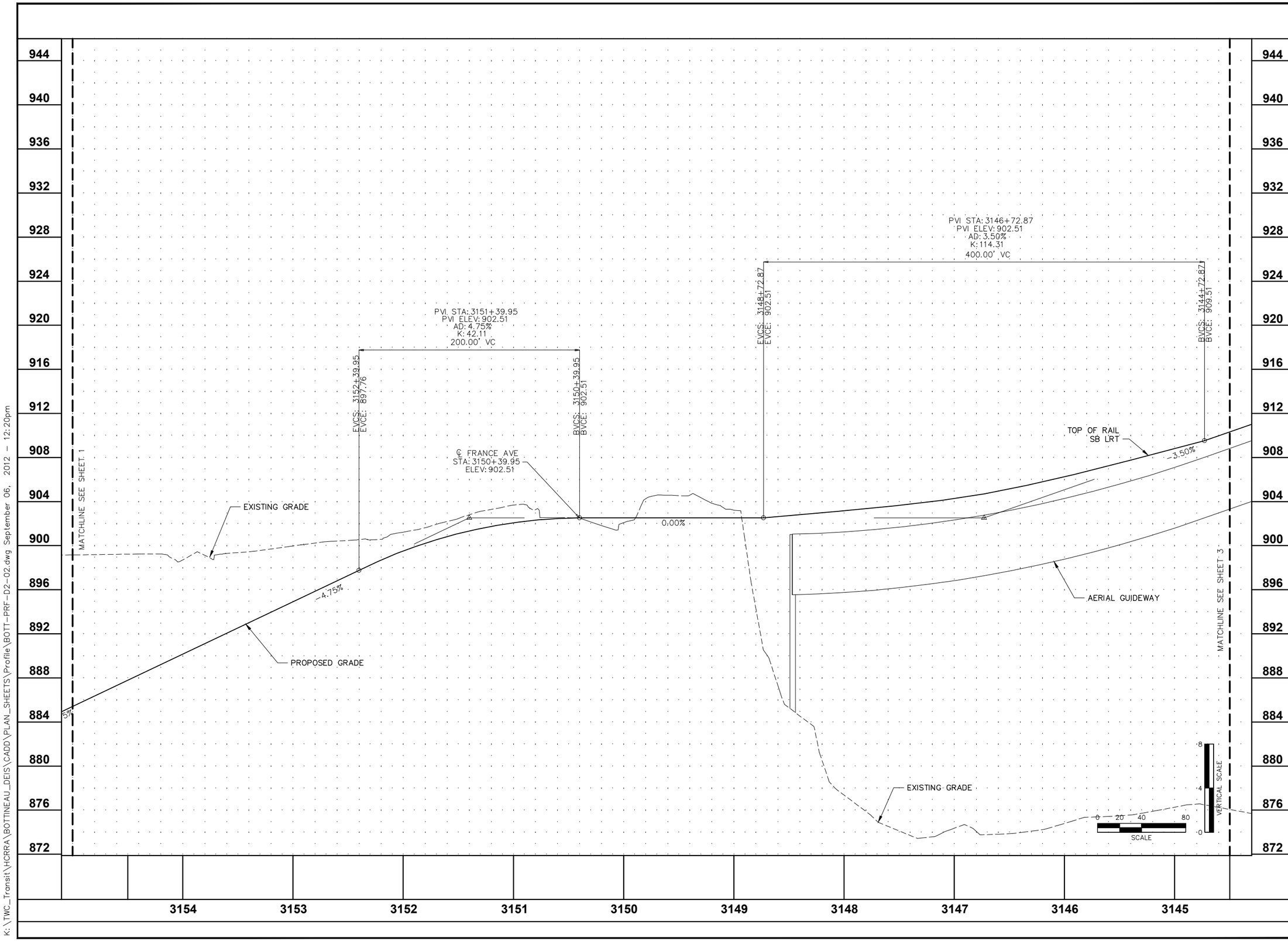

K:\TWC_Transit\HCRRA\BOTTINEAU_DEIS\CADD\PLAN_SHEETS\Profile\BOTT-PRF-D2-02.dwg September 06, 2012 - 12:20pm

BottineauTransitway
DRAFT ENVIRONMENTAL IMPACT STATEMENT

Hennepin

CONSULTANTS:

Kimley-Horn and Associates, Inc.
2550 UNIVERSITY AVE. WEST, SUITE 345N
ST. PAUL, MINNESOTA 55114
TEL. NO. (651) 645-4197
FAX. NO. (651) 645-5116

SRF Consulting Group, Inc.

LTK Engineering Services

DRAWING NAME	BOTT-PRF-D2-02.dwg
DESIGNED BY:	
DRAWN BY:	
CHECKED BY:	
DATE:	9/5/2012
PROJECT NO.	160528003.4.100

BOTTINEAU CORRIDOR
DRAFT EIS
CONCEPTUAL DESIGN

ALIGNMENT D2
CRITICAL PROFILE
BROADWAY OVER DREW AVE
SHEET 17 OF 20

CRITICAL PROFILE

SHEET NUMBER
110 OF 122

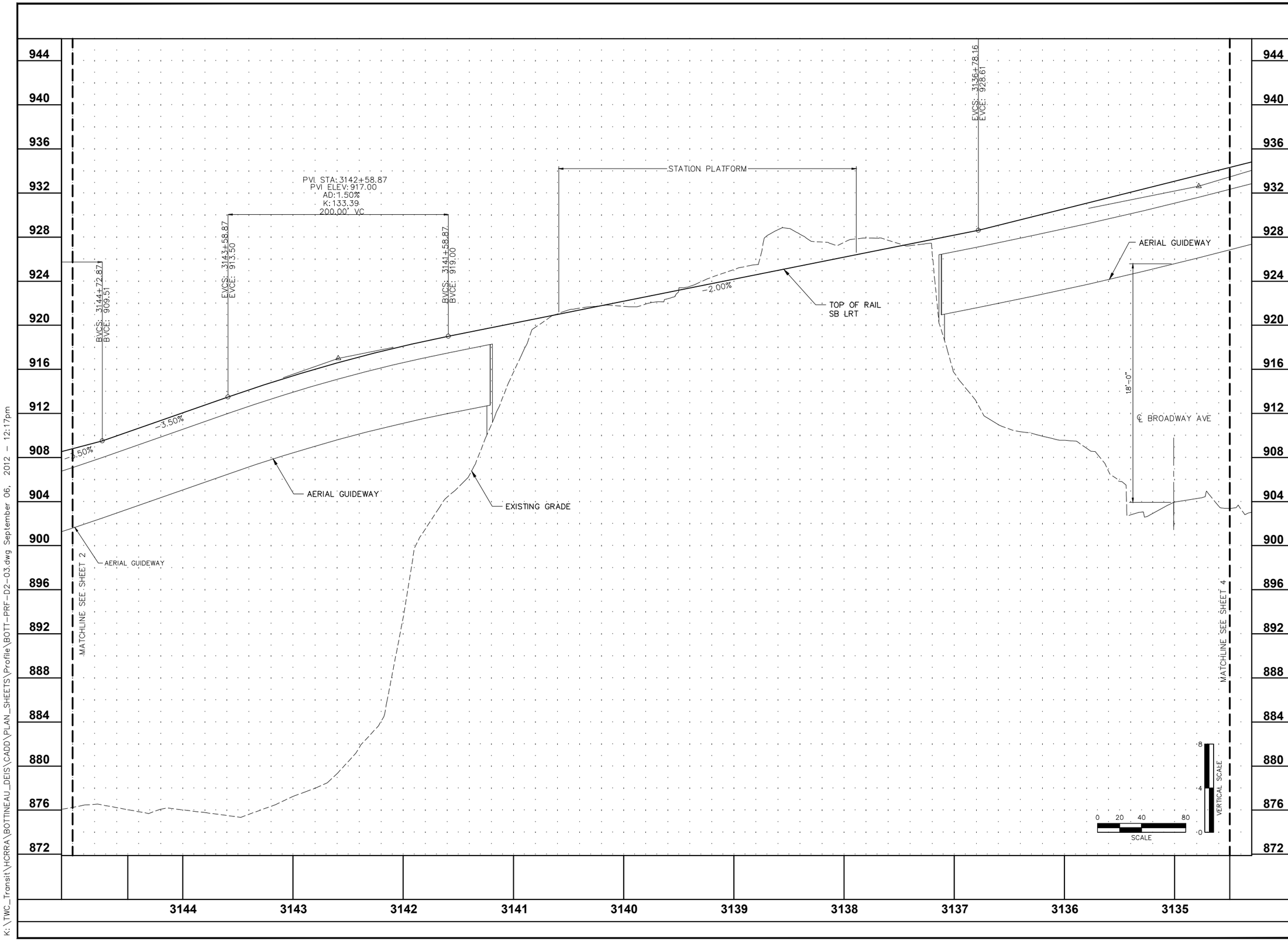

K:\TWC_Transit\HCRRA\BOTTINEAU_DEIS\CADD\PLAN_SHEETS\Profile\BOTT-PRF-D2-03.dwg September 06, 2012 - 12:17pm

BottineauTransitway
DRAFT ENVIRONMENTAL IMPACT STATEMENT

Hennepin

CONSULTANTS:

Kimley-Horn and Associates, Inc.
2550 UNIVERSITY AVE. WEST, SUITE 345N
ST. PAUL, MINNESOTA 55114
TEL. NO. (651) 645-4197
FAX. NO. (651) 645-5116

SRF Consulting Group, Inc.

LTK Engineering Services

DRAWING NAME	BOTT-PRF-D2-03.dwg
DESIGNED BY:	
DRAWN BY:	
CHECKED BY:	
DATE:	9/5/2012
PROJECT NO.	160528003.4.100

BOTTINEAU CORRIDOR
DRAFT EIS
CONCEPTUAL DESIGN

ALIGNMENT D2
CRITICAL PROFILE
W. BROADWAY OVER TH 610
SHEET 18 OF 20

CRITICAL PROFILE

SHEET NUMBER
111 OF 122

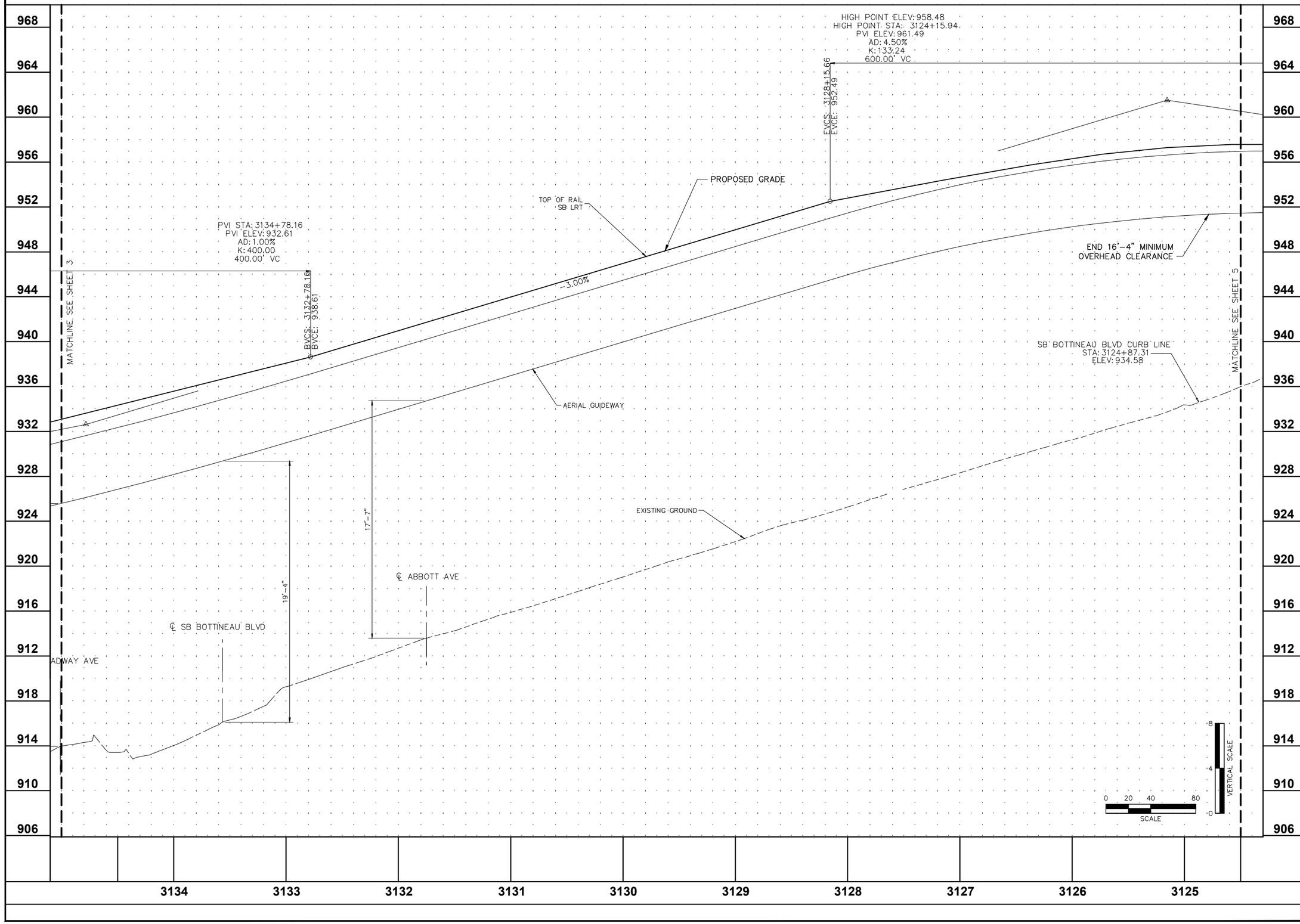

K:\TWC_Transit\HCRRA\BOTTINEAU_DEIS\CADD\PLAN_SHEETS\Profile\BOTT-PRF-D2-04.dwg September 06, 2012 - 12:08pm

BottineauTransitway
DRAFT ENVIRONMENTAL IMPACT STATEMENT

Hennepin

CONSULTANTS:

Kimley-Horn and Associates, Inc.
2550 UNIVERSITY AVE. WEST, SUITE 345N
ST. PAUL, MINNESOTA 55114
TEL. NO. (651) 645-4197
FAX. NO. (651) 645-5116

SRF Consulting Group, Inc.

LTK Engineering Services

DRAWING NAME	BOTT-PRF-D2-04.dwg
DESIGNED BY:	
DRAWN BY:	
CHECKED BY:	
DATE:	9/5/2012
PROJECT NO.	160528003.4.100

BOTTINEAU CORRIDOR
DRAFT EIS
CONCEPTUAL DESIGN

ALIGNMENT D2
CRITICAL PROFILE
BROADWAY OVER ABOTT AVE
SHEET Value OF 20

CRITICAL PROFILE

SHEET NUMBER
112 OF 122

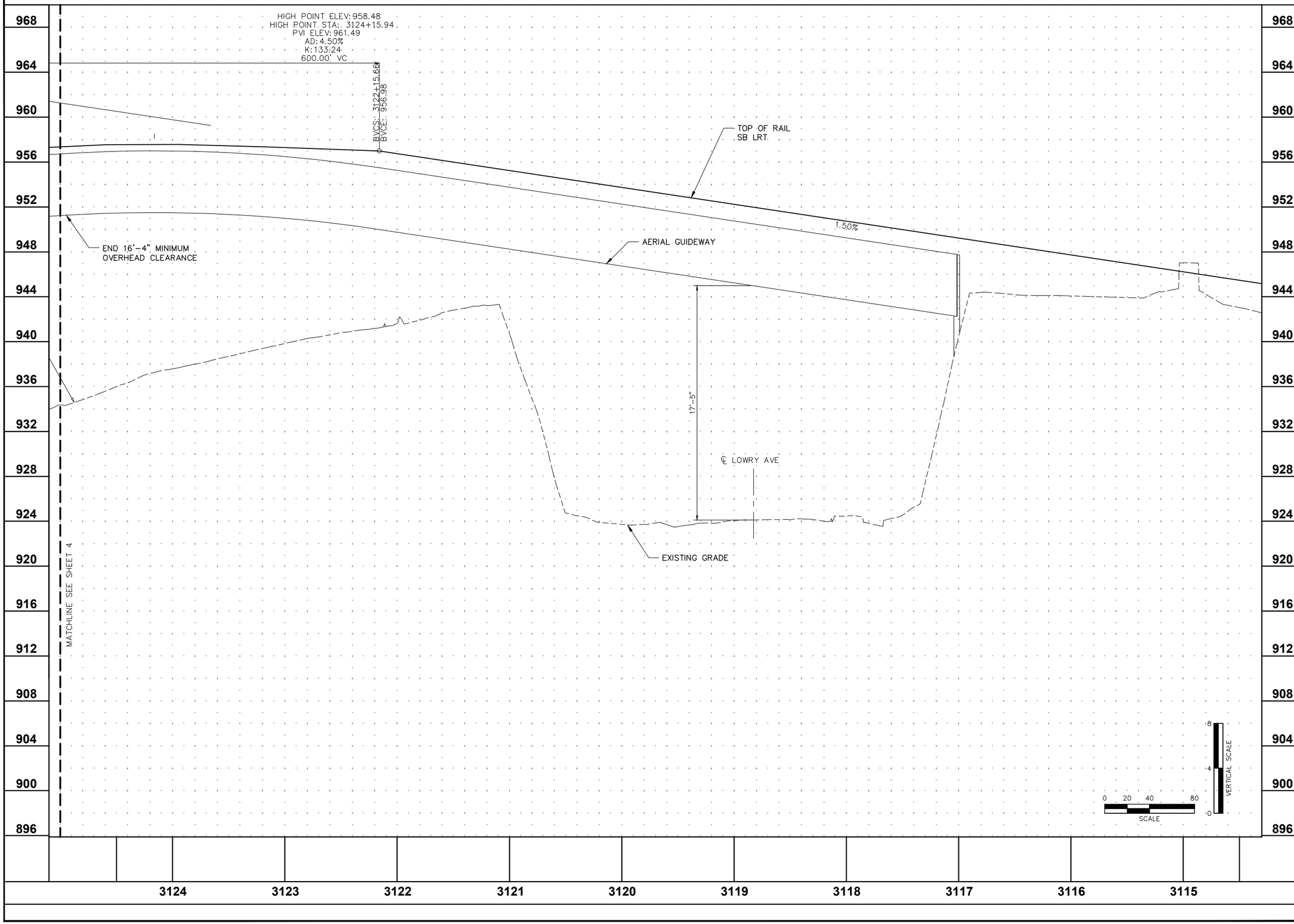

C:\Users\chris.bunders\appdata\local\temp\AcPublish_3100\BOTT-PRF-D2-05.dwg September 06, 2012 - 12:09pm

Bottineau Transitway
DRAFT ENVIRONMENTAL IMPACT STATEMENT

Hennepin

CONSULTANTS:

Kimley-Horn and Associates, Inc.
2550 UNIVERSITY AVE. WEST, SUITE 345N
ST. PAUL, MINNESOTA 55114
TEL. NO. (651) 645-4197
FAX. NO. (651) 645-5116

SRF Consulting Group, Inc.

LTK Engineering Services

DRAWING NAME	BOTT-PRF-D2-05.dwg
DESIGNED BY:	
DRAWN BY:	
CHECKED BY:	
DATE:	9/5/2012
PROJECT NO.	160528003.4.100

BOTTINEAU CORRIDOR
DRAFT EIS
CONCEPTUAL DESIGN

ALIGNMENT D2
CRITICAL PROFILE
BROADWAY OVER LOWRY AVE
SHEET 20 OF 20

CRITICAL PROFILE

SHEET NUMBER
113 OF 122

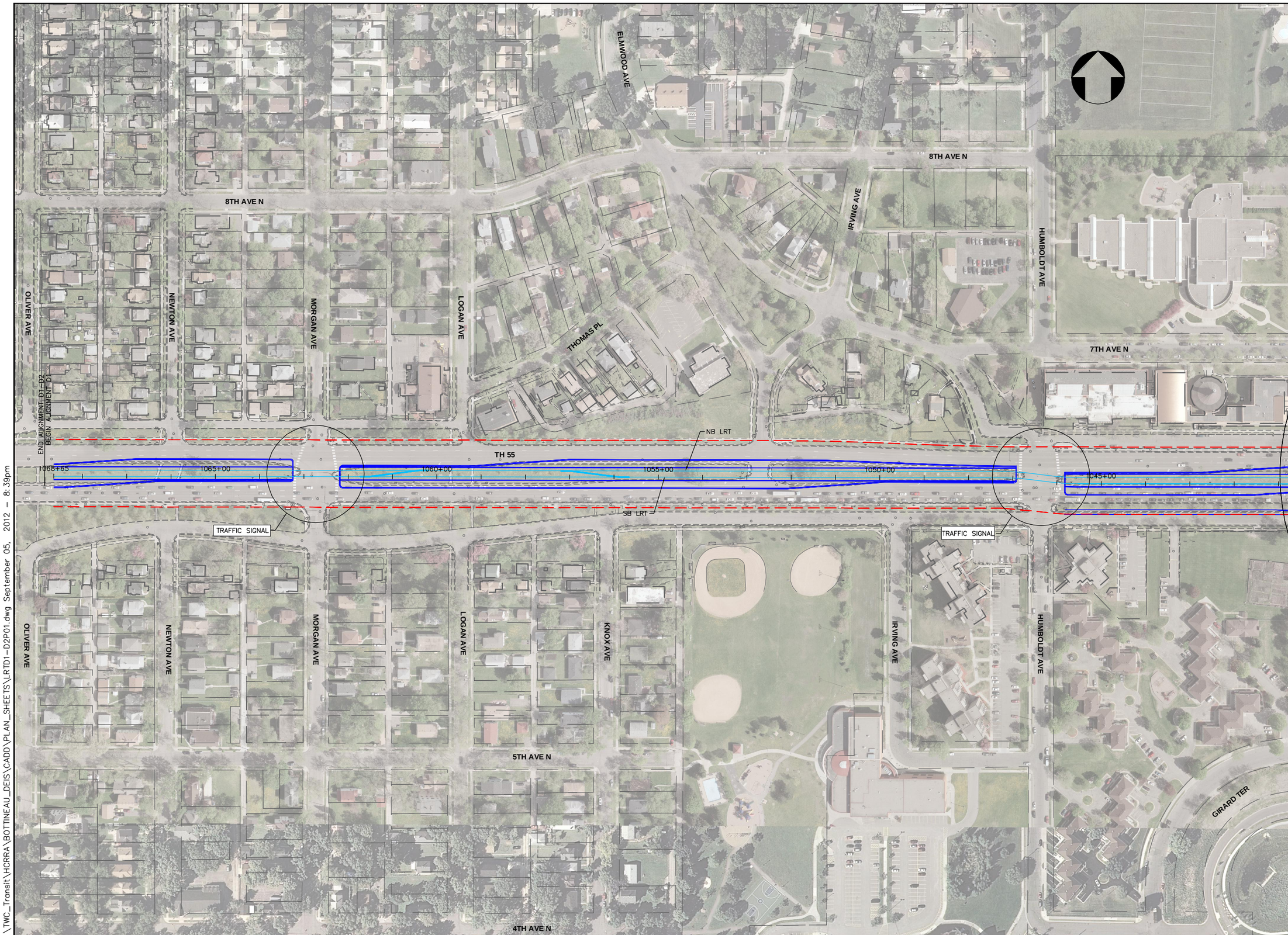

K:\TWC_Transit\HCRRA\BOTTINEAU_DEIS\CADD\PLAN_SHEETS\LRTD1-D2P01.dwg September 05, 2012 - 8:39pm

Bottineau Transitway
DRAFT ENVIRONMENTAL IMPACT STATEMENT

Hennepin

CONSULTANTS:

Kimley-Horn and Associates, Inc.
2550 UNIVERSITY AVE. WEST, SUITE 345N
ST. PAUL, MINNESOTA 55114
TEL. NO. (651) 645-4197
FAX. NO. (651) 645-5116

SRF Consulting Group, Inc.

LTK Engineering Services

DRAWING NAME	LRTD1-D2P01.dwg
DESIGNED BY:	
DRAWN BY:	
CHECKED BY:	
DATE:	9/5/2012
PROJECT NO.	160528003.4.100

SCALE
0 100' 200'

BOTTINEAU TRANSITWAY
DRAFT EIS
CONCEPTUAL DESIGN

LRT COMMON ALIGN. D
SHEET 1 OF 9

ALIGNMENT PLAN

STA 1041+00 - 1068+84

SHEET NUMBER
114 OF 122

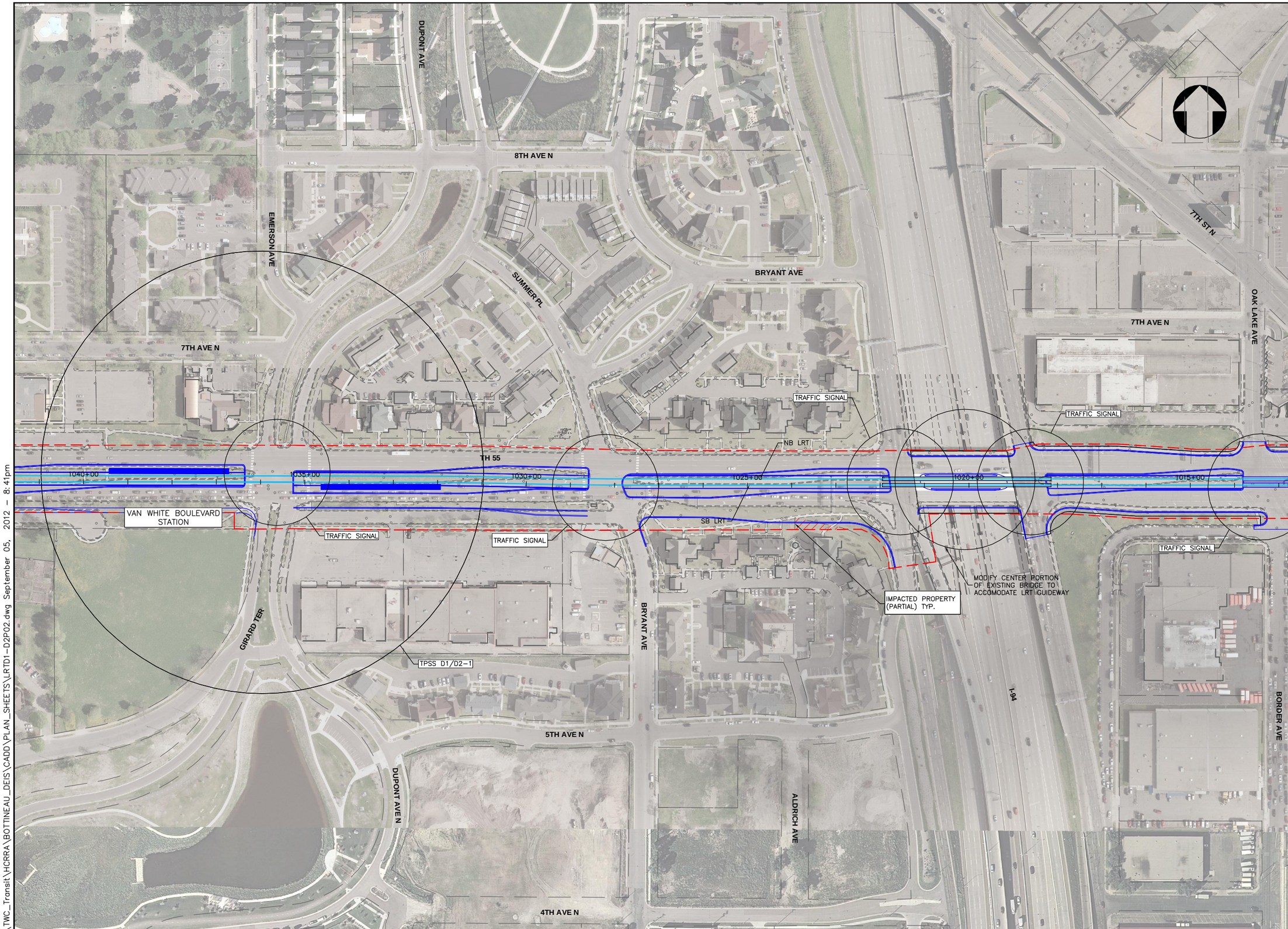

K:\TWC_Transit\HCRRA\BOTTINEAU_DEIS\CADD\PLAN_SHEETS\LRTD1-D2P02.dwg September 05, 2012 - 8:41pm

Bottineau Transitway
DRAFT ENVIRONMENTAL IMPACT STATEMENT

Hennepin

CONSULTANTS:

Kimley-Horn and Associates, Inc.
2550 UNIVERSITY AVE. WEST, SUITE 345N
ST. PAUL, MINNESOTA 55114
TEL. NO. (651) 645-4197
FAX. NO. (651) 645-5116

SRF Consulting Group, Inc.

LTK Engineering Services

DRAWING NAME	LRTD1-D2P02.dwg
DESIGNED BY:	
DRAWN BY:	
CHECKED BY:	
DATE:	9/5/2012
PROJECT NO.	160528003.4.100

SCALE
0 100' 200'

BOTTINEAU TRANSITWAY
DRAFT EIS
CONCEPTUAL DESIGN

LRT COMMON ALIGN. D
SHEET 2 OF 9

ALIGNMENT PLAN

STA 1013+00 - 1041+00

SHEET NUMBER
115 OF 122

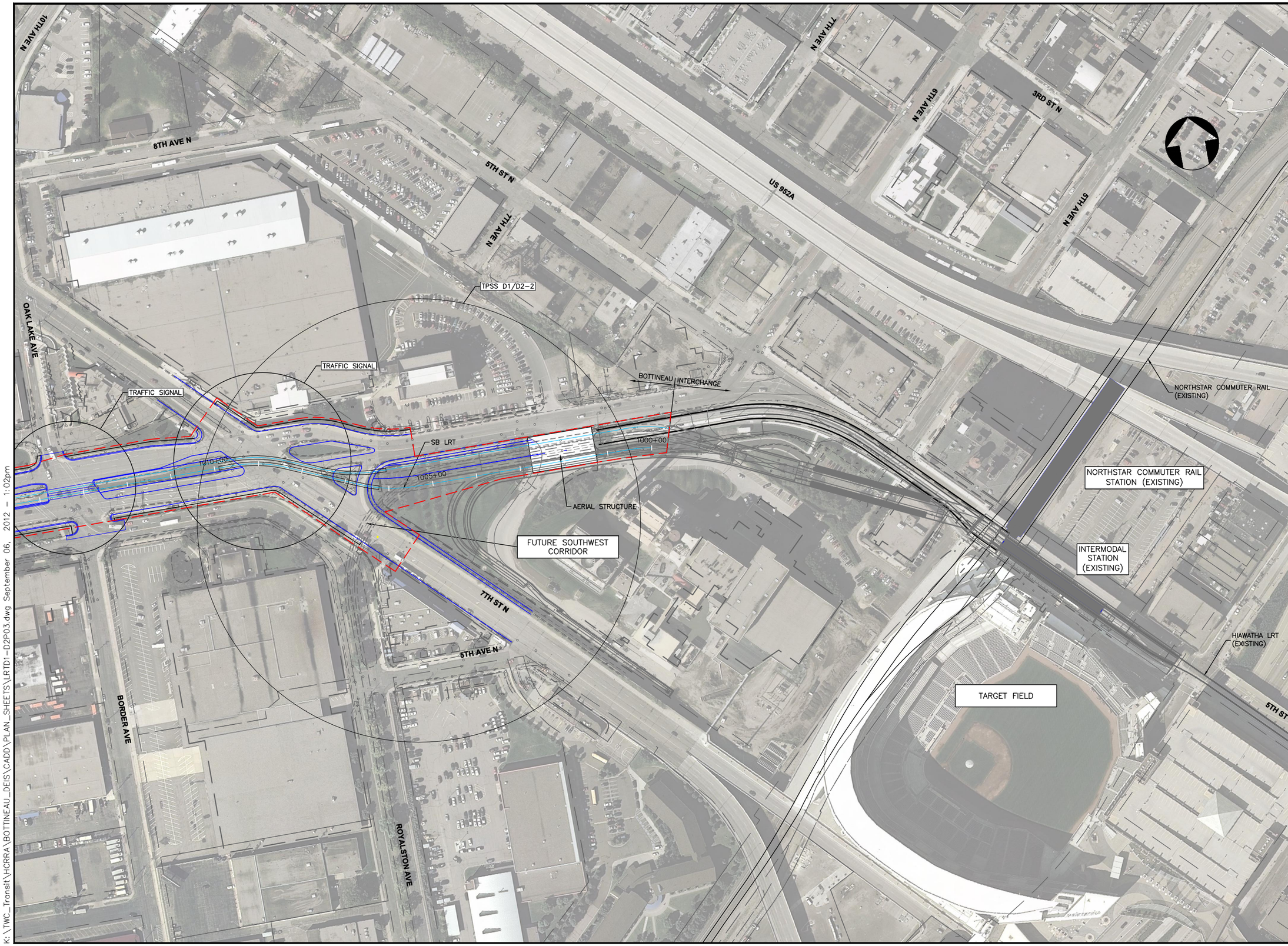

K:\TWC_Transit\HCRRA\BOTTINEAU_DEIS\CADD\PLAN_SHEETS\LRTD1-D2P03.dwg September 06, 2012 - 1:02pm

Bottineau Transitway
DRAFT ENVIRONMENTAL IMPACT STATEMENT

Hennepin

CONSULTANTS:

Kimley-Horn and Associates, Inc.
2550 UNIVERSITY AVE. WEST, SUITE 345N
ST. PAUL, MINNESOTA 55114
TEL. NO. (651) 645-4197
FAX. NO. (651) 645-5116

SRF Consulting Group, Inc.

LTK Engineering Services

DRAWING NAME	LRTD1-D2P03.dwg
DESIGNED BY:	
DRAWN BY:	
CHECKED BY:	
DATE:	9/5/2012
PROJECT NO.	160528003.4.100

SCALE
0 100' 200'

BOTTINEAU TRANSITWAY
DRAFT EIS
CONCEPTUAL DESIGN

LRT COMMON ALIGN. D
SHEET 3 OF 9

ALIGNMENT PLAN

STA 1000+00 - 1014+00

SHEET NUMBER
116 OF 122

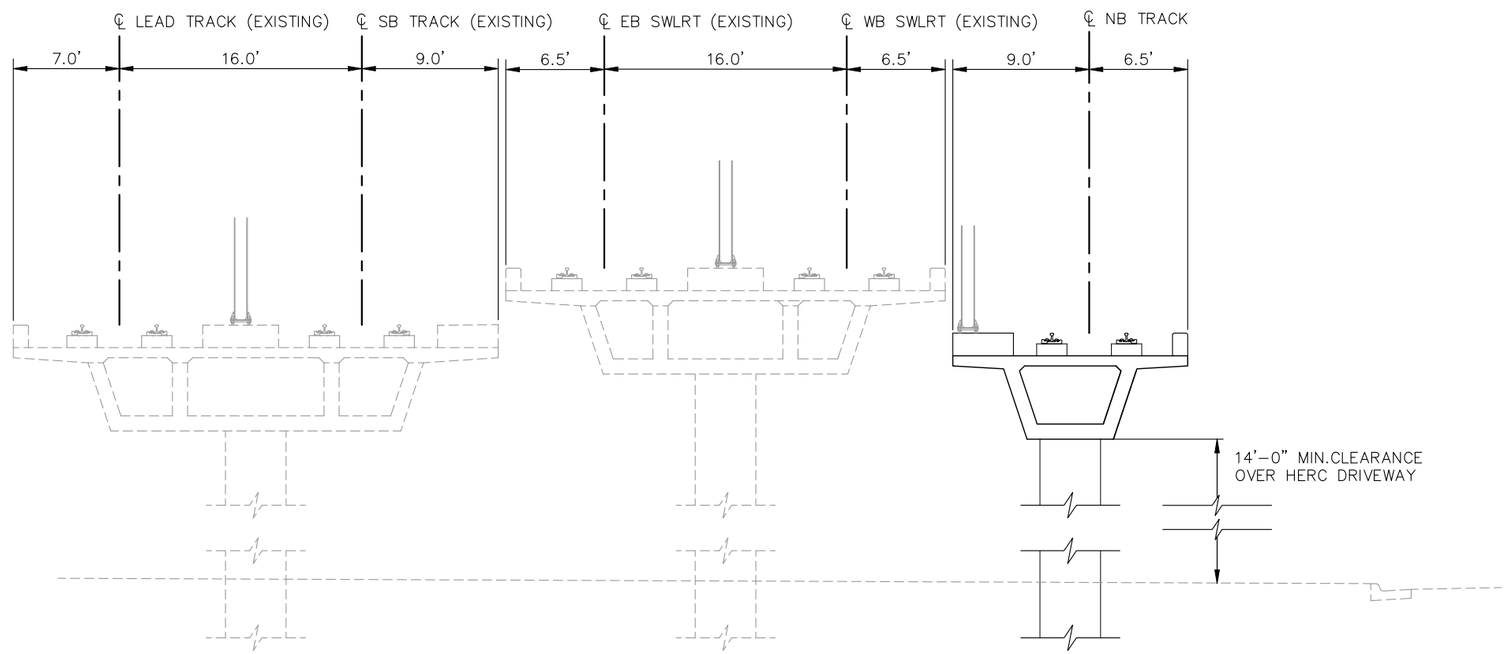

TYPICAL SECTION D1D2-01
D1/D2 COMMON ALIGNMENT - STA. 1000+00 TO STA. 1004+50

BottineauTransitway
DRAFT ENVIRONMENTAL IMPACT STATEMENT

Hennepin

CONSULTANTS:

Kimley-Horn and Associates, Inc.
2550 UNIVERSITY AVE. WEST, SUITE 345N
ST. PAUL, MINNESOTA 55114
TEL. NO. (651) 645-4197
FAX. NO. (651) 645-5116

SRF Consulting Group, Inc.

LTK Engineering Services

DRAWING NAME	BOTT-TYP D1D2_01.dwg
DESIGNED BY:	
DRAWN BY:	
CHECKED BY:	
DATE:	6/29/12
PROJECT NO.	160528003.4.100

BOTTINEAU TRANSITWAY
DRAFT EIS
CONCEPTUAL DESIGN

D1/D2 COMMON ALIGNMENT
SHEET 4 OF 9

TYPICAL SECTION D1D2-01

SHEET NUMBER
117 OF 122

P:\Projects\C4147.02 - Bottineau DEIS\C3D\BOTT-TYP D1D2_01.dwg August 24, 2012 - 9:35am

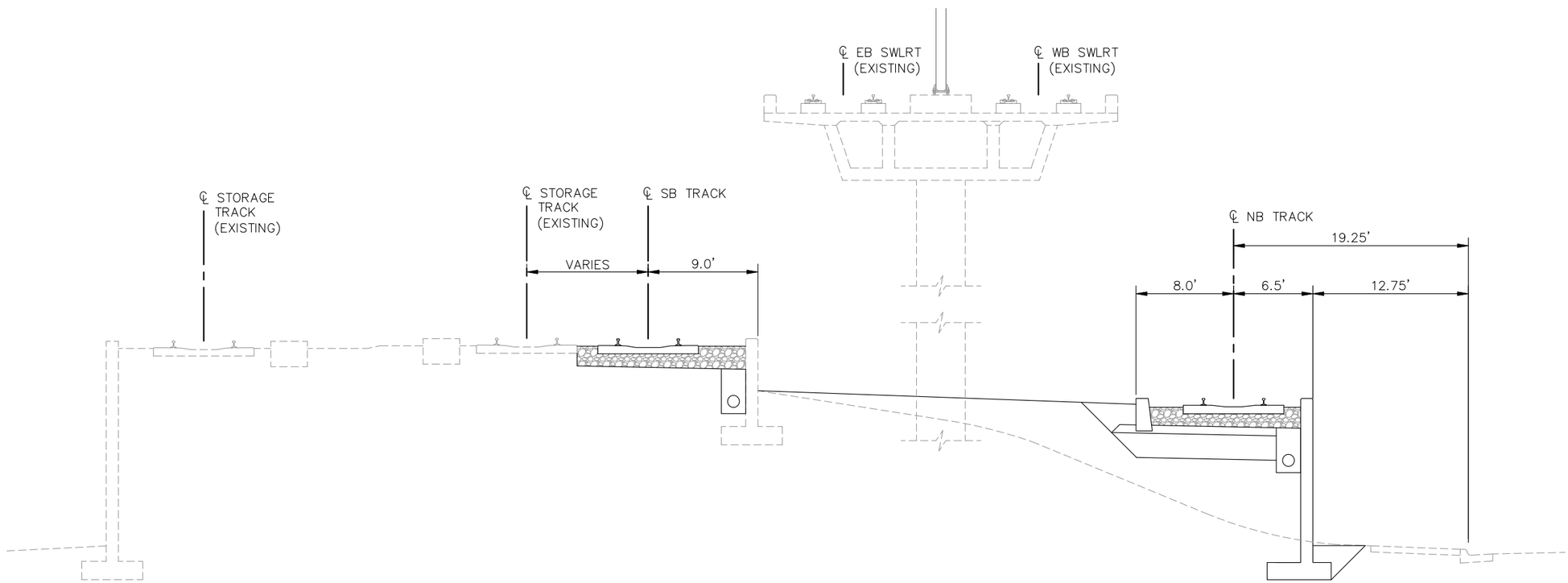

TYPICAL SECTION D1D2-02
ALIGNMENT D1D2 - STA. 1004+50 TO STA. 1006+50

BottineauTransitway
DRAFT ENVIRONMENTAL IMPACT STATEMENT

Hennepin

CONSULTANTS:

Kimley-Horn and Associates, Inc.
2550 UNIVERSITY AVE. WEST, SUITE 345N
ST. PAUL, MINNESOTA 55114
TEL. NO. (651) 645-4197
FAX. NO. (651) 645-5116

SRF Consulting Group, Inc.

LTK Engineering Services

DRAWING NAME	BOTT-TYP D1D2_02.dwg
DESIGNED BY:	
DRAWN BY:	
CHECKED BY:	
DATE:	6/29/12
PROJECT NO.	160528003.4.100

BOTTINEAU CORRIDOR
DRAFT EIS
CONCEPTUAL DESIGN

LRT COMMON ALIGN. D
SHEET 5 OF 9

TYPICAL SECTION D1D2-02

SHEET NUMBER
118 OF 122

I:\900_CAD\DESIGN\LTK\Projects\C4147.02 - Bottineau DEIS\BOTT-TYP D1D2_02.dwg July 18, 2012 - 5:24pm

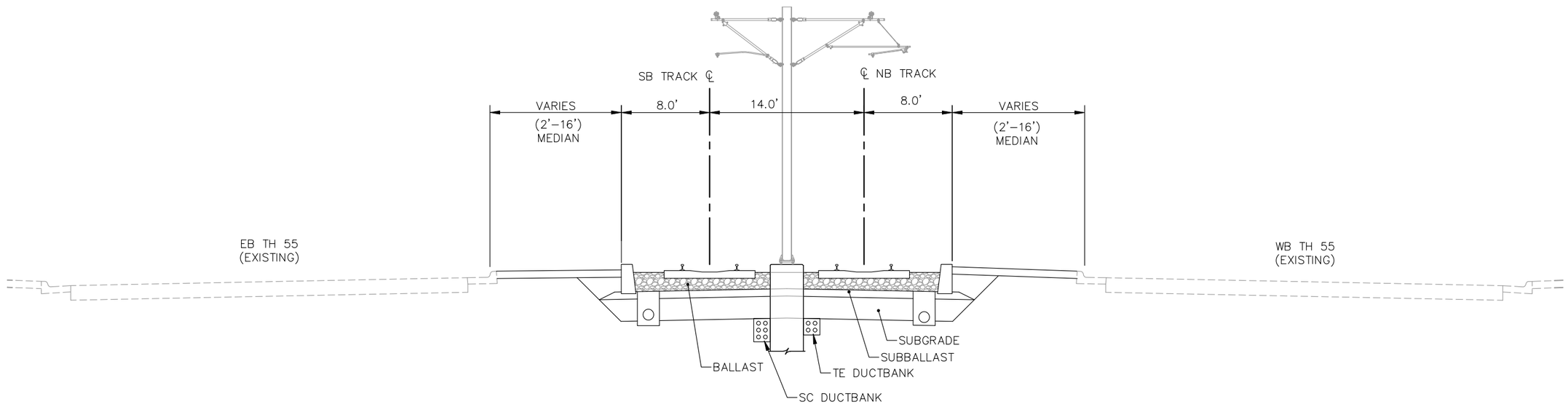

TYPICAL SECTION D1D2-03
ALIGNMENT D1D2 - STA. 1006+50 TO STA. 1019+00

Bottineau Transitway
DRAFT ENVIRONMENTAL IMPACT STATEMENT

Hennepin

CONSULTANTS:

Kimley-Horn and Associates, Inc.
2550 UNIVERSITY AVE. WEST, SUITE 345N
ST. PAUL, MINNESOTA 55114
TEL. NO. (651) 645-4197
FAX. NO. (651) 645-5116

SRF Consulting Group, Inc.

LTK Engineering Services

DRAWING NAME	BOTT–TYP D1D2_03.dwg
DESIGNED BY:	
DRAWN BY:	
CHECKED BY:	
DATE:	6/29/12
PROJECT NO.	160528003.4.100

BOTTINEAU CORRIDOR
DRAFT EIS
CONCEPTUAL DESIGN

LRT COMMON ALIGN. D
SHEET 6 OF 9

TYPICAL SECTION D1D2-03

SHEET NUMBER
119 OF 122

I:\900_CAD\DESIGN\LTK\Projects\C4147.02 – Bottineau DEIS\BOTT–TYP D1D2_03.dwg July 18, 2012 – 5:24pm

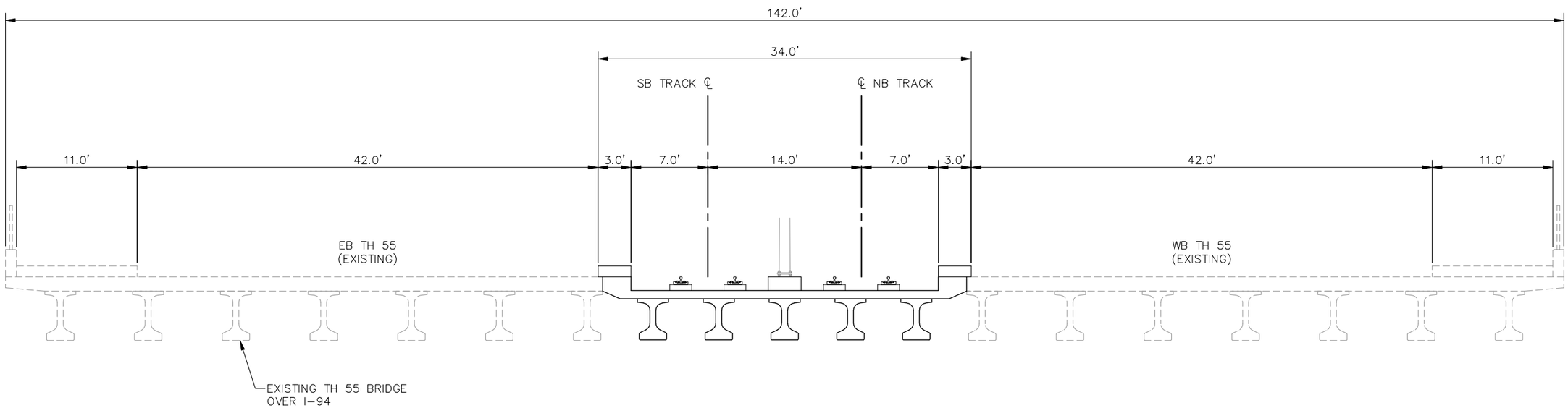

TYPICAL SECTION D1D2-04
ALIGNMENT D1D2 - STA. 1019+00 TO STA. 1021+50

I:\900_CAD\DESIGN\LTK\Projects\C4147.02 - Bottineau DEIS\BOTT-TYP D1D2_04.dwg July 18, 2012 - 5:24pm

BottineauTransitway
DRAFT ENVIRONMENTAL IMPACT STATEMENT

Hennepin

CONSULTANTS:

Kimley-Horn and Associates, Inc.
2550 UNIVERSITY AVE. WEST, SUITE 345N
ST. PAUL, MINNESOTA 55114
TEL. NO. (651) 645-4197
FAX. NO. (651) 645-5116

SRF Consulting Group, Inc.

LTK Engineering Services

DRAWING NAME	BOTT-TYP D1D2_04.dwg
DESIGNED BY:	
DRAWN BY:	
CHECKED BY:	
DATE:	6/29/12
PROJECT NO.	160528003.4.100

BOTTINEAU CORRIDOR
DRAFT EIS
CONCEPTUAL DESIGN

LRT COMMON ALIGN. D
SHEET 7 OF 9

TYPICAL SECTION D1D2-04

SHEET NUMBER
120 OF 122

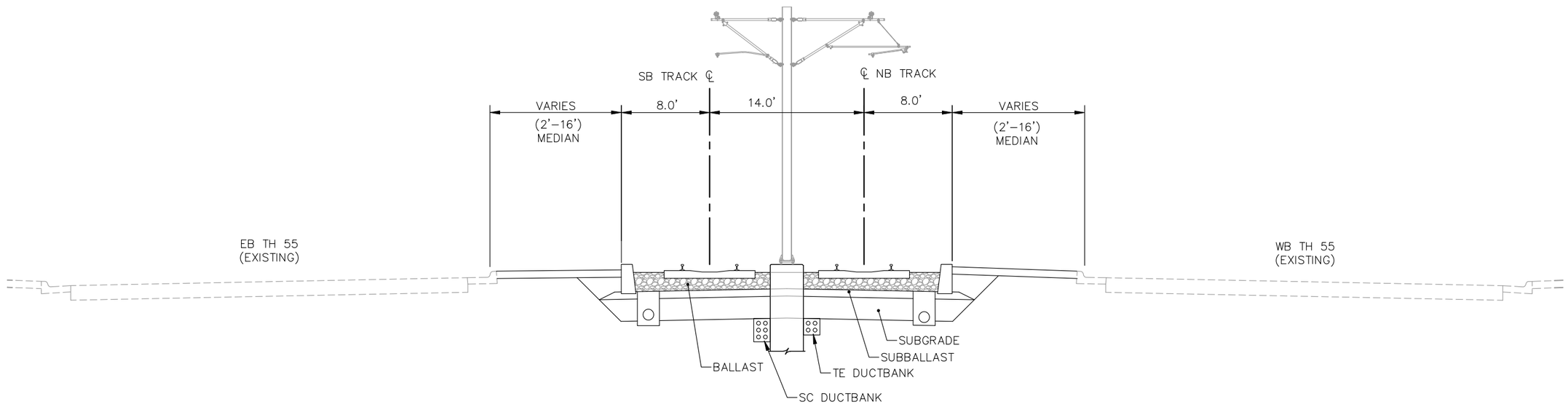

TYPICAL SECTION D1D2-05
ALIGNMENT D1D2 - STA. 1021+50 TO STA. 1068+84

BottineauTransitway
DRAFT ENVIRONMENTAL IMPACT STATEMENT

Hennepin

CONSULTANTS:

Kimley-Horn and Associates, Inc.
2550 UNIVERSITY AVE. WEST, SUITE 345N
ST. PAUL, MINNESOTA 55114
TEL. NO. (651) 645-4197
FAX. NO. (651) 645-5116

SRF Consulting Group, Inc.

LTK Engineering Services

DRAWING NAME	BOTT–TYP D1D2_05.dwg
DESIGNED BY:	
DRAWN BY:	
CHECKED BY:	
DATE:	6/29/12
PROJECT NO.	160528003.4.100

BOTTINEAU CORRIDOR
DRAFT EIS
CONCEPTUAL DESIGN

LRT COMMON ALIGN. D
SHEET 8 OF 9

TYPICAL SECTION D1D2-05

SHEET NUMBER
121 OF 122

I:\900_CAD\DESIGN\LTK\Projects\C4147.02 – Bottineau DEIS\BOTT–TYP D1D2_05.dwg July 18, 2012 – 5:24pm

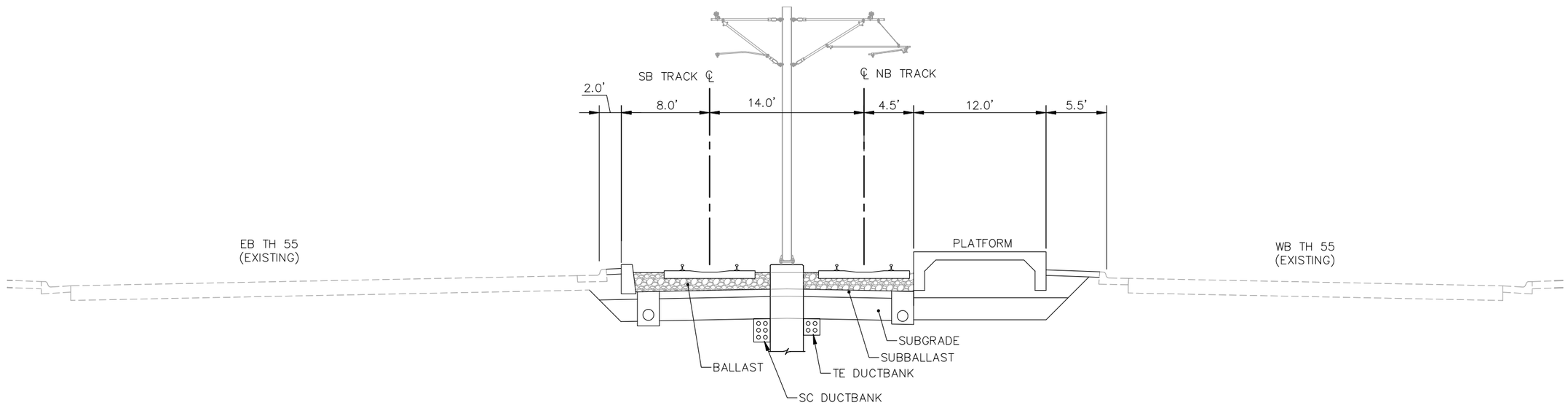

TYPICAL SECTION D1D2-05A
ALIGNMENT D1D2 - VAN WHITE STATION
(NB PLATFORM SHOWN, SB SIMILAR)

I:\900_CAD\DESIGN\LTK\Projects\C4147.02 – Bottineau DEIS\BOTT–TYP D1D2_05A.dwg July 18, 2012 – 5:24pm

BottineauTransitway
DRAFT ENVIRONMENTAL IMPACT STATEMENT

Hennepin

CONSULTANTS:

Kimley-Horn and Associates, Inc.
2550 UNIVERSITY AVE. WEST, SUITE 345N
ST. PAUL, MINNESOTA 55114
TEL. NO. (651) 645-4197
FAX. NO. (651) 645-5116

SRF Consulting Group, Inc.

LTK Engineering Services

DRAWING NAME	BOTT–TYP D1D2_05A.dwg
DESIGNED BY:	
DRAWN BY:	
CHECKED BY:	
DATE:	6/29/12
PROJECT NO.	160528003.4.100

BOTTINEAU CORRIDOR
DRAFT EIS
CONCEPTUAL DESIGN

LRT COMMON ALIGN. D
SHEET 9 OF 9

TYPICAL SECTION D1D2-05A

SHEET NUMBER
122 OF 122