APPENDIX E

CONCEPTUAL ENGINEERING DRAWINGS

PART 1

Alignment A Drawings

Alignment B Drawings

Alignment C Drawings

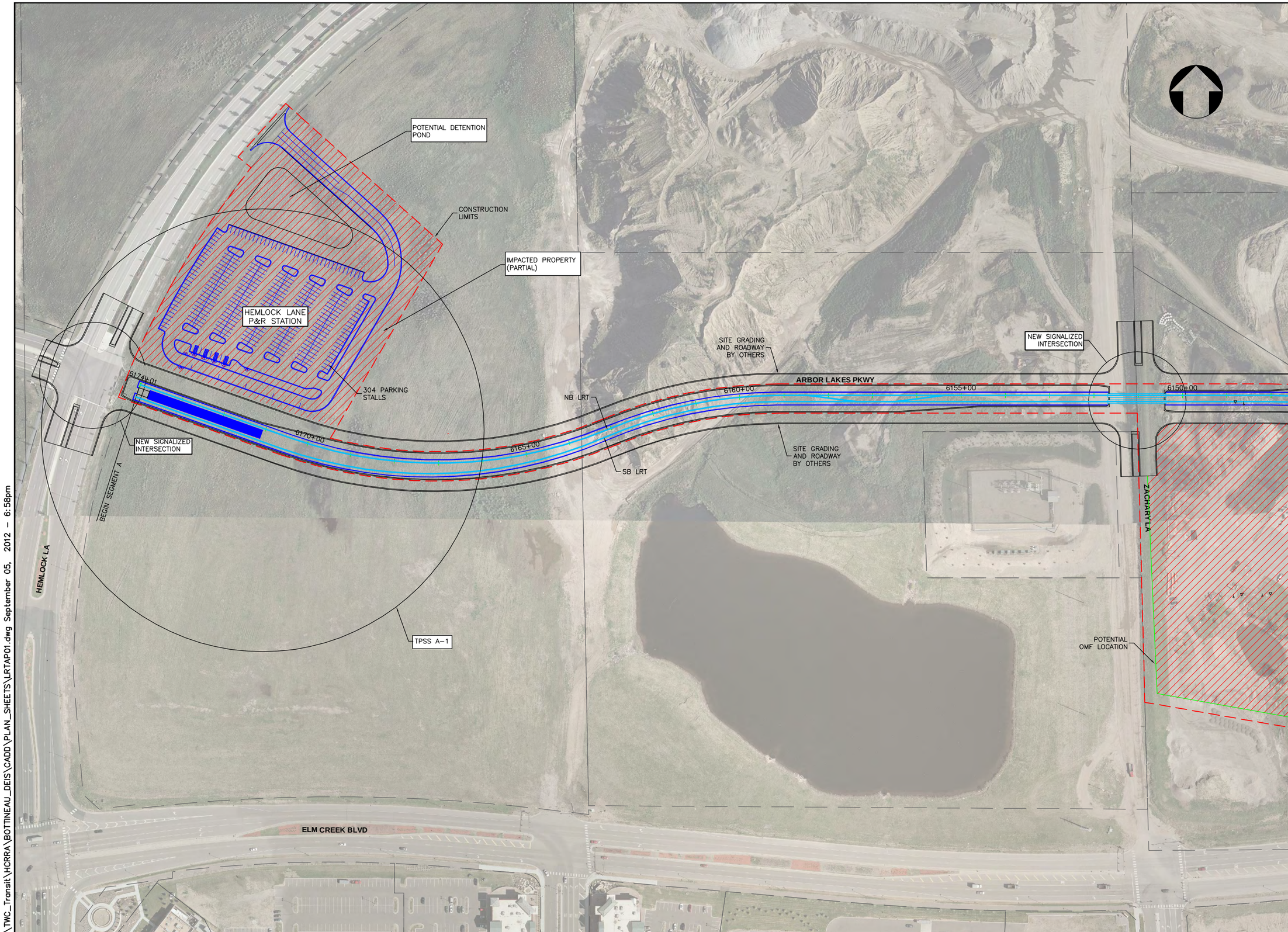

K:\TWC_Transit\HCRRA\BOTTINEAU_DEIS\CADD\PLAN_SHEETS\LRTAP01.dwg September 05, 2012 - 6:58pm

Bottineau Transitway
DRAFT ENVIRONMENTAL IMPACT STATEMENT

Hennepin

CONSULTANTS:

Kimley-Horn and Associates, Inc.
2550 UNIVERSITY AVE. WEST, SUITE 345N
ST. PAUL, MINNESOTA 55114
TEL. NO. (651) 645-4197
FAX. NO. (651) 645-5116

SRF Consulting Group, Inc.

LTK Engineering Services

DRAWING NAME	LRTAP01.dwg
DESIGNED BY:	
DRAWN BY:	
CHECKED BY:	
DATE:	9/5/2012
PROJECT NO.	160528003.4.100

SCALE
0 100' 200'

BOTTINEAU TRANSITWAY
DRAFT EIS
CONCEPTUAL DESIGN

LRT ALIGNMENT A
SHEET 1 OF 21

ALIGNMENT PLAN
STA 6148+00-6174+01

SHEET NUMBER
1 OF 122

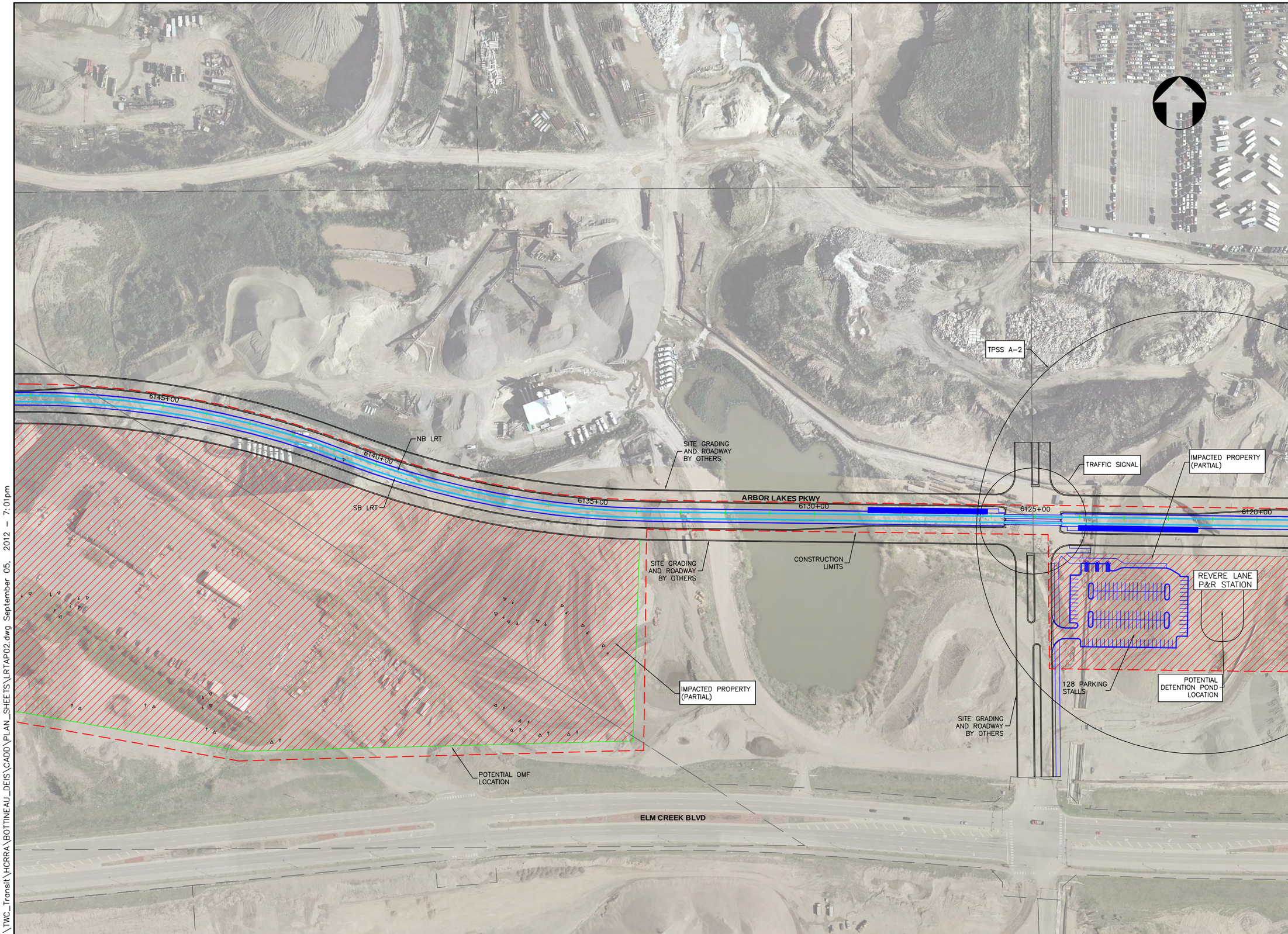

K:\TWC_Transit\HCRRA\BOTTINEAU_DEIS\CADD\PLAN_SHEETS\LRTAP02.dwg September 05, 2012 - 7:01pm

Bottineau Transitway
DRAFT ENVIRONMENTAL IMPACT STATEMENT

Hennepin

CONSULTANTS:

Kimley-Horn and Associates, Inc.
2550 UNIVERSITY AVE. WEST, SUITE 345N
ST. PAUL, MINNESOTA 55114
TEL. NO. (651) 645-4197
FAX NO. (651) 645-5116

SRF Consulting Group, Inc.

LTK Engineering Services

DRAWING NAME	LRTAP02.dwg
DESIGNED BY:	
DRAWN BY:	
CHECKED BY:	
DATE:	9/5/2012
PROJECT NO.	160528003.4.100

SCALE
0 100' 200'

BOTTINEAU TRANSITWAY
DRAFT EIS
CONCEPTUAL DESIGN

LRT ALIGNMENT A
SHEET 2 OF 21

ALIGNMENT PLAN
STA 6120+00 - 6148+00

SHEET NUMBER
2 OF 122

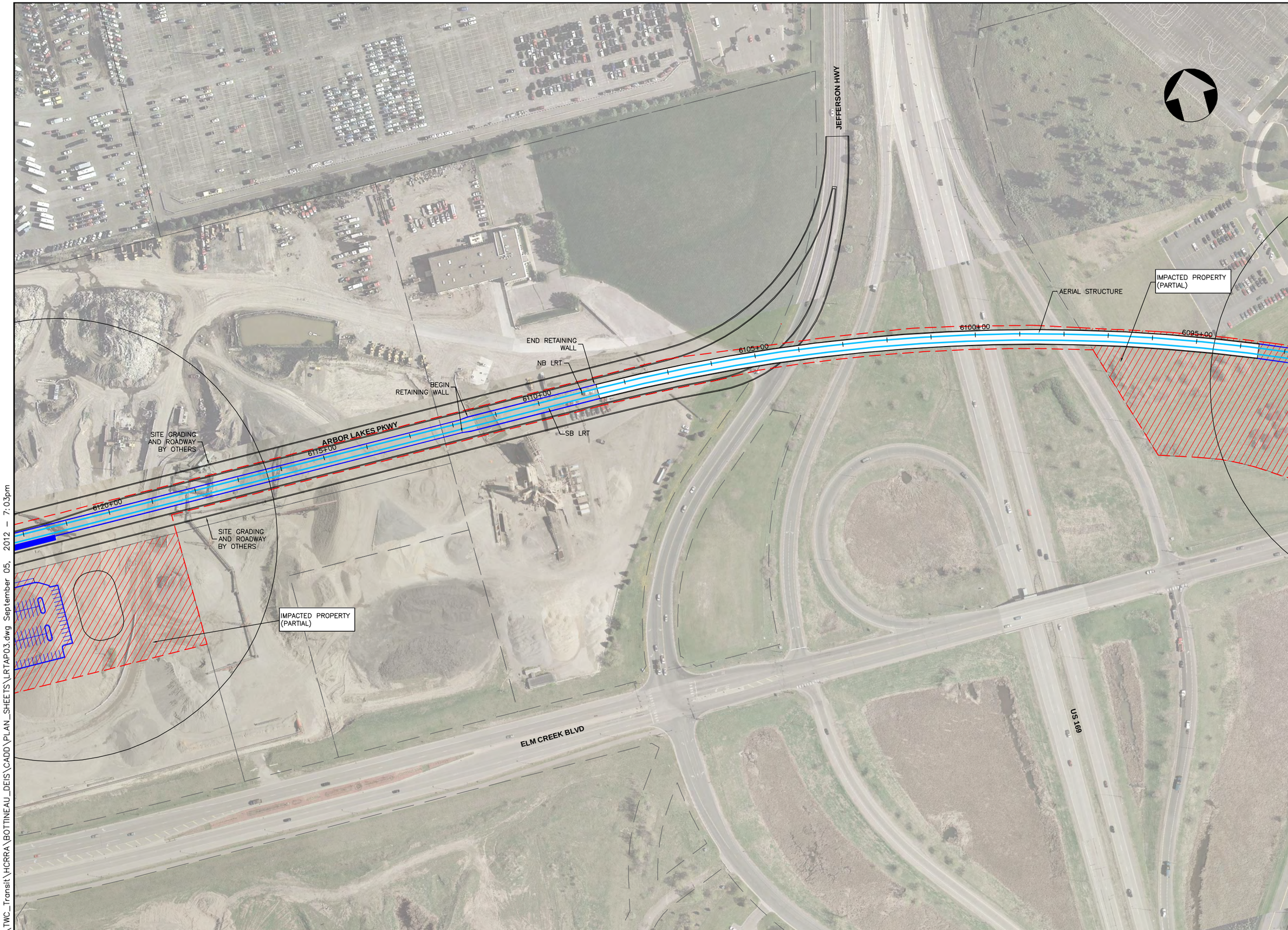

K:\TWC_Transit\HCRRA\BOTTINEAU_DEIS\CADD\PLAN_SHEETS\LRTAP03.dwg September 05, 2012 – 7:03pm

Bottineau Transitway
DRAFT ENVIRONMENTAL IMPACT STATEMENT

Hennepin

CONSULTANTS:

Kimley-Horn and Associates, Inc.
2550 UNIVERSITY AVE. WEST, SUITE 345N
ST. PAUL, MINNESOTA 55114
TEL. NO. (651) 645-4197
FAX. NO. (651) 645-5116

SRF Consulting Group, Inc.

LTK Engineering Services

DRAWING NAME	LRTAP03.dwg
DESIGNED BY:	
DRAWN BY:	
CHECKED BY:	
DATE:	9/5/2012
PROJECT NO.	160528003.4.100

SCALE
0 100' 200'

BOTTINEAU TRANSITWAY
DRAFT EIS
CONCEPTUAL DESIGN

LRT ALIGNMENT A
SHEET 3 OF 21

ALIGNMENT PLAN
STA 6093+00 - 6122+00

SHEET NUMBER
3 OF 122

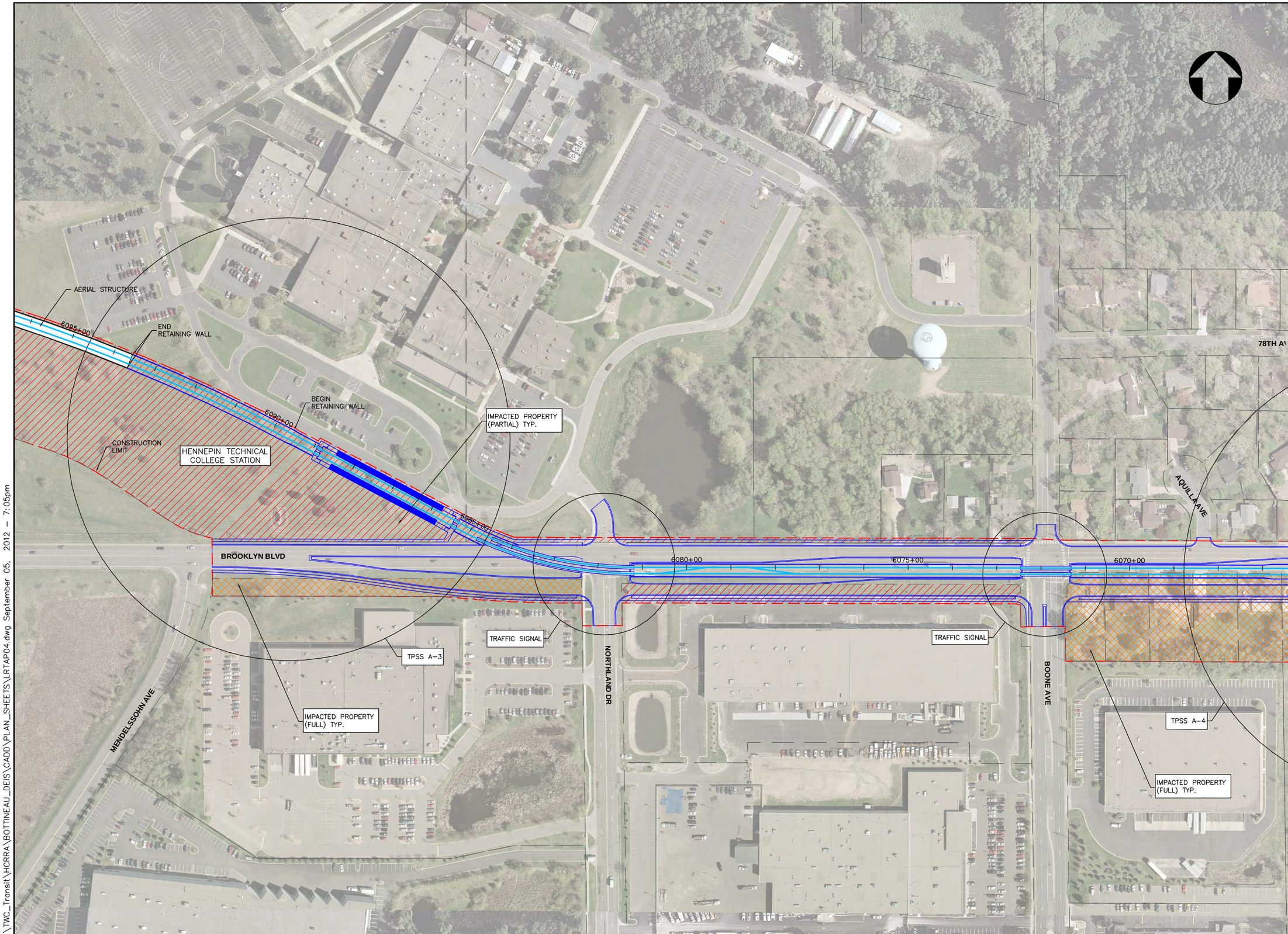

K:\TWC_Transit\HCRRA\BOTTINEAU_DEIS\CADD\PLAN_SHEETS\LRTAP04.dwg September 05, 2012 – 7:05pm

Bottineau Transitway
DRAFT ENVIRONMENTAL IMPACT STATEMENT

Hennepin

CONSULTANTS:

Kimley-Horn and Associates, Inc.
2550 UNIVERSITY AVE. WEST, SUITE 345N
ST. PAUL, MINNESOTA 55114
TEL. NO. (651) 645-4197
FAX. NO. (651) 645-5116

SRF Consulting Group, Inc.

LTK Engineering Services

DRAWING NAME	LRTAP04.dwg
DESIGNED BY:	
DRAWN BY:	
CHECKED BY:	
DATE:	9/5/2012
PROJECT NO.	160528003.4.100

SCALE
0 100' 200'

BOTTINEAU TRANSITWAY
DRAFT EIS
CONCEPTUAL DESIGN

LRT ALIGNMENT A
SHEET 4 OF 21

ALIGNMENT PLAN
STA 6067+00 - 6093+00

SHEET NUMBER
4 OF 122

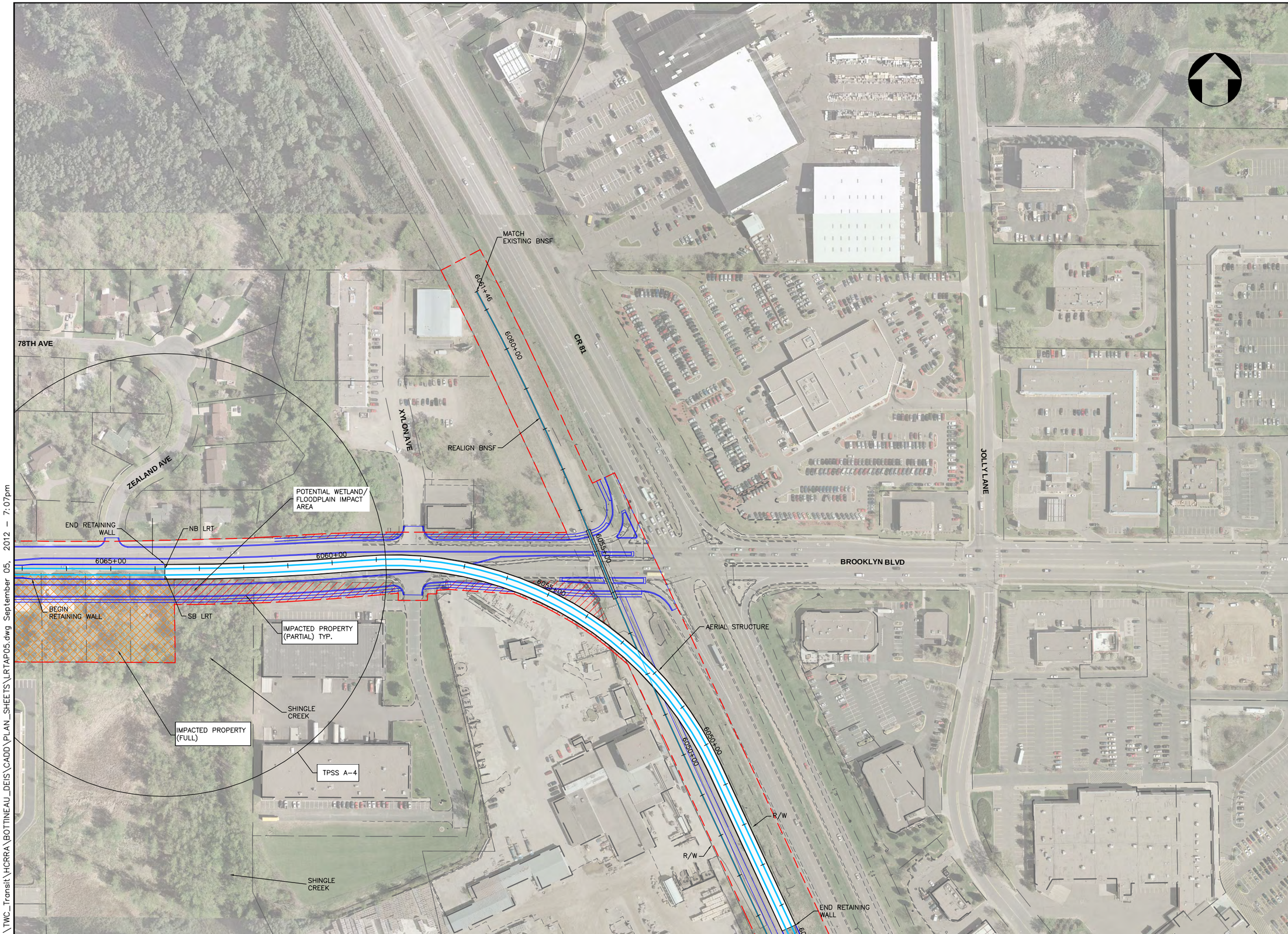

K:\TWC_Transit\HCRRA\BOTTINEAU_DEIS\CADD\PLAN_SHEETS\LRTAP05.dwg September 05, 2012 - 7:07pm

Bottineau Transitway
DRAFT ENVIRONMENTAL IMPACT STATEMENT

Hennepin

CONSULTANTS:

Kimley-Horn and Associates, Inc.
2550 UNIVERSITY AVE. WEST, SUITE 345N
ST. PAUL, MINNESOTA 55114
TEL. NO. (651) 645-4197
FAX. NO. (651) 645-5116

SRF Consulting Group, Inc.

LTK Engineering Services

DRAWING NAME	LRTAP05.dwg
DESIGNED BY:	
DRAWN BY:	
CHECKED BY:	
DATE:	9/5/2012
PROJECT NO.	160528003.4.100

SCALE
0 100' 200'

BOTTINEAU TRANSITWAY
DRAFT EIS
CONCEPTUAL DESIGN

LRT ALIGNMENT A
SHEET 5 OF 21

ALIGNMENT PLAN
STA 6045+00 - 6067+00

SHEET NUMBER
5 OF 122

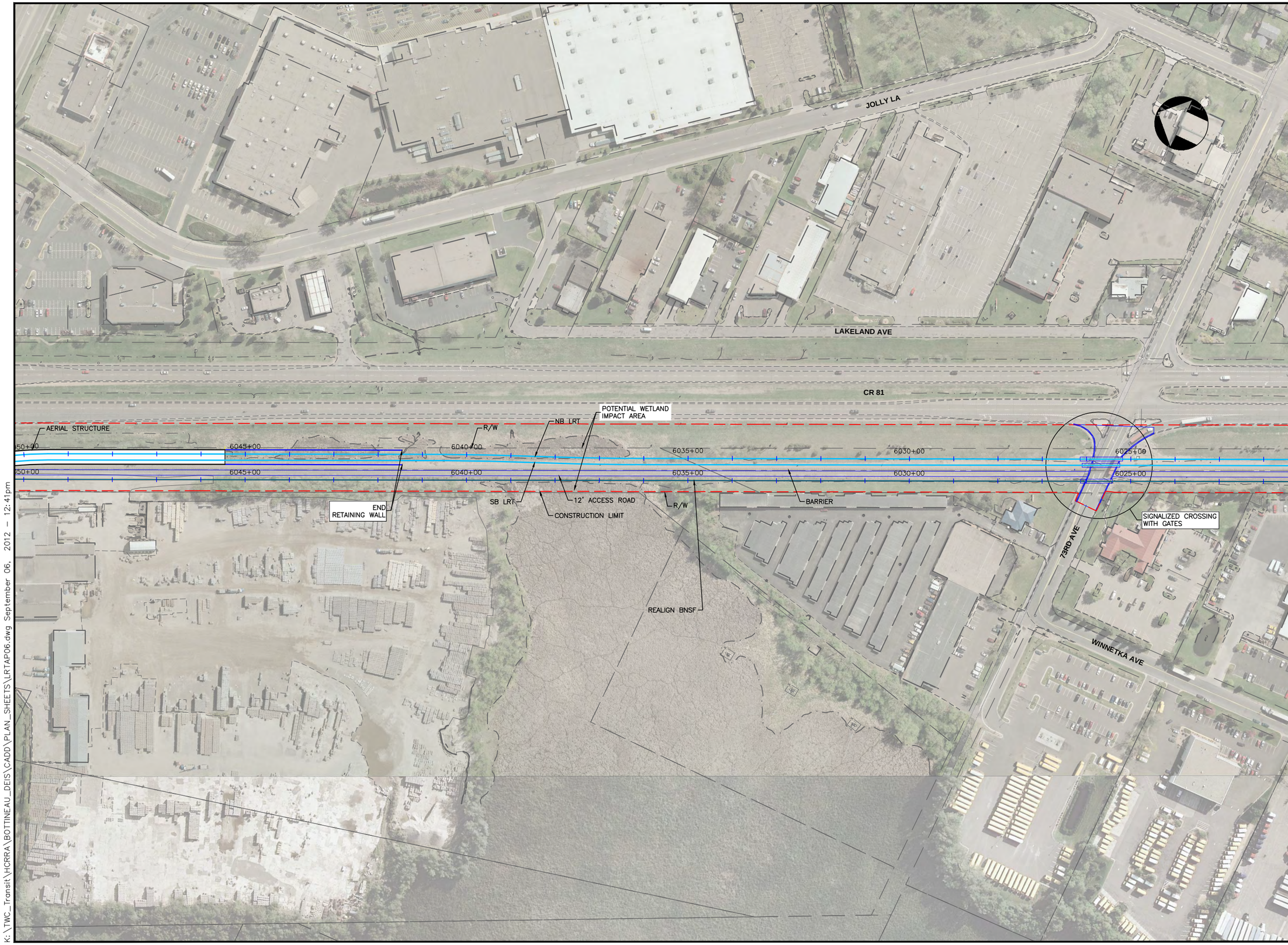

K:\TWC_Transit\HCRRA\BOTTINEAU_DEIS\CADD\PLAN_SHEETS\LRTAP06.dwg September 06, 2012 - 12:41pm

Bottineau Transitway
DRAFT ENVIRONMENTAL IMPACT STATEMENT

Hennepin

CONSULTANTS:

Kimley-Horn and Associates, Inc.
2550 UNIVERSITY AVE. WEST, SUITE 345N
ST. PAUL, MINNESOTA 55114
TEL. NO. (651) 645-4197
FAX. NO. (651) 645-5116

SRF Consulting Group, Inc.

LTK Engineering Services

DRAWING NAME	LRTAP06.dwg
DESIGNED BY:	
DRAWN BY:	
CHECKED BY:	
DATE:	9/5/2012
PROJECT NO.	160528003.4.100

SCALE
0 100' 200'

BOTTINEAU TRANSITWAY
DRAFT EIS
CONCEPTUAL DESIGN

LRT ALIGNMENT A
SHEET 6 OF 21

ALIGNMENT PLAN
STA 6022+00 - 6050+00

SHEET NUMBER
6 OF 122

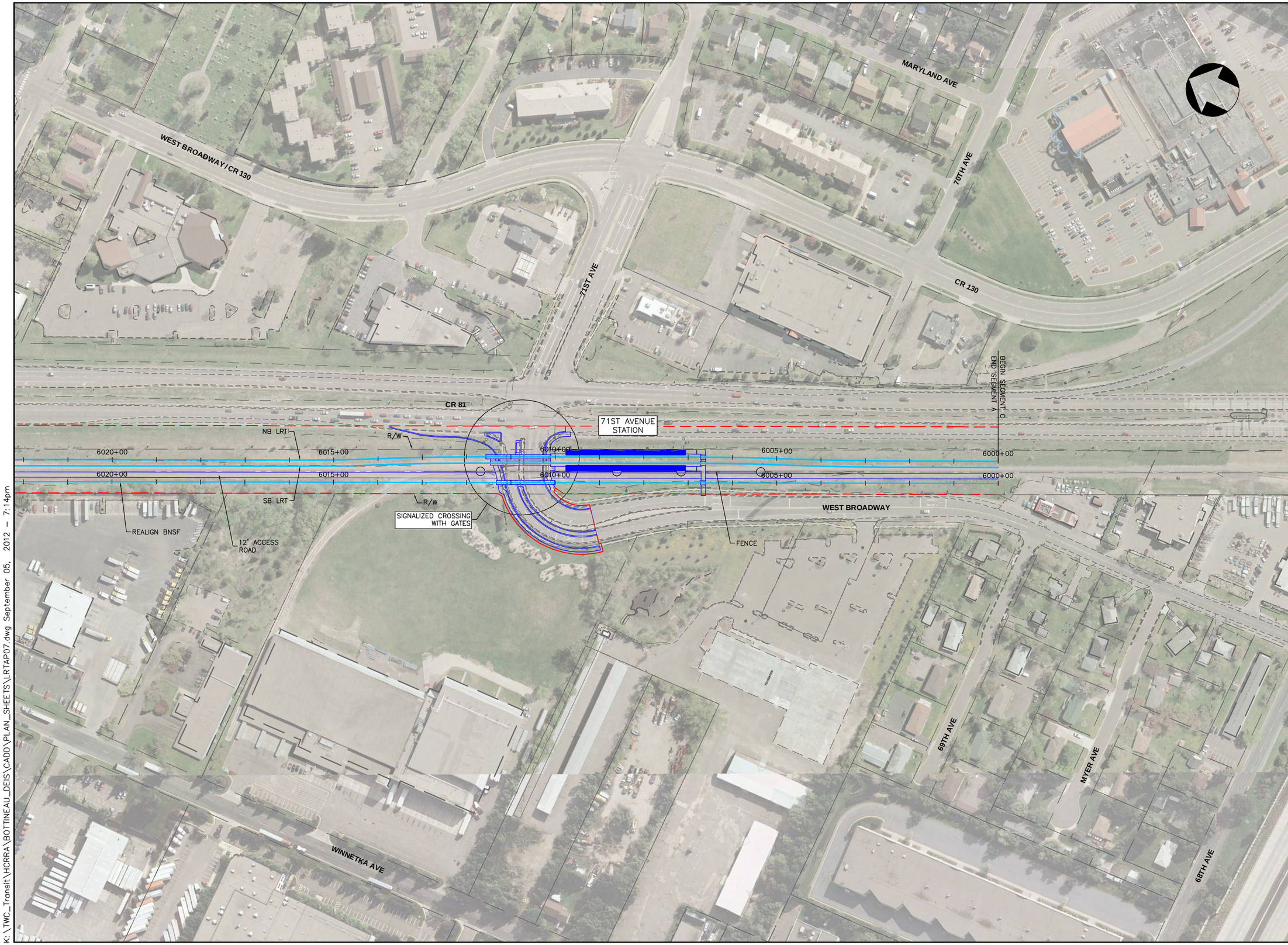

K:\TWC_Transit\HCRRA\BOTTINEAU_DEIS\CADD\PLAN_SHEETS\LRTAP07.dwg September 05, 2012 – 7:14pm

Bottineau Transitway
DRAFT ENVIRONMENTAL IMPACT STATEMENT

Hennepin

CONSULTANTS:

Kimley-Horn and Associates, Inc.
2550 UNIVERSITY AVE. WEST, SUITE 345N
ST. PAUL, MINNESOTA 55114
TEL. NO. (651) 645-4197
FAX NO. (651) 645-5116

SRF Consulting Group, Inc.

LTK Engineering Services

DRAWING NAME	LRTAP07.dwg
DESIGNED BY:	
DRAWN BY:	
CHECKED BY:	
DATE:	9/5/2012
PROJECT NO.	160528003.4.100

SCALE
0 100' 200'

BOTTINEAU TRANSITWAY
DRAFT EIS
CONCEPTUAL DESIGN

LRT ALIGNMENT A
SHEET 7 OF 21

ALIGNMENT PLAN
STA 6000+00 - 6022+00

SHEET NUMBER
7 OF 122

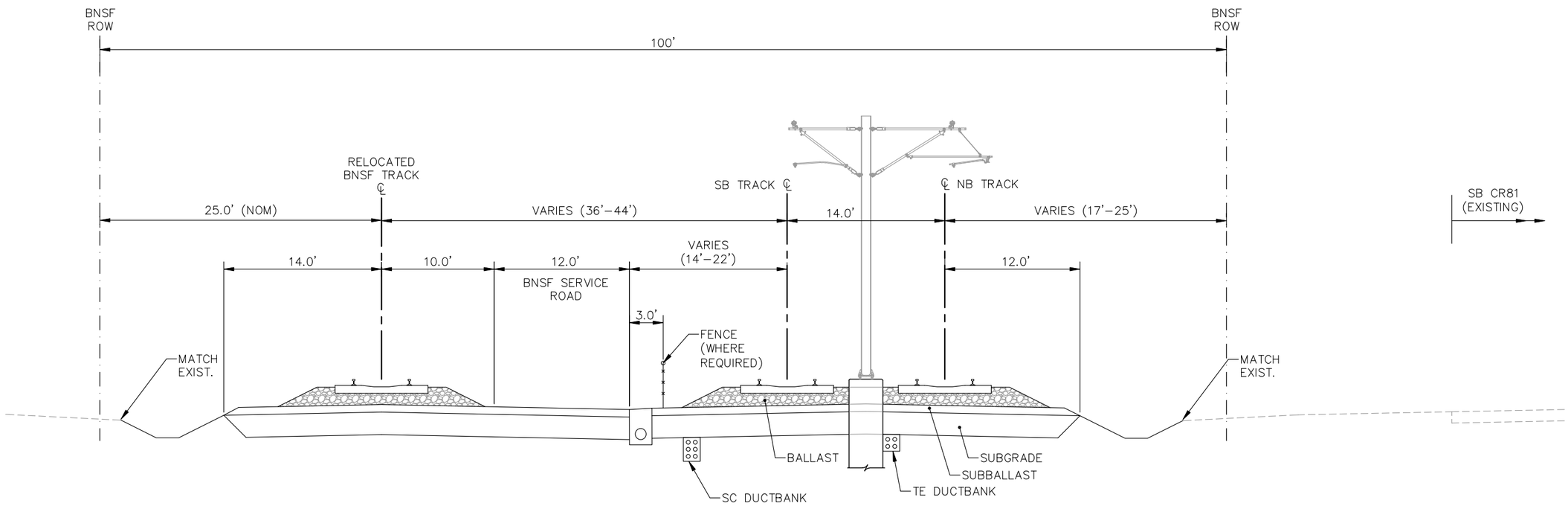

TYPICAL SECTION A-01
ALIGNMENT A - STA. 6000+00 TO STA. 6041+50

P:\Projects\C4147.02 – Bottineau DEIS\C3D\BOTT–TYP A_01.dwg August 24, 2012 – 9:17am

Bottineau Transitway
DRAFT ENVIRONMENTAL IMPACT STATEMENT

Hennepin

CONSULTANTS:

Kimley-Horn and Associates, Inc.
2550 UNIVERSITY AVE. WEST, SUITE 345N
ST. PAUL, MINNESOTA 55114
TEL. NO. (651) 645–4197
FAX. NO. (651) 645–5116

SRF Consulting Group, Inc.

LTK Engineering Services

DRAWING NAME	BOTT–TYP A_01.dwg
DESIGNED BY:	
DRAWN BY:	
CHECKED BY:	
DATE:	6/29/12
PROJECT NO.	160528003.4.100

BOTTINEAU TRANSITWAY
DRAFT EIS
CONCEPTUAL DESIGN

LRT ALIGNMENT A
SHEET 8 OF 21

TYPICAL SECTION A-01

SHEET NUMBER
8 OF 122

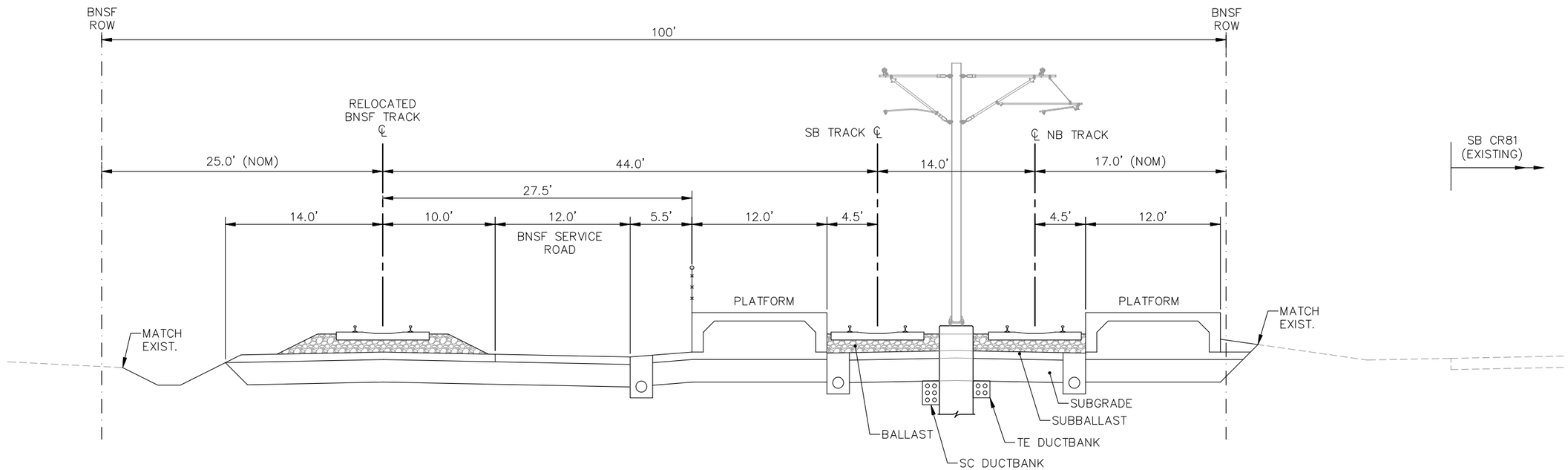

TYPICAL SECTION A-01A
ALIGNMENT A - 71ST AVENUE STATION

BottineauTransitway
DRAFT ENVIRONMENTAL IMPACT STATEMENT

Hennepin

CONSULTANTS:

Kimley-Horn and Associates, Inc.
2550 UNIVERSITY AVE. WEST, SUITE 345N
ST. PAUL, MINNESOTA 55114
TEL. NO. (651) 645-4197
FAX. NO. (651) 645-5116

SRF Consulting Group, Inc.

LTK Engineering Services

DRAWING NAME	BOTT-TYP A_01A.dwg
DESIGNED BY:	
DRAWN BY:	
CHECKED BY:	
DATE:	6/29/12
PROJECT NO.	160528003.4.100

BOTTINEAU CORRIDOR
DRAFT EIS
CONCEPTUAL DESIGN

LRT ALIGNMENT A
SHEET 9 OF 21

TYPICAL SECTION A-01A

SHEET NUMBER
9 OF 122

P:\Projects\C4147.02 - Bottineau DEIS\C3D\BOTT-TYP A_01A.dwg August 24, 2012 - 9:17am

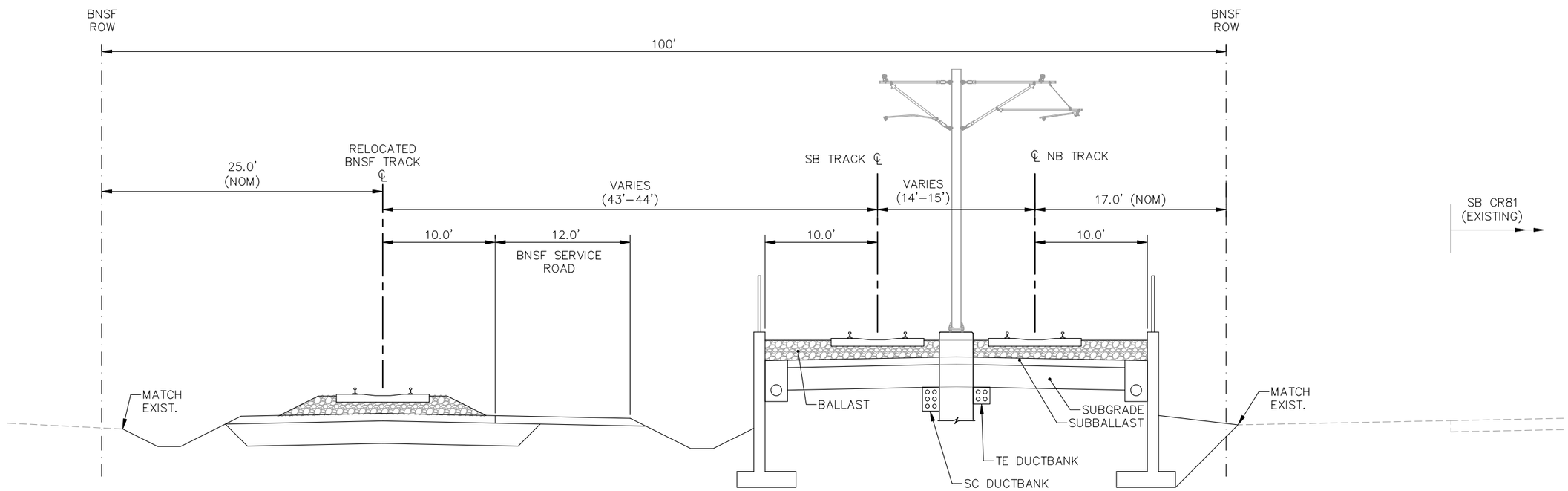

TYPICAL SECTION A-02
ALIGNMENT A - STA. 6041+50 TO STA. 6045+50

Bottineau Transitway
DRAFT ENVIRONMENTAL IMPACT STATEMENT

Hennepin

CONSULTANTS:

Kimley-Horn and Associates, Inc.
2550 UNIVERSITY AVE. WEST, SUITE 345N
ST. PAUL, MINNESOTA 55114
TEL. NO. (651) 645-4197
FAX. NO. (651) 645-5116

SRF Consulting Group, Inc.

LTK Engineering Services

DRAWING NAME	BOTT–TYP A_02.dwg
DESIGNED BY:	
DRAWN BY:	
CHECKED BY:	
DATE:	6/29/12
PROJECT NO.	160528003.4.100

BOTTINEAU CORRIDOR
DRAFT EIS
CONCEPTUAL DESIGN

LRT ALIGNMENT A
SHEET 10 OF 21

TYPICAL SECTION A-02

SHEET NUMBER
10 OF 122

P:\Projects\C4147.02 – Bottineau DEIS\C3D\BOTT–TYP A_02.dwg August 24, 2012 – 9:17am

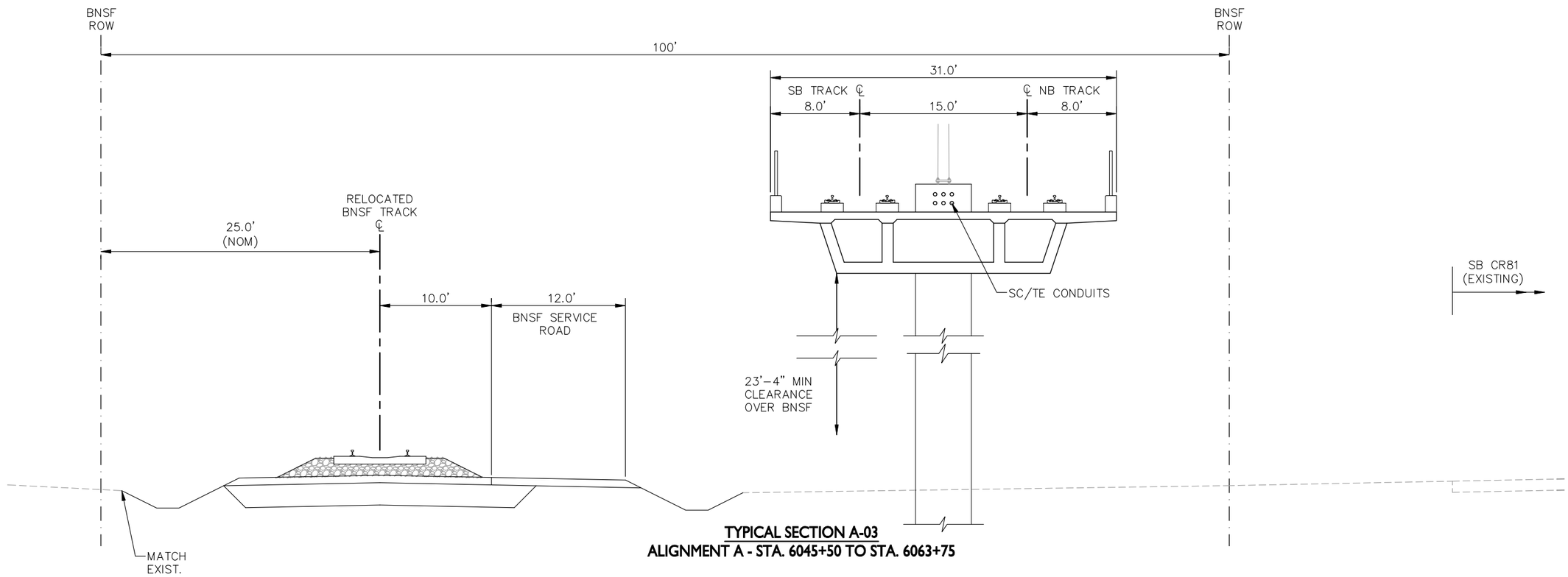

TYPICAL SECTION A-03
ALIGNMENT A - STA. 6045+50 TO STA. 6063+75

BottineauTransitway
DRAFT ENVIRONMENTAL IMPACT STATEMENT

Hennepin

CONSULTANTS:

Kimley-Horn and Associates, Inc.
2550 UNIVERSITY AVE. WEST, SUITE 345N
ST. PAUL, MINNESOTA 55114
TEL. NO. (651) 645-4197
FAX. NO. (651) 645-5116

SRF Consulting Group, Inc.

LTK Engineering Services

DRAWING NAME	BOTT-TYP A_03.dwg
DESIGNED BY:	
DRAWN BY:	
CHECKED BY:	
DATE:	6/29/12
PROJECT NO.	160528003.4.100

BOTTINEAU CORRIDOR
DRAFT EIS
CONCEPTUAL DESIGN

LRT ALIGNMENT A
SHEET 11 OF 21

TYPICAL SECTION A-03

SHEET NUMBER
11 OF 122

P:\Projects\C4147.02 - Bottineau DEIS\C3D\BOTT-TYP A_03.dwg August 24, 2012 - 9:17am

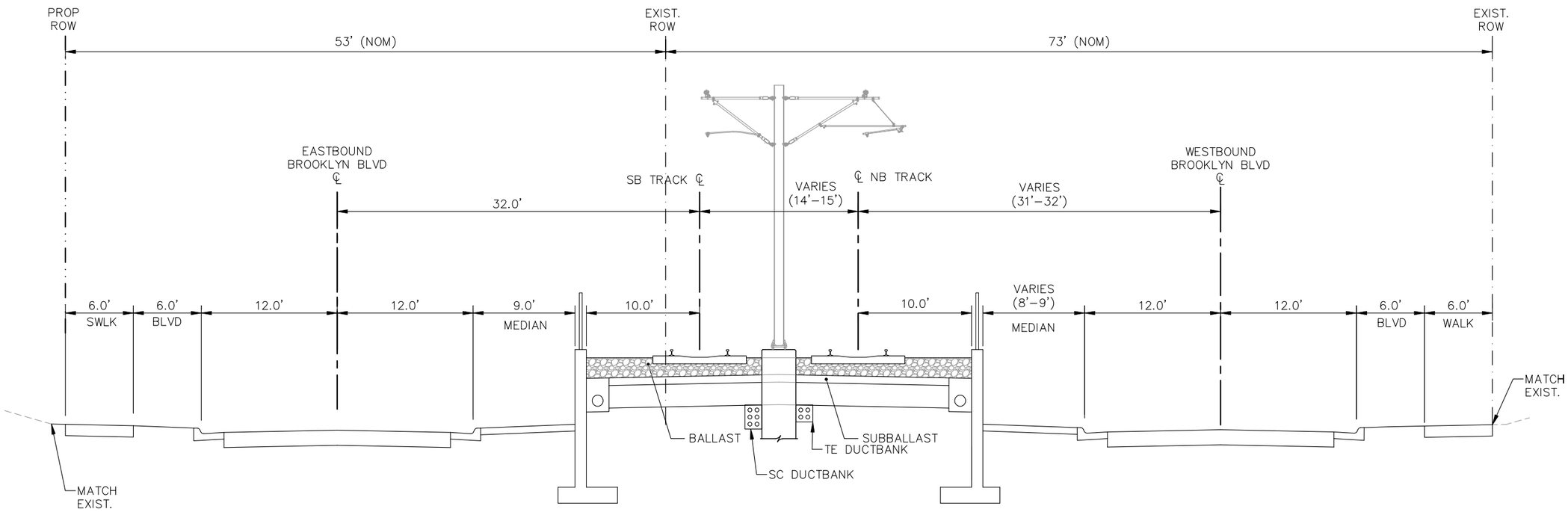

TYPICAL SECTION A-04
ALIGNMENT A - STA. 6063+75 TO STA. 6066+75

P:\Projects\C4147.02 – Bottineau DEIS\C3D\BOTT–TYP A_04.dwg August 24, 2012 – 9:17am

BottineauTransitway
DRAFT ENVIRONMENTAL IMPACT STATEMENT

Hennepin

CONSULTANTS:

Kimley-Horn and Associates, Inc.
2550 UNIVERSITY AVE. WEST, SUITE 345N
ST. PAUL, MINNESOTA 55114
TEL. NO. (651) 645-4197
FAX. NO. (651) 645-5116

SRF Consulting Group, Inc.

LTK Engineering Services

DRAWING NAME	BOTT–TYP A_04.dwg
DESIGNED BY:	
DRAWN BY:	
CHECKED BY:	
DATE:	6/29/12
PROJECT NO.	160528003.4.100

BOTTINEAU CORRIDOR
DRAFT EIS
CONCEPTUAL DESIGN

LRT ALIGNMENT A
SHEET 12 OF 21

TYPICAL SECTION A-04

SHEET NUMBER
12 OF 122

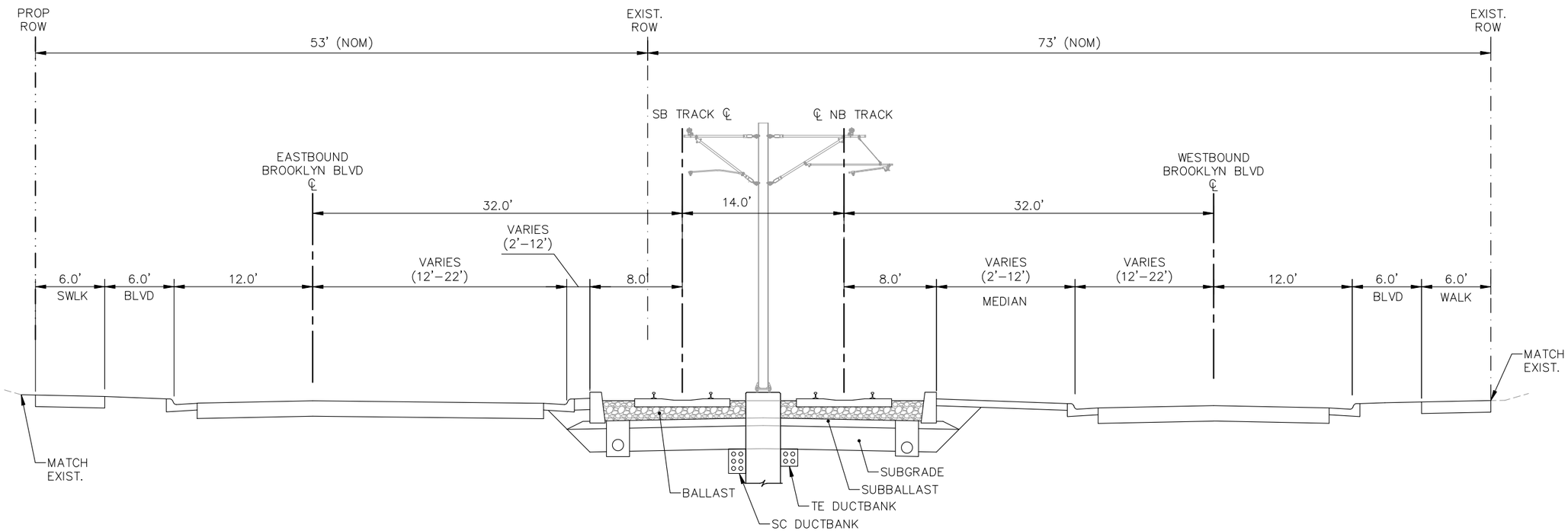

TYPICAL SECTION A-05
ALIGNMENT A - STA. 6066+75 TO STA. 6085+00

P:\Projects\C4147.02 – Bottineau DEIS\C3D\BOTT–TYP A_05.dwg August 24, 2012 – 9:18am

Bottineau Transitway
DRAFT ENVIRONMENTAL IMPACT STATEMENT

Hennepin

CONSULTANTS:

Kimley-Horn and Associates, Inc.
2550 UNIVERSITY AVE. WEST, SUITE 345N
ST. PAUL, MINNESOTA 55114
TEL. NO. (651) 645–4197
FAX. NO. (651) 645–5116

SRF Consulting Group, Inc.

LTK Engineering Services

DRAWING NAME	BOTT–TYP A_05.dwg
DESIGNED BY:	
DRAWN BY:	
CHECKED BY:	
DATE:	6/29/12
PROJECT NO.	160528003.4.100

BOTTINEAU CORRIDOR
DRAFT EIS
CONCEPTUAL DESIGN

LRT ALIGNMENT A
SHEET 13 OF 21

TYPICAL SECTION A-05

SHEET NUMBER
13 OF 122

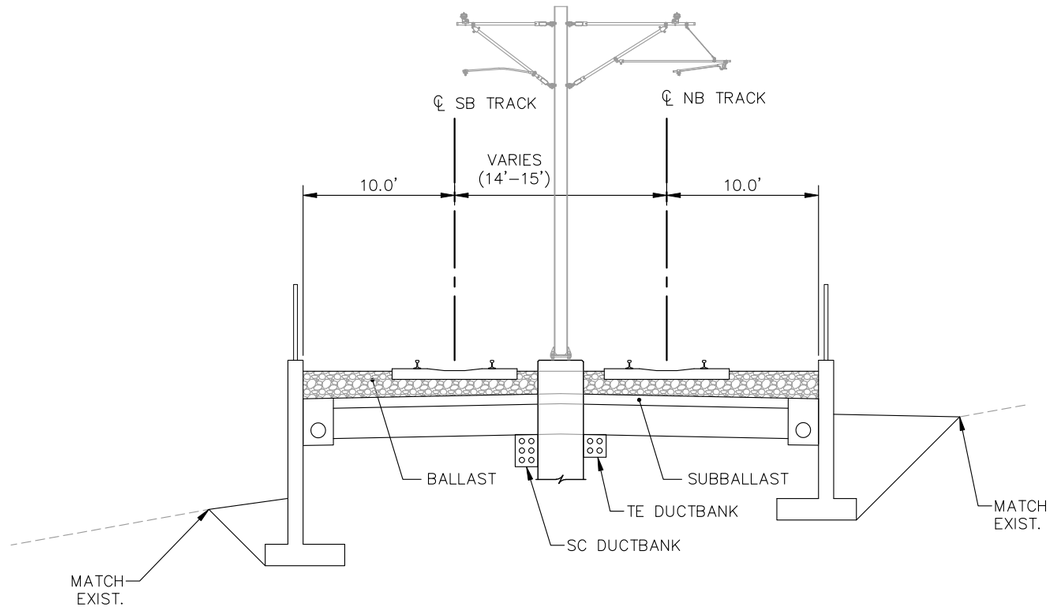

TYPICAL SECTION A-06
ALIGNMENT A - STA. 6085+00 TO 6093+50

P:\Projects\C4147.02 – Bottineau DEIS\C3D\BOTT–TYP A_06.dwg August 24, 2012 – 9:18am

BottineauTransitway
DRAFT ENVIRONMENTAL IMPACT STATEMENT

Hennepin

CONSULTANTS:

Kimley-Horn and Associates, Inc.
2550 UNIVERSITY AVE. WEST, SUITE 345N
ST. PAUL, MINNESOTA 55114
TEL. NO. (651) 645–4197
FAX. NO. (651) 645–5116

SRF Consulting Group, Inc.

LTK Engineering Services

DRAWING NAME	BOTT–TYP A_06.dwg
DESIGNED BY:	
DRAWN BY:	
CHECKED BY:	
DATE:	6/29/12
PROJECT NO.	160528003.4.100

BOTTINEAU CORRIDOR
DRAFT EIS
CONCEPTUAL DESIGN

LRT ALIGNMENT A
SHEET 14 OF 21

TYPICAL SECTION A-06

SHEET NUMBER
14 OF 122

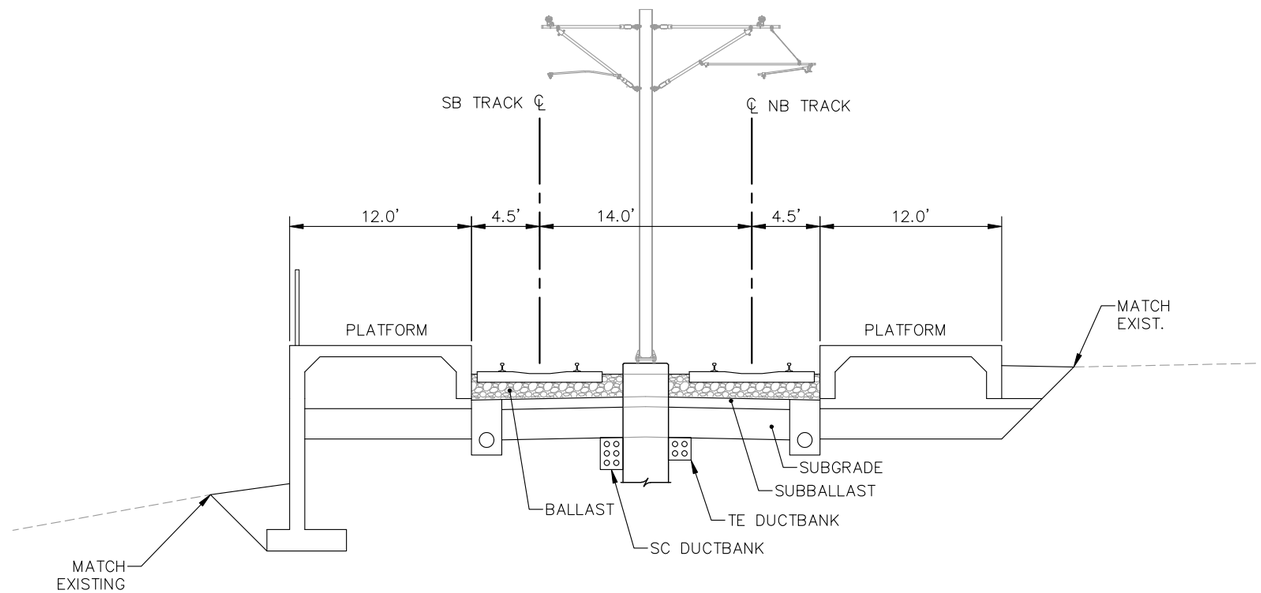

TYPICAL SECTION 06A
ALIGNMENT A - HENNEPIN TECHNICAL COLLEGE STATION

P:\Projects\C4147.02 – Bottineau DEIS\C3D\BOTT–TYP A_06A.dwg August 24, 2012 – 9:18am

BottineauTransitway
DRAFT ENVIRONMENTAL IMPACT STATEMENT

Hennepin

CONSULTANTS:

Kimley-Horn and Associates, Inc.
2550 UNIVERSITY AVE. WEST, SUITE 345N
ST. PAUL, MINNESOTA 55114
TEL. NO. (651) 645-4197
FAX. NO. (651) 645-5116

SRF Consulting Group, Inc.

LTK Engineering Services

DRAWING NAME	BOTT–TYP A_06A.dwg
DESIGNED BY:	
DRAWN BY:	
CHECKED BY:	
DATE:	6/29/12
PROJECT NO.	160528003.4.100

BOTTINEAU CORRIDOR
DRAFT EIS
CONCEPTUAL DESIGN

LRT ALIGNMENT A
SHEET 15 OF 21

TYPICAL SECTION A-06A

SHEET NUMBER
15 OF 122

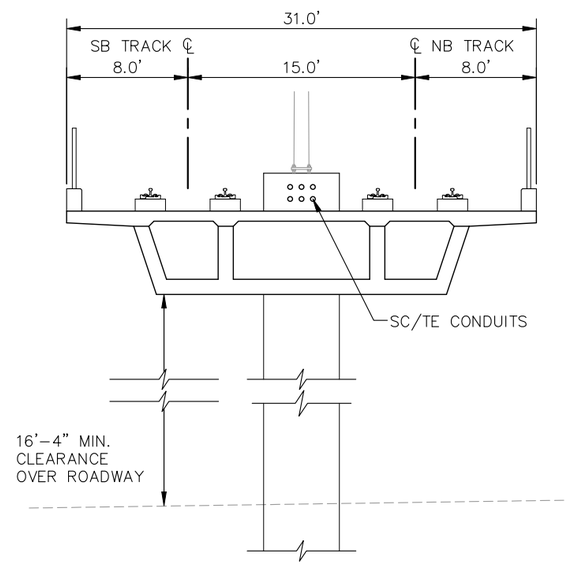

TYPICAL SECTION A-07
ALIGNMENT A - STA. 6093+50 TO STA. 6108+50

P:\Projects\C4147.02 - Bottineau DEIS\C3D\BOTT-TYP A_07.dwg August 24, 2012 - 9:18am

BottineauTransitway
DRAFT ENVIRONMENTAL IMPACT STATEMENT

Hennepin

CONSULTANTS:

Kimley-Horn and Associates, Inc.
2550 UNIVERSITY AVE. WEST, SUITE 345N
ST. PAUL, MINNESOTA 55114
TEL. NO. (651) 645-4197
FAX. NO. (651) 645-5116

SRF Consulting Group, Inc.

LTK Engineering Services

DRAWING NAME	BOTT-TYP A_07.dwg
DESIGNED BY:	
DRAWN BY:	
CHECKED BY:	
DATE:	6/29/12
PROJECT NO.	160528003.4.100

BOTTINEAU CORRIDOR
DRAFT EIS
CONCEPTUAL DESIGN

LRT ALIGNMENT A
SHEET 16 OF 21

TYPICAL SECTION A-07

SHEET NUMBER
16 OF 122

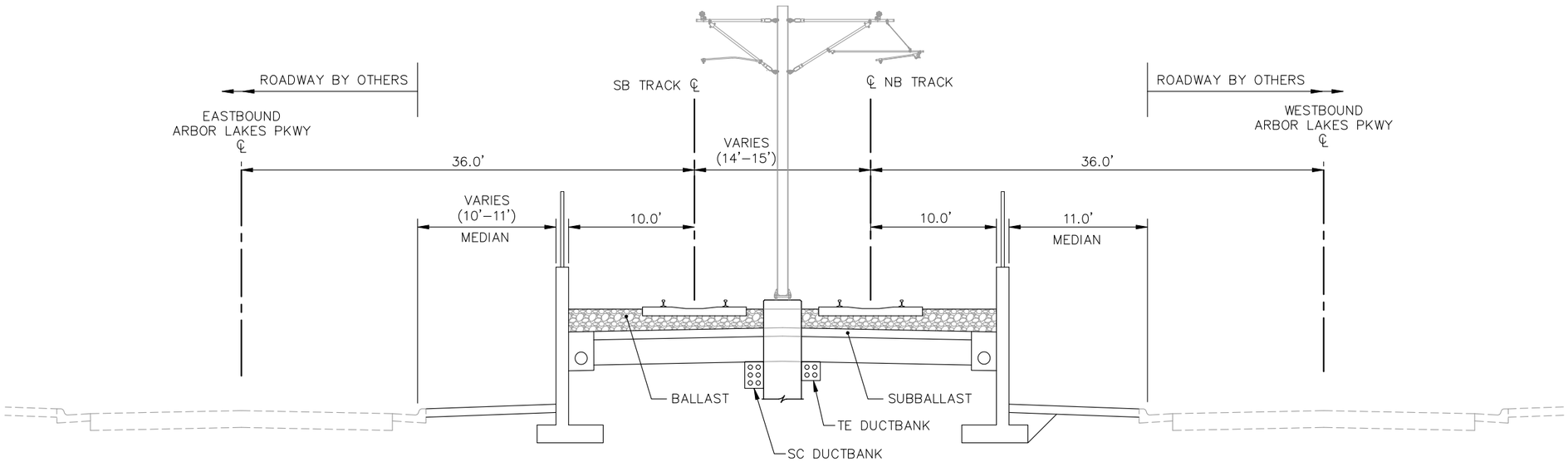

TYPICAL SECTION A-08
ALIGNMENT A - STA. 6108+50 TO STA. 6112+00

P:\Projects\C4147.02 – Bottineau DEIS\C3D\BOTT–TYP A_08.dwg August 24, 2012 – 9:18am

BottineauTransitway
DRAFT ENVIRONMENTAL IMPACT STATEMENT

Hennepin

CONSULTANTS:

Kimley-Horn and Associates, Inc.
2550 UNIVERSITY AVE. WEST, SUITE 345N
ST. PAUL, MINNESOTA 55114
TEL. NO. (651) 645–4197
FAX. NO. (651) 645–5116

SRF Consulting Group, Inc.

LTK Engineering Services

DRAWING NAME	BOTT–TYP A_08.dwg
DESIGNED BY:	
DRAWN BY:	
CHECKED BY:	
DATE:	6/29/12
PROJECT NO.	160528003.4.100

BOTTINEAU CORRIDOR
DRAFT EIS
CONCEPTUAL DESIGN

LRT ALIGNMENT A
SHEET 17 OF 21

TYPICAL SECTION A-08

SHEET NUMBER
17 OF 122

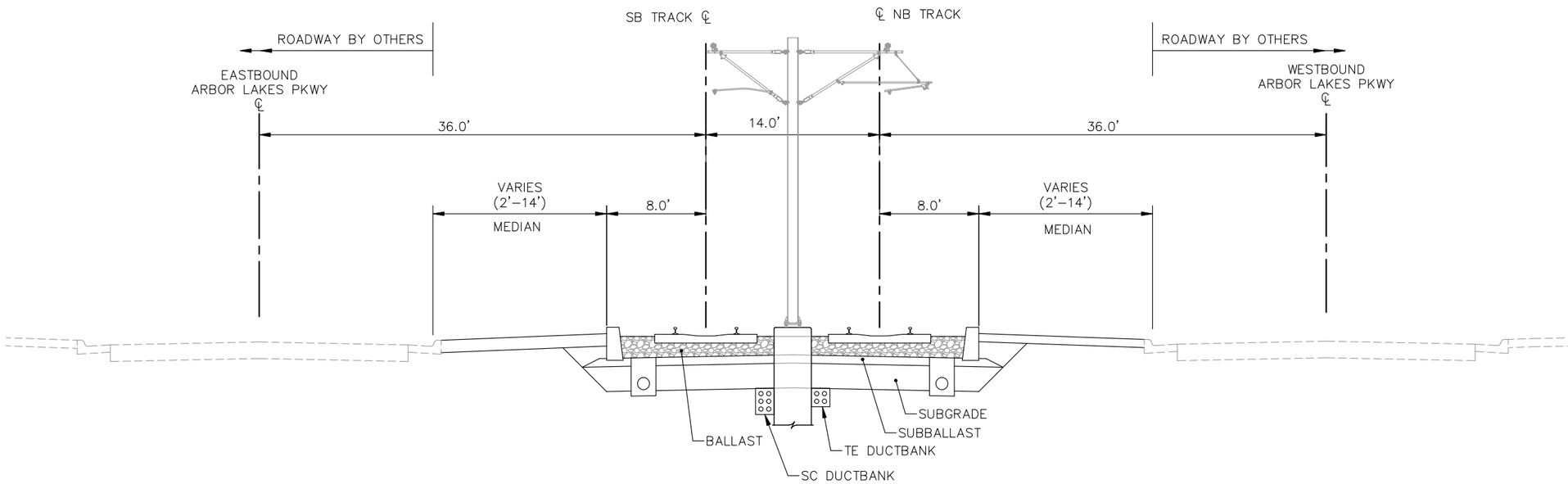

TYPICAL SECTION A-09
ALIGNMENT A - STA. 6112+00 TO STA. 6159+00

P:\Projects\C4147.02 – Bottineau DEIS\C3D\BOTT–TYP A_09.dwg August 24, 2012 – 9:18am

BottineauTransitway
DRAFT ENVIRONMENTAL IMPACT STATEMENT

Hennepin

CONSULTANTS:

Kimley-Horn and Associates, Inc.
2550 UNIVERSITY AVE. WEST, SUITE 345N
ST. PAUL, MINNESOTA 55114
TEL. NO. (651) 645-4197
FAX. NO. (651) 645-5116

SRF Consulting Group, Inc.

LTK Engineering Services

DRAWING NAME	BOTT–TYP A_09.dwg
DESIGNED BY:	
DRAWN BY:	
CHECKED BY:	
DATE:	6/29/12
PROJECT NO.	160528003.4.100

BOTTINEAU CORRIDOR
DRAFT EIS
CONCEPTUAL DESIGN

LRT ALIGNMENT A
SHEET 18 OF 21

TYPICAL SECTION A-09

SHEET NUMBER
18 OF 122

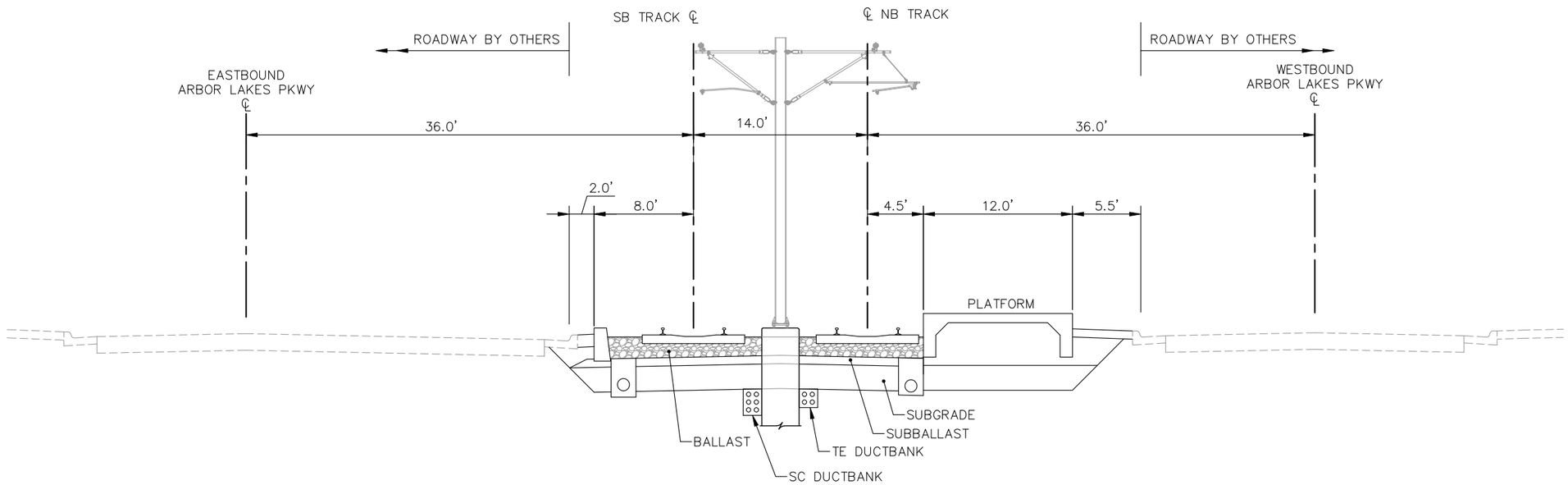

TYPICAL SECTION A-09A
ALIGNMENT A - REVERE PARKWAY STATION
(NB PLATFORM SHOWN, SB SIMMILAR)

P:\Projects\C4147.02 – Bottineau DEIS\C3D\BOTT–TYP A_09A.dwg August 24, 2012 – 9:19am

BottineauTransitway
DRAFT ENVIRONMENTAL IMPACT STATEMENT

Hennepin

CONSULTANTS:

Kimley-Horn and Associates, Inc.
2550 UNIVERSITY AVE. WEST, SUITE 345N
ST. PAUL, MINNESOTA 55114
TEL. NO. (651) 645-4197
FAX. NO. (651) 645-5116

SRF Consulting Group, Inc.

LTK Engineering Services

DRAWING NAME	BOTT–TYP A_09A.dwg
DESIGNED BY:	
DRAWN BY:	
CHECKED BY:	
DATE:	6/29/12
PROJECT NO.	160528003.4.100

BOTTINEAU CORRIDOR
DRAFT EIS
CONCEPTUAL DESIGN

LRT ALIGNMENT A
SHEET 19 OF 21

TYPICAL SECTION A-09A

SHEET NUMBER
19 OF 122

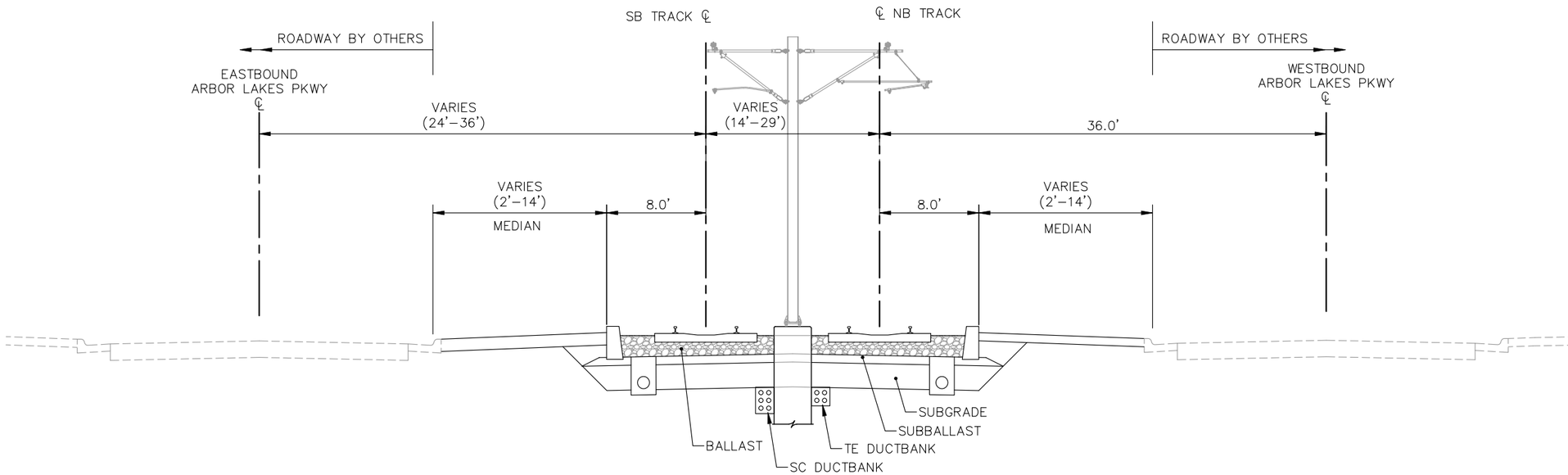

TYPICAL SECTION A-10
ALIGNMENT A - STA. 6159+00 TO STA. 6174+00

P:\Projects\C4147.02 – Bottineau DEIS\C3D\BOTT–TYP A_10.dwg August 24, 2012 – 9:19am

BottineauTransitway
DRAFT ENVIRONMENTAL IMPACT STATEMENT

Hennepin

CONSULTANTS:

Kimley-Horn and Associates, Inc.
2550 UNIVERSITY AVE. WEST, SUITE 345N
ST. PAUL, MINNESOTA 55114
TEL. NO. (651) 645–4197
FAX. NO. (651) 645–5116

SRF Consulting Group, Inc.

LTK Engineering Services

DRAWING NAME	BOTT–TYP A_10.dwg
DESIGNED BY:	
DRAWN BY:	
CHECKED BY:	
DATE:	6/29/12
PROJECT NO.	160528003.4.100

BOTTINEAU CORRIDOR
DRAFT EIS
CONCEPTUAL DESIGN

LRT ALIGNMENT A
SHEET 20 OF 21

TYPICAL SECTION A-10

SHEET NUMBER
20 OF 122

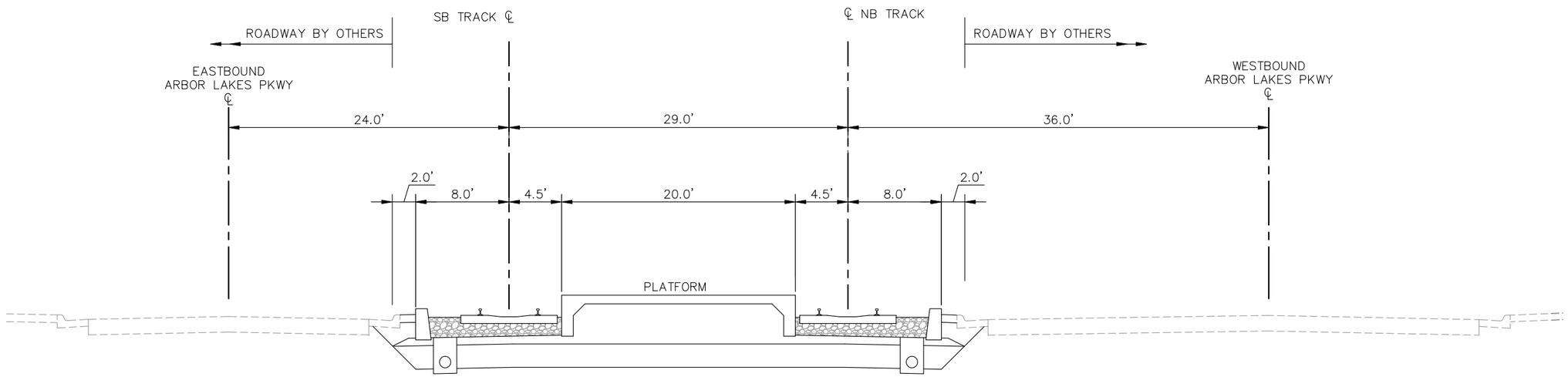

TYPICAL SECTION A-10A
ALIGNMENT A - HEMLOCK LANE STATION

P:\Projects\C4147.02 – Bottineau DEIS\C3D\BOTT–TYP A_10A.dwg August 24, 2012 – 9:19am

Bottineau Transitway
DRAFT ENVIRONMENTAL IMPACT STATEMENT

Hennepin

CONSULTANTS:

Kimley-Horn and Associates, Inc.
2550 UNIVERSITY AVE. WEST, SUITE 345N
ST. PAUL, MINNESOTA 55114
TEL. NO. (651) 645-4197
FAX. NO. (651) 645-5116

SRF Consulting Group, Inc.

LTK Engineering Services

DRAWING NAME	BOTT–TYP A_10A.dwg
DESIGNED BY:	
DRAWN BY:	
CHECKED BY:	
DATE:	6/29/12
PROJECT NO.	160528003.4.100

BOTTINEAU CORRIDOR
DRAFT EIS
CONCEPTUAL DESIGN

LRT ALIGNMENT A
SHEET 21 OF 21

TYPICAL SECTION A-10A

SHEET NUMBER
21 OF 122

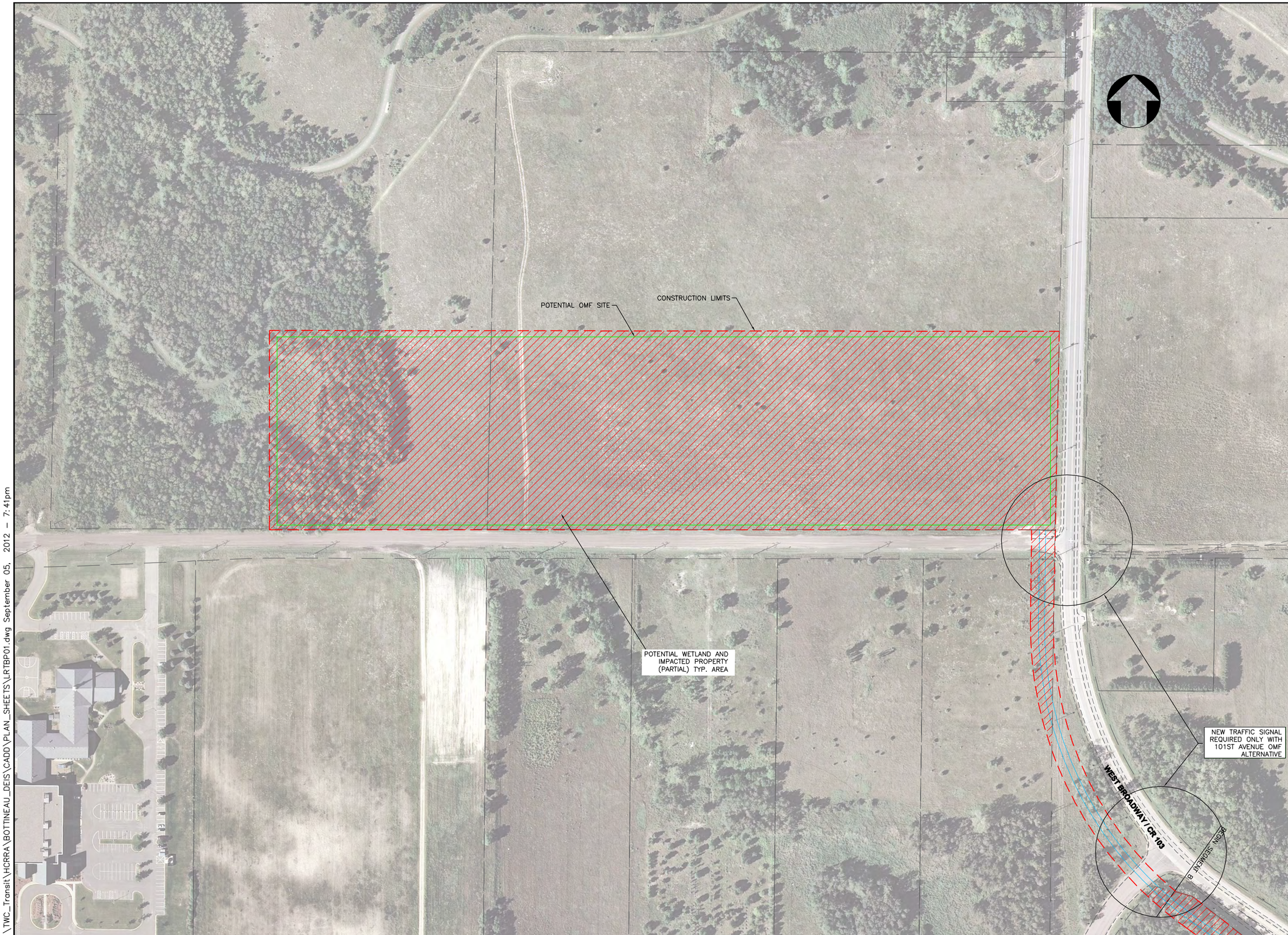

K:\TWC_Transit\HCRRA\BOTTINEAU_DEIS\CADD\PLAN_SHEETS\LRTBP01.dwg September 05, 2012 - 7:41pm

Bottineau Transitway
DRAFT ENVIRONMENTAL IMPACT STATEMENT

Hennepin

CONSULTANTS:

Kimley-Horn and Associates, Inc.
2550 UNIVERSITY AVE. WEST, SUITE 345N
ST. PAUL, MINNESOTA 55114
TEL. NO. (651) 645-4197
FAX. NO. (651) 645-5116

SRF Consulting Group, Inc.

LTK Engineering Services

DRAWNG NAME	LRTBP01.dwg
DESIGNED BY:	
DRAWN BY:	
CHECKED BY:	
DATE:	9/5/2012
PROJECT NO.	160528003.4.100

SCALE
0 100' 200'

BOTTINEAU TRANSITWAY
DRAFT EIS
CONCEPTUAL DESIGN

LRT ALIGNMENT B
SHEET 1 OF 24

ALIGNMENT PLAN

SHEET NUMBER
22 OF 122

K:\TWC_Transit\HCRRA\BOTTINEAU_DEIS\CADD\PLAN_SHEETS\LRTBP02.dwg March 11, 2014 - 8:48am

Bottineau Transitway
DRAFT ENVIRONMENTAL IMPACT STATEMENT

Hennepin

CONSULTANTS:

Kimley-Horn and Associates, Inc.
2550 UNIVERSITY AVE. WEST, SUITE 345N
ST. PAUL, MINNESOTA 55114
TEL. NO. (651) 645-4197
FAX. NO. (651) 645-5116

SRF Consulting Group, Inc.

LTK Engineering Services

DRAWING NAME	LRTBP02.dwg
DESIGNED BY:	
DRAWN BY:	
CHECKED BY:	
DATE:	3/10/2014
PROJECT NO.	160528003.4.100

SCALE
0 100' 200'

BOTTINEAU TRANSITWAY
DRAFT EIS
CONCEPTUAL DESIGN

LRT SEGMENT B
SHEET 2 OF 24

ALIGNMENT PLAN
STA 5184+00 - 5198+00

SHEET NUMBER
23 OF 122

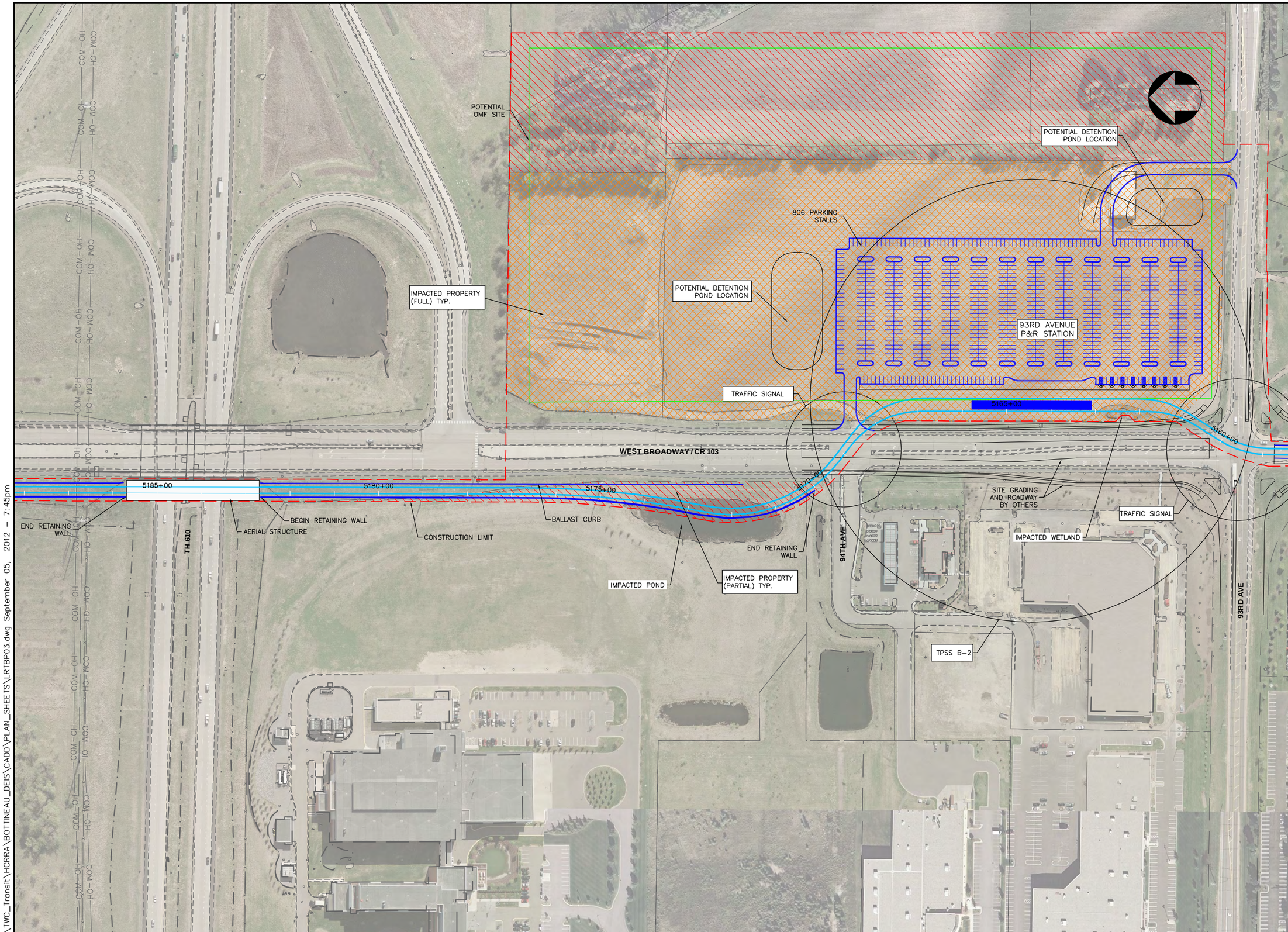

K:\TWC_Transit\HCRRA\BOTTINEAU_DEIS\CADD\PLAN_SHEETS\LRTBP03.dwg September 05, 2012 - 7:45pm

Bottineau Transitway
DRAFT ENVIRONMENTAL IMPACT STATEMENT

Hennepin

CONSULTANTS:

Kimley-Horn and Associates, Inc.
2550 UNIVERSITY AVE. WEST, SUITE 345N
ST. PAUL, MINNESOTA 55114
TEL. NO. (651) 645-4197
FAX NO. (651) 645-5116

SRF Consulting Group, Inc.

LTK Engineering Services

DRAWING NAME	LRTBP03.dwg
DESIGNED BY:	
DRAWN BY:	
CHECKED BY:	
DATE:	9/5/2012
PROJECT NO.	160528003.4.100

SCALE
0 100' 200'

BOTTINEAU TRANSITWAY
DRAFT EIS
CONCEPTUAL DESIGN

LRT ALIGNMENT B
SHEET 3 OF 24

ALIGNMENT PLAN
STA 5159+00 - 5188+00

SHEET NUMBER
24 OF 122

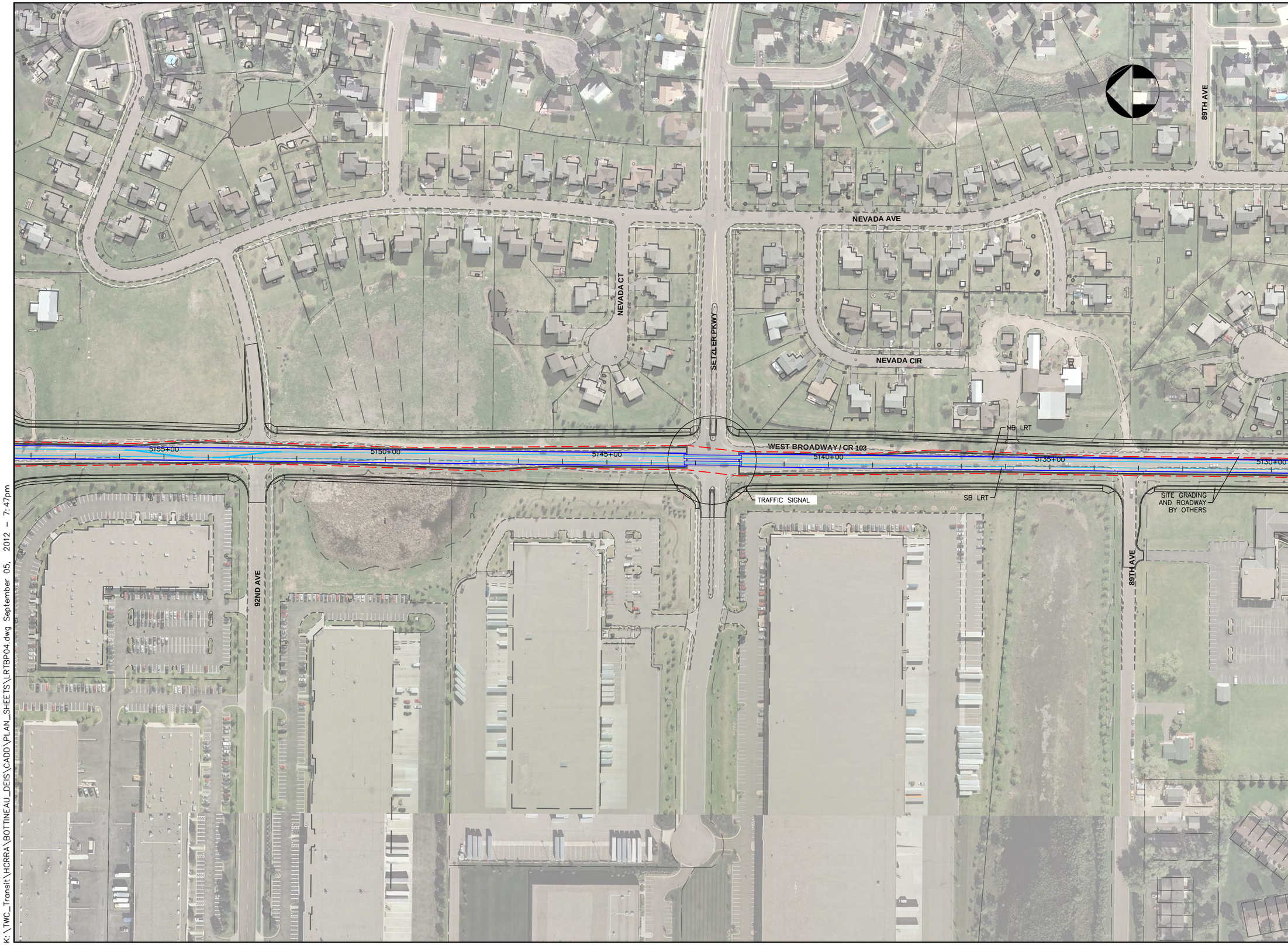

K:\TWC_Transit\HCRRA\BOTTINEAU_DEIS\CADD\PLAN_SHEETS\LRTBP04.dwg September 05, 2012 - 7:47pm

Bottineau Transitway
DRAFT ENVIRONMENTAL IMPACT STATEMENT

Hennepin

CONSULTANTS:

Kimley-Horn and Associates, Inc.
2550 UNIVERSITY AVE. WEST, SUITE 345N
ST. PAUL, MINNESOTA 55114
TEL. NO. (651) 645-4197
FAX. NO. (651) 645-5116

SRF Consulting Group, Inc.

LTK Engineering Services

DRAWING NAME	LRTBP04.dwg
DESIGNED BY:	
DRAWN BY:	
CHECKED BY:	
DATE:	9/5/2012
PROJECT NO.	160528003.4.100

SCALE
0 100' 200'

BOTTINEAU TRANSITWAY
DRAFT EIS
CONCEPTUAL DESIGN

LRT ALIGNMENT B
SHEET 4 OF 24

ALIGNMENT PLAN
STA 5130+00 - 5158+00

SHEET NUMBER
25 OF 122

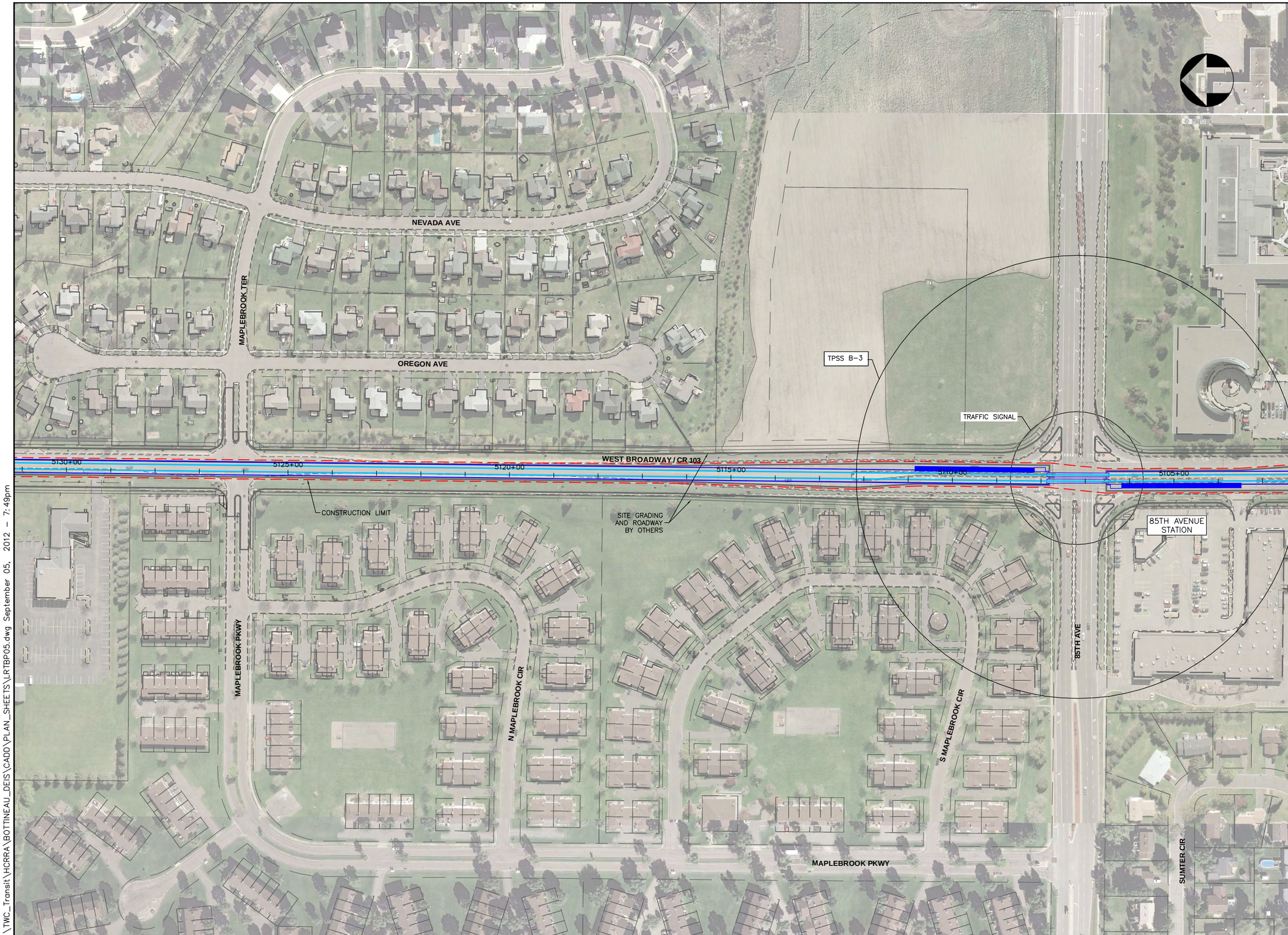

K:\TWC_Transit\HCRRA\BOTTINEAU_DEIS\CADD\PLAN_SHEETS\LRTBP05.dwg September 05, 2012 - 7:49pm

Bottineau Transitway
DRAFT ENVIRONMENTAL IMPACT STATEMENT

Hennepin

CONSULTANTS:

Kimley-Horn and Associates, Inc.
2550 UNIVERSITY AVE. WEST, SUITE 345N
ST. PAUL, MINNESOTA 55114
TEL. NO. (651) 645-4197
FAX. NO. (651) 645-5116

SRF Consulting Group, Inc.

LTK Engineering Services

DRAWING NAME	LRTBP05.dwg
DESIGNED BY:	
DRAWN BY:	
CHECKED BY:	
DATE:	9/5/2012
PROJECT NO.	160528003.4.100

SCALE
0 100' 200'

BOTTINEAU TRANSITWAY
DRAFT EIS
CONCEPTUAL DESIGN

LRT ALIGNMENT B
SHEET 5 OF 24

ALIGNMENT PLAN
STA 5103+00 - 5131+00

SHEET NUMBER
26 OF 122

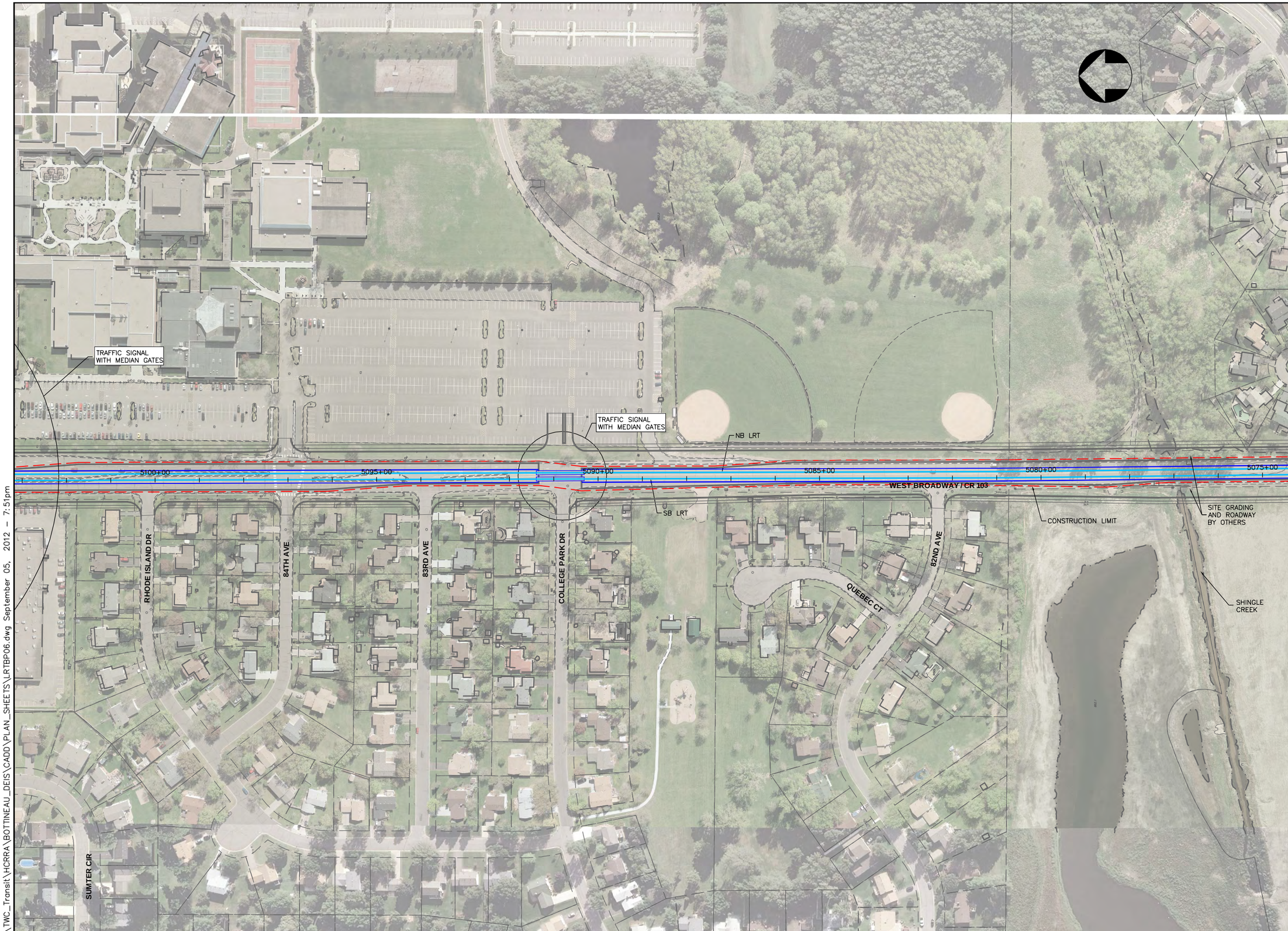

K:\TWC_Transit\HCRRA\BOTTINEAU_DEIS\CADD\PLAN_SHEETS\LRTBP06.dwg September 05, 2012 - 7:51pm

Bottineau Transitway
DRAFT ENVIRONMENTAL IMPACT STATEMENT

Hennepin

CONSULTANTS:

Kimley-Horn and Associates, Inc.
2550 UNIVERSITY AVE. WEST, SUITE 345N
ST. PAUL, MINNESOTA 55114
TEL. NO. (651) 645-4197
FAX. NO. (651) 645-5116

SRF Consulting Group, Inc.

LTK Engineering Services

DRAWING NAME	LRTBP06.dwg
DESIGNED BY:	
DRAWN BY:	
CHECKED BY:	
DATE:	9/5/2012
PROJECT NO.	160528003.4.100

SCALE
0 100' 200'

BOTTINEAU TRANSITWAY
DRAFT EIS
CONCEPTUAL DESIGN

LRT ALIGNMENT B
PAGE 6 OF 24

ALIGNMENT PLAN
STA 5075+00 - 5103+00

SHEET NUMBER
27 OF 122

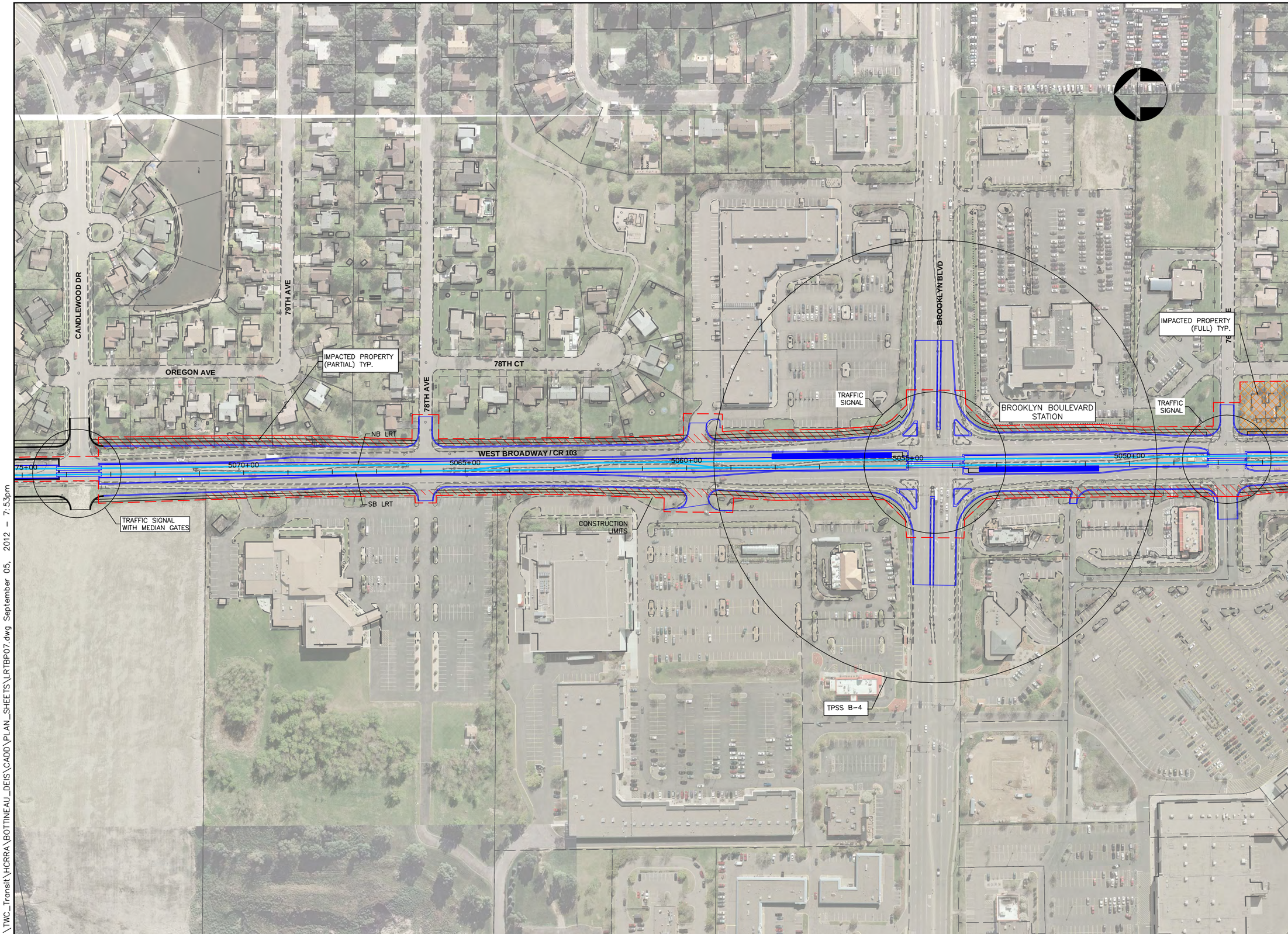

K:\TWC_Transit\HCRRA\BOTTINEAU_DEIS\CADD\PLAN_SHEETS\LRTBP07.dwg September 05, 2012 - 7:53pm

Bottineau Transitway
DRAFT ENVIRONMENTAL IMPACT STATEMENT

Hennepin

CONSULTANTS:

Kimley-Horn and Associates, Inc.
2550 UNIVERSITY AVE. WEST, SUITE 345N
ST. PAUL, MINNESOTA 55114
TEL. NO. (651) 645-4197
FAX. NO. (651) 645-5116

SRF Consulting Group, Inc.

LTK Engineering Services

DRAWING NAME	LRTBP07.dwg
DESIGNED BY:	
DRAWN BY:	
CHECKED BY:	
DATE:	9/5/2012
PROJECT NO.	160528003.4.100

SCALE
0 100' 200'

BOTTINEAU TRANSITWAY
DRAFT EIS
CONCEPTUAL DESIGN

LRT ALIGNMENT B
SHEET 7 OF 24

ALIGNMENT PLAN
STA 5047+00 - 5075+00

SHEET NUMBER
28 OF 122

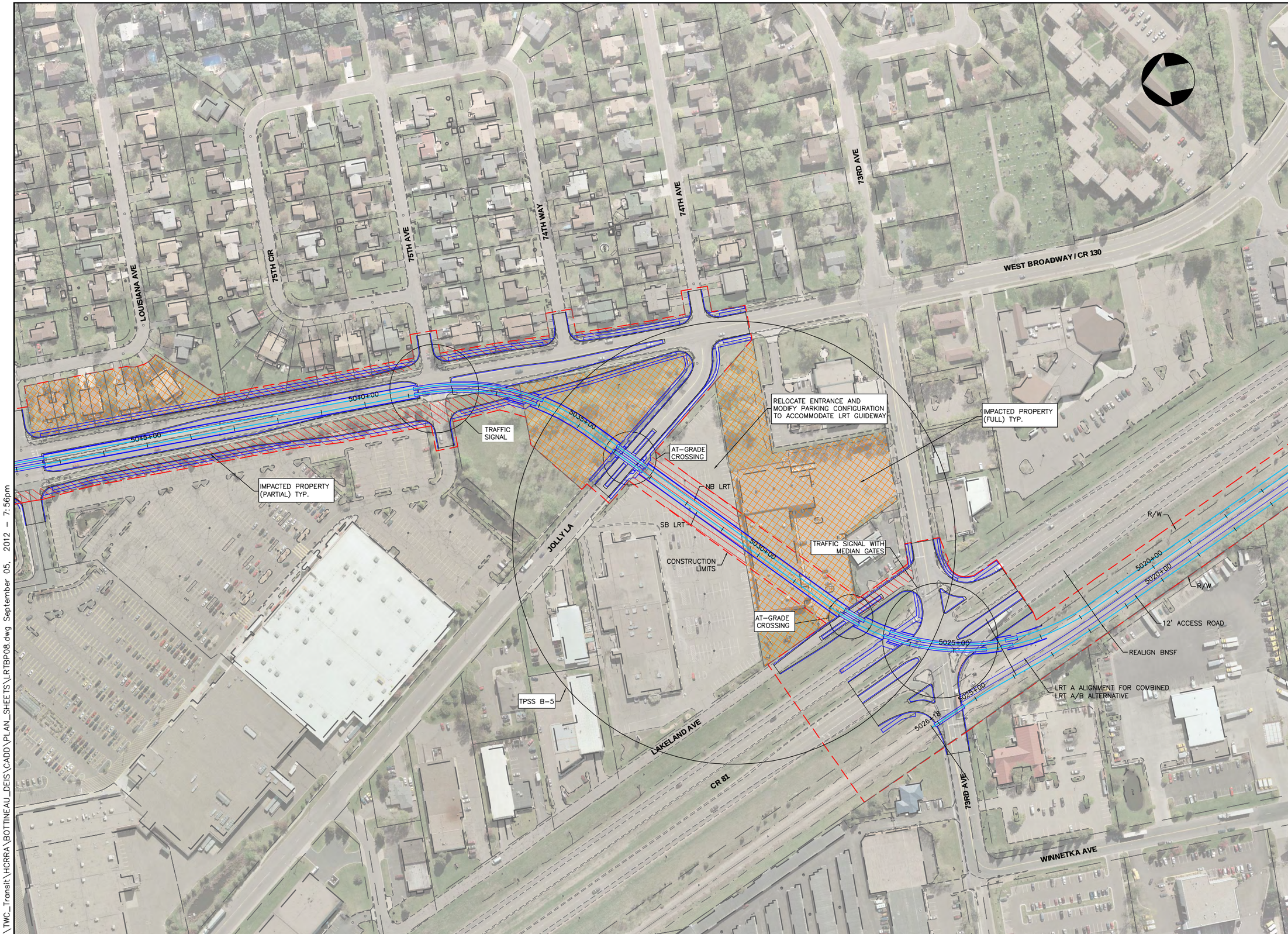

K:\TWC_Transit\HCRRA\BOTTINEAU_DEIS\CADD\PLAN_SHEETS\LRTBP08.dwg September 05, 2012 - 7:56pm

Bottineau Transitway
DRAFT ENVIRONMENTAL IMPACT STATEMENT

Hennepin

CONSULTANTS:

Kimley-Horn and Associates, Inc.
2550 UNIVERSITY AVE. WEST, SUITE 345N
ST. PAUL, MINNESOTA 55114
TEL. NO. (651) 645-4197
FAX. NO. (651) 645-5116

SRF Consulting Group, Inc.

LTK Engineering Services

DRAWING NAME	LRTBP08.dwg
DESIGNED BY:	
DRAWN BY:	
CHECKED BY:	
DATE:	9/5/2012
PROJECT NO.	160528003.4.100

SCALE
0 100' 200'

BOTTINEAU TRANSITWAY
DRAFT EIS
CONCEPTUAL DESIGN

LRT ALIGNMENT B
SHEET 8 OF 24

ALIGNMENT PLAN
STA 5017+00 - 5047+00

SHEET NUMBER
29 OF 122

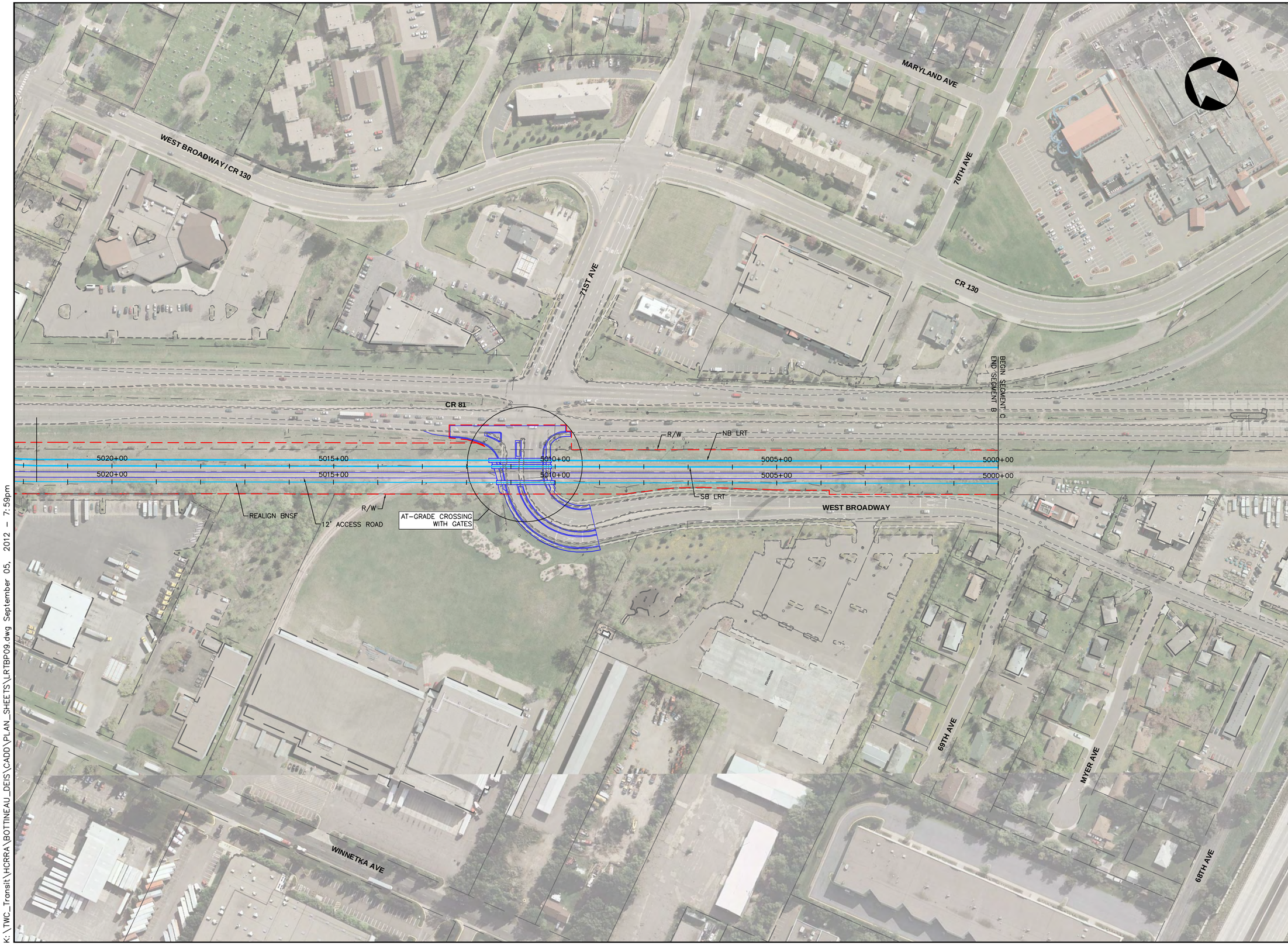

K:\TWC_Transit\HCRRA\BOTTINEAU_DEIS\CADD\PLAN_SHEETS\LRTBP09.dwg September 05, 2012 - 7:59pm

Bottineau Transitway
DRAFT ENVIRONMENTAL IMPACT STATEMENT

Hennepin

CONSULTANTS:

Kimley-Horn and Associates, Inc.
2550 UNIVERSITY AVE. WEST, SUITE 345N
ST. PAUL, MINNESOTA 55114
TEL. NO. (651) 645-4197
FAX NO. (651) 645-5116

SRF Consulting Group, Inc.

LTK Engineering Services

DRAWING NAME	LRTBP09.dwg
DESIGNED BY:	
DRAWN BY:	
CHECKED BY:	
DATE:	9/5/2012
PROJECT NO.	160528003.4.100

SCALE
0 100' 200'

BOTTINEAU TRANSITWAY
DRAFT EIS
CONCEPTUAL DESIGN

LRT ALIGNMENT B
SHEET 9 OF 24

ALIGNMENT PLAN
STA 5000+00 - 5022+00

SHEET NUMBER
30 OF 122

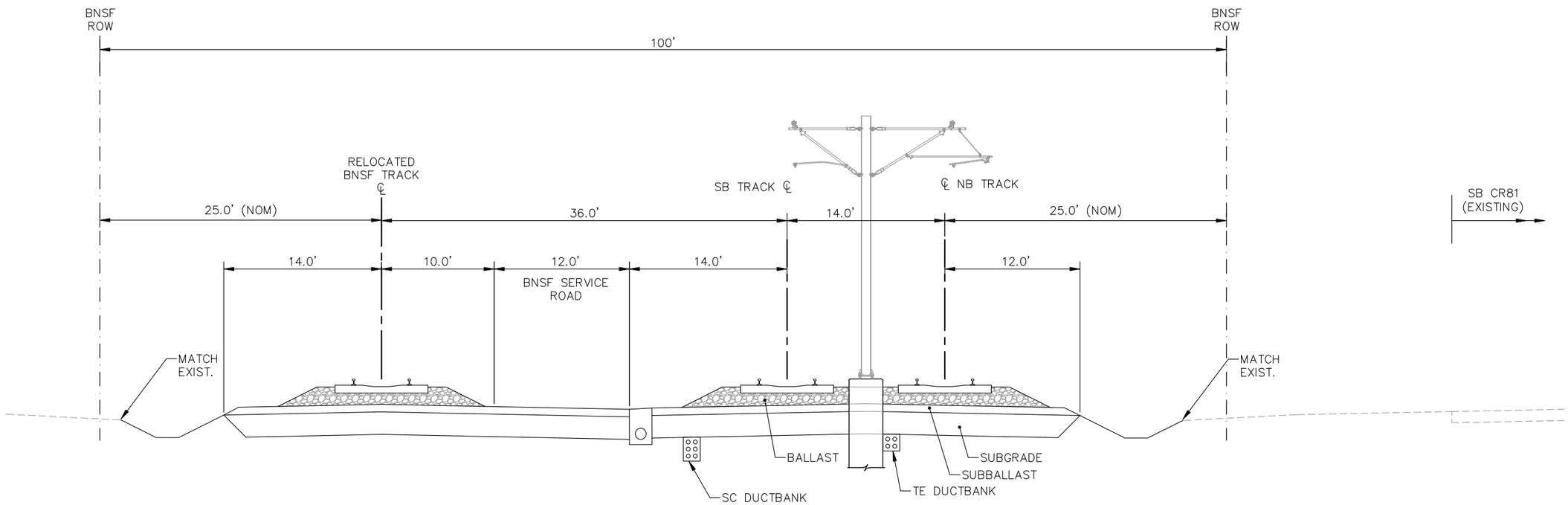

TYPICAL SECTION B-01
ALIGNMENT B - STA. 5000+00 TO STA. 5023+00

NOTE: STATIONING REPRESENTS THE SB LRT TRACK

Bottineau Transitway
DRAFT ENVIRONMENTAL IMPACT STATEMENT

Hennepin

CONSULTANTS:

Kimley-Horn and Associates, Inc.
2550 UNIVERSITY AVE. WEST, SUITE 345N
ST. PAUL, MINNESOTA 55114
TEL. NO. (651) 645-4197
FAX. NO. (651) 645-5116

SRF Consulting Group, Inc.

LTK Engineering Services

DRAWING NAME	BOTT-TYP B_01.dwg
DESIGNED BY:	
DRAWN BY:	
CHECKED BY:	
DATE:	6/29/12
PROJECT NO.	160528003.4.100

BOTTINEAU CORRIDOR
DRAFT EIS
CONCEPTUAL DESIGN

LRT ALIGNMENT B
SHEET 10 OF 24

TYPICAL SECTION B-01

SHEET NUMBER
31 OF 122

P:\Projects\C4147.02 - Bottineau DEIS\C3D\BOTT-TYP B_01.dwg August 24, 2012 - 9:21am

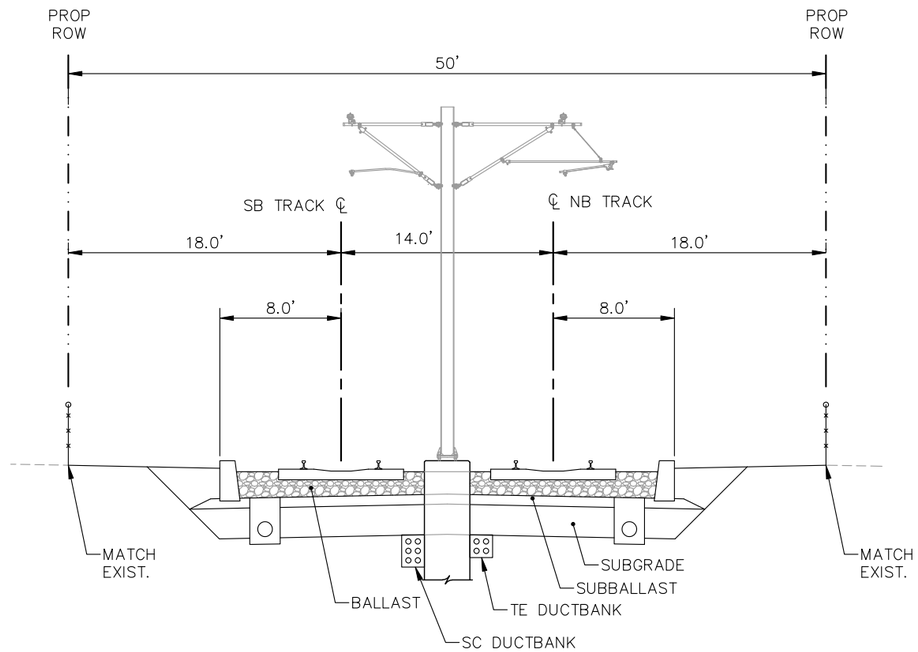

TYPICAL SECTION B-02
ALIGNMENT B - STA. 5023+00 TO STA. 5038+00

NOTE: STATIONING REPRESENTS THE SB LRT TRACK

BottineauTransitway
DRAFT ENVIRONMENTAL IMPACT STATEMENT

Hennepin

CONSULTANTS:

Kimley-Horn and Associates, Inc.
2550 UNIVERSITY AVE. WEST, SUITE 345N
ST. PAUL, MINNESOTA 55114
TEL. NO. (651) 645-4197
FAX. NO. (651) 645-5116

SRF Consulting Group, Inc.

LTK Engineering Services

DRAWING NAME	BOTT-TYP B_02.dwg
DESIGNED BY:	
DRAWN BY:	
CHECKED BY:	
DATE:	6/29/12
PROJECT NO.	160528003.4.100

BOTTINEAU CORRIDOR
DRAFT EIS
CONCEPTUAL DESIGN

LRT ALIGNMENT B
SHEET 11 OF 24

TYPICAL SECTION B-02

SHEET NUMBER
32 OF 122

P:\Projects\C4147.02 - Bottineau DEIS\C3D\BOTT-TYP B_02.dwg August 24, 2012 - 9:21am

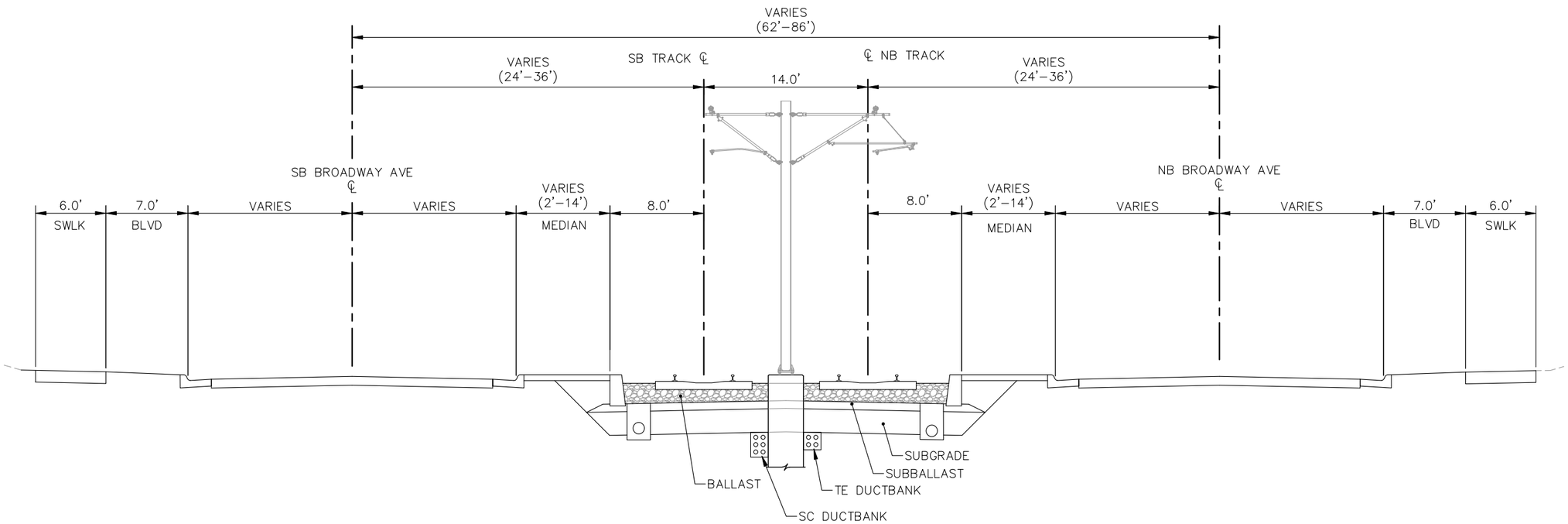

TYPICAL SECTION B-03
ALIGNMENT B - STA. 5038+00 TO STA. 5066+00

NOTE: STATIONING REPRESENTS THE SB LRT TRACK

BottineauTransitway
DRAFT ENVIRONMENTAL IMPACT STATEMENT

Hennepin

CONSULTANTS:

Kimley-Horn and Associates, Inc.
2550 UNIVERSITY AVE. WEST, SUITE 345N
ST. PAUL, MINNESOTA 55114
TEL. NO. (651) 645-4197
FAX. NO. (651) 645-5116

SRF Consulting Group, Inc.

LTK Engineering Services

DRAWING NAME	BOTT–TYP B_03.dwg
DESIGNED BY:	
DRAWN BY:	
CHECKED BY:	
DATE:	6/29/12
PROJECT NO.	160528003.4.100

BOTTINEAU CORRIDOR
DRAFT EIS
CONCEPTUAL DESIGN

LRT ALIGNMENT B
SHEET 12 OF 24

TYPICAL SECTION B-03

SHEET NUMBER
33 OF 122

P:\Projects\C4147.02 – Bottineau DEIS\C3D\BOTT–TYP B_03.dwg August 24, 2012 – 9:21am

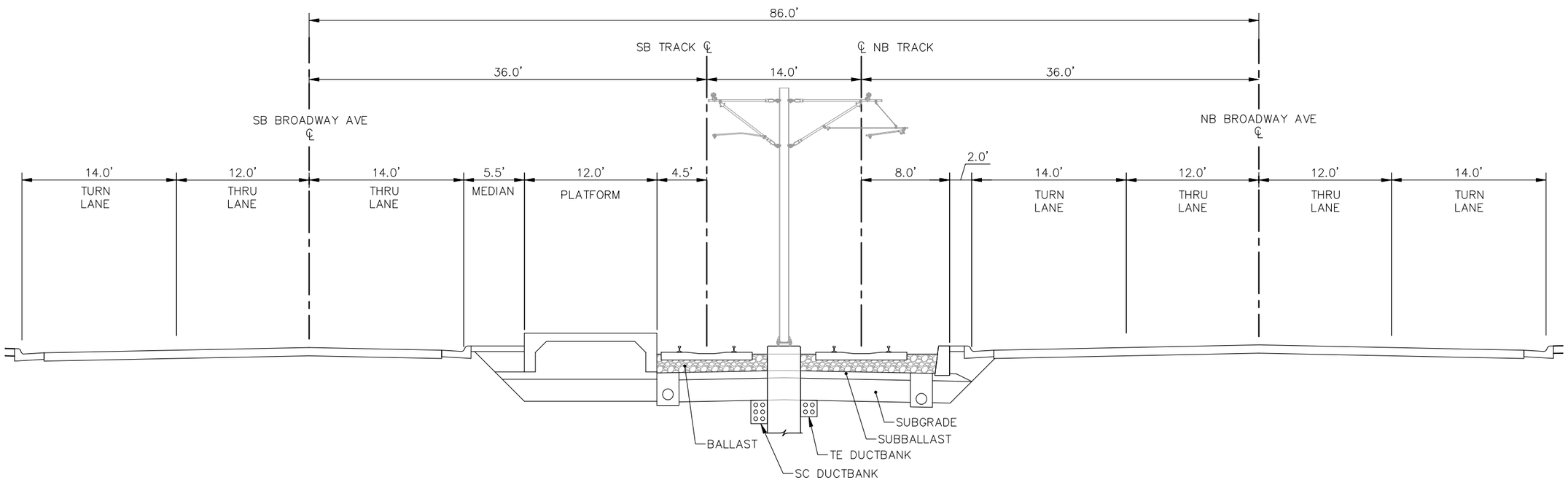

TYPICAL SECTION B-03A
ALIGNMENT B - BROOKLYN BLVD STATION
(SB PLATFORM SHOWN, NB SIMILAR)

NOTE: STATIONING REPRESENTS THE SB LRT TRACK

P:\Projects\C4147.02 - Bottineau DEIS\C3D\BOTT-TYP B_03A.dwg August 24, 2012 - 9:21am

BottineauTransitway
DRAFT ENVIRONMENTAL IMPACT STATEMENT

Hennepin

CONSULTANTS:

Kimley-Horn and Associates, Inc.
2550 UNIVERSITY AVE. WEST, SUITE 345N
ST. PAUL, MINNESOTA 55114
TEL. NO. (651) 645-4197
FAX. NO. (651) 645-5116

SRF Consulting Group, Inc.

LTK Engineering Services

DRAWING NAME	BOTT-TYP B_03A.dwg
DESIGNED BY:	
DRAWN BY:	
CHECKED BY:	
DATE:	6/29/12
PROJECT NO.	160528003.4.100

BOTTINEAU CORRIDOR
DRAFT EIS
CONCEPTUAL DESIGN

LRT ALIGNMENT B
SHEET 13 OF 24

TYPICAL SECTION B-03A

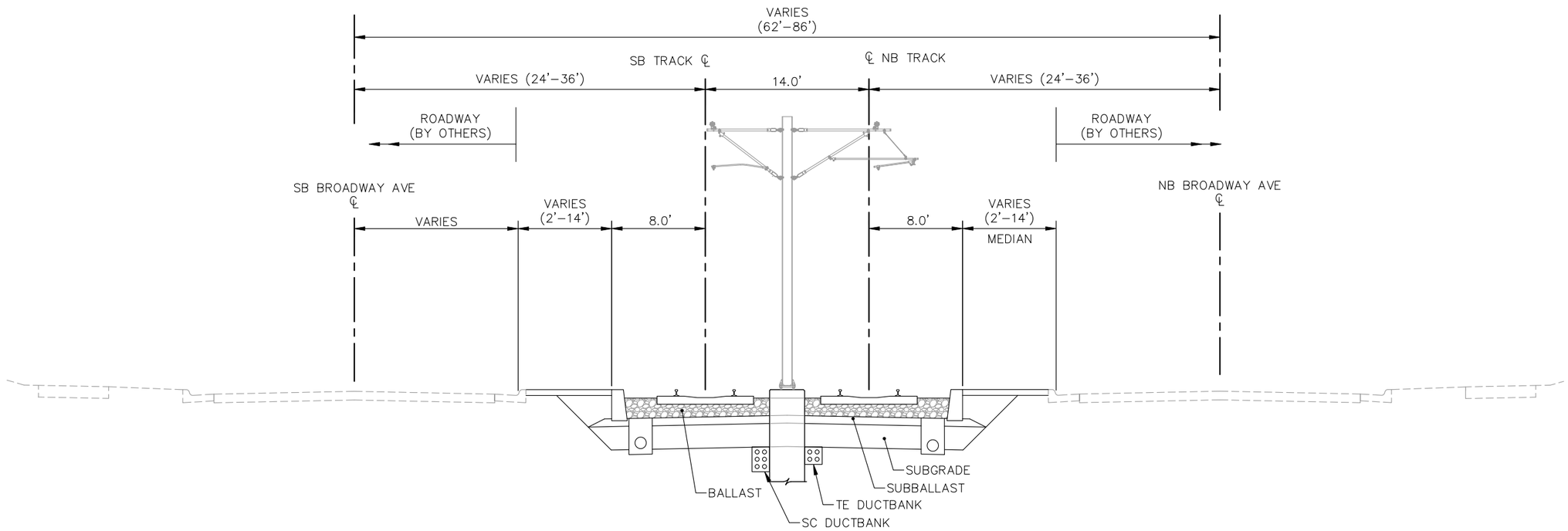

TYPICAL SECTION B-04
ALIGNMENT B - STA. 5066+00 TO STA. 5159+00

NOTE: STATIONING REPRESENTS THE SB LRT TRACK

P:\Projects\C4147.02 – Bottineau DEIS\C3D\BOTT–TYP B_04.dwg August 24, 2012 – 9:22am

Bottineau Transitway
DRAFT ENVIRONMENTAL IMPACT STATEMENT

Hennepin

CONSULTANTS:

Kimley-Horn and Associates, Inc.
2550 UNIVERSITY AVE. WEST, SUITE 345N
ST. PAUL, MINNESOTA 55114
TEL. NO. (651) 645–4197
FAX. NO. (651) 645–5116

SRF Consulting Group, Inc.

LTK Engineering Services

DRAWING NAME	BOTT–TYP B_04.dwg
DESIGNED BY:	
DRAWN BY:	
CHECKED BY:	
DATE:	6/29/12
PROJECT NO.	160528003.4.100

BOTTINEAU CORRIDOR
DRAFT EIS
CONCEPTUAL DESIGN

LRT ALIGNMENT B
SHEET 14 OF 24

TYPICAL SECTION B-04

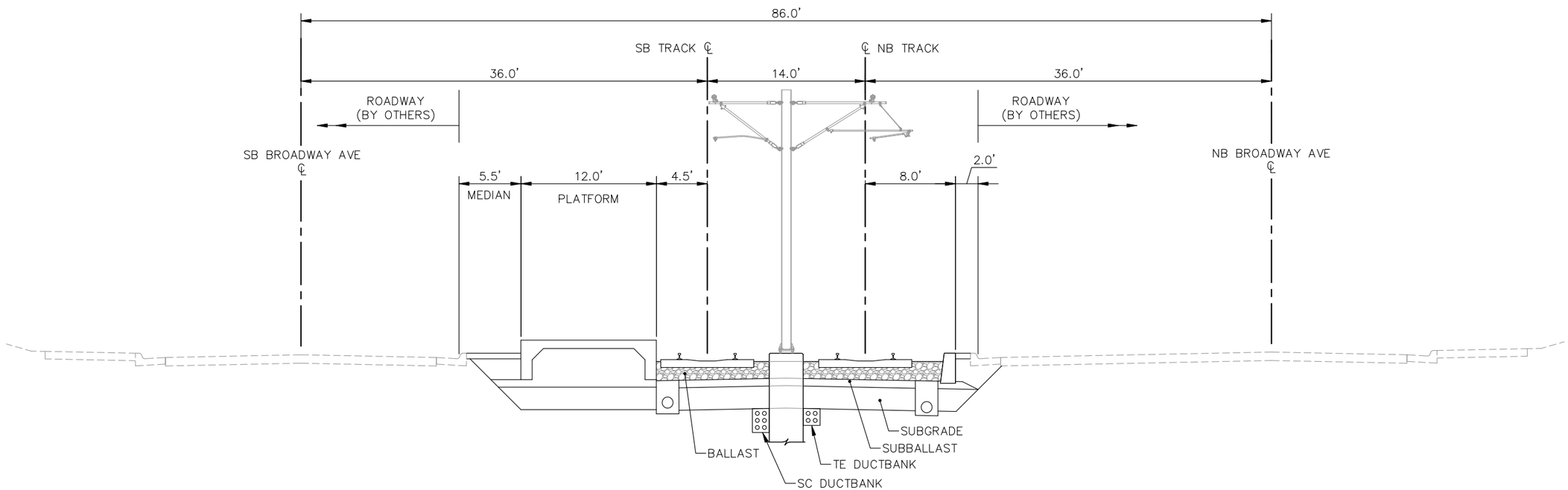

TYPICAL SECTION B-04A
ALIGNMENT B - 85TH AVENUE STATION
(SB PLATFORM SHOWN, NB SIMILAR)

NOTE: STATIONING REPRESENTS THE SB LRT TRACK

BottineauTransitway
DRAFT ENVIRONMENTAL IMPACT STATEMENT

Hennepin

CONSULTANTS:

Kimley-Horn and Associates, Inc.
2550 UNIVERSITY AVE. WEST, SUITE 345N
ST. PAUL, MINNESOTA 55114
TEL. NO. (651) 645-4197
FAX. NO. (651) 645-5116

SRF Consulting Group, Inc.

LTK Engineering Services

DRAWING NAME	BOTT-TYP B_04A.dwg
DESIGNED BY:	
DRAWN BY:	
CHECKED BY:	
DATE:	6/29/12
PROJECT NO.	160528003.4.100

BOTTINEAU CORRIDOR
DRAFT EIS
CONCEPTUAL DESIGN

LRT ALIGNMENT B
SHEET 15 OF 24

TYPICAL SECTION B-04A

P:\Projects\C4147.02 - Bottineau DEIS\C3D\BOTT-TYP B_04A.dwg August 24, 2012 - 9:22am

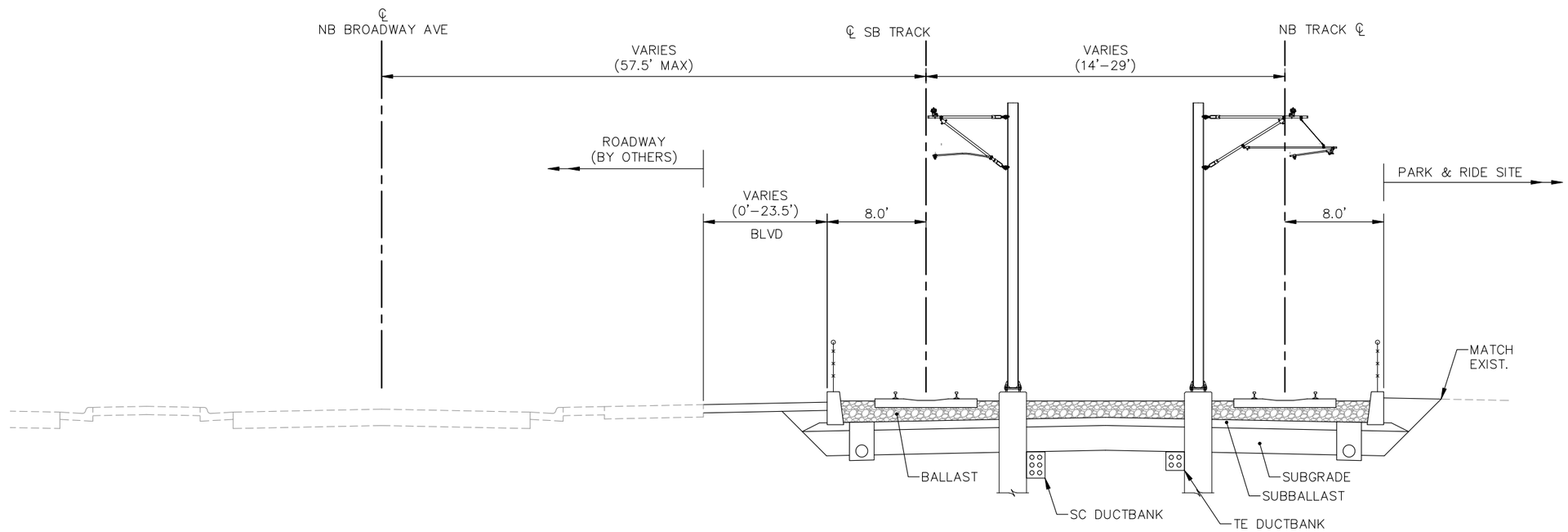

TYPICAL SECTION B-05
ALIGNMENT B - STA. 5159+00 TO 5169+00

NOTE: STATIONING REPRESENTS THE SB LRT TRACK

Bottineau Transitway
DRAFT ENVIRONMENTAL IMPACT STATEMENT

Hennepin

CONSULTANTS:

Kimley-Horn and Associates, Inc.
2550 UNIVERSITY AVE. WEST, SUITE 345N
ST. PAUL, MINNESOTA 55114
TEL. NO. (651) 645-4197
FAX. NO. (651) 645-5116

SRF Consulting Group, Inc.

LTK Engineering Services

DRAWING NAME	BOTT–TYP B_05.dwg
DESIGNED BY:	
DRAWN BY:	
CHECKED BY:	
DATE:	6/29/12
PROJECT NO.	160528003.4.100

BOTTINEAU CORRIDOR
DRAFT EIS
CONCEPTUAL DESIGN

LRT ALIGNMENT B
SHEET 16 OF 24

TYPICAL SECTION B-05

SHEET NUMBER
37 OF 122

P:\Projects\C4147.02 – Bottineau DEIS\C3D\BOTT–TYP B_05.dwg August 24, 2012 – 9:22am

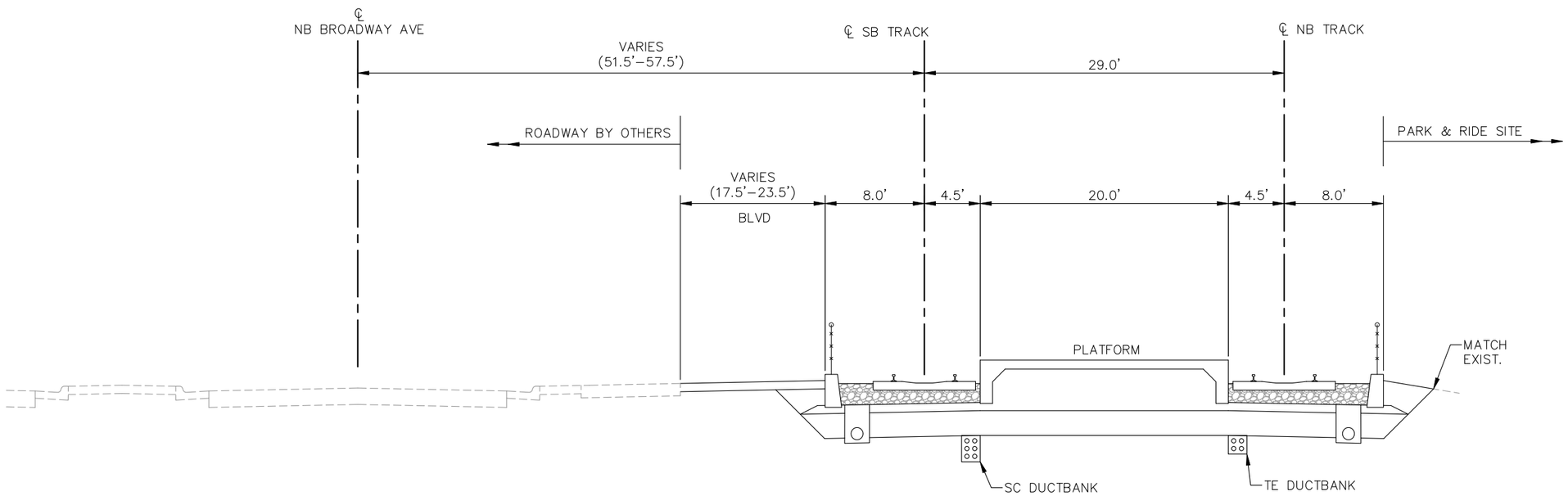

TYPICAL SECTION B-05A
ALIGNMENT B - 93RD AVENUE STATION

NOTE: STATIONING REPRESENTS THE SB LRT TRACK

P:\Projects\C4147.02 – Bottineau DEIS\C3D\BOTT–TYP B_05A.dwg August 24, 2012 – 9:22am

Bottineau Transitway
DRAFT ENVIRONMENTAL IMPACT STATEMENT

Hennepin

CONSULTANTS:

Kimley-Horn and Associates, Inc.
2550 UNIVERSITY AVE. WEST, SUITE 345N
ST. PAUL, MINNESOTA 55114
TEL. NO. (651) 645-4197
FAX. NO. (651) 645-5116

SRF Consulting Group, Inc.

LTK Engineering Services

DRAWING NAME	BOTT–TYP B_05A.dwg
DESIGNED BY:	
DRAWN BY:	
CHECKED BY:	
DATE:	6/29/12
PROJECT NO.	160528003.4.100

BOTTINEAU CORRIDOR
DRAFT EIS
CONCEPTUAL DESIGN

LRT ALIGNMENT B
SHEET 17 OF 24

TYPICAL SECTION B-05A

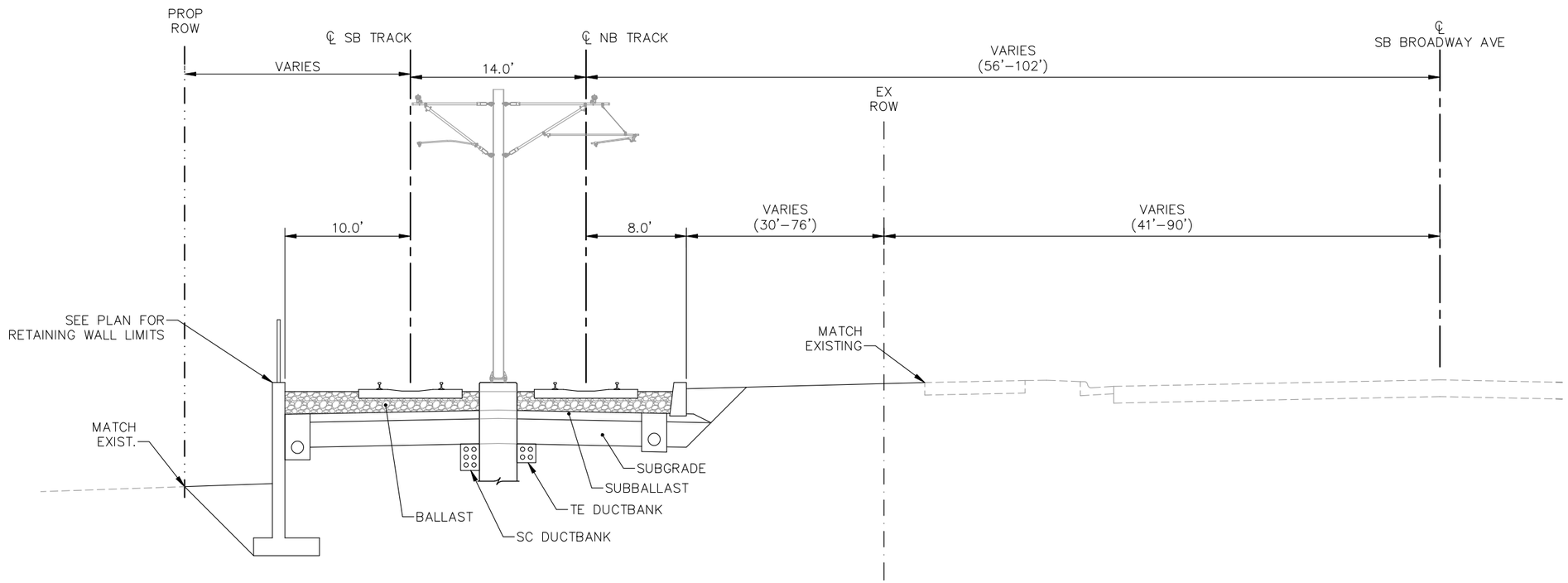

TYPICAL SECTION B-06
ALIGNMENT B - STA. 5169+00 TO STA. 5193+00

NOTE: STATIONING REPRESENTS THE SB LRT TRACK

BottineauTransitway
DRAFT ENVIRONMENTAL IMPACT STATEMENT

Hennepin

CONSULTANTS:

Kimley-Horn and Associates, Inc.
2550 UNIVERSITY AVE. WEST, SUITE 345N
ST. PAUL, MINNESOTA 55114
TEL. NO. (651) 645-4197
FAX. NO. (651) 645-5116

SRF Consulting Group, Inc.

LTK Engineering Services

DRAWING NAME	BOTT–TYP B_06.dwg
DESIGNED BY:	
DRAWN BY:	
CHECKED BY:	
DATE:	6/29/12
PROJECT NO.	160528003.4.100

BOTTINEAU CORRIDOR
DRAFT EIS
CONCEPTUAL DESIGN

LRT ALIGNMENT B
SHEET 18 OF 24

TYPICAL SECTION B-06

SHEET NUMBER
39 OF 122

P:\Projects\C4147.02 – Bottineau DEIS\C3D\BOTT–TYP B_06.dwg August 24, 2012 – 9:22am

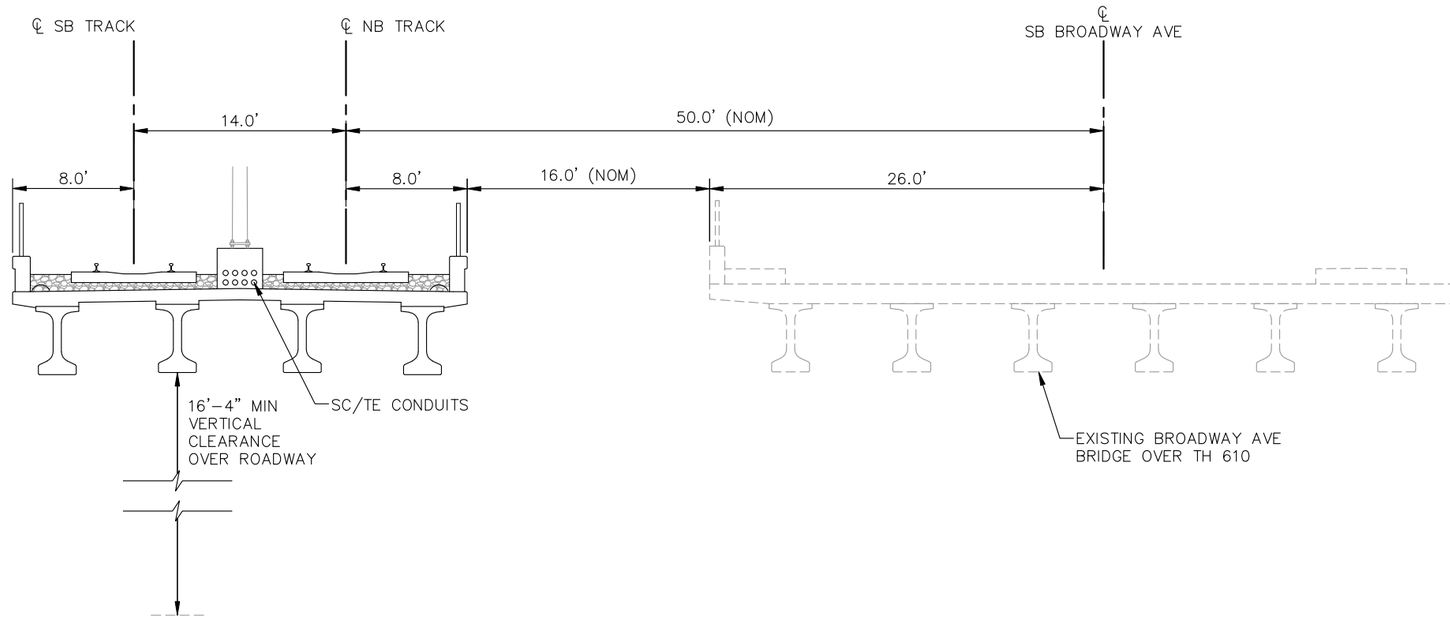

TYPICAL SECTION 06A
ALIGNMENT B - TH610 BRIDGE

NOTE: STATIONING REPRESENTS THE SB LRT TRACK

BottineauTransitway
DRAFT ENVIRONMENTAL IMPACT STATEMENT

Hennepin

CONSULTANTS:

Kimley-Horn and Associates, Inc.
2550 UNIVERSITY AVE. WEST, SUITE 345N
ST. PAUL, MINNESOTA 55114
TEL. NO. (651) 645-4197
FAX. NO. (651) 645-5116

SRF Consulting Group, Inc.

LTK Engineering Services

DRAWING NAME	BOTT-TYP B_06A.dwg
DESIGNED BY:	
DRAWN BY:	
CHECKED BY:	
DATE:	6/29/12
PROJECT NO.	160528003.4.100

BOTTINEAU CORRIDOR
DRAFT EIS
CONCEPTUAL DESIGN

LRT ALIGNMENT B
SHEET 19 OF 24

TYPICAL SECTION B-06A

SHEET NUMBER
40 OF 122

P:\Projects\C4147.02 - Bottineau DEIS\C3D\BOTT-TYP B_06A.dwg August 24, 2012 - 9:22am

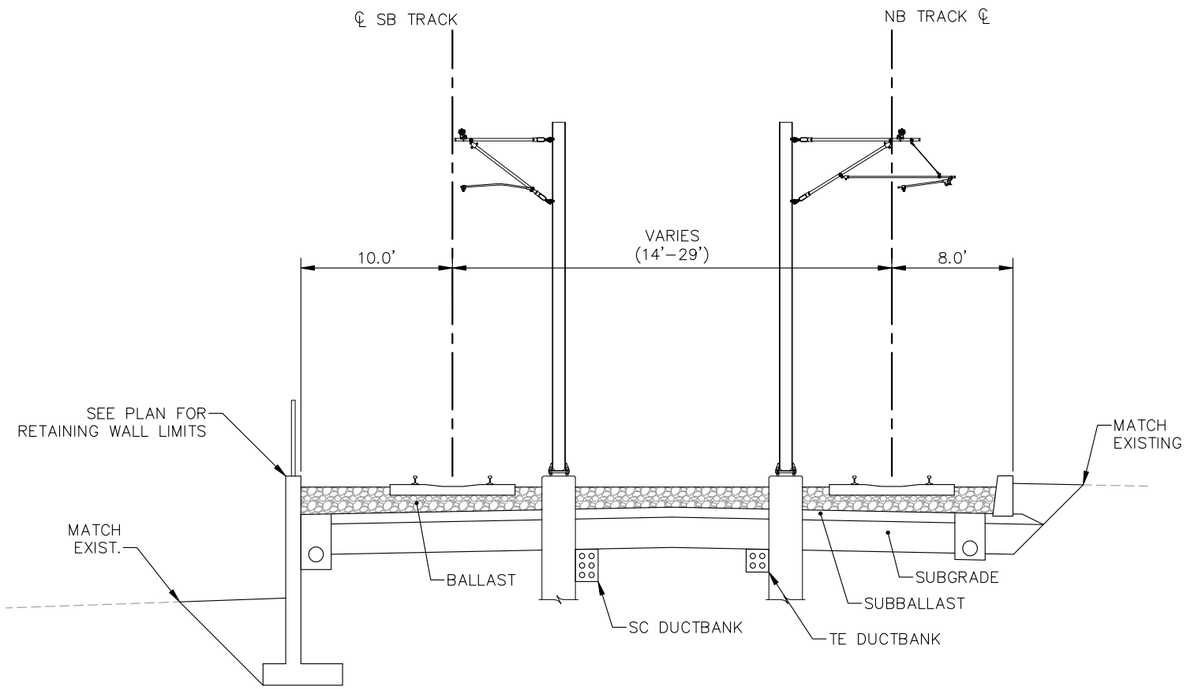

TYPICAL SECTION B-07
ALIGNMENT B - STA. 5193+00 TO 5198+67

NOTE: STATIONING REPRESENTS THE SB LRT TRACK

P:\Projects\C4147.02 – Bottineau DEIS\C3D\BOTT–TYP B_07.dwg August 24, 2012 – 9:23am

Bottineau Transitway
DRAFT ENVIRONMENTAL IMPACT STATEMENT

Hennepin

CONSULTANTS:

Kimley-Horn and Associates, Inc.
2550 UNIVERSITY AVE. WEST, SUITE 345N
ST. PAUL, MINNESOTA 55114
TEL. NO. (651) 645–4197
FAX. NO. (651) 645–5116

SRF Consulting Group, Inc.

LTK Engineering Services

DRAWING NAME	BOTT–TYP B_07.dwg
DESIGNED BY:	
DRAWN BY:	
CHECKED BY:	
DATE:	6/29/12
PROJECT NO.	160528003.4.100

BOTTINEAU CORRIDOR
DRAFT EIS
CONCEPTUAL DESIGN

LRT ALIGNMENT B
SHEET 20 OF 24

TYPICAL SECTION B-07

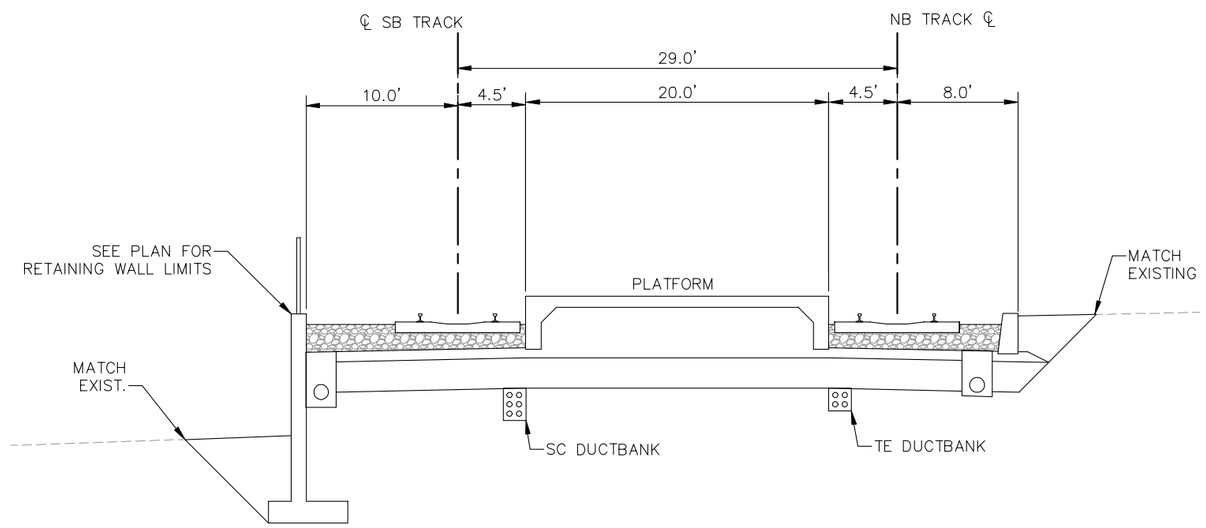

TYPICAL SECTION B-07A
ALIGNMENT B - OAK GROVE PARKWAY STATION

NOTE: STATIONING REPRESENTS THE SB LRT TRACK

P:\Projects\C4147.02 - Bottineau DEIS\C3D\BOTT-TYP B_07A.dwg August 24, 2012 - 9:23am

BottineauTransitway
DRAFT ENVIRONMENTAL IMPACT STATEMENT

Hennepin

CONSULTANTS:

Kimley-Horn and Associates, Inc.
2550 UNIVERSITY AVE. WEST, SUITE 345N
ST. PAUL, MINNESOTA 55114
TEL. NO. (651) 645-4197
FAX. NO. (651) 645-5116

SRF Consulting Group, Inc.

LTK Engineering Services

DRAWING NAME	BOTT-TYP B_07A.dwg
DESIGNED BY:	
DRAWN BY:	
CHECKED BY:	
DATE:	6/29/12
PROJECT NO.	160528003.4.100

BOTTINEAU CORRIDOR
DRAFT EIS
CONCEPTUAL DESIGN

LRT ALIGNMENT B
SHEET 21 OF 24

TYPICAL SECTION B-07A

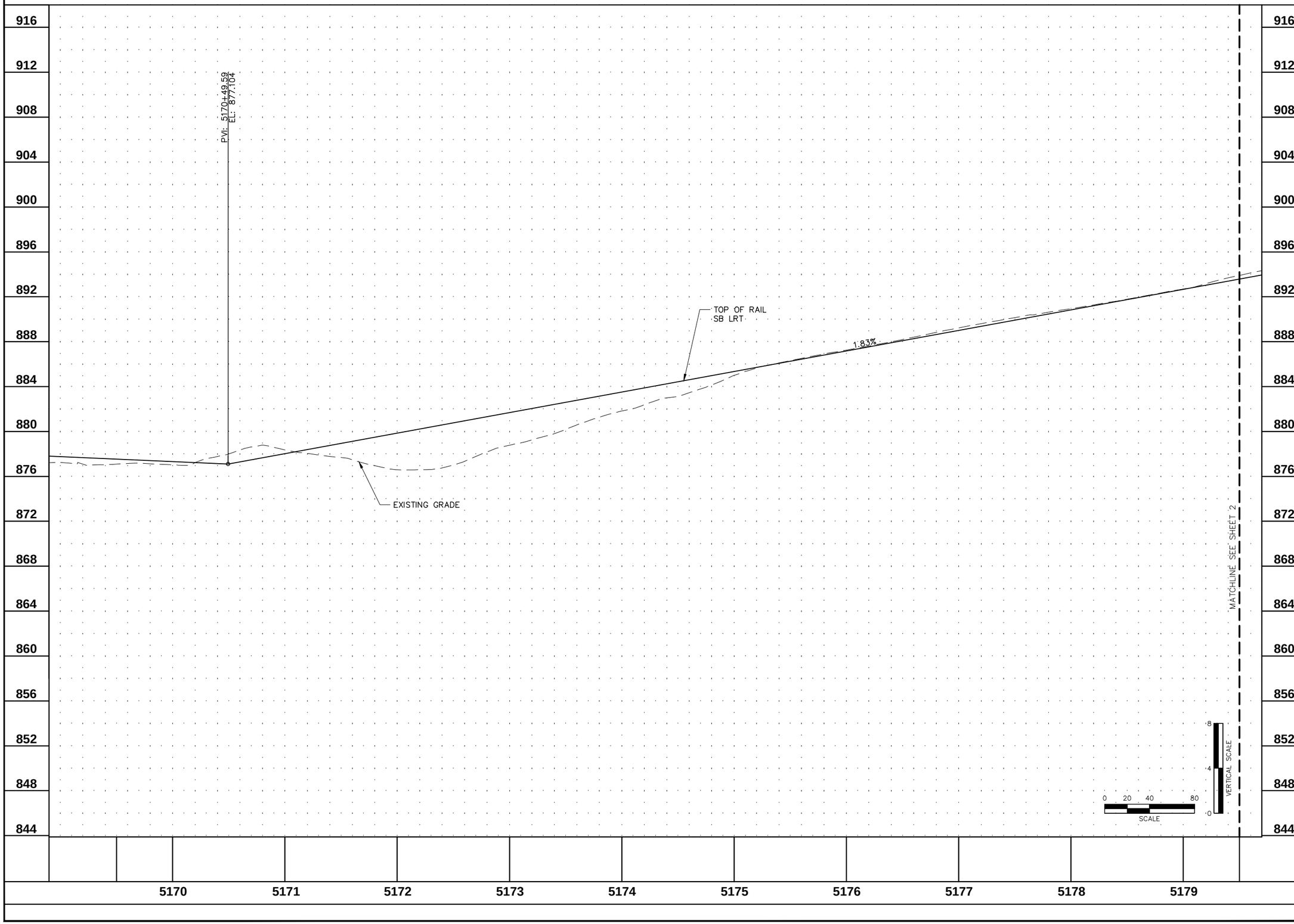

K:\TWC_Transit\HCRRA\BOTTINEAU_DEIS\CADD\PLAN_SHEETS\Profile\BOTT-PRF-B-01.dwg September 06, 2012 - 2:17pm

BottineauTransitway
DRAFT ENVIRONMENTAL IMPACT STATEMENT

Hennepin

CONSULTANTS:

Kimley-Horn and Associates, Inc.
2550 UNIVERSITY AVE. WEST, SUITE 345N
ST. PAUL, MINNESOTA 55114
TEL. NO. (651) 645-4197
FAX. NO. (651) 645-5116

SRF Consulting Group, Inc.

LTK Engineering Services

DRAWING NAME	BOTT-PRF-B-01.dwg
DESIGNED BY:	
DRAWN BY:	
CHECKED BY:	
DATE:	9/5/2012
PROJECT NO.	160528003.4.100

BOTTINEAU CORRIDOR
DRAFT EIS
CONCEPTUAL DESIGN

ALIGNMENT B
CRITICAL PROFILE
W. BROADWAY OVER TH 610
SHEET 22 OF 24

CRITICAL PROFILE

SHEET NUMBER
43 OF 122

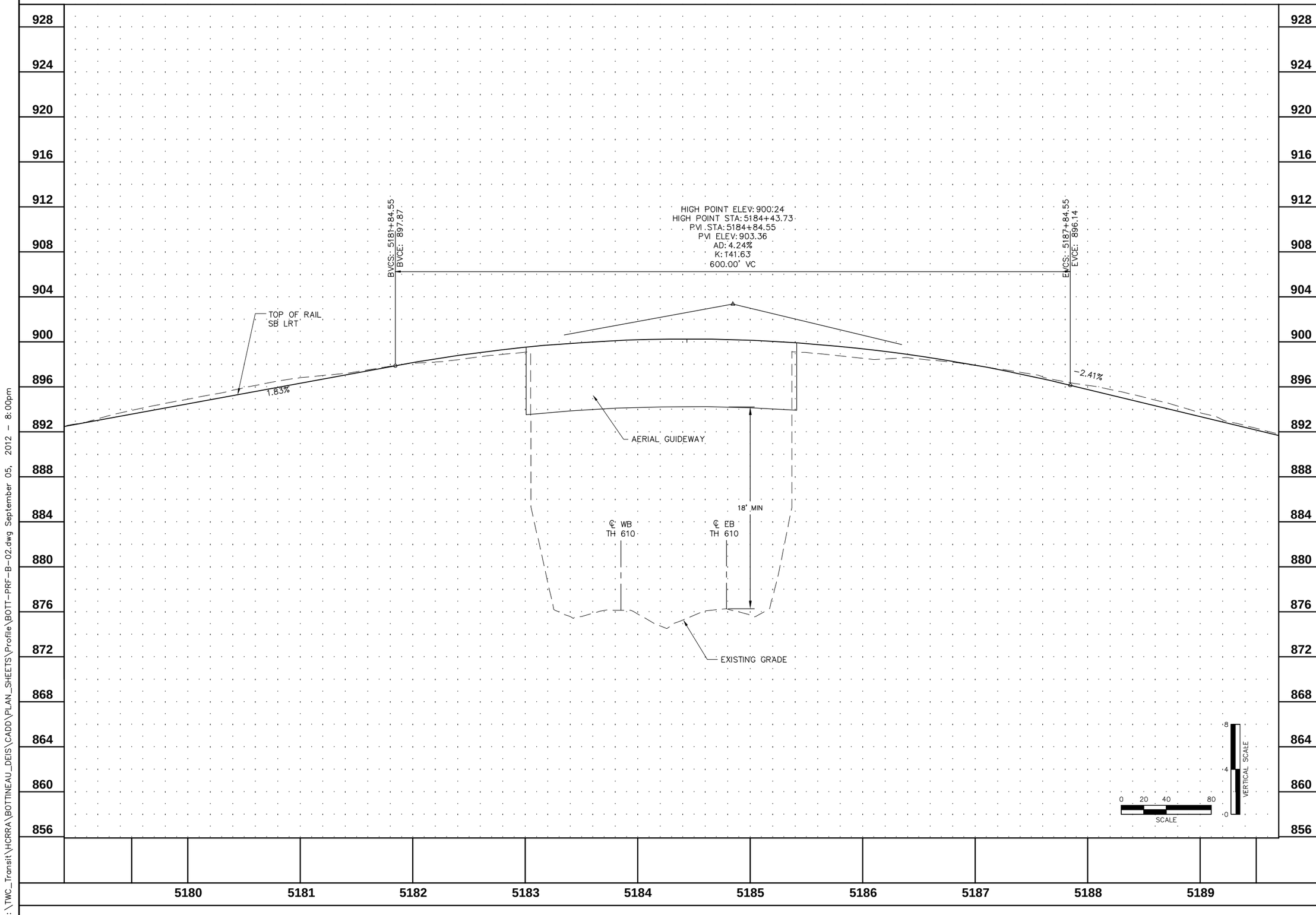

K:\TWC_Transit\HCRRA\BOTTINEAU_DEIS\CADD\PLAN_SHEETS\Profile\BOTT-PRF-B-02.dwg September 05, 2012 - 8:00pm

Bottineau Transitway
DRAFT ENVIRONMENTAL IMPACT STATEMENT

Hennepin

CONSULTANTS:

Kimley-Horn and Associates, Inc.
2550 UNIVERSITY AVE. WEST, SUITE 345N
ST. PAUL, MINNESOTA 55114
TEL. NO. (651) 645-4197
FAX. NO. (651) 645-5116

SRF Consulting Group, Inc.

LTK Engineering Services

DRAWING NAME	BOTT-PRF-B-02.dwg
DESIGNED BY:	
DRAWN BY:	
CHECKED BY:	
DATE:	9/5/2012
PROJECT NO.	160528003.4.100

BOTTINEAU CORRIDOR
DRAFT EIS
CONCEPTUAL DESIGN

ALIGNMENT B
CRITICAL PROFILE
W. BROADWAY OVER TH 610
SHEET 23 OF 24

CRITICAL PROFILE

SHEET NUMBER
44 OF 122

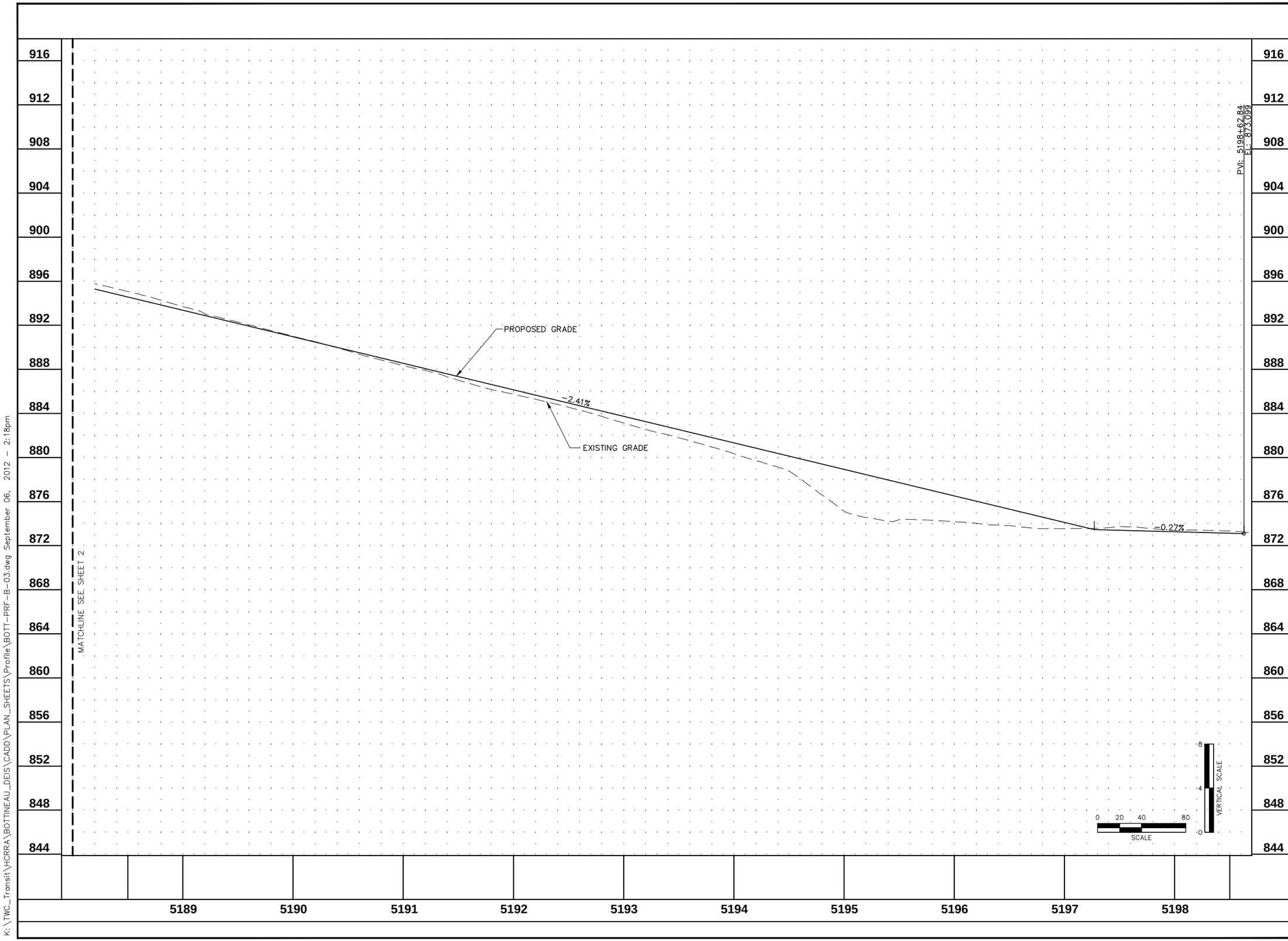

K:\TWC_Transit\HCRRA\BOTTINEAU_DEIS\CADD\PLAN_SHEETS\Profile\BOTT-PRF-B-03.dwg September 06, 2012 - 2:18pm

BottineauTransitway
DRAFT ENVIRONMENTAL IMPACT STATEMENT

Hennepin

CONSULTANTS:

Kimley-Horn and Associates, Inc.
2550 UNIVERSITY AVE. WEST, SUITE 345N
ST. PAUL, MINNESOTA 55114
TEL. NO. (651) 645-4197
FAX. NO. (651) 645-5116

SRF Consulting Group, Inc.

LTK Engineering Services

DRAWING NAME	BOTT-PRF-B-03.dwg
DESIGNED BY:	
DRAWN BY:	
CHECKED BY:	
DATE:	9/5/2012
PROJECT NO.	160528003.4.100

BOTTINEAU CORRIDOR
DRAFT EIS
CONCEPTUAL DESIGN

ALIGNMENT B
CRITICAL PROFILE
W. BROADWAY OVER TH 610
SHEET 24 OF 24

CRITICAL PROFILE

SHEET NUMBER
45 OF 122

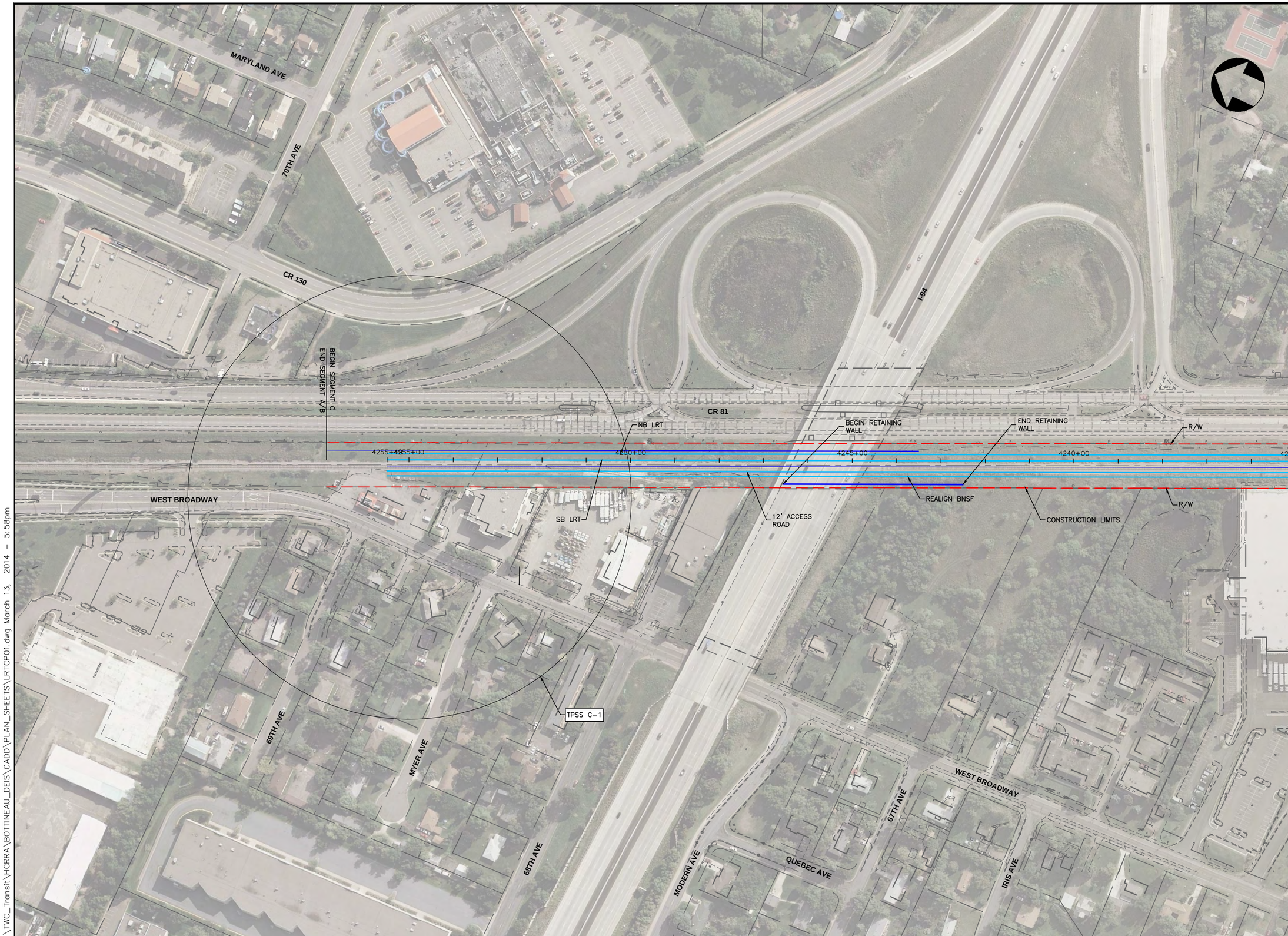

K:\TWC_Transit\HCRRA\BOTTINEAU_DEIS\CADD\PLAN_SHEETS\LRTCP01.dwg March 13, 2014 - 5:58pm

Bottineau Transitway
DRAFT ENVIRONMENTAL IMPACT STATEMENT

Hennepin

CONSULTANTS:

Kimley-Horn and Associates, Inc.
2550 UNIVERSITY AVE. WEST, SUITE 345N
ST. PAUL, MINNESOTA 55114
TEL. NO. (651) 645-4197
FAX. NO. (651) 645-5116

SRF Consulting Group, Inc.

LTK Engineering Services

DRAWING NAME	LRTCP01.dwg
DESIGNED BY:	
DRAWN BY:	
CHECKED BY:	
DATE:	3/13/2014
PROJECT NO.	160528003.4.100

SCALE
0 100' 200'

BOTTINEAU TRANSITWAY
DRAFT EIS
CONCEPTUAL DESIGN

LRT ALIGNMENT C
SHEET 1 OF 30

ALIGNMENT PLAN
STA 4235+00 - 4256+65

SHEET NUMBER
46 OF 122

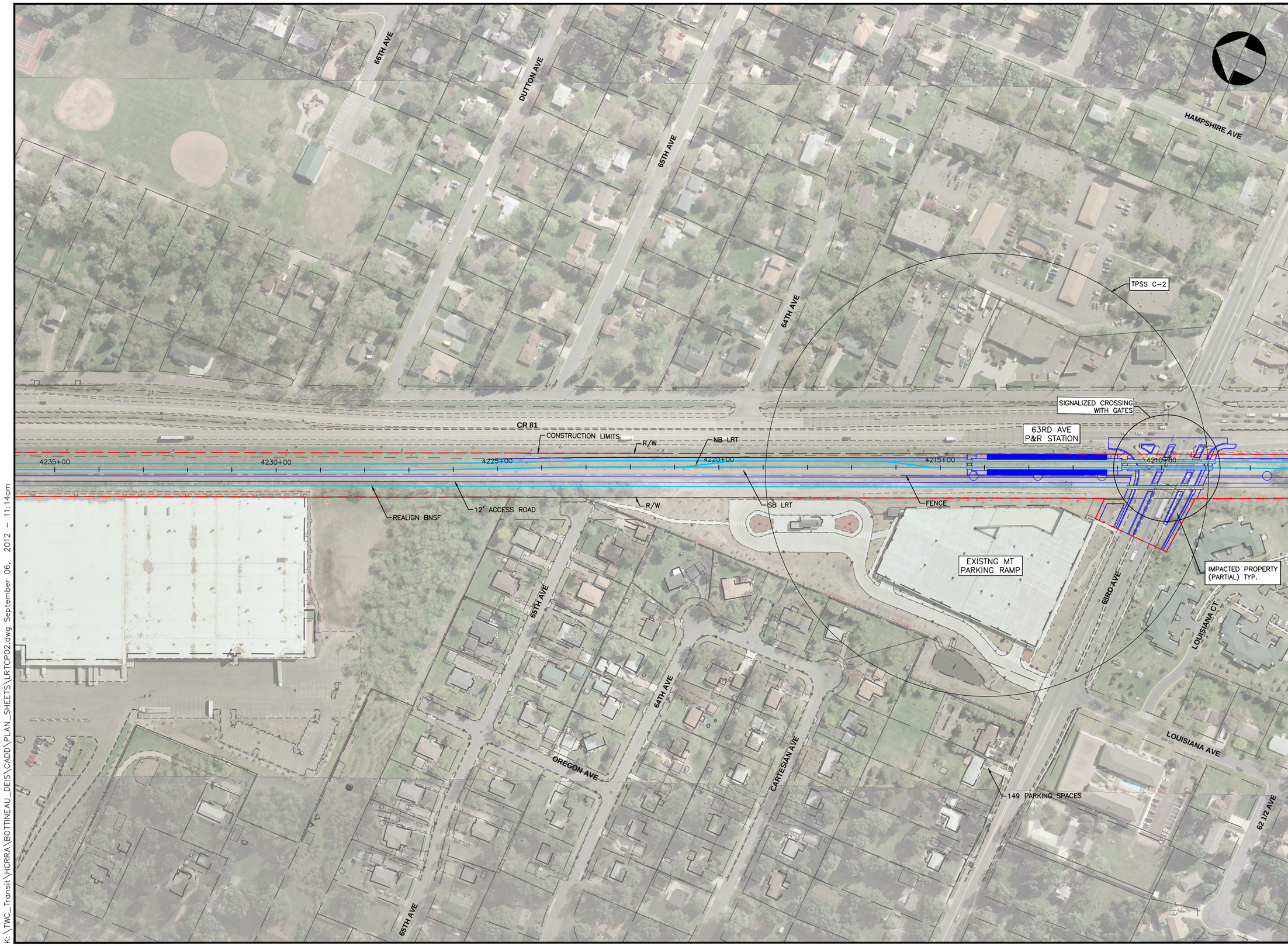

K:\TWC_Transit\HCRRA\BOTTINEAU_DEIS\CADD\PLAN_SHEETS\LRTCP02.dwg September 06, 2012 - 11:14am

BottineauTransitway
DRAFT ENVIRONMENTAL IMPACT STATEMENT

Hennepin

CONSULTANTS:

Kimley-Horn and Associates, Inc.
2550 UNIVERSITY AVE. WEST, SUITE 345N
ST. PAUL, MINNESOTA 55114
TEL. NO. (651) 645-4197
FAX. NO. (651) 645-5116

SRF Consulting Group, Inc.

LTK Engineering Services

DRAWING NAME	LRTCP02.dwg
DESIGNED BY:	
DRAWN BY:	
CHECKED BY:	
DATE:	9/5/2012
PROJECT NO.	160528003.4.100

SCALE
0 100' 200'

BOTTINEAU TRANSITWAY
DRAFT EIS
CONCEPTUAL DESIGN

LRT ALIGNMENT C
SHEET 2 OF 30

ALIGNMENT PLAN
STA 4207+00 - 4235+00

SHEET NUMBER
47 OF 122

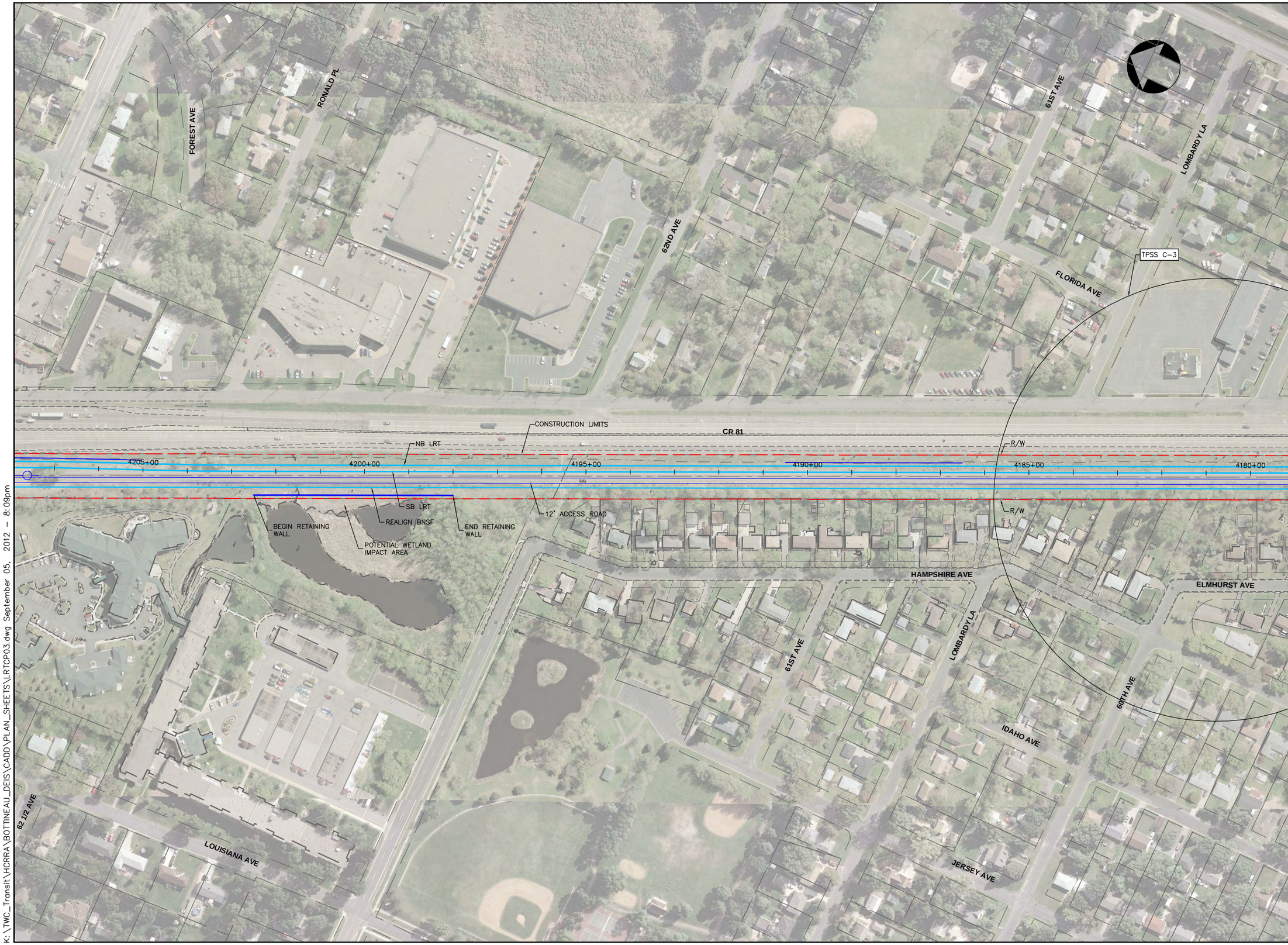

K:\TWC_Transit\HCRRA\BOTTINEAU_DEIS\CADD\PLAN_SHEETS\LRTCP03.dwg September 05, 2012 - 8:09pm

Bottineau Transitway
DRAFT ENVIRONMENTAL IMPACT STATEMENT

Hennepin

CONSULTANTS:

Kimley-Horn and Associates, Inc.
2550 UNIVERSITY AVE. WEST, SUITE 345N
ST. PAUL, MINNESOTA 55114
TEL. NO. (651) 645-4197
FAX. NO. (651) 645-5116

SRF Consulting Group, Inc.

LTK Engineering Services

DRAWING NAME	LRTCP03.dwg
DESIGNED BY:	
DRAWN BY:	
CHECKED BY:	
DATE:	9/5/2012
PROJECT NO.	160528003.4.100

SCALE
0 100' 200'

BOTTINEAU TRANSITWAY
DRAFT EIS
CONCEPTUAL DESIGN

LRT ALIGNMENT C
SHEET 3 OF 30

ALIGNMENT PLAN
STA 4179+00 - 4207+00

SHEET NUMBER
48 OF 122

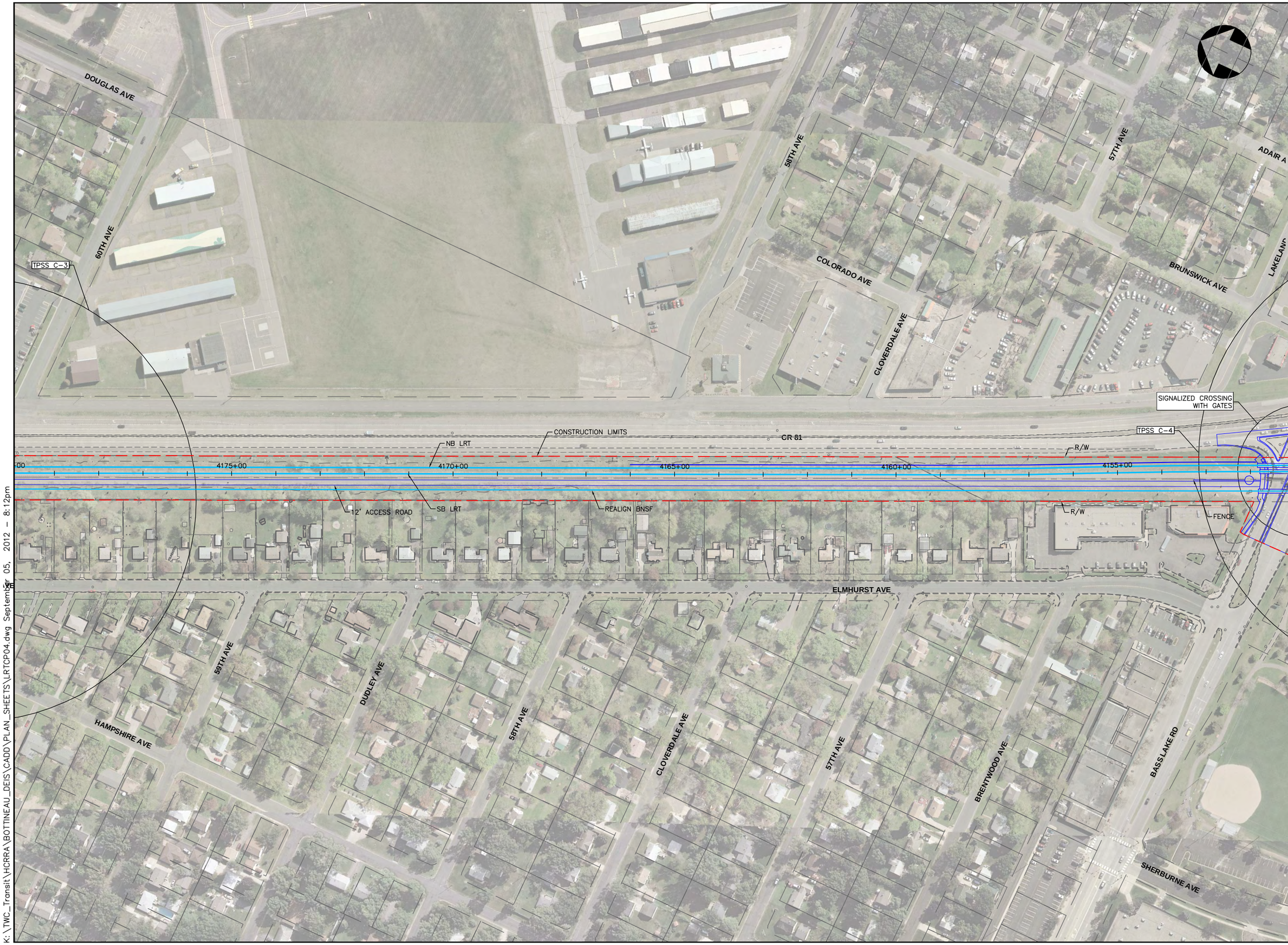

K:\TWC_Transit\HCRRA\BOTTINEAU_DEIS\CADD\PLAN_SHEETS\LRTCP04.dwg September 05, 2012 - 8:12pm

Bottineau Transitway
DRAFT ENVIRONMENTAL IMPACT STATEMENT

Hennepin

CONSULTANTS:

Kimley-Horn and Associates, Inc.
2550 UNIVERSITY AVE. WEST, SUITE 345N
ST. PAUL, MINNESOTA 55114
TEL. NO. (651) 645-4197
FAX. NO. (651) 645-5116

SRF Consulting Group, Inc.

LTK Engineering Services

DRAWING NAME	LRTCP04.dwg
DESIGNED BY:	
DRAWN BY:	
CHECKED BY:	
DATE:	9/5/2012
PROJECT NO.	160528003.4.100

SCALE
0 100' 200'

BOTTINEAU TRANSITWAY
DRAFT EIS
CONCEPTUAL DESIGN

LRT ALIGNMENT C
SHEET 4 OF 30

ALIGNMENT PLAN
STA 4151+00 - 4179+00

SHEET NUMBER
49 OF 122

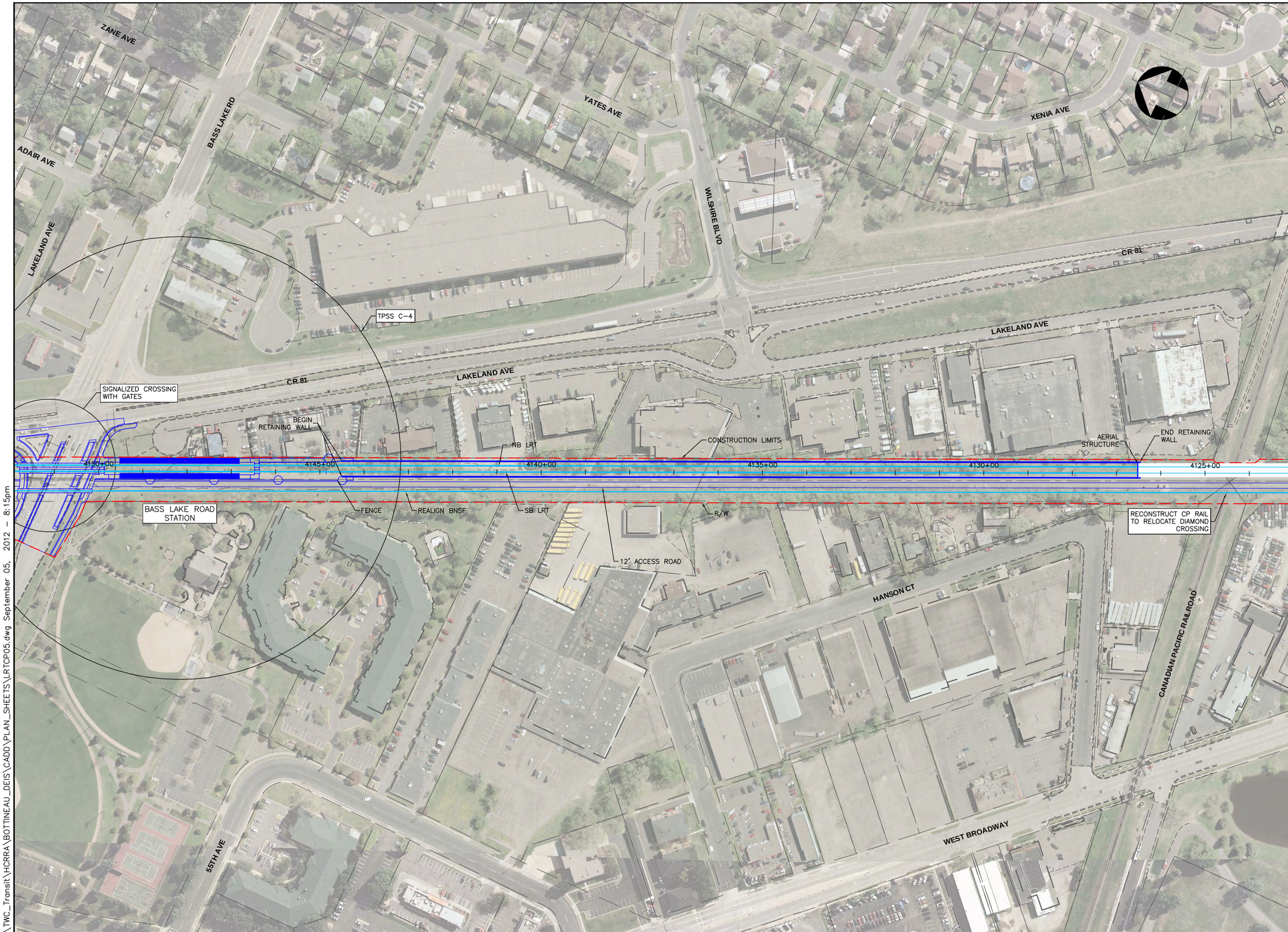

K:\TWC_Transit\HCRRA\BOTTINEAU_DEIS\CADD\PLAN_SHEETS\LRTCP05.dwg September 05, 2012 - 8:15pm

BottineauTransitway
DRAFT ENVIRONMENTAL IMPACT STATEMENT

Hennepin

CONSULTANTS:

Kimley-Horn and Associates, Inc.
2550 UNIVERSITY AVE. WEST, SUITE 345N
ST. PAUL, MINNESOTA 55114
TEL. NO. (651) 645-4197
FAX. NO. (651) 645-5116

SRF Consulting Group, Inc.

LTK Engineering Services

DRAWING NAME	LRTCP05.dwg
DESIGNED BY:	
DRAWN BY:	
CHECKED BY:	
DATE:	9/5/2012
PROJECT NO.	160528003.4.100

SCALE
0 100' 200'

BOTTINEAU TRANSITWAY
DRAFT EIS
CONCEPTUAL DESIGN

LRT ALIGNMENT C
SHEET 5 OF 30

ALIGNMENT PLAN
STA 4123+00 - 4151+00

SHEET NUMBER
50 OF 122

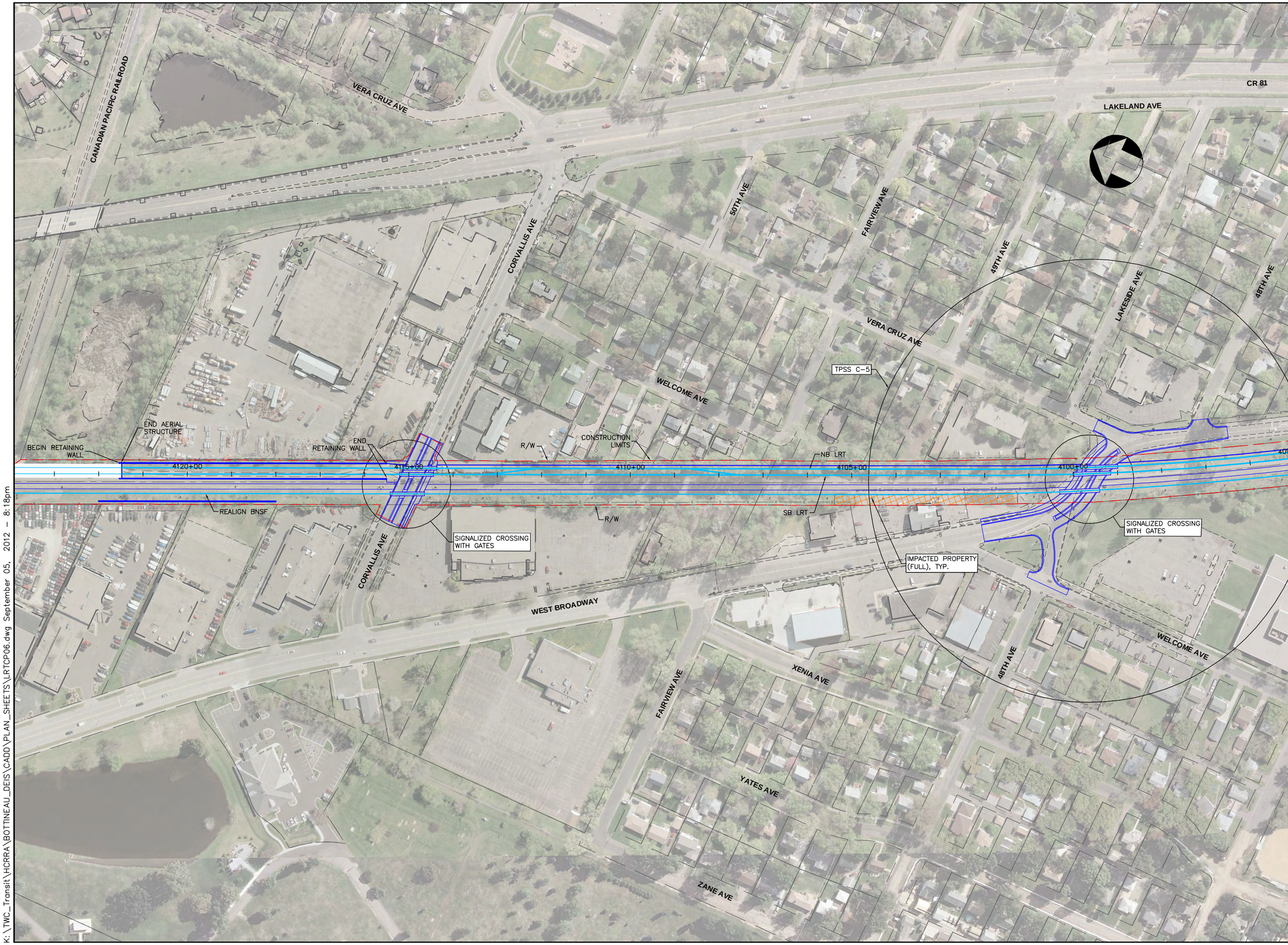

K:\TWC_Transit\HCRRA\BOTTINEAU_DEIS\CADD\PLAN_SHEETS\LRTCP06.dwg September 05, 2012 - 8:18pm

Bottineau Transitway
DRAFT ENVIRONMENTAL IMPACT STATEMENT

Hennepin

CONSULTANTS:

Kimley-Horn and Associates, Inc.
2550 UNIVERSITY AVE. WEST, SUITE 345N
ST. PAUL, MINNESOTA 55114
TEL. NO. (651) 645-4197
FAX. NO. (651) 645-5116

SRF Consulting Group, Inc.

LTK Engineering Services

DRAWING NAME	LRTCP06.dwg
DESIGNED BY:	
DRAWN BY:	
CHECKED BY:	
DATE:	9/5/2012
PROJECT NO.	160528003.4.100

SCALE
0 100' 200'

BOTTINEAU TRANSITWAY
DRAFT EIS
CONCEPTUAL DESIGN

LRT ALIGNMENT C
SHEET 6 OF 30

ALIGNMENT PLAN
STA 4095+00 - 4123+00

SHEET NUMBER
51 OF 122

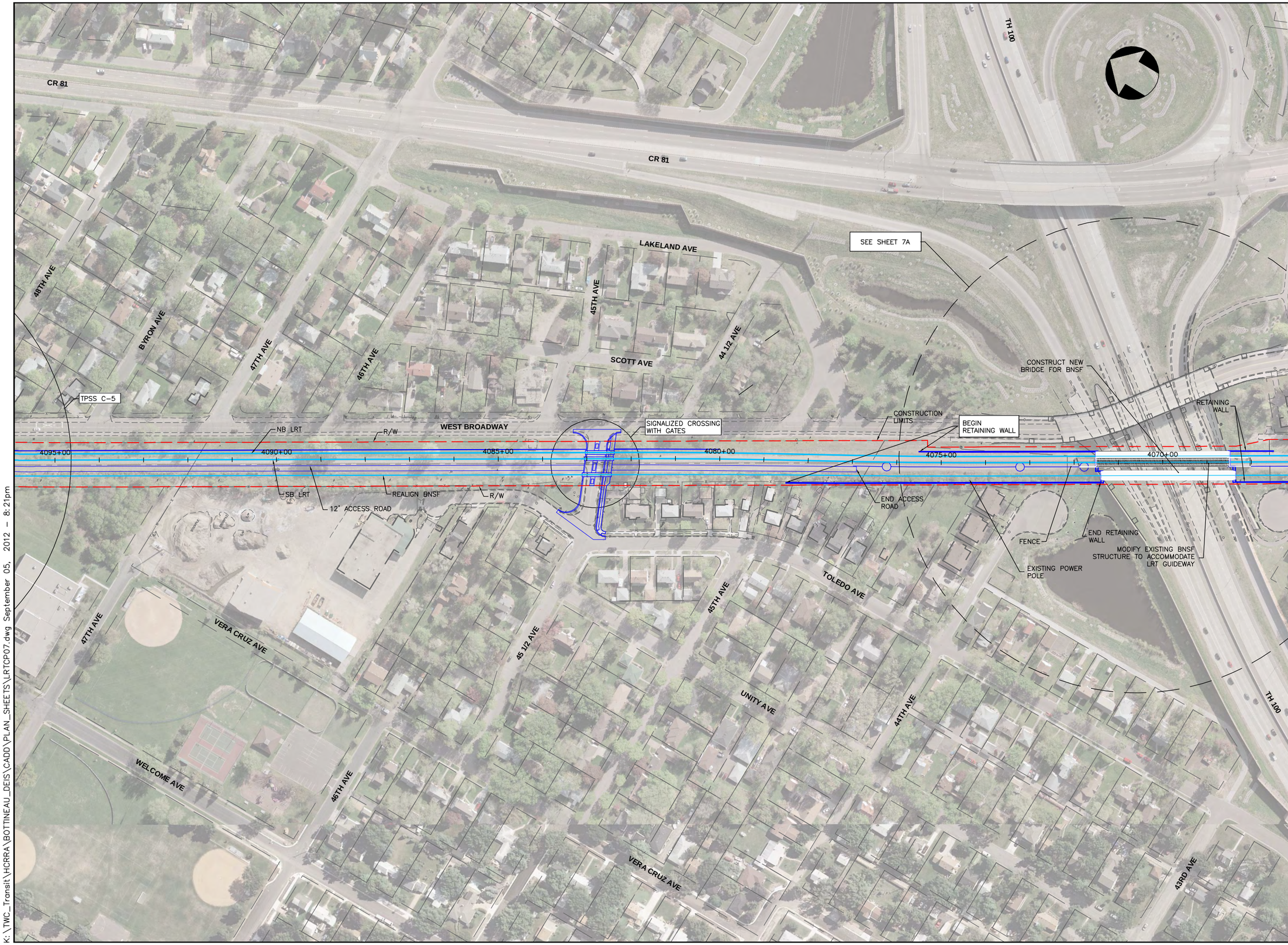

K:\TWC_Transit\HCRRA\BOTTINEAU_DEIS\CADD\PLAN_SHEETS\LRTCP07.dwg September 05, 2012 - 8:21pm

Bottineau Transitway
DRAFT ENVIRONMENTAL IMPACT STATEMENT

Hennepin

CONSULTANTS:

Kimley-Horn and Associates, Inc.
2550 UNIVERSITY AVE. WEST, SUITE 345N
ST. PAUL, MINNESOTA 55114
TEL. NO. (651) 645-4197
FAX. NO. (651) 645-5116

SRF Consulting Group, Inc.

LTK Engineering Services

DRAWING NAME	LRTCP07.dwg
DESIGNED BY:	
DRAWN BY:	
CHECKED BY:	
DATE:	9/5/2012
PROJECT NO.	160528003.4.100

SCALE
0 100' 200'

BOTTINEAU TRANSITWAY
DRAFT EIS
CONCEPTUAL DESIGN

LRT ALIGNMENT C
SHEET 7 OF 30

ALIGNMENT PLAN
STA 4067+00 - 4095+00

SHEET NUMBER
52 OF 122

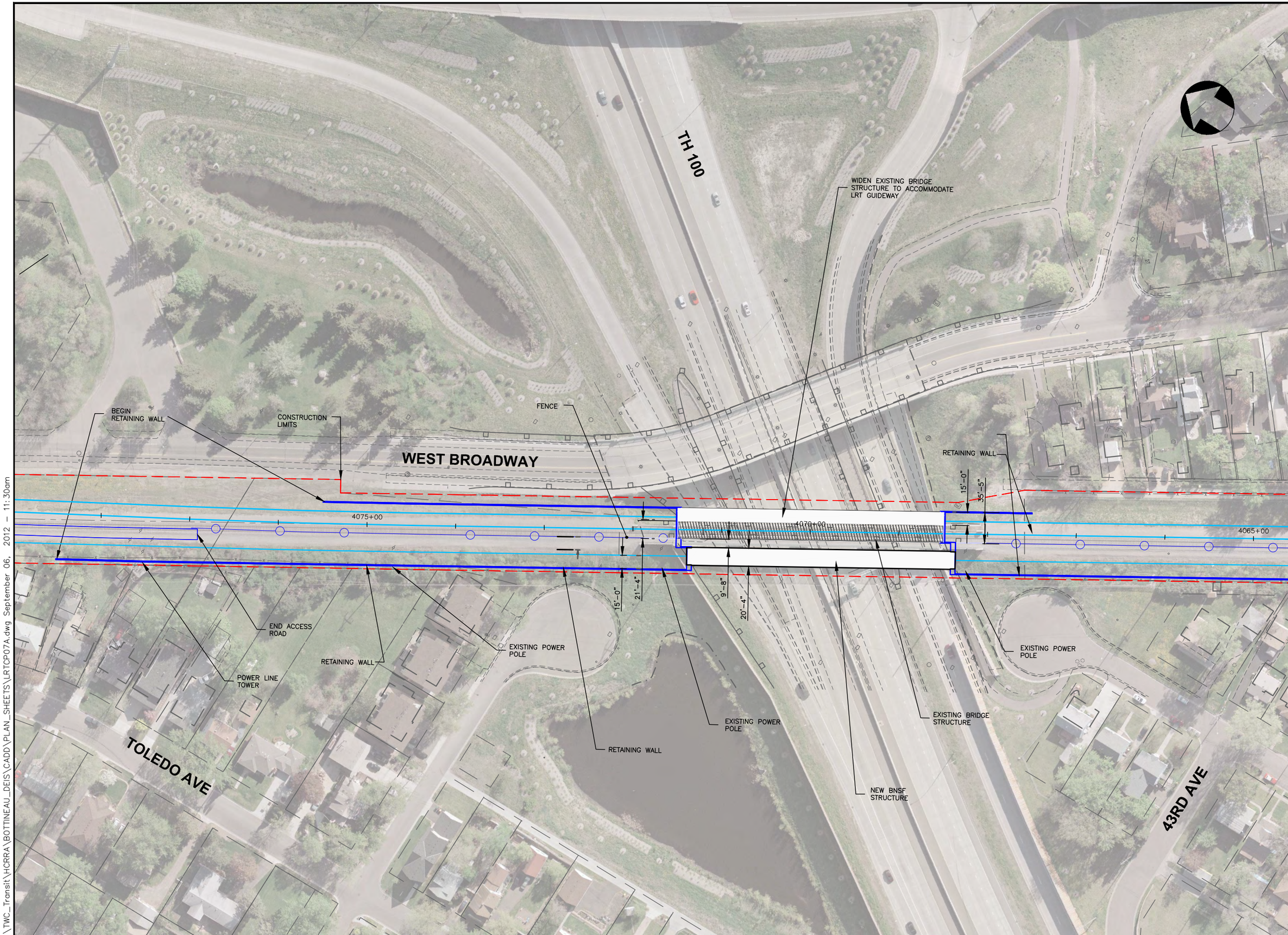

K:\TWC_Transit\HCRRA\BOTTINEAU_DEIS\CADD\PLAN_SHEETS\LRTCP07A.dwg September 06, 2012 - 11:30am

Bottineau Transitway
DRAFT ENVIRONMENTAL IMPACT STATEMENT

Hennepin

CONSULTANTS:

Kimley-Horn and Associates, Inc.
2550 UNIVERSITY AVE. WEST, SUITE 345N
ST. PAUL, MINNESOTA 55114
TEL. NO. (651) 645-4197
FAX. NO. (651) 645-5116

SRF Consulting Group, Inc.

LTK Engineering Services

DRAWING NAME	LRTCP07A.dwg
DESIGNED BY:	
DRAWN BY:	
CHECKED BY:	
DATE:	9/5/2012
PROJECT NO.	160528003.4.100

SCALE
0 50' 100'

BOTTINEAU TRANSITWAY
DRAFT EIS
CONCEPTUAL DESIGN

LRT ALIGNMENT C
SHEET 7A OF 10

ALIGNMENT PLAN
STA 4067+00 - 4095+00

SHEET NUMBER
53 OF 122

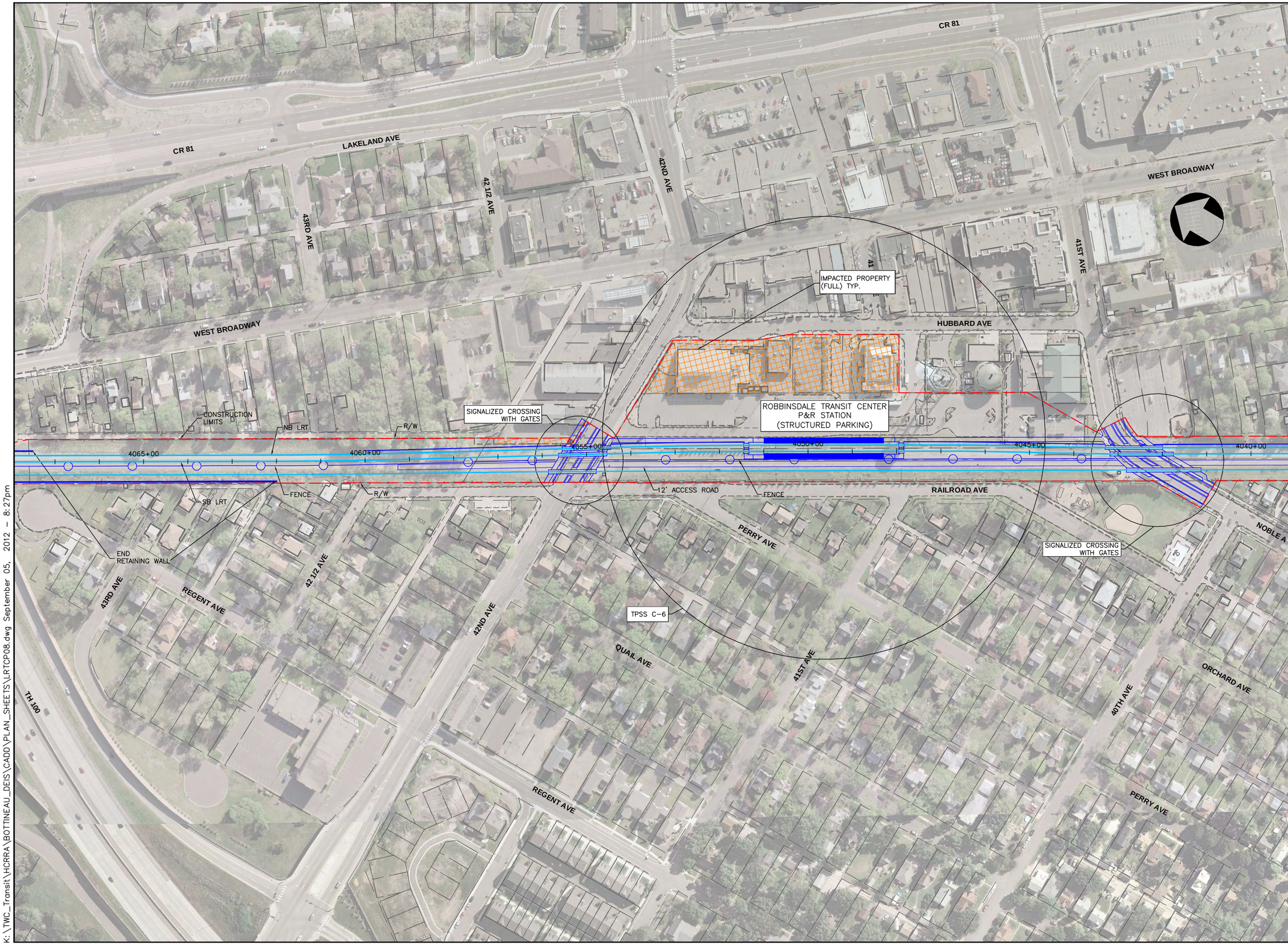

K:\TWC_Transit\HCRRA\BOTTINEAU_DEIS\CADD\PLAN_SHEETS\LRTCP08.dwg September 05, 2012 - 8:27pm

Bottineau Transitway
DRAFT ENVIRONMENTAL IMPACT STATEMENT

Hennepin

CONSULTANTS:

Kimley-Horn and Associates, Inc.
2550 UNIVERSITY AVE. WEST, SUITE 345N
ST. PAUL, MINNESOTA 55114
TEL. NO. (651) 645-4197
FAX. NO. (651) 645-5116

SRF Consulting Group, Inc.

LTK Engineering Services

DRAWING NAME	LRTCP08.dwg
DESIGNED BY:	
DRAWN BY:	
CHECKED BY:	
DATE:	9/5/2012
PROJECT NO.	160528003.4.100

SCALE
0 100' 200'

BOTTINEAU TRANSITWAY
DRAFT EIS
CONCEPTUAL DESIGN

LRT ALIGNMENT C
SHEET 9 OF 30

ALIGNMENT PLAN
STA 4039+00 - 4067+00

SHEET NUMBER
54 OF 122

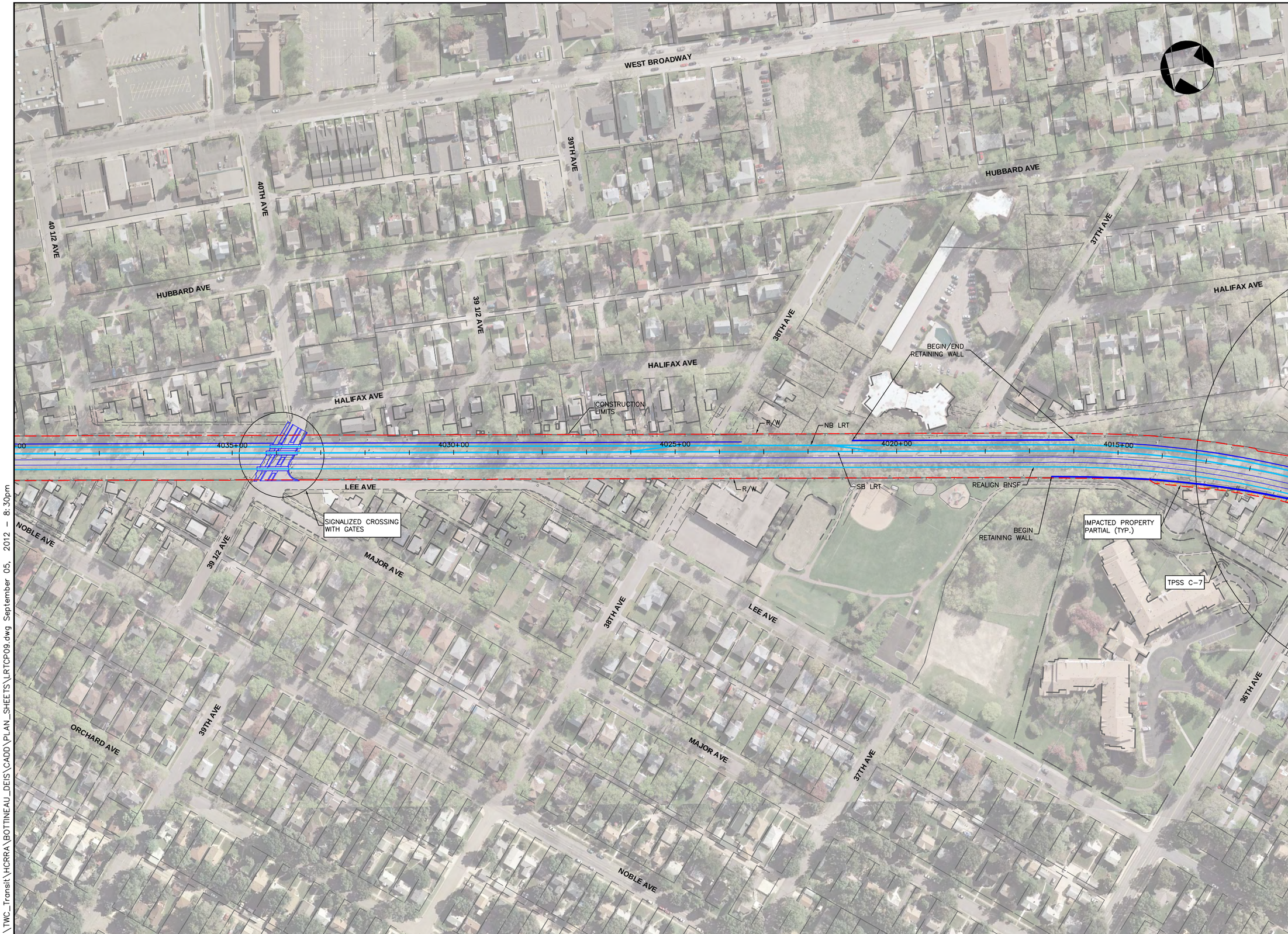

K:\TWC_Transit\HCRRA\BOTTINEAU_DEIS\CADD\PLAN_SHEETS\LRTCP09.dwg September 05, 2012 - 8:30pm

Bottineau Transitway
DRAFT ENVIRONMENTAL IMPACT STATEMENT

Hennepin

CONSULTANTS:

Kimley-Horn and Associates, Inc.
2550 UNIVERSITY AVE. WEST, SUITE 345N
ST. PAUL, MINNESOTA 55114
TEL. NO. (651) 645-4197
FAX NO. (651) 645-5116

SRF Consulting Group, Inc.

LTK Engineering Services

DRAWING NAME	LRTCP09.dwg
DESIGNED BY:	
DRAWN BY:	
CHECKED BY:	
DATE:	9/5/2012
PROJECT NO.	160528003.4.100

SCALE
0 100' 200'

BOTTINEAU TRANSITWAY
DRAFT EIS
CONCEPTUAL DESIGN

LRT ALIGNMENT C
SHEET 10 OF 30

ALIGNMENT PLAN
STA 4013+00 - 4039+00

SHEET NUMBER
55 OF 122

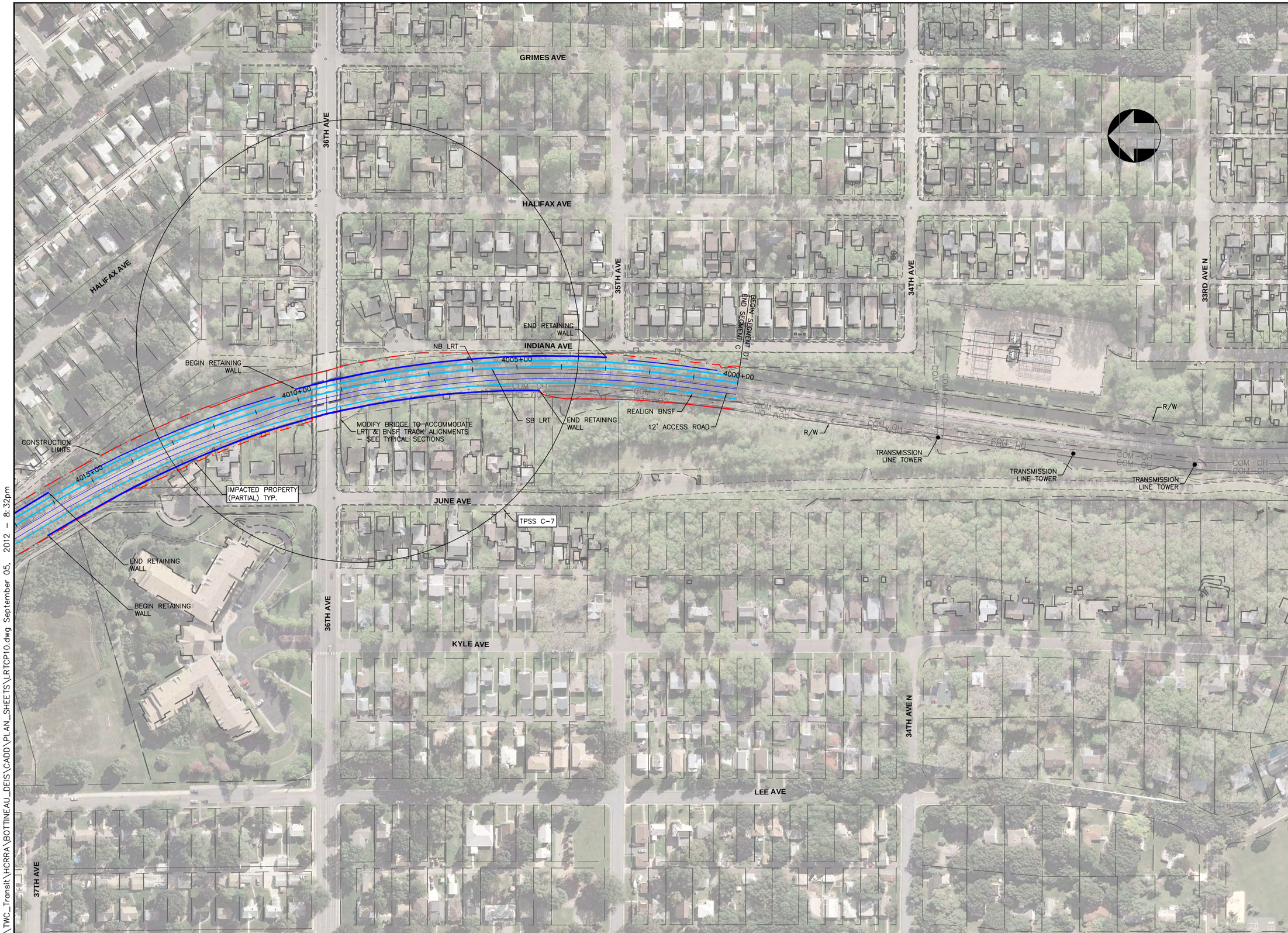

K:\TWC_Transit\HCRRA\BOTTINEAU_DEIS\CADD\PLAN_SHEETS\LRTCP10.dwg September 05, 2012 - 8:32pm

Bottineau Transitway
DRAFT ENVIRONMENTAL IMPACT STATEMENT

Hennepin

CONSULTANTS:

Kimley-Horn and Associates, Inc.
2550 UNIVERSITY AVE. WEST, SUITE 345N
ST. PAUL, MINNESOTA 55114
TEL. NO. (651) 645-4197
FAX. NO. (651) 645-5116

SRF Consulting Group, Inc.

LTK Engineering Services

DRAWING NAME	LRTCP10.dwg
DESIGNED BY:	
DRAWN BY:	
CHECKED BY:	
DATE:	9/5/2012
PROJECT NO.	160528003.4.100

SCALE
0 100' 200'

BOTTINEAU TRANSITWAY
DRAFT EIS
CONCEPTUAL DESIGN

LRT ALIGNMENT C
SHEET 11 OF 30

ALIGNMENT PLAN

STA 4000+00 - 4016+00

SHEET NUMBER
56 OF 122

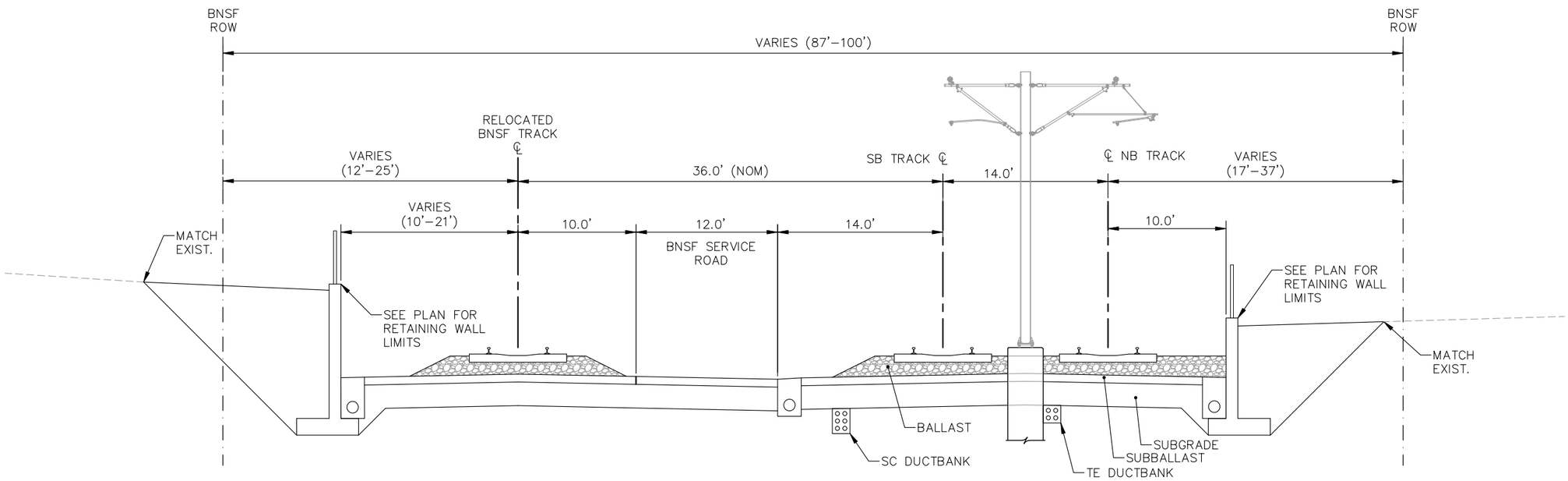

TYPICAL SECTION C-01
ALIGNMENT C - STA. 4000+00 TO STA. 4042+00

NOTE: STATIONING REPRESENTS THE SB LRT TRACK

BottineauTransitway
DRAFT ENVIRONMENTAL IMPACT STATEMENT

Hennepin

CONSULTANTS:

Kimley-Horn and Associates, Inc.
2550 UNIVERSITY AVE. WEST, SUITE 345N
ST. PAUL, MINNESOTA 55114
TEL. NO. (651) 645-4197
FAX. NO. (651) 645-5116

SRF Consulting Group, Inc.

LTK Engineering Services

DRAWING NAME	BOTT–TYP C_01.dwg
DESIGNED BY:	
DRAWN BY:	
CHECKED BY:	
DATE:	6/29/12
PROJECT NO.	160528003.4.100

BOTTINEAU CORRIDOR
DRAFT EIS
CONCEPTUAL DESIGN

LRT ALIGNMENT C
SHEET 12 OF 29

TYPICAL SECTION C-01

SHEET NUMBER
57 OF 122

P:\Projects\C4147.02 – Bottineau DEIS\C3D\BOTT–TYP C_01.dwg August 24, 2012 – 9:26am

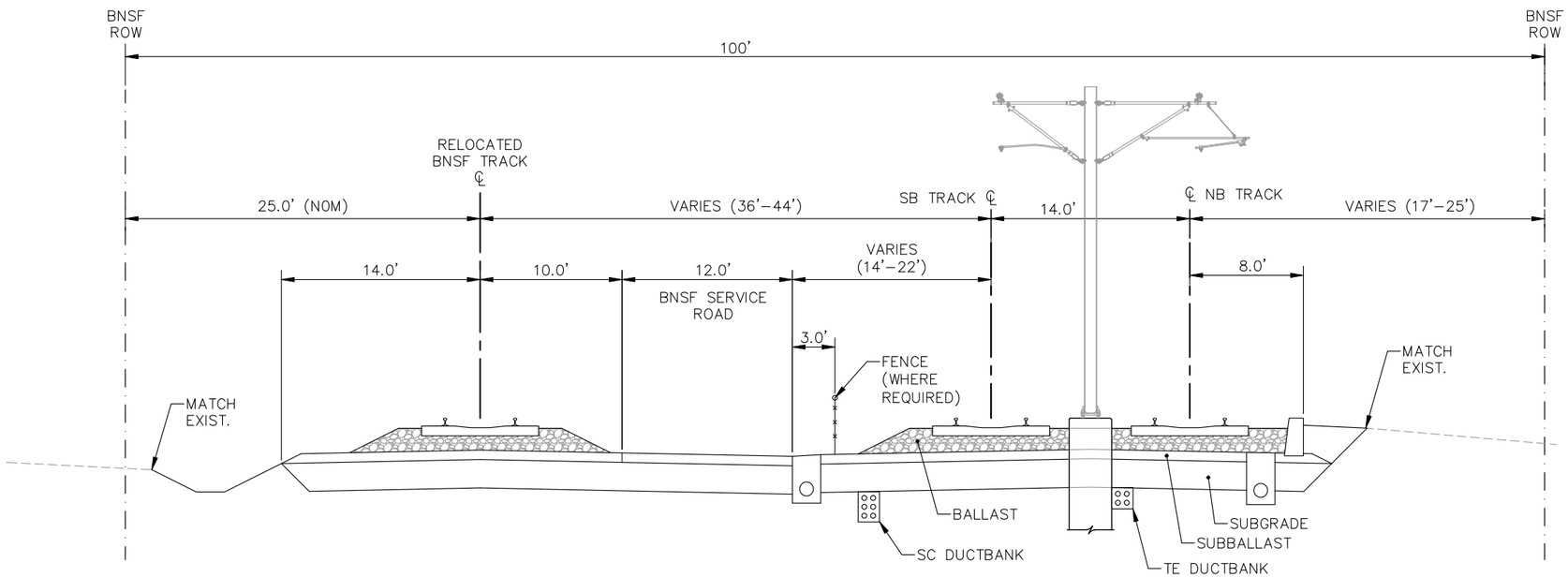

TYPICAL SECTION C-02
ALIGNMENT C - STA. 4042+00 TO STA. 4054+00

NOTE: STATIONING REPRESENTS THE SB LRT TRACK

BottineauTransitway
DRAFT ENVIRONMENTAL IMPACT STATEMENT

Hennepin

CONSULTANTS:

Kimley-Horn and Associates, Inc.
2550 UNIVERSITY AVE. WEST, SUITE 345N
ST. PAUL, MINNESOTA 55114
TEL. NO. (651) 645-4197
FAX. NO. (651) 645-5116

SRF Consulting Group, Inc.

LTK Engineering Services

DRAWING NAME	BOTT–TYP C_02.dwg
DESIGNED BY:	
DRAWN BY:	
CHECKED BY:	
DATE:	6/29/12
PROJECT NO.	160528003.4.100

BOTTINEAU CORRIDOR
DRAFT EIS
CONCEPTUAL DESIGN

LRT ALIGNMENT C
SHEET 13 OF 29

TYPICAL SECTION C-02

SHEET NUMBER
58 OF 122

P:\Projects\C4147.02 – Bottineau DEIS\C3D\BOTT–TYP C_02.dwg August 24, 2012 – 9:26am

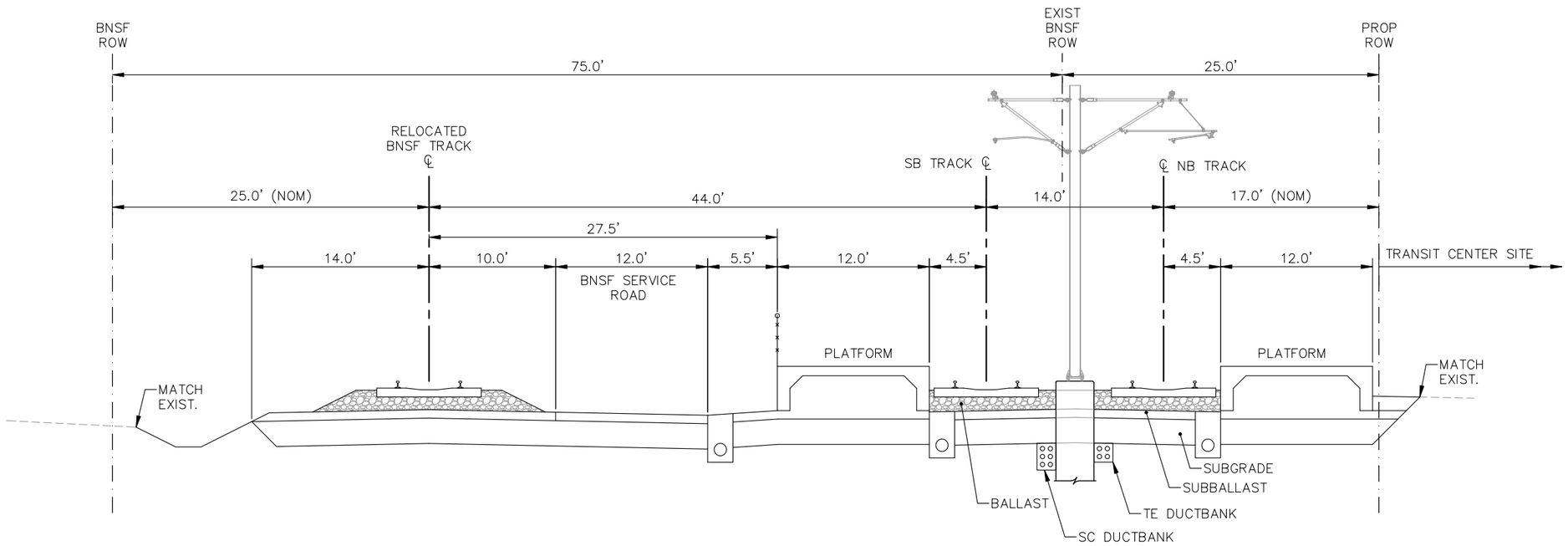

TYPICAL SECTION C-02A
ALIGNMENT C - ROBBINSDALE STATION

NOTE: STATIONING REPRESENTS THE SB LRT TRACK

Bottineau Transitway
DRAFT ENVIRONMENTAL IMPACT STATEMENT

Hennepin

CONSULTANTS:

Kimley-Horn and Associates, Inc.
2550 UNIVERSITY AVE. WEST, SUITE 345N
ST. PAUL, MINNESOTA 55114
TEL. NO. (651) 645-4197
FAX. NO. (651) 645-5116

SRF Consulting Group, Inc.

LTK Engineering Services

DRAWING NAME	BOTT-TYP C_02A.dwg
DESIGNED BY:	
DRAWN BY:	
CHECKED BY:	
DATE:	6/29/12
PROJECT NO.	160528003.4.100

BOTTINEAU CORRIDOR
DRAFT EIS
CONCEPTUAL DESIGN

LRT ALIGNMENT C
SHEET 14 OF 29

TYPICAL SECTION C-02A

SHEET NUMBER
59 OF 122

P:\Projects\C4147.02 - Bottineau DEIS\C3D\BOTT-TYP C_02A.dwg August 24, 2012 - 9:26am

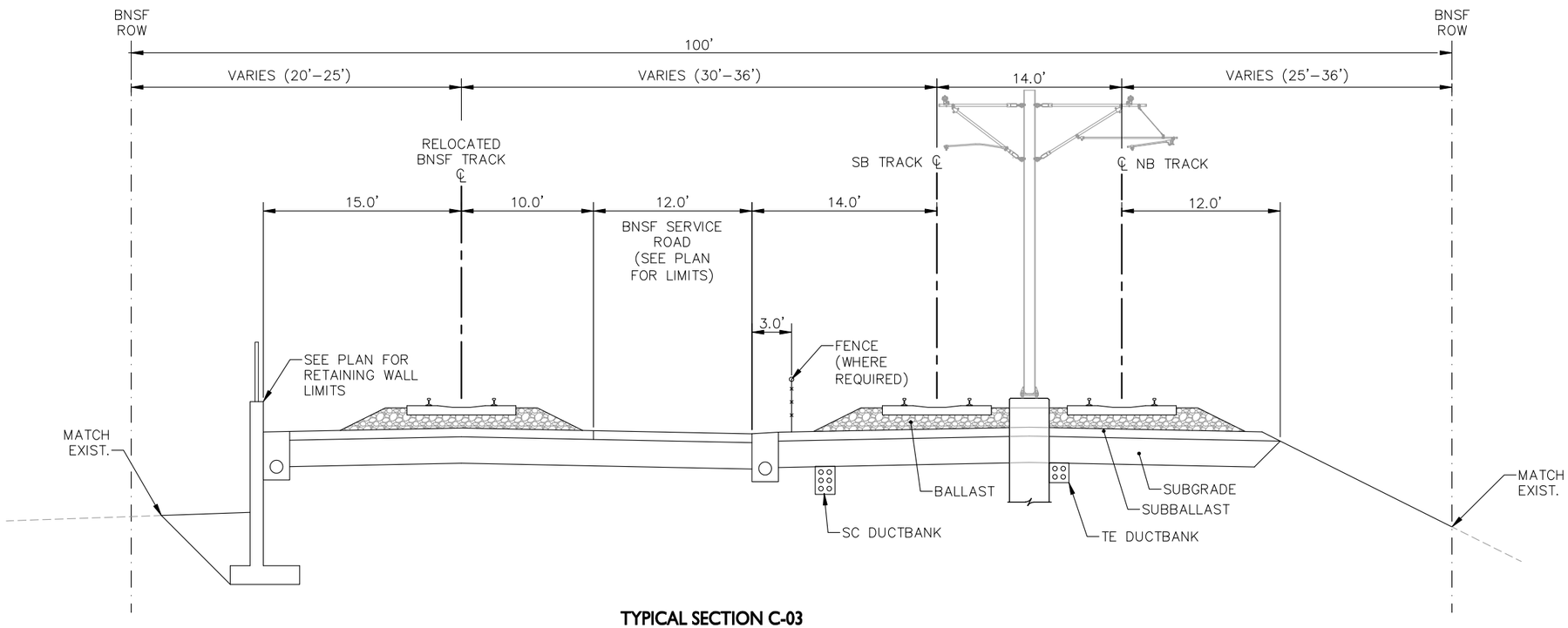

TYPICAL SECTION C-03
ALIGNMENT C - STA. 4054+00 TO STA. 4068+50

NOTE: STATIONING REPRESENTS THE SB LRT TRACK

P:\Projects\C4147.02 – Bottineau DEIS\C3D\BOTT–TYP C_03.dwg August 24, 2012 – 9:26am

Bottineau Transitway
DRAFT ENVIRONMENTAL IMPACT STATEMENT

Hennepin

CONSULTANTS:

Kimley-Horn and Associates, Inc.
2550 UNIVERSITY AVE. WEST, SUITE 345N
ST. PAUL, MINNESOTA 55114
TEL. NO. (651) 645–4197
FAX. NO. (651) 645–5116

SRF Consulting Group, Inc.

LTK Engineering Services

DRAWING NAME	BOTT–TYP C_03.dwg
DESIGNED BY:	
DRAWN BY:	
CHECKED BY:	
DATE:	6/29/12
PROJECT NO.	160528003.4.100

BOTTINEAU CORRIDOR
DRAFT EIS
CONCEPTUAL DESIGN

LRT ALIGNMENT C
SHEET 15 OF 29

TYPICAL SECTION C-03

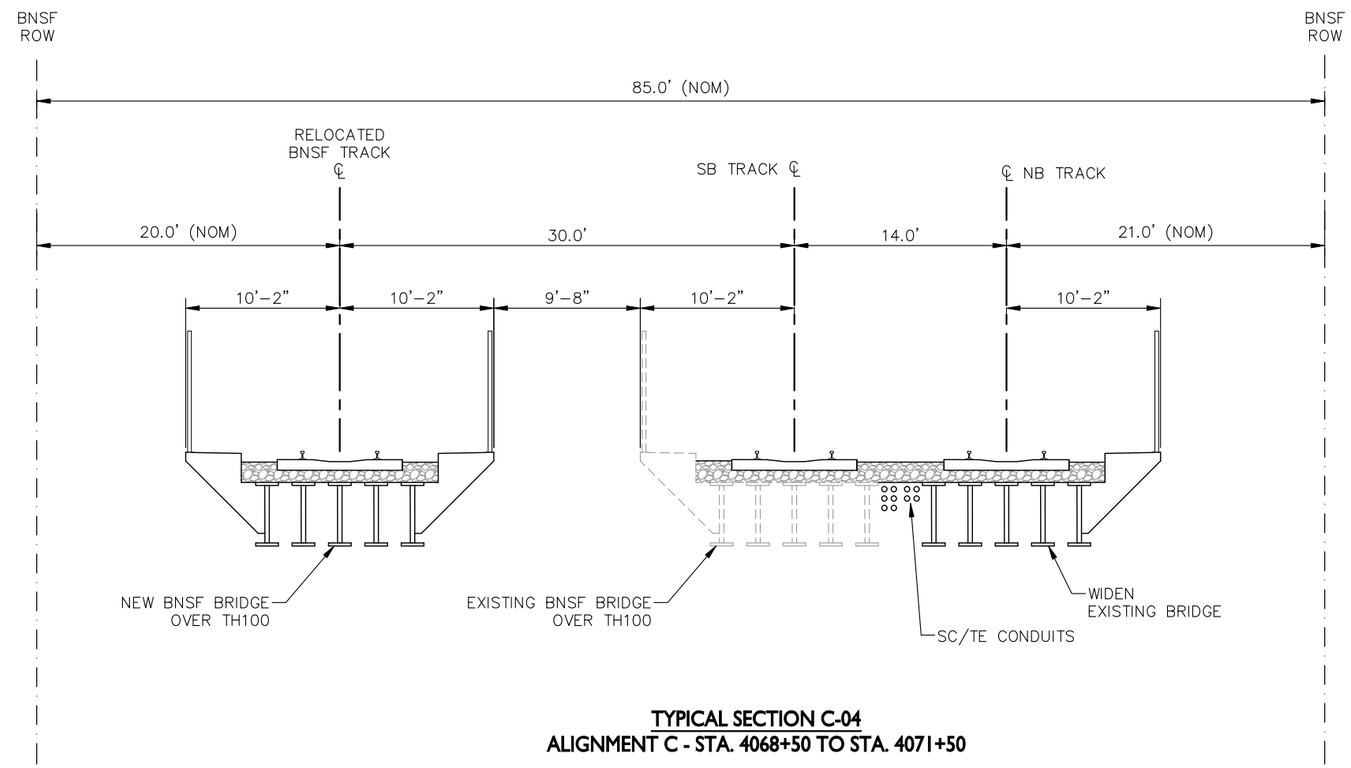

TYPICAL SECTION C-04
ALIGNMENT C - STA. 4068+50 TO STA. 4071+50

NOTE: STATIONING REPRESENTS THE SB LRT TRACK

BottineauTransitway
DRAFT ENVIRONMENTAL IMPACT STATEMENT

Hennepin

CONSULTANTS:

Kimley-Horn and Associates, Inc.
2550 UNIVERSITY AVE. WEST, SUITE 345N
ST. PAUL, MINNESOTA 55114
TEL. NO. (651) 645-4197
FAX. NO. (651) 645-5116

SRF Consulting Group, Inc.

LTK Engineering Services

DRAWING NAME	BOTT-TYP C_04.dwg
DESIGNED BY:	
DRAWN BY:	
CHECKED BY:	
DATE:	6/29/12
PROJECT NO.	160528003.4.100

BOTTINEAU CORRIDOR
DRAFT EIS
CONCEPTUAL DESIGN

LRT ALIGNMENT C
SHEET 16 OF 29

TYPICAL SECTION C-04

SHEET NUMBER
61 OF 122

P:\Projects\C4147.02 - Bottineau DEIS\C3D\BOTT-TYP C_04.dwg August 24, 2012 - 9:26am

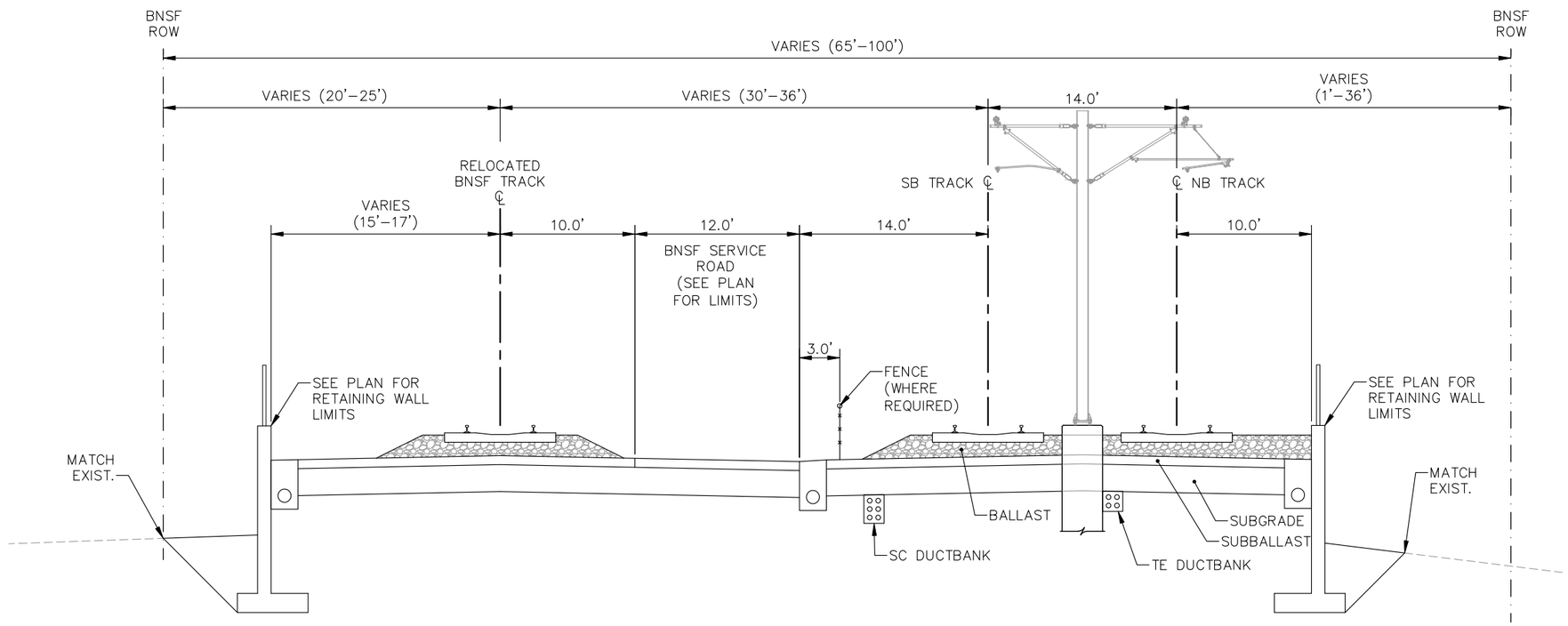

TYPICAL SECTION C-05
ALIGNMENT C - STA. 4071+50 TO STA. 4083+00

NOTE: STATIONING REPRESENTS THE SB LRT TRACK

P:\Projects\C4147.02 – Bottineau DEIS\C3D\BOTT–TYP C_05.dwg August 24, 2012 – 9:26am

Bottineau Transitway
DRAFT ENVIRONMENTAL IMPACT STATEMENT

Hennepin

CONSULTANTS:

Kimley-Horn and Associates, Inc.
2550 UNIVERSITY AVE. WEST, SUITE 345N
ST. PAUL, MINNESOTA 55114
TEL. NO. (651) 645–4197
FAX. NO. (651) 645–5116

SRF Consulting Group, Inc.

LTK Engineering Services

DRAWING NAME	BOTT–TYP C_05.dwg
DESIGNED BY:	
DRAWN BY:	
CHECKED BY:	
DATE:	6/29/12
PROJECT NO.	160528003.4.100

BOTTINEAU CORRIDOR
DRAFT EIS
CONCEPTUAL DESIGN

LRT ALIGNMENT C
SHEET 17 OF 29

TYPICAL SECTION C-05

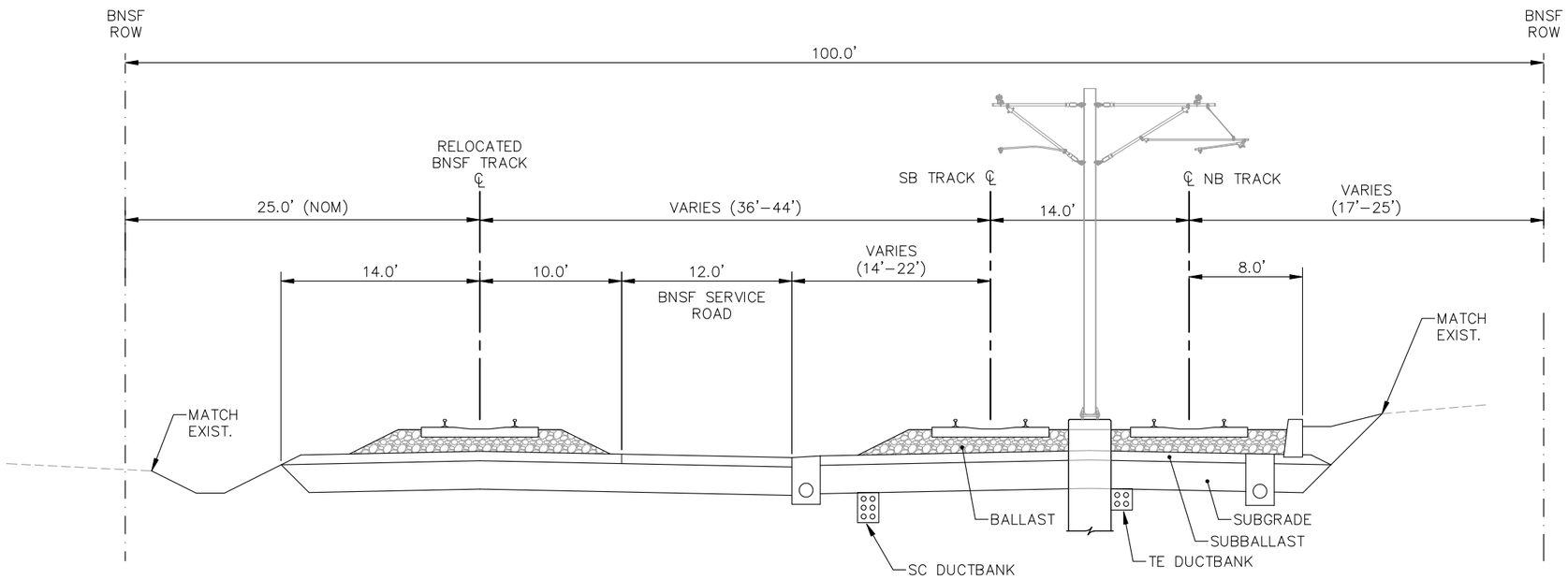

TYPICAL SECTION C-06
ALIGNMENT C - STA. 4083+00 TO STA. 4115+50

NOTE: STATIONING REPRESENTS THE SB LRT TRACK

BottineauTransitway
DRAFT ENVIRONMENTAL IMPACT STATEMENT

Hennepin

CONSULTANTS:

Kimley-Horn and Associates, Inc.
2550 UNIVERSITY AVE. WEST, SUITE 345N
ST. PAUL, MINNESOTA 55114
TEL. NO. (651) 645-4197
FAX. NO. (651) 645-5116

SRF Consulting Group, Inc.

LTK Engineering Services

DRAWING NAME	BOTT-TYP C_06.dwg
DESIGNED BY:	
DRAWN BY:	
CHECKED BY:	
DATE:	6/29/12
PROJECT NO.	160528003.4.100

BOTTINEAU CORRIDOR
DRAFT EIS
CONCEPTUAL DESIGN

LRT ALIGNMENT C
SHEET 18 OF 29

TYPICAL SECTION C-06

SHEET NUMBER
63 OF 122

P:\Projects\C4147.02 – Bottineau DEIS\C3D\BOTT-TYP C_06.dwg August 24, 2012 – 9:27am

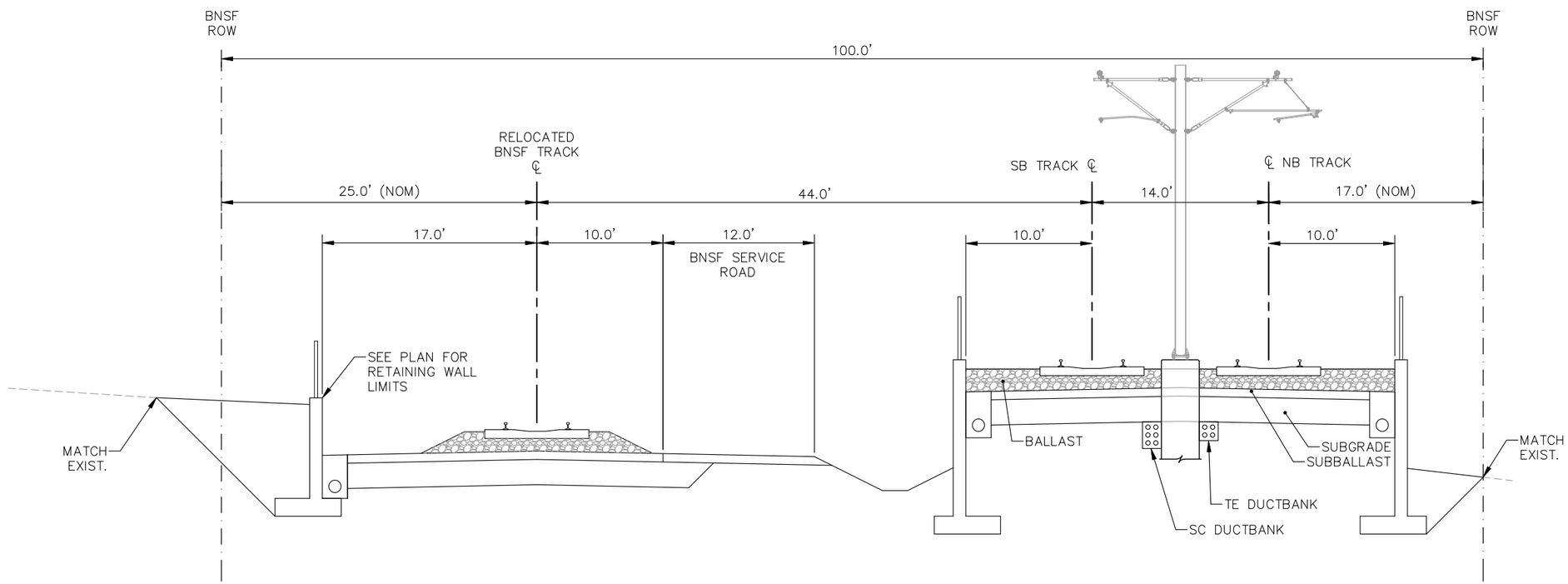

TYPICAL SECTION C-07
ALIGNMENT C - STA. 4115+50 TO STA. 4121+50

NOTE: STATIONING REPRESENTS THE SB LRT TRACK

BottineauTransitway
DRAFT ENVIRONMENTAL IMPACT STATEMENT

Hennepin

CONSULTANTS:

Kimley-Horn and Associates, Inc.
2550 UNIVERSITY AVE. WEST, SUITE 345N
ST. PAUL, MINNESOTA 55114
TEL. NO. (651) 645-4197
FAX. NO. (651) 645-5116

SRF Consulting Group, Inc.

LTK Engineering Services

DRAWING NAME	BOTT-TYP C_07.dwg
DESIGNED BY:	
DRAWN BY:	
CHECKED BY:	
DATE:	6/29/12
PROJECT NO.	160528003.4.100

BOTTINEAU CORRIDOR
DRAFT EIS
CONCEPTUAL DESIGN

LRT ALIGNMENT C
SHEET 19 OF 29

TYPICAL SECTION C-07

SHEET NUMBER
64 OF 122

P:\Projects\C4147.02 - Bottineau DEIS\C3D\BOTT-TYP C_07.dwg August 24, 2012 - 9:27am

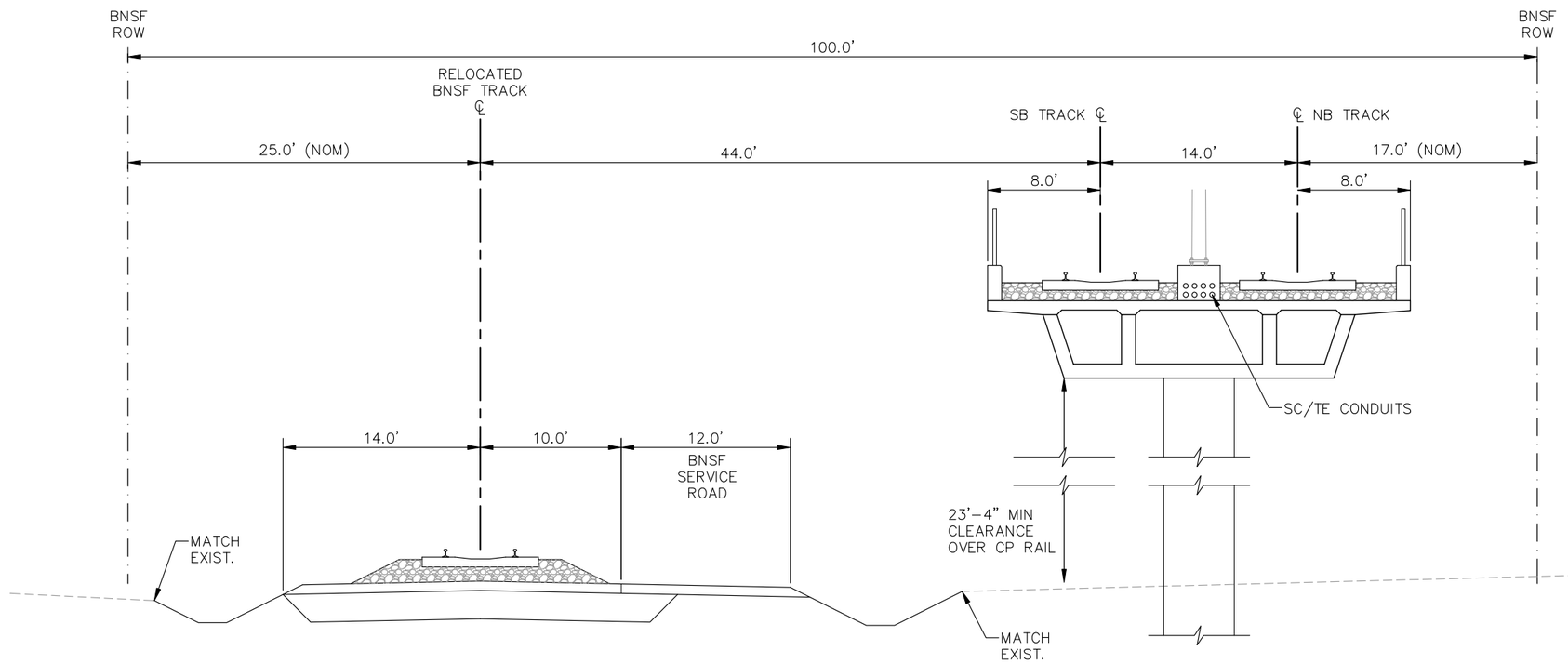

TYPICAL SECTION C-08
ALIGNMENT C - STA. 4121+50 TO STA. 4126+50

NOTE: STATIONING REPRESENTS THE SB LRT TRACK

P:\Projects\C4147.02 - Bottineau DEIS\C3D\BOTT-TYP C_08.dwg August 24, 2012 - 9:27am

BottineauTransitway
DRAFT ENVIRONMENTAL IMPACT STATEMENT

Hennepin

CONSULTANTS:

Kimley-Horn and Associates, Inc.
2550 UNIVERSITY AVE. WEST, SUITE 345N
ST. PAUL, MINNESOTA 55114
TEL. NO. (651) 645-4197
FAX. NO. (651) 645-5116

SRF Consulting Group, Inc.

LTK Engineering Services

DRAWING NAME	BOTT-TYP C_08.dwg
DESIGNED BY:	
DRAWN BY:	
CHECKED BY:	
DATE:	6/29/12
PROJECT NO.	160528003.4.100

BOTTINEAU CORRIDOR
DRAFT EIS
CONCEPTUAL DESIGN

LRT ALIGNMENT C
SHEET 20 OF 29

TYPICAL SECTION C-08

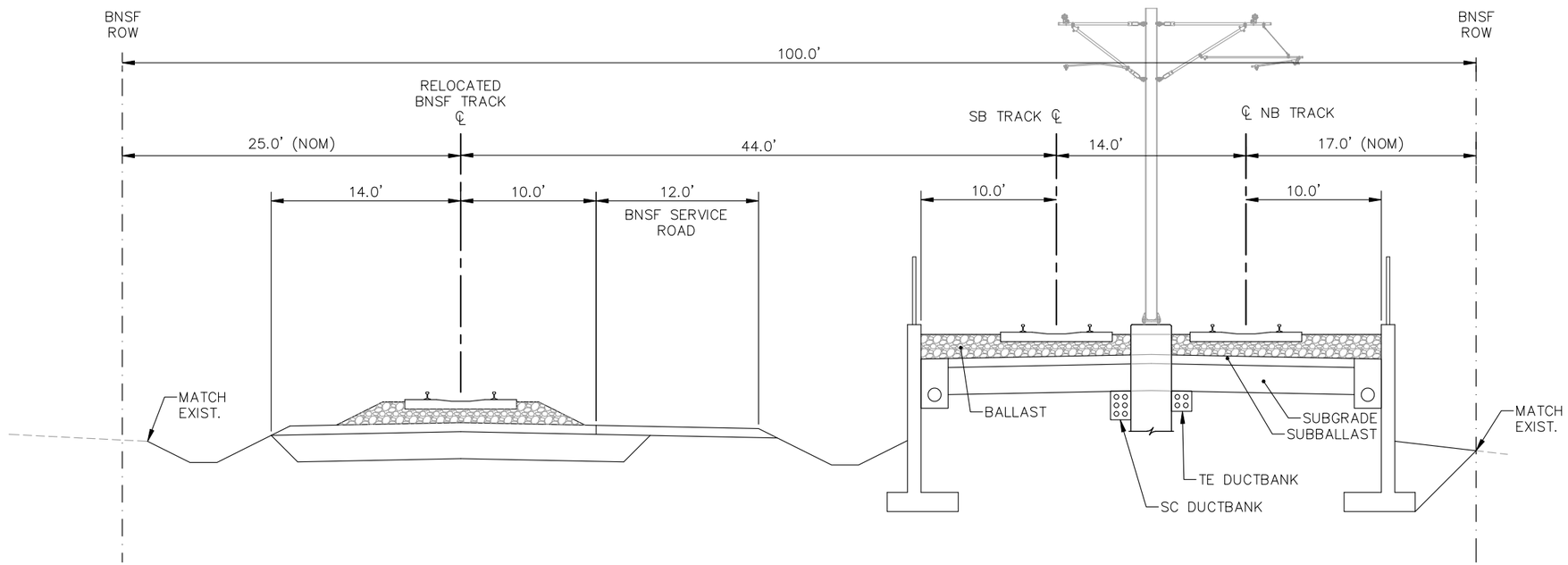

TYPICAL SECTION C-09
ALIGNMENT C - STA. 4126+50 TO STA. 4144+50

NOTE: STATIONING REPRESENTS THE SB LRT TRACK

P:\Projects\C4147.02 - Bottineau DEIS\C3D\BOTT-TYP C_09.dwg August 24, 2012 - 9:27am

BottineauTransitway
DRAFT ENVIRONMENTAL IMPACT STATEMENT

Hennepin

CONSULTANTS:

Kimley-Horn and Associates, Inc.
2550 UNIVERSITY AVE. WEST, SUITE 345N
ST. PAUL, MINNESOTA 55114
TEL. NO. (651) 645-4197
FAX. NO. (651) 645-5116

SRF Consulting Group, Inc.

LTK Engineering Services

DRAWING NAME	BOTT-TYP C_09.dwg
DESIGNED BY:	
DRAWN BY:	
CHECKED BY:	
DATE:	6/29/12
PROJECT NO.	160528003.4.100

BOTTINEAU CORRIDOR
DRAFT EIS
CONCEPTUAL DESIGN

LRT ALIGNMENT C
SHEET 21 OF 29

TYPICAL SECTION C-09

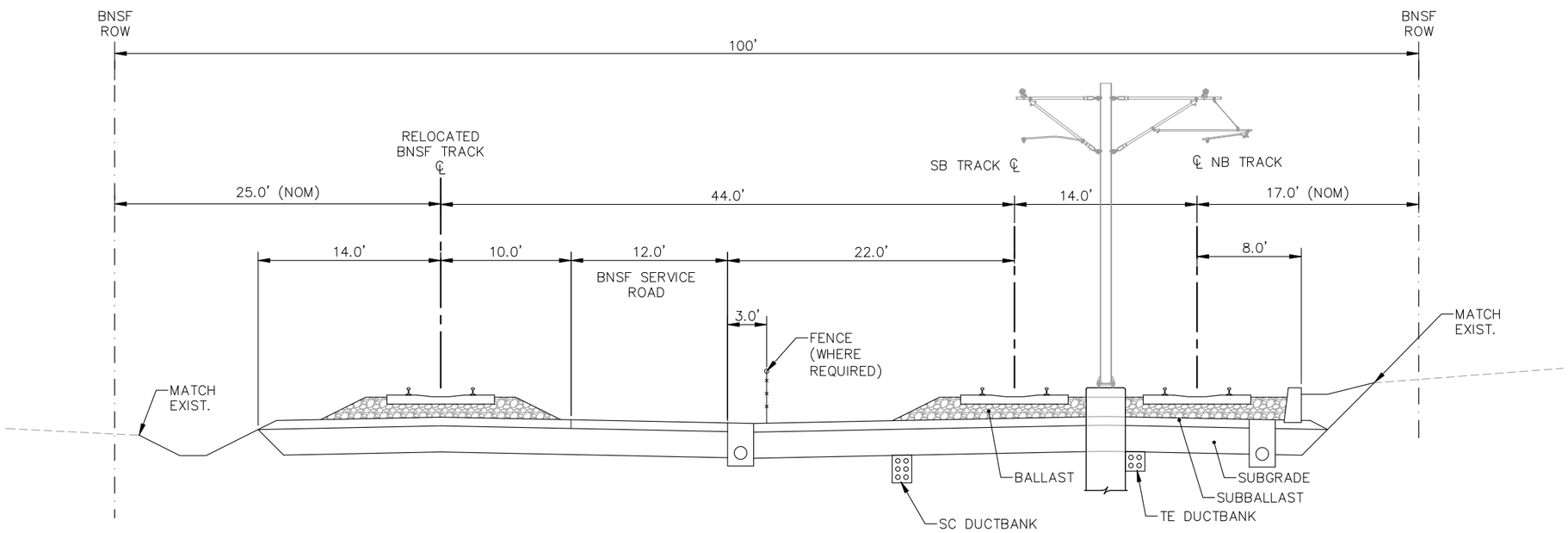

TYPICAL SECTION C-10
ALIGNMENT C - STA. 4144+50 TO STA. 4151+00

NOTE: STATIONING REPRESENTS THE SB LRT TRACK

P:\Projects\C4147.02 – Bottineau DEIS\C3D\BOTT–TYP C_10.dwg August 24, 2012 – 9:27am

BottineauTransitway
DRAFT ENVIRONMENTAL IMPACT STATEMENT

Hennepin

CONSULTANTS:

Kimley-Horn and Associates, Inc.
2550 UNIVERSITY AVE. WEST, SUITE 345N
ST. PAUL, MINNESOTA 55114
TEL. NO. (651) 645-4197
FAX. NO. (651) 645-5116

SRF Consulting Group, Inc.

LTK Engineering Services

DRAWING NAME	BOTT–TYP C_10.dwg
DESIGNED BY:	
DRAWN BY:	
CHECKED BY:	
DATE:	6/29/12
PROJECT NO.	160528003.4.100

BOTTINEAU CORRIDOR
DRAFT EIS
CONCEPTUAL DESIGN

LRT ALIGNMENT C
SHEET 22 OF 29

TYPICAL SECTION C-10\

SHEET NUMBER
67 OF 122

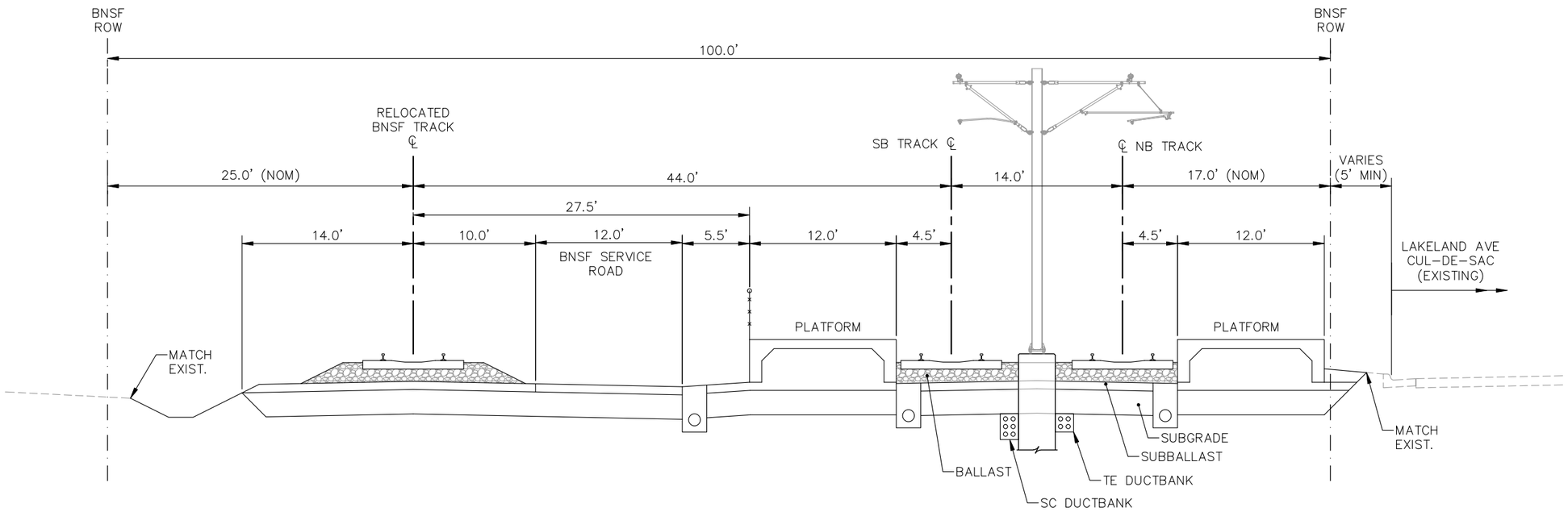

TYPICAL SECTION C-10A
ALIGNMENT C - BASS LAKE ROAD STATION

NOTE: STATIONING REPRESENTS THE SB LRT TRACK

P:\Projects\C4147.02 - Bottineau DEIS\C3D\BOTT-TYP C_10A.dwg August 24, 2012 - 9:27am

Bottineau Transitway
DRAFT ENVIRONMENTAL IMPACT STATEMENT

Hennepin

CONSULTANTS:

Kimley-Horn and Associates, Inc.
2550 UNIVERSITY AVE. WEST, SUITE 345N
ST. PAUL, MINNESOTA 55114
TEL. NO. (651) 645-4197
FAX. NO. (651) 645-5116

SRF Consulting Group, Inc.

LTK Engineering Services

DRAWING NAME	BOTT-TYP C_10A.dwg
DESIGNED BY:	
DRAWN BY:	
CHECKED BY:	
DATE:	6/29/12
PROJECT NO.	160528003.4.100

BOTTINEAU CORRIDOR
DRAFT EIS
CONCEPTUAL DESIGN

LRT ALIGNMENT C
SHEET 23 OF 29

TYPICAL SECTION C-10A

SHEET NUMBER
68 OF 122

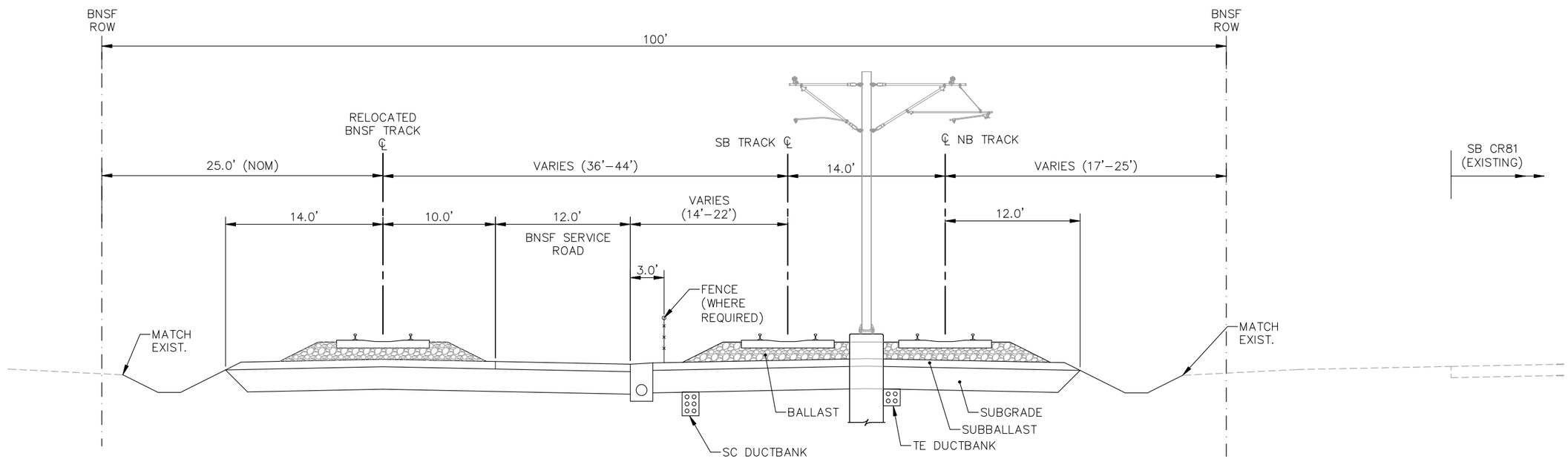

TYPICAL SECTION C-11
ALIGNMENT C - STA. 4151+00 TO 4256+86

NOTE: STATIONING REPRESENTS THE SB LRT TRACK

P:\Projects\C4147.02 – Bottineau DEIS\C3D\BOTT–TYP C_11.dwg August 24, 2012 – 9:28am

Bottineau Transitway
DRAFT ENVIRONMENTAL IMPACT STATEMENT

Hennepin

CONSULTANTS:

Kimley-Horn and Associates, Inc.
2550 UNIVERSITY AVE. WEST, SUITE 345N
ST. PAUL, MINNESOTA 55114
TEL. NO. (651) 645-4197
FAX. NO. (651) 645-5116

SRF Consulting Group, Inc.

LTK Engineering Services

DRAWING NAME	BOTT–TYP C_11.dwg
DESIGNED BY:	
DRAWN BY:	
CHECKED BY:	
DATE:	6/29/12
PROJECT NO.	160528003.4.100

BOTTINEAU CORRIDOR
DRAFT EIS
CONCEPTUAL DESIGN

LRT ALIGNMENT C
SHEET 24 OF 29

TYPICAL SECTION C-11

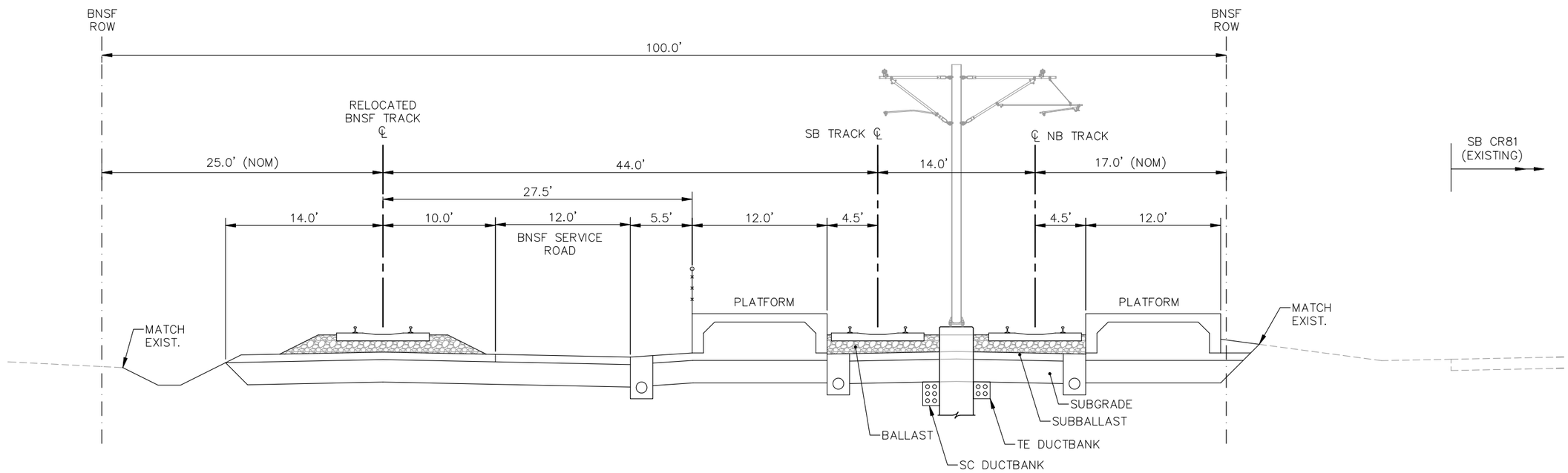

TYPICAL SECTION C-11A
ALIGNMENT C - 63RD AVENUE STATION

NOTE: STATIONING REPRESENTS THE SB LRT TRACK

Bottineau Transitway
DRAFT ENVIRONMENTAL IMPACT STATEMENT

Hennepin

CONSULTANTS:

Kimley-Horn and Associates, Inc.
2550 UNIVERSITY AVE. WEST, SUITE 345N
ST. PAUL, MINNESOTA 55114
TEL. NO. (651) 645-4197
FAX. NO. (651) 645-5116

SRF Consulting Group, Inc.

LTK Engineering Services

DRAWING NAME	BOTT-TYP C_11A.dwg
DESIGNED BY:	
DRAWN BY:	
CHECKED BY:	
DATE:	6/29/12
PROJECT NO.	160528003.4.100

BOTTINEAU CORRIDOR
DRAFT EIS
CONCEPTUAL DESIGN

LRT ALIGNMENT C
SHEET 25 OF 29

TYPICAL SECTION C-11A

SHEET NUMBER
70 OF 122

P:\Projects\C4147.02 - Bottineau DEIS\C3D\BOTT-TYP C_11A.dwg August 24, 2012 - 9:28am

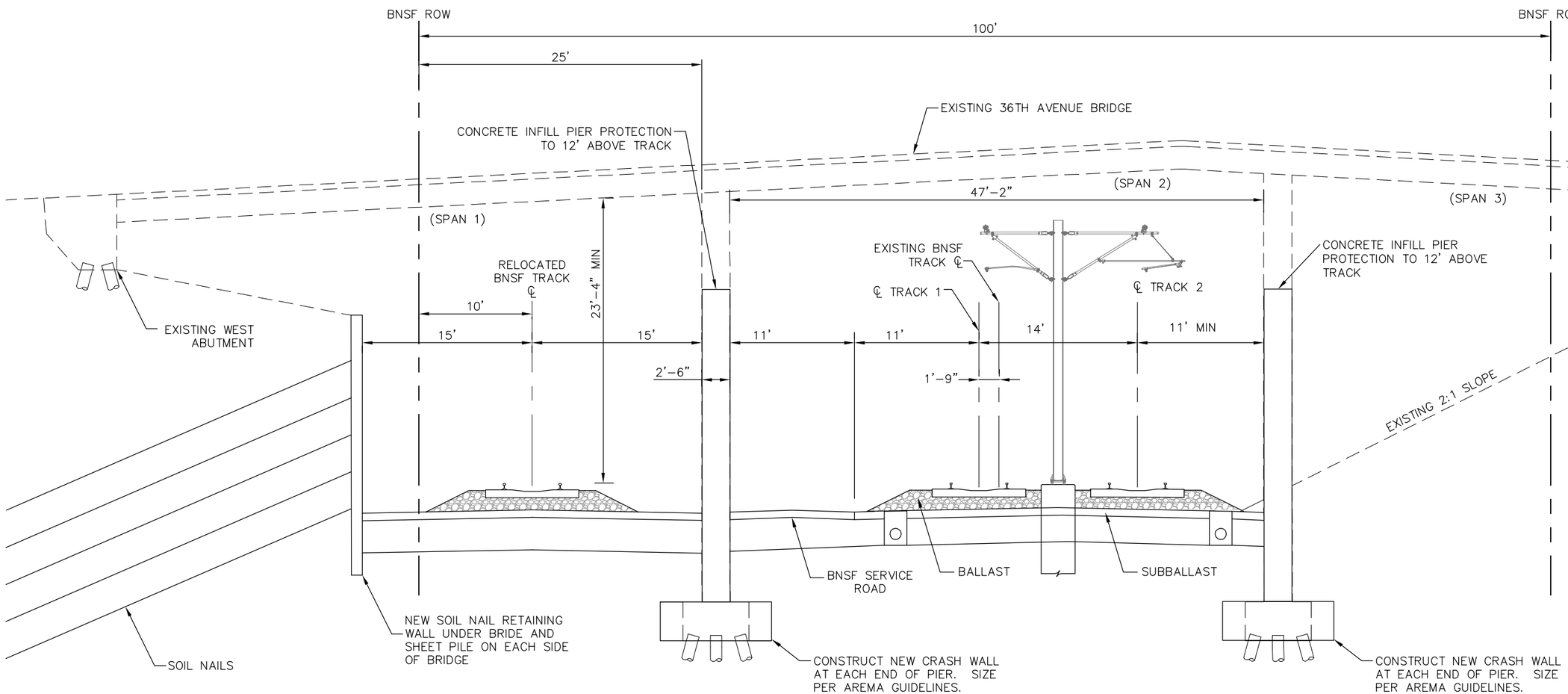

TYPICAL SECTION C-12
36th Avenue Bridge
STA. 4009+00 TO 4009+70

NOTE: STATIONING REPRESENTS THE SB LRT TRACK

K:\TWC_Transit\HCRRA\BOTTINEAU_DEIS\CADD\PLAN_SHEETS\BOTT-TYP 36th Ave.dwg January 08, 2013 - 2:58pm

Bottineau Transitway
DRAFT ENVIRONMENTAL IMPACT STATEMENT

Hennepin

CONSULTANTS:

Kimley-Horn and Associates, Inc.
2550 UNIVERSITY AVE. WEST, SUITE 345N
ST. PAUL, MINNESOTA 55114
TEL. NO. (651) 645-4197
FAX NO. (651) 645-5116

SRF Consulting Group, Inc.

LTK Engineering Services

DRAWING NAME	BOTT-TYP 36th Ave.dwg
DESIGNED BY:	
DRAWN BY:	
CHECKED BY:	
DATE:	9/5/2012
PROJECT NO.	160528003.4.100

BOTTINEAU CORRIDOR
ALTERNATIVES ANALYSIS
CONCEPTUAL DESIGN

LRT ALIGNMENT C
SHEET 26 OF 30

TYPICAL SECTION C-12

SHEET NUMBER
71 OF 122

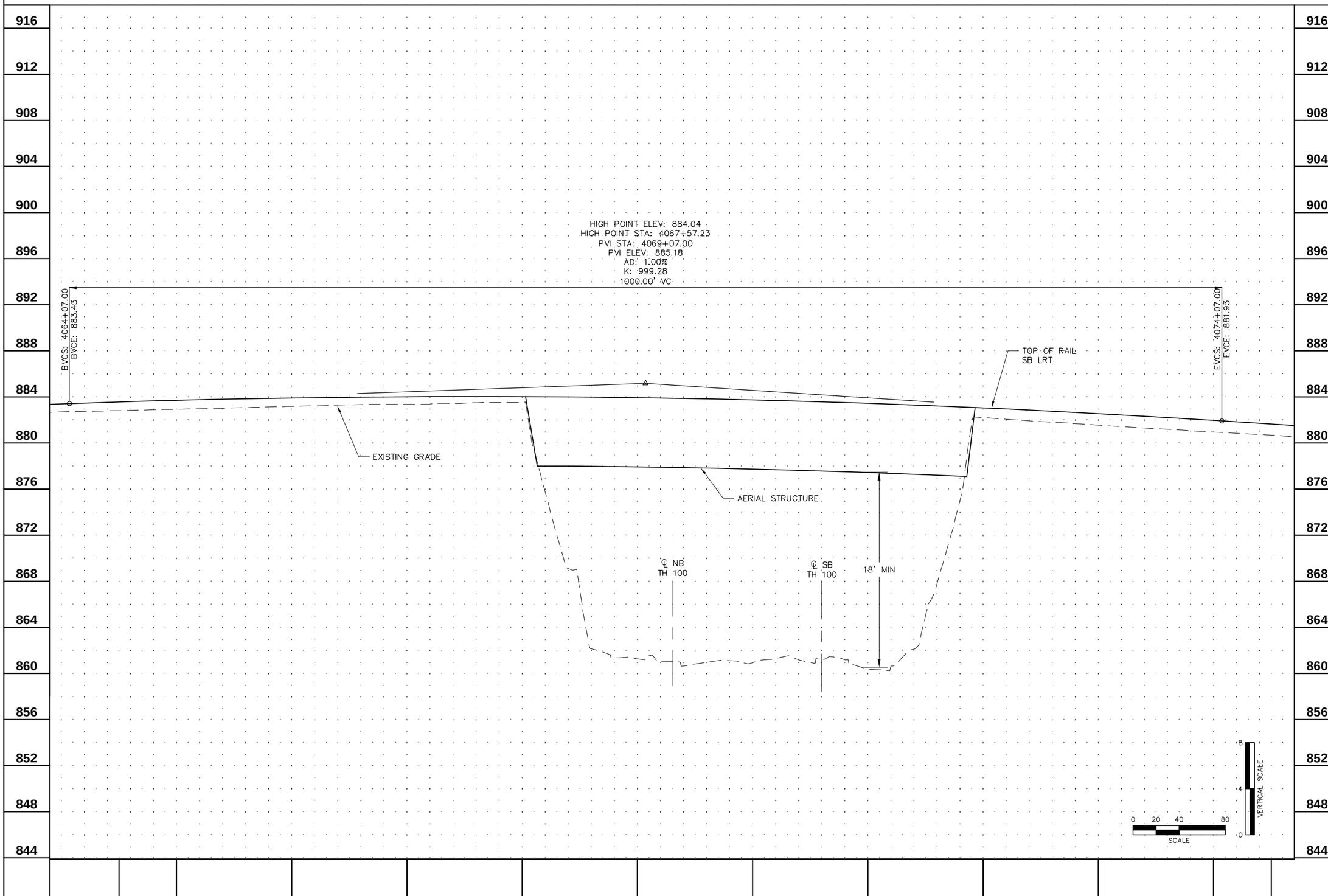

K:\TWC_Transit\HCRRA\BOTTINEAU_DEIS\CADD\PLAN_SHEETS\Profile\BOTT-PRF-C-01.dwg September 05, 2012 - 8:33pm

BottineauTransitway
DRAFT ENVIRONMENTAL IMPACT STATEMENT

Hennepin

CONSULTANTS:

Kimley-Horn and Associates, Inc.
2550 UNIVERSITY AVE. WEST, SUITE 345N
ST. PAUL, MINNESOTA 55114
TEL. NO. (651) 645-4197
FAX. NO. (651) 645-5116

SRF Consulting Group, Inc.

LTK Engineering Services

DRAWING NAME	BOTT-PRF-C-01.dwg
DESIGNED BY:	
DRAWN BY:	
CHECKED BY:	
DATE:	9/5/2012
PROJECT NO.	160528003.4.100

BOTTINEAU CORRIDOR
DRAFT EIS
CONCEPTUAL DESIGN

ALIGNMENT C
CRITICAL PROFILE
W. BROADWAY OVER TH 100
SHEET 26 OF 30

CRITICAL PROFILE

SHEET NUMBER
72 OF 122

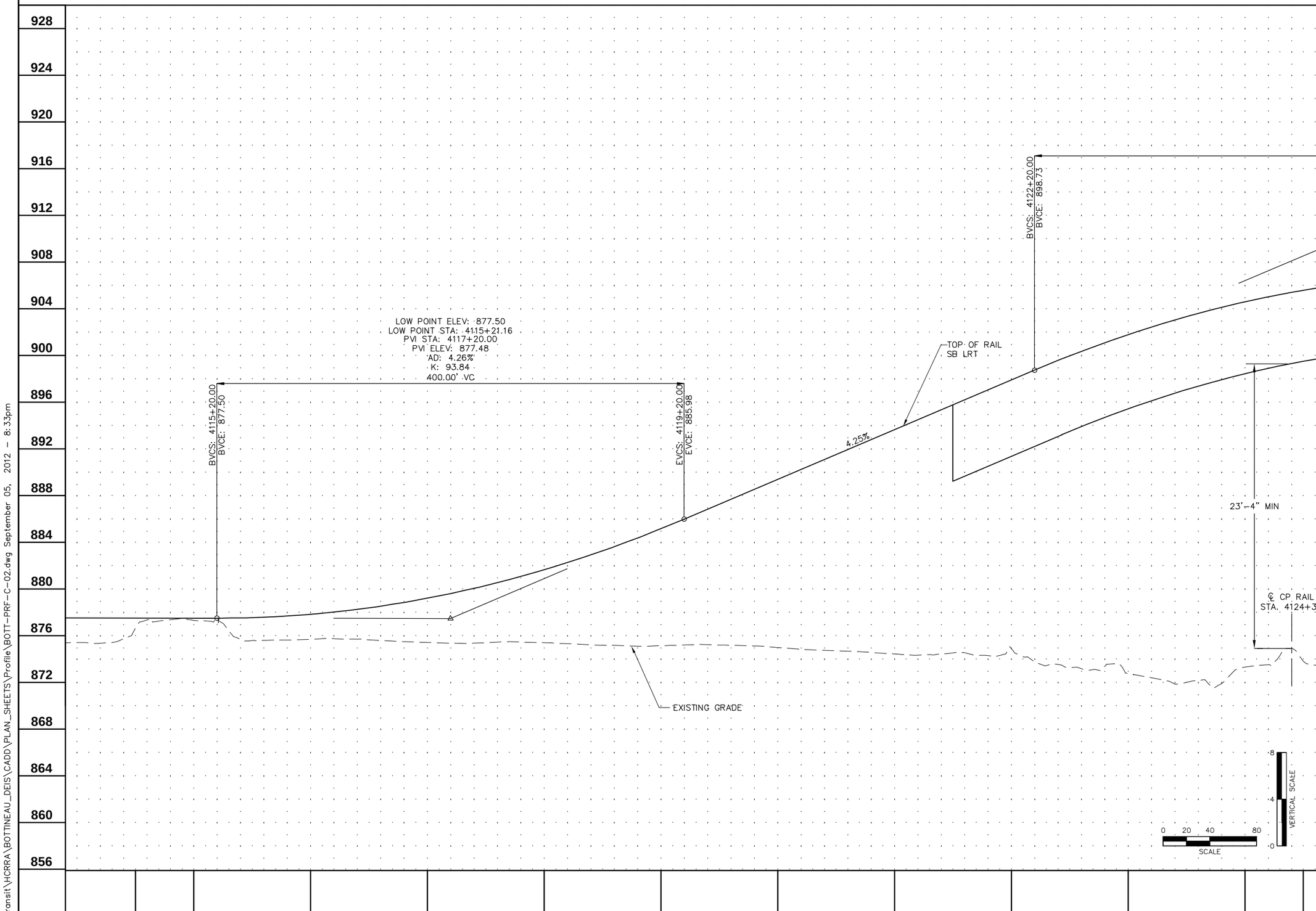

K:\TWC_Transit\HCRRA\BOTTINEAU_DEIS\CADD\PLAN_SHEETS\Profile\BOTT-PRF-C-02.dwg September 05, 2012 - 8:33pm

Bottineau Transitway
DRAFT ENVIRONMENTAL IMPACT STATEMENT

Hennepin

CONSULTANTS:

Kimley-Horn and Associates, Inc.
2550 UNIVERSITY AVE. WEST, SUITE 345N
ST. PAUL, MINNESOTA 55114
TEL. NO. (651) 645-4197
FAX NO. (651) 645-5116

SRF Consulting Group, Inc.

LTK Engineering Services

DRAWING NAME	BOTT-PRF-C-02.dwg
DESIGNED BY:	
DRAWN BY:	
CHECKED BY:	
DATE:	9/5/2012
PROJECT NO.	160528003.4.100

BOTTINEAU CORRIDOR
DRAFT EIS
CONCEPTUAL DESIGN

ALIGNMENT C
CRITICAL PROFILE
CP RAIL CROSSING
SHEET 27 OF 30

CRITICAL PROFILE

SHEET NUMBER
73 OF 122

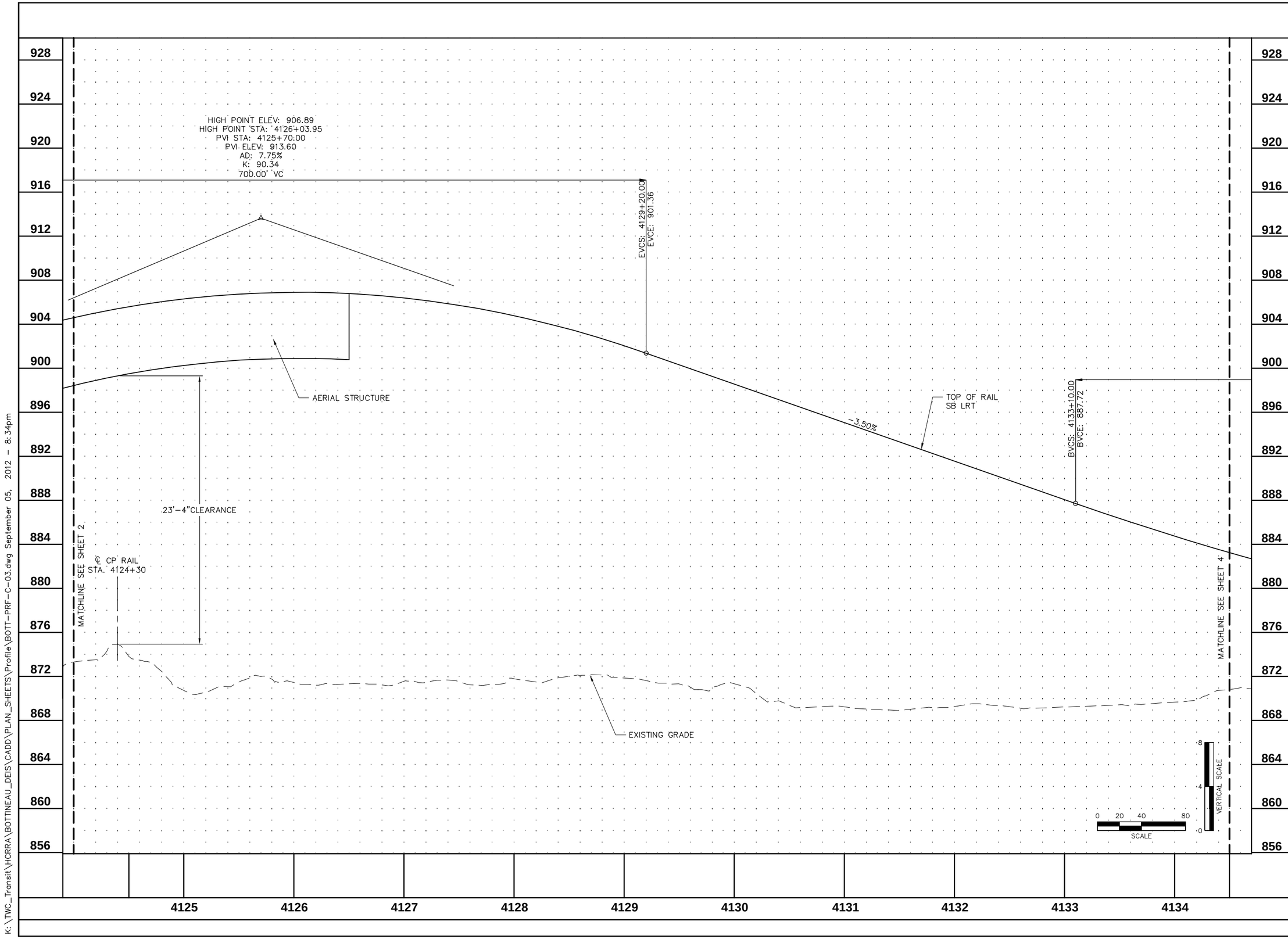

K:\TWC_Transit\HCRRA\BOTTINEAU_DEIS\CADD\PLAN_SHEETS\Profile\BOTT-PRF-C-03.dwg September 05, 2012 - 8:34pm

Bottineau Transitway
DRAFT ENVIRONMENTAL IMPACT STATEMENT

Hennepin

CONSULTANTS:

Kimley-Horn and Associates, Inc.
2550 UNIVERSITY AVE. WEST, SUITE 345N
ST. PAUL, MINNESOTA 55114
TEL. NO. (651) 645-4197
FAX NO. (651) 645-5116

SRF Consulting Group, Inc.

LTK Engineering Services

DRAWING NAME	BOTT-PRF-C-03.dwg
DESIGNED BY:	
DRAWN BY:	
CHECKED BY:	
DATE:	9/5/2012
PROJECT NO.	160528003.4.100

BOTTINEAU CORRIDOR
DRAFT EIS
CONCEPTUAL DESIGN

ALIGNMENT C
CRITICAL PROFILE
CP RAIL CROSSING
SHEET 28 OF 30

CRITICAL PROFILE

SHEET NUMBER
74 OF 122

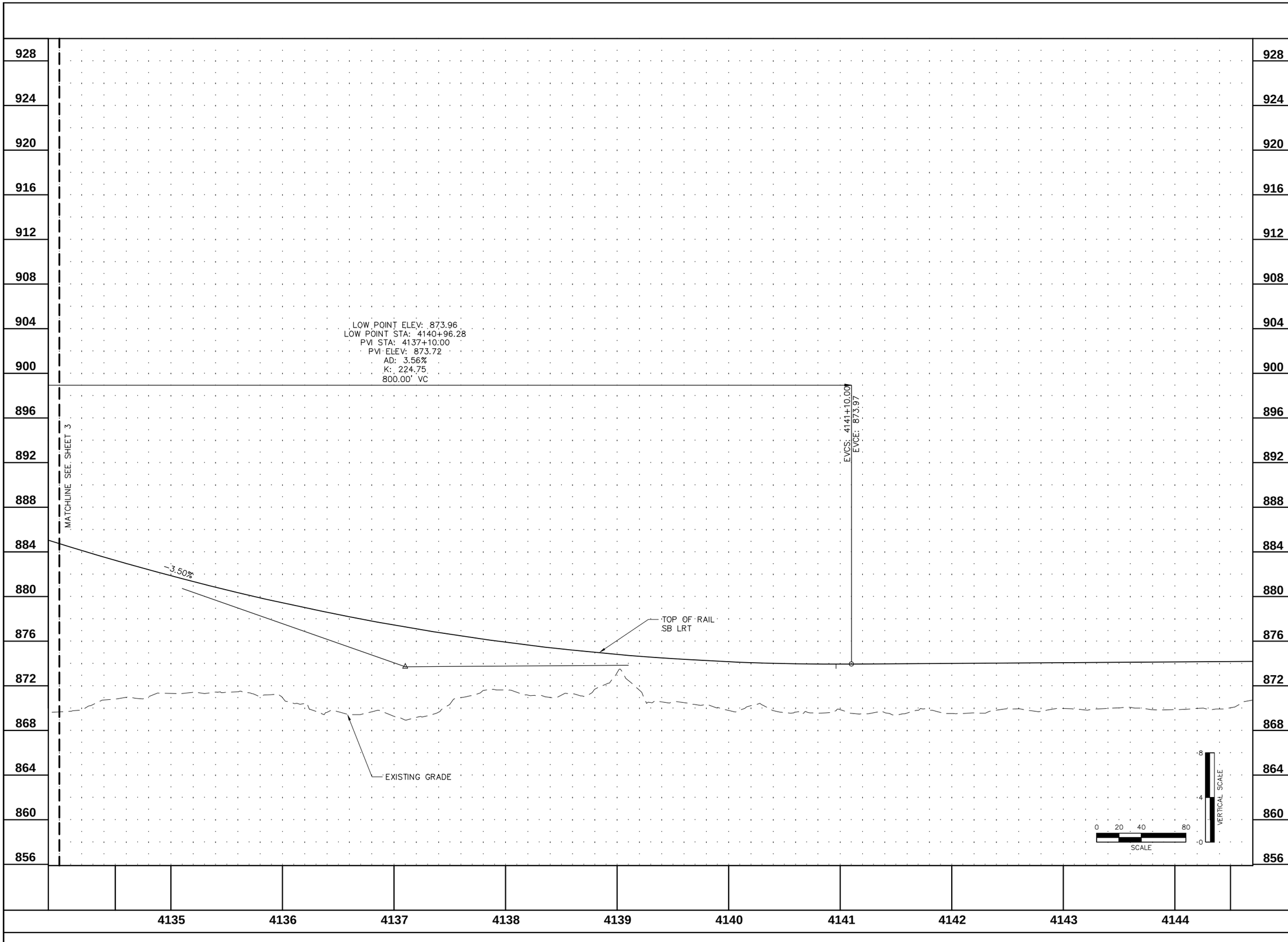

Bottineau Transitway
DRAFT ENVIRONMENTAL IMPACT STATEMENT

Hennepin

CONSULTANTS:

Kimley-Horn and Associates, Inc.
2550 UNIVERSITY AVE. WEST, SUITE 345N
ST. PAUL, MINNESOTA 55114
TEL. NO. (651) 645-4197
FAX NO. (651) 645-5116

SRF Consulting Group, Inc.

LTK Engineering Services

DRAWING NAME	BOTT-PRF-C-04.dwg
DESIGNED BY:	
DRAWN BY:	
CHECKED BY:	
DATE:	9/5/2012
PROJECT NO.	160528003.4.100

BOTTINEAU CORRIDOR
DRAFT EIS
CONCEPTUAL DESIGN

ALIGNMENT C
CRITICAL PROFILE
CP RAIL CROSSING
SHEET 29 OF 30

CRITICAL PROFILE

SHEET NUMBER
75 OF 122

K:\TWC_Transit\HCRRA\BOTTINEAU_DEIS\CADD\PLAN_SHEETS\Profile\BOTT-PRF-C-04.dwg September 05, 2012 - 8:34pm