VALUE ENGINEERING STUDY

OF

SR 87 Connector

From US90/SR87S Intersection

North to SR87N

Santa Rosa County

FM: 416748-3

VE Study No: 1300304

January 14-17, 2012

This study has been performed in accordance with current FDOT Value Engineering Procedures and Techniques

VALUE ENGINEERING STUDY
TEAM LEADER

2/7/13

Keith Alan Hinson

KEITH ALAN HINSON, P.E.
FLORIDA REGISTRATION No. 51966

Table of Contents

Table of Contents 2
Executive Summary 7
Summary of Approved Savings 7
Secretary Approval Form 8
Team Members 9
Resources 10
Project Description 11
Description 12
Description 13
Value Engineering Methodology 14
Cost Model 15
Function Analysis 18
Speculation / Evaluation 19
VE Idea 1 20
Description 20
Planned Detail vs. VE Idea Detail Station 257+00 21
Planned Detail vs. VE Idea Detail Clear Creek Bridge 22
Calculations for Alternate 1 23
Cost Comparison Alternate 1 24
Calculations for Alternate 2 25
Cost Comparison Alternate 2 26
VE Idea 2 27
Description 27
Planned Detail vs. VE Idea Detail Station 257+00 28
Planned Detail vs. VE Idea Detail Clear Creek Bridge 29
Calculations for Alternate 1 30

Cost Comparison for Alternate 1 31
Calculations for Alternate 2 32
Cost Comparison for Alternate 2 33
VE Idea 3 34
Description 34
Planned Detail vs. VE Idea Detail (Urban) 35
Planned Detail vs. VE Idea Detail (Suburban) 36
Planned Detail vs. VE Idea Detail (Bridges) 37
Calculations for Alternate 1 38
Cost Comparison Alternate 1 (Urban) 39
Cost Comparison Alternate 1 (Suburban) 40
Calculations for Alternate 2 41
Cost Comparison Alternate 2 (Urban) 42
Cost Comparison Alternate 2 (Suburban) 43
VE Idea 4 44
Description 44
Planned Detail vs. VE Idea Detail (Urban) 45
Planned Detail vs. VE Idea Detail (Suburban) 46
Planned Detail vs. VE Idea Detail (Blackwater Bridge) 47
Planned Detail vs. VE Idea Detail Station 257+00 48
Planned Detail vs. VE Idea Detail Clear Creek Bridge 49
Calculations for Alternate 1 (Urban) 50
Cost Comparison Alternate 1 (Urban) 51
Calculations for Alternate 1 (Suburban) 52
Cost Comparison Alternate 1 (Suburban) 53
Calculations for Alternate 1 54
Cost Comparison Alternate 1 55
Calculations for Alternate 2 56
Cost Comparison Alternate 2 57
VE Idea 5 58
Description 58

Planned Detail vs. VE Idea Detail (Urban) 59
Planned Detail vs. VE Idea Detail (Suburban) 60
Planned Detail vs. VE Idea Detail Blackwater Bridge 61
Planned Detail vs. VE Idea Detail Station 257+00 62
Planned Detail vs. VE Idea Detail Clear Creek Bridge 63
Calculations for Alternate 1 Urban 64
Cost Comparison Alternate 1 (Urban) 65
Calculations for Alternate 1 (Suburban) 66
Cost Comparison Alternate 1 Suburban 67
Calculations for Alternate 1 68
Cost Comparison for Alternate 1 69
Calculations for Alternate 2 70
Cost Comparison for Alternate 2 71
VE Idea 6 72
Planned Detail vs. VE Idea Detail (Urban) 73
Planned Detail vs. VE Idea Detail (Suburban) 74
Planned Detail vs. VE Idea Detail 75
Calculations for Alternate 1 (Urban) 76
Calculations for Alternate 1 (Suburban) 77
Cost Comparison Alternate 1 78
Calculations for Alternate 2 (Urban) 79
Calculations for Alternate 2 (Suburban) 80
Cost Comparison Alternate 2 81
VE Idea 7 82
Planned Detail vs. VE Idea Detail (Urban) 83
Planned Detail vs. VE Idea Detail (Suburban) 84
Planned Detail vs. VE Idea Detail Blackwater Bridge 85
Planned Detail vs. VE Idea Detail Station 257+00 86
Planned Detail vs. VE Idea Detail Clear Creek Bridge 87
Calculations for Alternate 1 (Urban) 88
Cost Comparison Alternate 1 (Urban) 89

Calculations for Alternate 1 (Suburban) 90
Cost Comparison Alternate 1 (Suburban) 91
Calculations for Alternate 1 92
Cost Comparison Alternate 1 93
Calculations for Alternate 2 94
Cost Comparison Alternate 2 95
Planned Detail vs. VE Idea Detail (Urban) 96
Planned Detail vs. VE Idea Detail (Suburban) 97
Planned Detail vs. VE Idea Detail 98
Calculations for Alternate 1 (Urban) 99
Calculations for Alternate 1 (Urban) 100
Cost Comparison Alternate 1 (Deletion of 5’ Sidewalk) 101
Calculations for Alternate 2 (Urban) 102
Calculations for Alternate 2 (Urban) 103
Cost Comparison Alternate 2 (Deletion of 5’ Sidewalk) 104
VE Idea 8 105
Planned Detail vs. VE Idea Detail (Urban) 106
Planned Detail vs. VE Idea Detail (Suburban) 107
Planned Detail vs. VE Idea Detail 108
Calculations for Alternate 1 (Urban) 109
Calculations for Alternate 1 (Urban) 110
Cost Comparison Alternate 1 (Deletion of 5’ Sidewalk, except bridges) 111
Calculations for Alternate 2 (Urban) 112
Calculations for Alternate 2 (Urban) 113
Cost Comparison Alternate 2 (Deletion of 5’ Sidewalk, except bridges) 114
VE Idea 9 115
Planned Detail vs. VE Idea Detail 116
Cost Comparison for Alternate 1 117
Cost Comparison for Alternate 1 118
Cost Comparison for Alternate 1 119
Design Observations 120

Summary 121
Value Engineering Resolution Meeting Decisions 122
Cost Comparison for VE Idea 2 Revised..... 123
Implementation Plan 124

Executive Summary

This report documents the results of the Value Engineering Study for SR 87 Connector located in Santa Rosa County. The Value Engineering Study was performed by the Florida Department of Transportation, District Three in Chipley, FL during the week of January 14-17, 2013. The Value Engineering Team was led by the District Value Engineer, Keith Alan Hinson, P.E.

The study was conducted during the PD&E stage of development. FHWA requirements for this project involved presenting two different alternates at the upcoming Public Hearing. Therefore, the Value Engineering Team studied both alternates. The original estimate for alternate 1 is $130,636,575 and the original estimate for alternate 2 is $139,201,471. Both of these figures include the right-of-way cost which is $5,497,617 for alternate 1 and $5,615,587 for alternate 2.

The total value of the Approved Value Engineering Savings in summarized in the following table:

Summary of Approved Savings

VE IDEA	$ Savings Alternate 1
2. End Multi-Use Path at Heritage Trail, No Sidewalk	$759,710
6. Eliminate 5' Sidewalk East Side Entire Project	$5,279,604
9. Use Rural Typical in lieu of Suburban	$7,448,584
Total Savings Approved by Management	$13,487,898

Secretary Approval Form

STATE OF FLORIDA DEPARTMENT OF TRANSPORTATION

VALUE ENGINEERING STUDY REVIEW

COVER SHEET

	YEAR	DISTRICT	STUDY NO.					
Value Engineering Study Number:	13	003	04	New FHWA Reporting Requirements				
Financial Project Number:	416748-3			**Safety:** Recommendations that mitigate or reduce hazards on the facility	**Operations:** Recommendations that improve real-time service and/or local corridor or regional levels of service	**Environment:** Recommendations that successfully avoid or mitigate impacts to natural and/or cultural resources	**Construction:** Recommendations that improve work zone conditions, or expedite the project delivery	**Other:** Recommendations not readily categorized by the above performance indicators
Description:	**SR 87 Connector**							

	V.E. IDEA NO.	AGREE	DISAGREE					
End Multi-Use Path at Heritage Trail, Add 5' Sidewalk	1	☐	☐	☐	☐	☒	☒	☐
End Multi-Use Path at Heritage Trail, No Sidewalk	2	☑	☐	☐	☐	☒	☒	☐
Reduce Multi-Use Path Width from 12' to 10'	3	☐	☐	☐	☐	☒	☒	☐
10' Path to Heritage Trail, Add 5' Sidewalk	4	☐	☐	☐	☐	☒	☒	☐
10' Path to Heritage Trail, No Sidewalk	5	☐	☐	☐	☐	☒	☒	☐
Eliminate 5' Sidewalk East Side Entire Project	6	☑	☐	☐	☐	☒	☒	☐
VE 4 + VE 6	7	☐	☐	☐	☐	☒	☒	☐
Eliminate 5' Sidewalk East Side, Except on Bridges	8	☐	☐	☐	☐	☒	☒	☐
Use Rural Typical in lieu of Suburban	9	☑	☐	☒	☒	☒	☒	☐

COMMENTS:

Tommy Barfield, P.E., District Secretary — 1/30/13 Date

Team Members

Name	Expertise	Phone Number
Keith Alan Hinson, P.E.	Team Leader	(850) 330-1547
Billy Best	Design	(850) 330-1715
Ray Hodges, P.E.	Construction	(850) 330-1283
Heather Bolton, E.I.	Construction	(850) 981-2802
Mike Proctor	Maintenance	(850) 981-2814
Brenda Whittington	Right-of-Way	(850) 330-1385
Alan Vann	Environment	(850) 330-1523
D.J. Barber, P.E.	Drainage	(850) 330-1441
Phillip Smith	Estimates	(850) 330-1500

Resources

Name	Affiliation	Expertise	Phone Number
Keith Shores, P.E.	FDOT	Structures	(850) 330-1449
Jimmy Miller	FDOT	Construction	(850) 330-1262
Hal Gore Jr., P.E.	FDOT	Construction	(850) 330-1713
Peggy Kelley	FDOT	PD&E	(850) 330-1517
Jessica Bloomfield, P.E.	Metric	Design	(850) 596-1526
Jim Kapinos, P.E.	FDOT	Drainage	(850) 330-1430
Ed Chadwell	FDOT	Railroad	(850) 330-1551
Steve Whittington	FDOT	Right-of-Way	(850) 330-1385
Hardy Smith	Atkins	Right-of-Way	(850) 638-2288
Scott Golden, P.E.	FDOT	Design	(850) 330-1492

Project Description

The new SR 87 Connector has two possible alternate routes at this stage of development. Therefore, both alternates were studied by the team.

Alternate 1 extends north from the US 90/SR 87S intersection crossing the Blackwater River in proximity of the existing eastern power easement crossings. Once across the river it will run parallel, or adjacent to the power easement, then connect with SR 87N in proximity of the southern split of SR 87N and SR 89 utilizing the Manning Lane right-of-way. This alternate is roughly 6.5 miles in length.

Alternate 2 extends north from the US 90/SR 87S intersection crossing the Blackwater River in proximity of the eastern most existing power easement crossing. Once across the river it will run slightly north of Alternate 1, and run adjacent to the Clear Water Creek environmental lands, where it then heads west to connect with SR 87N in proximity of the northern split of SR 87N and SR 89. This alternate is roughly 7.2 miles in length.

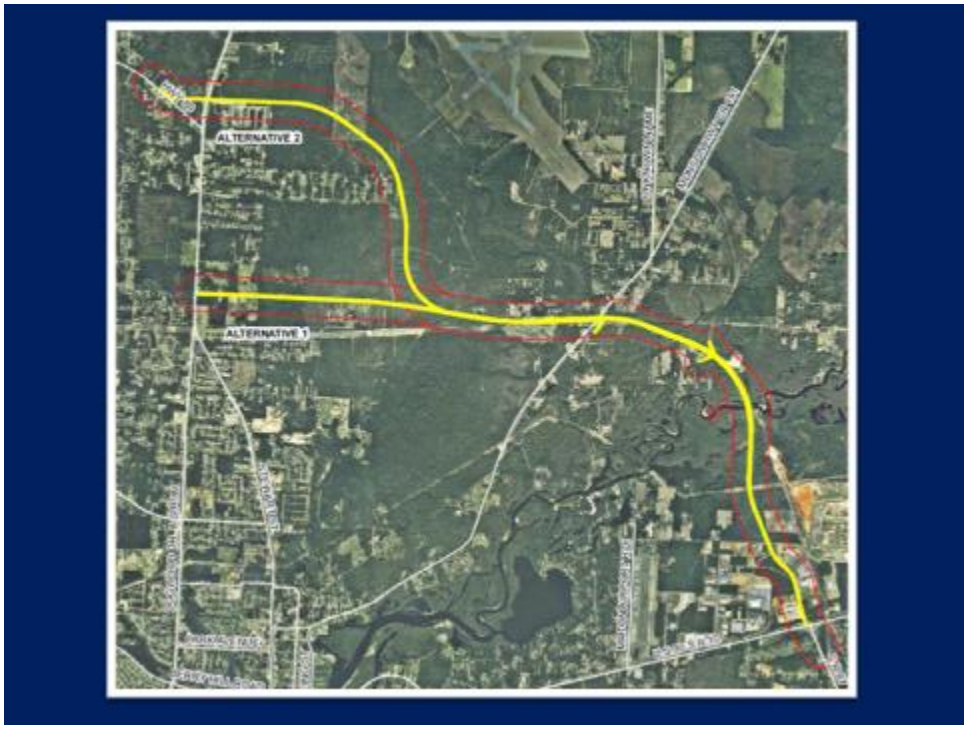

Description

It is anticipated that the new roadway will be a four lane divided highway. There will be urban and suburban sections as well as two bridges at the Blackwater River and Clear Creek.

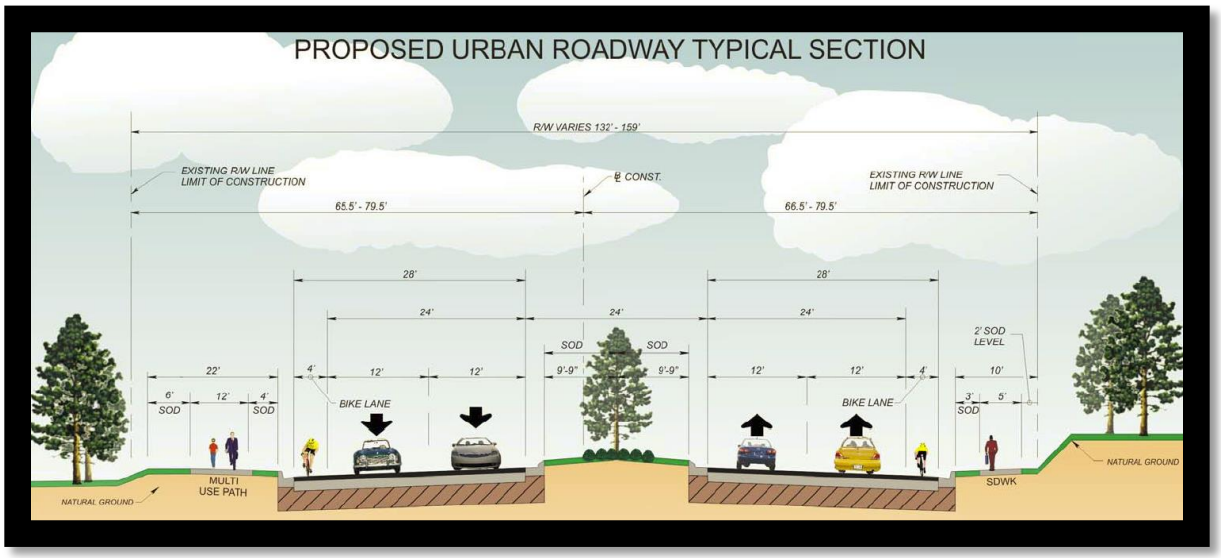

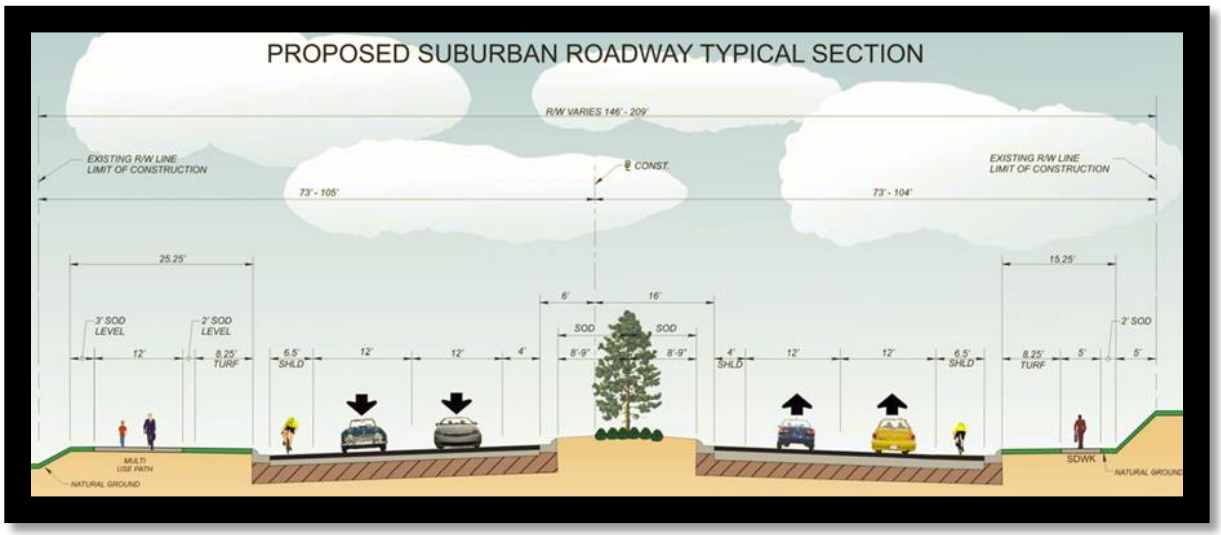

Description

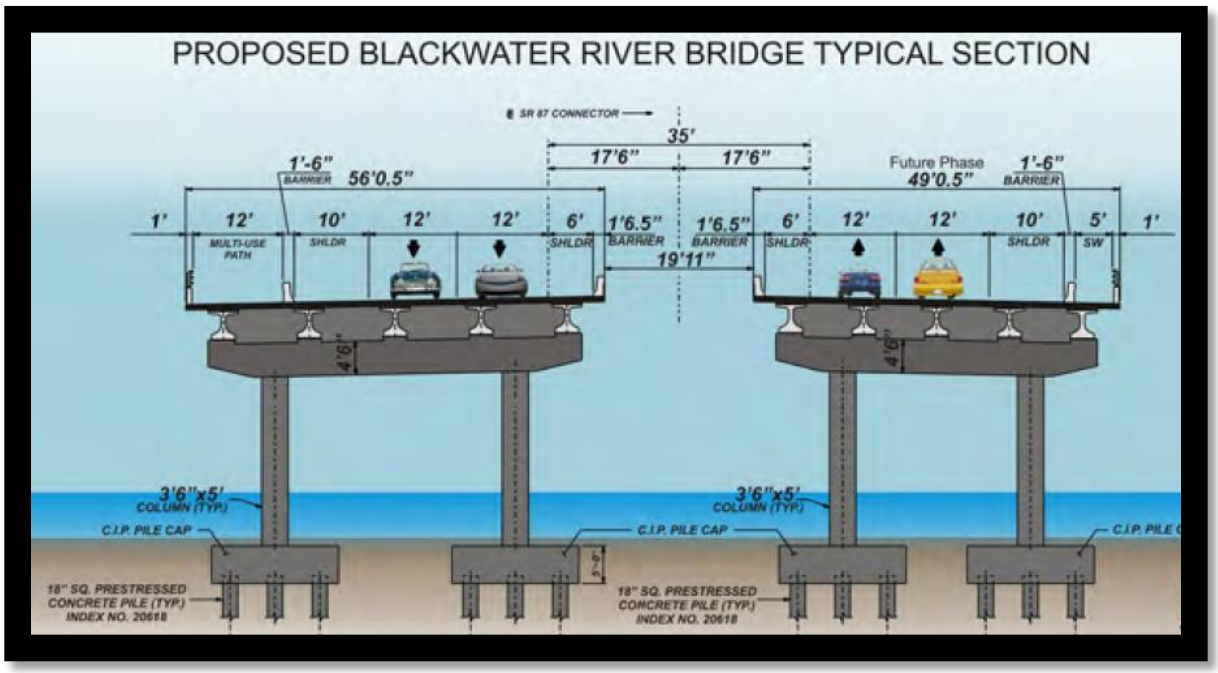

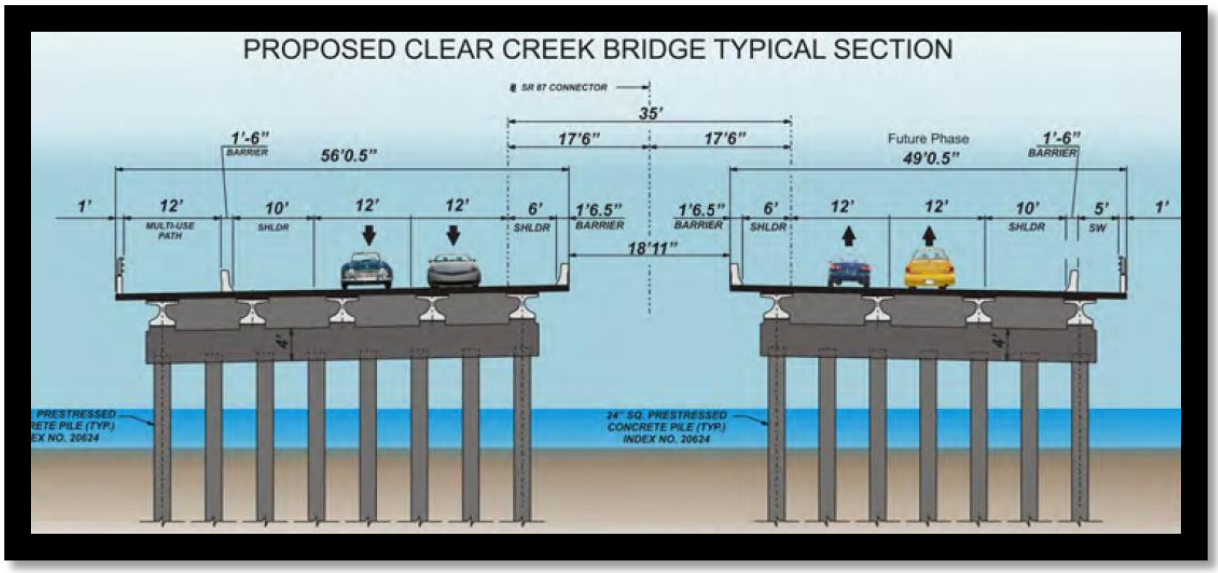

Value Engineering Methodology

The Value Engineering Team used the following 6 step job plan to conduct this analysis:

1. **Information Phase:** The team reviewed the design documents, verified the cost estimate and contacted resources to verify existing information.
2. **Function Analysis:** The team defined the project functions using a two word active verb measurable noun context and classified the functions as basic or secondary.
3. **Creative Phase:** The team used brainstorming to generate ideas that would perform the functions defined in the Function Analysis phase**.**
4. **Evaluation:** The team evaluated the ideas by consensus and determined which ideas to carry forward for development, which ideas would be presented as design suggestions and which ideas would be eliminated.
5. **Development:** Based on the evaluation, phase ideas carried forward were developed into VE recommendations or Design Observations. The development consisted of a description of the idea and a listing of the advantages and disadvantages of the proposed idea.
6. **Presentation:** The study concluded with a presentation to management.

Cost Model

Long range estimates were used for both alternates for identifying high cost items to determine focus areas for the team.

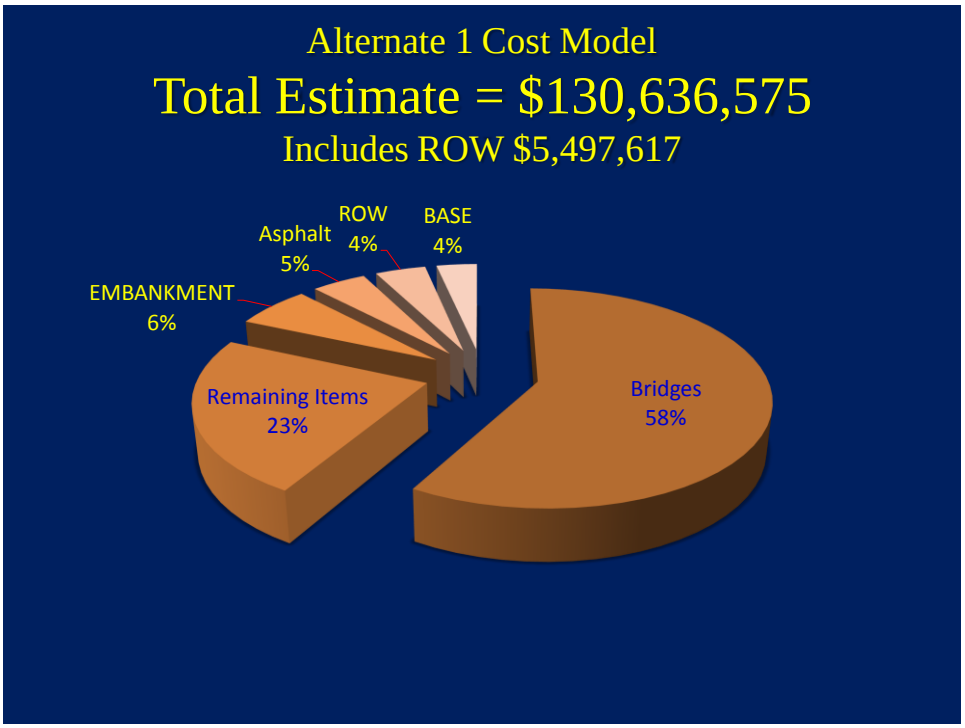

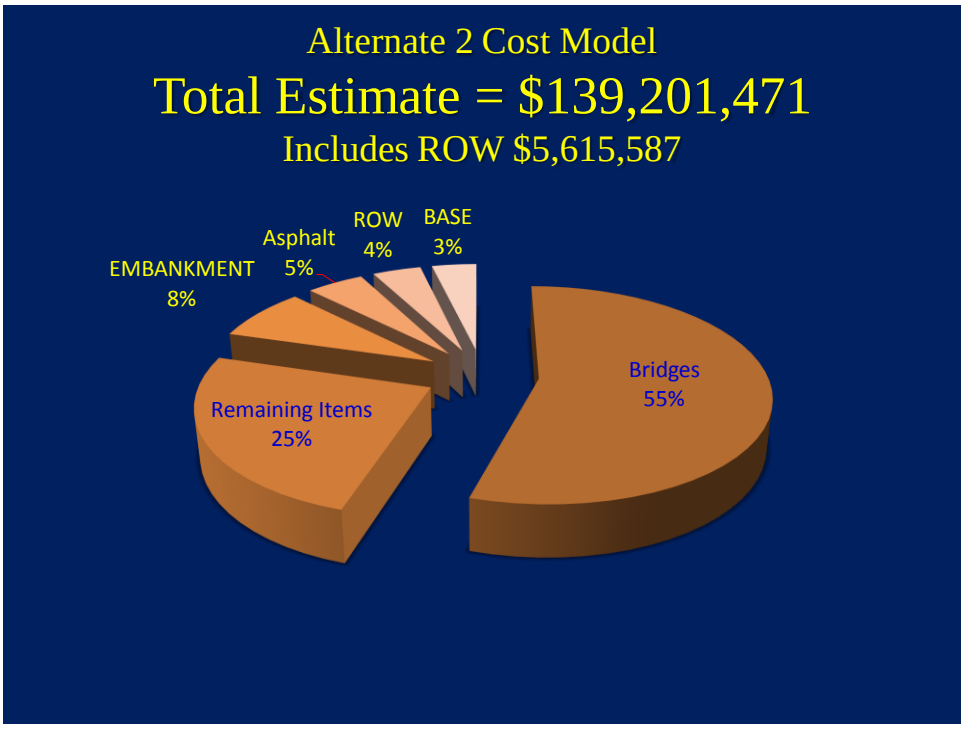

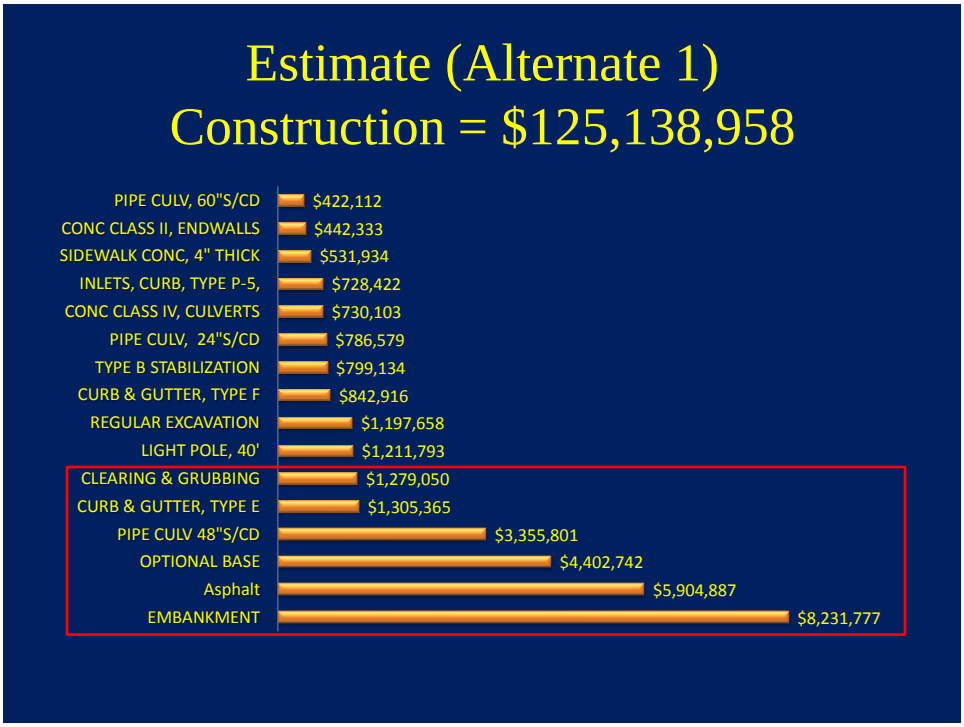
Estimate (Alternate 1)
Construction = $125,138,958
PIPE CULV, 60"S/CD $422,112
CONC CLASS II, ENDWALLS $442,333
SIDEWALK CONC, 4" THICK $531,934
INLETS, CURB, TYPE P-5, $728,422
CONC CLASS IV, CULVERTS $730,103
PIPE CULV, 24"S/CD $786,579
TYPE B STABILIZATION $799,134
CURB & GUTTER, TYPE F $842,916
REGULAR EXCAVATION $1,197,658
LIGHT POLE, 40' $1,211,793
CLEARING & GRUBBING $1,279,050
CURB & GUTTER, TYPE E $1,305,365
PIPE CULV 48"S/CD $3,355,801
OPTIONAL BASE $4,402,742
Asphalt $5,904,887
EMBANKMENT $8,231,777

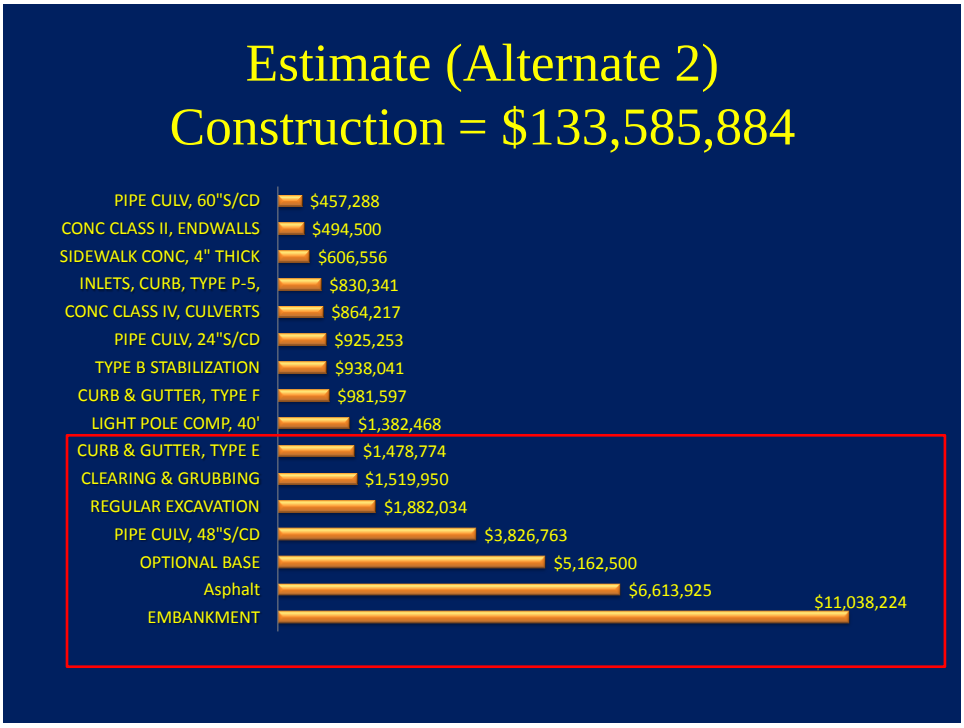
Estimate (Alternate 2)
Construction = $133,585,884
PIPE CULV, 60"S/CD $457,288
CONC CLASS II, ENDWALLS $494,500
SIDEWALK CONC, 4" THICK $606,556
INLETS, CURB, TYPE P-5, $830,341
CONC CLASS IV, CULVERTS $864,217
PIPE CULV, 24"S/CD $925,253
TYPE B STABILIZATION $938,041
CURB & GUTTER, TYPE F $981,597
LIGHT POLE COMP, 40' $1,382,468
CURB & GUTTER, TYPE E $1,478,774
CLEARING & GRUBBING $1,519,950
REGULAR EXCAVATION $1,882,034
PIPE CULV, 48"S/CD $3,826,763
OPTIONAL BASE $5,162,500
Asphalt $6,613,925
EMBANKMENT $11,038,224

Cost Models for both Alternate 1 and Alternate 2 are shown. The pie charts include Right-of-Way costs and bridge costs. The bars charts do not include Right-of-Way costs or bridge costs. After reviewing the Cost Models, the Value Engineering Team decided to focus on the following areas for potential savings:

- Bridges
- Embankment
- Asphalt
- Base
- Right-of-Way

Function Analysis

The team performed the function analysis phase preparing a list of functions by project and major components of the project. The functions were defined by the traditional verb/noun format and classified as to whether they were basic or secondary functions

Item	Verb	Noun	Basic	Secondary
Overall Project	Improve	Evacuation	B	
	Improve	Mobility	B	
	Improve	Multi-Modal		S
Bridges	Span	River	B	
	Span	Habitat		S
	Span	Heritage Trail	B	
	Span	Flood Way	B	
Right-of-Way	Provide	Alignment	B	
	Enhance	Safety		S
	Provide	Future Growth		S
	Provide	Treatment	B	
Embankment	Support	Road	B	
	Support	Path		S
Asphalt	Support	Traffic	B	
Base	Support	Roadway	B	

Speculation / Evaluation

The team brainstormed to generate the following ideas based on the defined functions and through team consensus determined whether to carry the idea forward for development, combine with another idea, eliminate the idea or change to a design observation.

Idea	Generated Ideas	Disposition
1	End Multi-Use Path at Heritage Trail, Add 5’ Sidewalk	Carry Forward
2	End Multi-Use Path at Heritage Trail, No Sidewalk	Carry Forward
3	Reduce Multi-Use Path Width from 12’ to 10’ Entire Project	Carry Forward
4	10’ Path to Heritage Trail, Add 5’ Sidewalk	Carry Forward
5	10’ Path to Heritage Trail, No Sidewalk	Carry Forward
6	Eliminate 5’ Sidewalk on east side	Carry Forward
7	Combine VE 4 & VE 6	Carry Forward
8	Consider Open drainage system	Design Observation
9	Include irrigation	Design Observation
10	Muck Issue	Design Observation
11	Right-of-Way	Design Observation
12	Bobby Brown Road, new entrance	Design Observation
13	Eliminate paving Pat Brown Road	Eliminate
14	Use existing road north of 90 for interim	Eliminate
15	Build interim roadway same slope	Eliminate
16	Urban section, 6’ sidewalk adjacent curb	Eliminate
17	Consider 5’ asphalt in lieu sidewalk	Eliminate
18	Bridge Length	Eliminate
19	Median Spacing Requirements	Eliminate

VE Idea 1

Description

Terminate the Multi-Use Path at the Blackwater Heritage Trail (Station 257+00) and construct 5 foot sidewalk for remainder of project.

Since the original intent of the multi-use path was to connect the old highway 1 brick road along highway 90 to the Blackwater Heritage Trail, this can be achieved by terminating the multi-use path at station 257+00. A new five foot sidewalk will be started at that location and continue to the end of the project at SR 87 north (station 455+15 for alternate 1). For Alternate 1, this will result in 19,635 feet reduction (455+15 – 257+00 - 180 feet for Clear Creek Bridge) of the following items in the multi-use trail: asphalt, base, stabilization, embankment, and sod. For Alternate 2, this will result in 24,620 feet reduction (505+00 – 257+00 - 180 feet for Clear Creek Bridge) of the same items mentioned for Alternate 1. The only items that will increase for both alternates are performance turf and sidewalk. The Clear Creek Bridge, which is180 feet in length, can have a reduced width of seven feet due to going from a 12 foot path to a 5 foot sidewalk.

Planned Detail vs. VE Idea Detail Station 257+00

Planned Detail

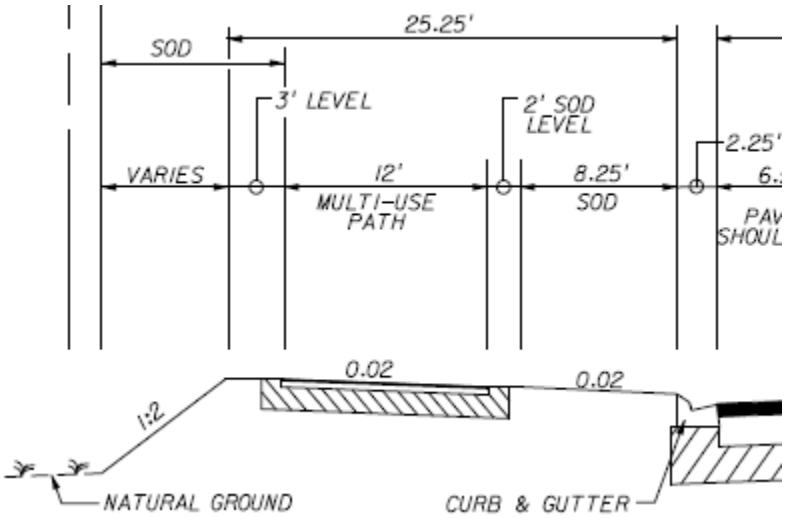

VE Idea Detail

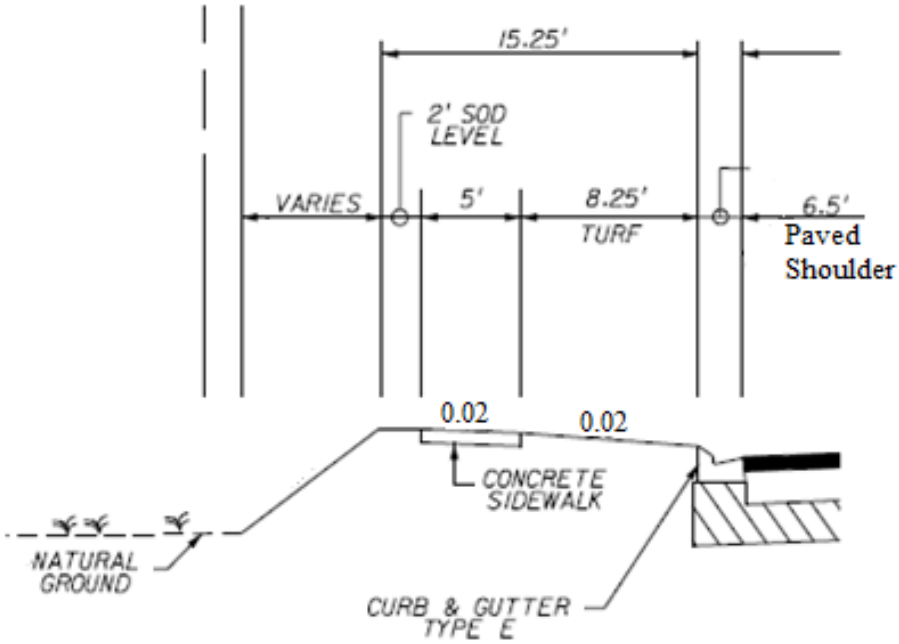

Planned Detail vs. VE Idea Detail Clear Creek Bridge

Clear Creek (Planned)

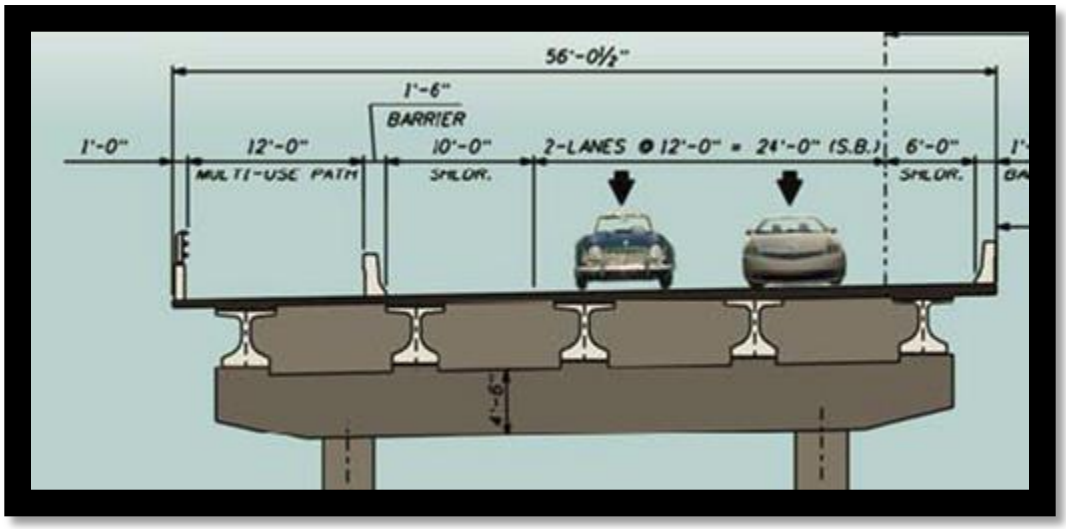

Clear Creek VE Idea Detail

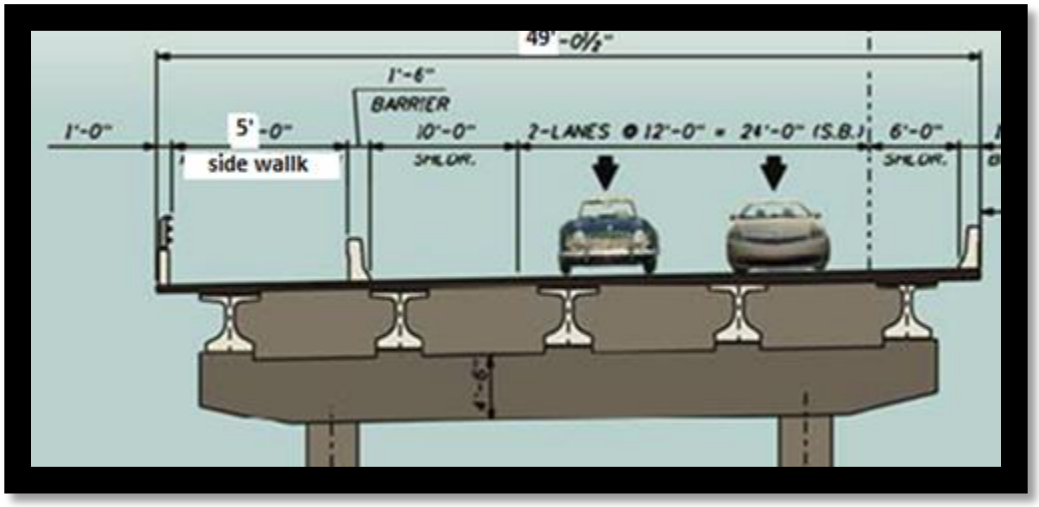

Calculations for Alternate 1

Reduction in Quantities for Alternate 1

Clear Creek Bridge 180 feet x 7 feet reduction = **1,260 SF**

Asphalt 1”= 110 lbs/SY x (1SY/ 9SF) x (1TN/2000 lbs) x 19,635 ft x 12 ft = **1,440 tons**

Base = 12ft + (2 x 4”)/12= (12.667ft x 19,635 ft)/9 SF/SY= **27,635 SY**

Stabilization = 12ft + (2 x 2’) = (16 ft x 19,635 ft) / 9 SF/SY = **34,907 SY**

Embankment= 25.25’-15.25’ = 10 ft (see typical section sheet 4)

(10ft x 4.5ft (avg. fill height) x 19,635 ft)/27CF/CY= **32,725 CY**

Sod (11.25 ft x 19,635 ft) / 9 SF/SY = **24,544 SY**

Increase in Quantities for Alternate 1

Performance Turf (8.25 ft x 19,635 ft) / 9 SF/SY= **17,999 SY**

Sidewalk (5ft x 19,635 ft) / 9 SF/SY = **10,908 SY**

Cost Comparison Alternate 1

SR 87 416748-3 Terminate Multi-Use Path at Heritage Trail add 5' Sidewalk
(ALT 1) **VALUE ENGINEERING IDEA No. 1**
COST COMPARISON SHEET

DESCRIPTION	UNITS	UNIT COST	Reduced QTY.	Reduced COST	Added QTY.	Added COST
Clear Creek Bridge	SF	$126.50	1260	$159,390		$0
Asphalt Multi Use Path	TN	$104.35	1440	$150,254		$0
Base for Path	SY	$7.60	27635	$210,027		$0
Stabilization for Path	SY	$2.27	34907	$79,238		$0
Embankment	CY	$3.96	32725	$129,591		$0
Sod	SY	$2.33	24544	$57,187		$0
Perf. Turf	SY	$0.75		$0	17999	$13,499
Sidewalk	SY	$26.96		$0	10908	$294,089
SUBTOTAL				**$785,687**		**$307,588**
MOBILIZATION (THIS IS SUB+CONTIN. X % =)		**5.0%**		$41,249		$16,148
MOT		**2.0%**		$15,714		$6,152
CONTINGENCIES		**5.0%**		$39,284		$15,379
CEI		**10.0%**		$88,193		$34,527
			-	$0		$0
GRAND TOTAL				**$970,127**		**$379,794**

POTENTIAL SAVINGS: $590,333

Calculations for Alternate 2

Reduction in Quantities for Alternate 2

Clear Creek Bridge (180 feet x 7 feet reduction)/9 SF/SY = **1,260 SY**

Asphalt 1”= 110 lbs/SY x (1SY/ 9SF) x (1TN/2000 lbs) x 24,620 ft x 12 ft =**1,805 tons**

Base = 12ft + (2 x 4”)/12= (12.667ft x 24,620 ft)/9 SF/SY= **34,651 SY**

Stabilization = 12ft + (2 x 2’) = (16 ft x 24,620 ft) / 9 SF/SY = **43,769 SY**

Embankment= 25.25’-15.25’ = 10 ft (see typical section sheet 4)

(10ft x 4.5ft (avg. fill height) x 24,620 ft)/27CF/CY= **41,033 CY**

Sod (11.25 ft x 24,620 ft) / 9 SF/SY = **30,775 SY**

Increase in Quantities for Alternate 2

Performance Turf (8.25 ft x 24,620 ft) / 9 SF/SY= **22,568 SY**

Sidewalk (5ft x 24,620 ft) / 9 SF/SY = **13,678 SY**

Cost Comparison Alternate 2

SR 87 416748-3 Terminate Multi-Use Path at Heritage Trail add 5' Sidewalk
(ALT 2) **VALUE ENGINEERING IDEA No. 1**
COST COMPARISON SHEET

DESCRIPTION	UNITS	UNIT COST	Reduced QTY.	Reduced COST	Added QTY.	Added COST
Clear Creek Bridge	SF	$126.50	1260	$159,390		$0
Asphalt Multi Use Path	TN	$104.35	1805	$188,400		$0
Base for Path	SY	$7.60	34651	$263,350		$0
Stabilization for Path	SY	$2.27	43769	$99,355		$0
Embankment	CY	$3.96	41033	$162,492		$0
Sod	SY	$2.33	30775	$71,706		$0
Perf. Turf	SY	$0.75		$0	22568	$16,926
Sidewalk	SY	$26.96		$0	13678	$368,753
SUBTOTAL				**$944,693**		**$385,679**
MOBILIZATION (THIS IS SUB+CONTIN. X % =)		**5.0%**		$49,596		$20,248
MOT		**2.0%**		$18,894		$7,714
CONTINGENCIES		**5.0%**		$47,235		$19,284
CEI		**10.0%**		$106,042		$43,292
			-	$0		$0
GRAND TOTAL				**$1,166,460**		**$476,217**

POTENTIAL SAVINGS: $690,243

VE Idea 2

Description

Terminate the Multi-Use Path at the Blackwater Heritage Trail (Station 257+00).

Since the original intent of the multi-use path was to connect the old highway 1 brick road along highway 90 to the Blackwater Heritage Trail, this can be achieved by terminating the multi-use path at station 257+00. The right-of-way will be purchased for possible addition of a multi-use path or sidewalk for the remainder of the project in the future. For Alternate 1, this will result in 19,635 feet reduction (455+15 – 257+00 - 180 feet for Clear Creek Bridge) of the following items in the multi-use trail: asphalt, base, stabilization, embankment, and sod. For Alternate 2, this will result in 24,620 feet reduction (505+00 – 257+00 - 180 feet for Clear Creek Bridge) of the same items mentioned for Alternate 1. The only item that will increase for both alternates is performance turf. The Clear Creek Bridge, which is180 feet in length, can have a reduced width of 13 feet due to eliminating the Multi-Use Path.

Planned Detail vs. VE Idea Detail Station 257+00

Planned Detail

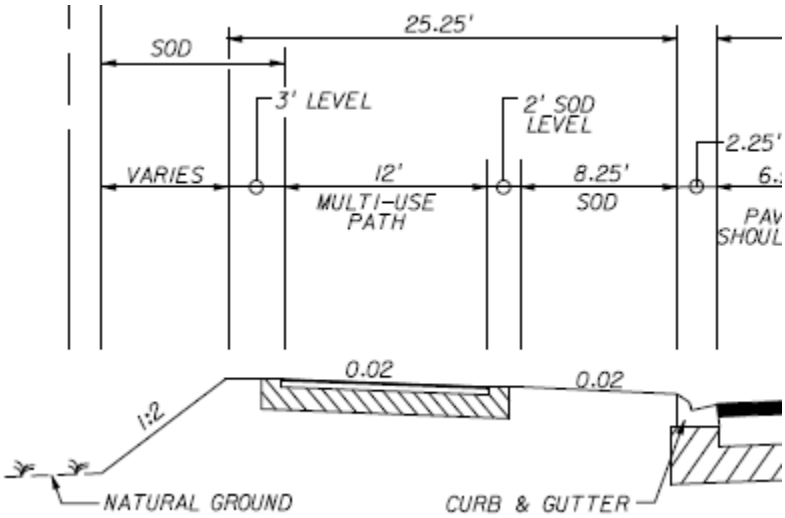

VE Idea Detail (Station 257+00 to SR 87 North)

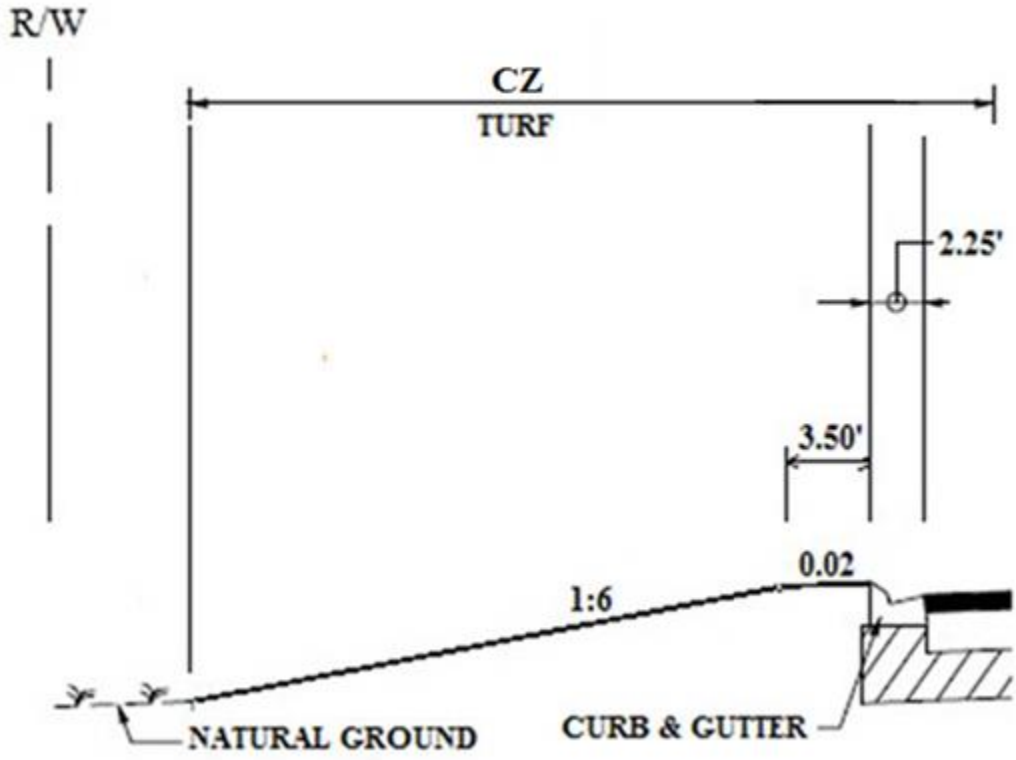

Planned Detail vs. VE Idea Detail Clear Creek Bridge

Planned Detail (Clear Creek Bridge)

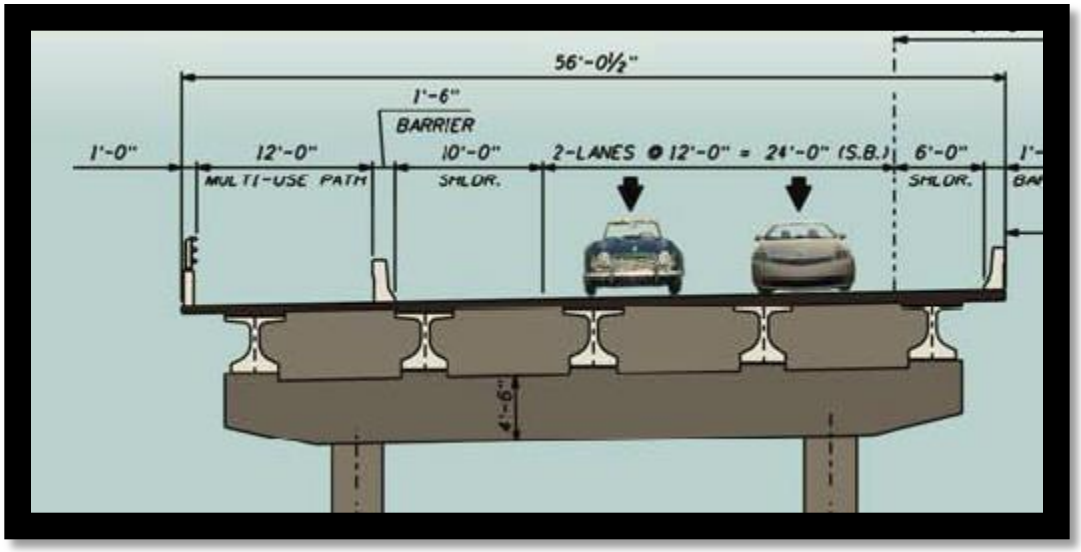

VE Idea Detail (Clear Creek Bridge)

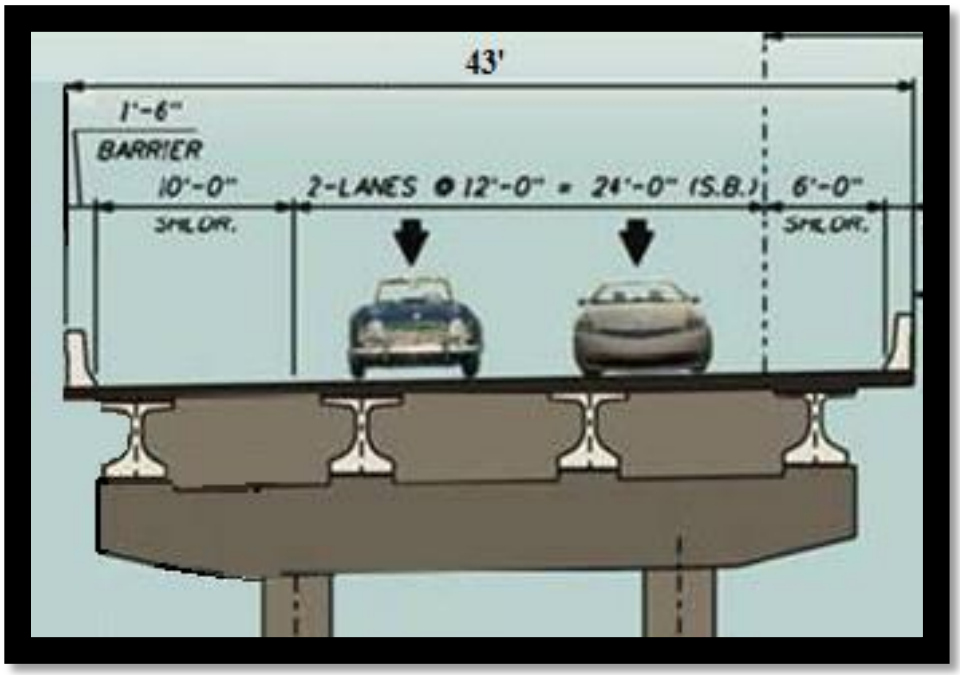

Calculations for Alternate 1

Reduction in Quantities for Alternate 1

Clear Creek Bridge 180 feet x 13 feet reduction = **2,340 SF**

Asphalt 1”= 110 lbs/SY x (1SY/ 9SF) x (1TN/2000 lbs) x 19,635 ft x 12 ft = **1,440 tons**

Base = 12 ft + (2 x 4”)/12= (12.667 ft x 19,635 ft)/9 SF/SY= **27,635 SY**

Stabilization = 12 ft + (2 x 2’) = (16 ft x 19,635 ft) / 9 SF/SY = **34,907 SY**

Embankment= [(71.2 SF-21.2SF) x 19,635 ft] / 27CF/CY = **36,361 CY**

Base Box = (12ft x 1/12ft) + (12.667ft x 4/12 ft) + (16ft x 1ft) = 21.2SF

Sod = 13.25 ft x 19,635 ft / 9 SF/SY = **28,907 SY**

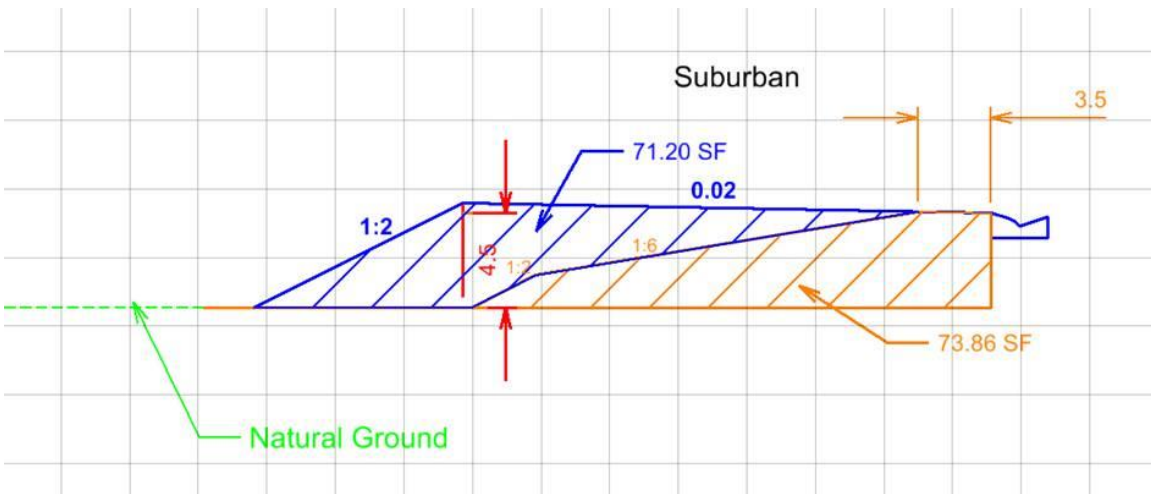

Increase in Quantities for Alternate 1

Performance Turf (21.75 ft x 19,635 ft) / 9 SF/SY= **47, 451 SY**

Cost Comparison for Alternate 1

SR 87 416748-3 Terminate Multi-Use Path at Heritage Trail
(ALT 1) **VALUE ENGINEERING IDEA No. 2**
COST COMPARISON SHEET

DESCRIPTION	UNITS	UNIT COST	Reduced QTY.	Reduced COST	Added QTY.	Added COST
Clear Creek Bridge	SF	$126.50	2340	$296,010		$0
Asphalt Multi Use Path	TN	$104.35	1440	$150,254		$0
Base for Path	SY	$7.60	27635	$210,027		$0
Stabilization for Path	SY	$2.27	34907	$79,238		$0
Embankment	CY	$3.96	36361	$143,990		$0
Sod	SY	$2.33	28907	$67,354		$0
Perf. Turf	SY	$0.75		$0	47451	$35,588
SUBTOTAL				**$946,873**		**$35,588**
MOBILIZATION (THIS IS SUB+CONTIN. X % =)		**5.0%**		$49,711		$1,868
MOT		**2.0%**		$18,937		$712
CONTINGENCIES		**5.0%**		$47,344		$1,779
CEI		**10.0%**		$106,286		$3,995
			-	$0		$0
GRAND TOTAL				**$1,169,151**		**$43,943**

POTENTIAL SAVINGS: $1,125,208

Calculations for Alternate 2

Reduction in Quantities for Alternate 2

Clear Creek Bridge 180 feet x 13 feet reduction = **2,340 SF**

Asphalt 1”= 110 lbs/SY x (1SY/ 9SF) x (1TN/2000 lbs) x 24,620 ft x 12 ft = **1,805 tons**

Base = 12ft + (2 x 4”)/12= (12.667ft x 24,620 ft)/9 SF/SY= **34,651 SY**

Stabilization = 12ft + (2 x 2’) = (16 ft x 24,620 ft) / 9 SF/SY = **43,769 SY**

Embankment= [(71.2 SF-21.2SF) x 24,620 ft] / 27CF/CY = **45,593 CY**

Base Box = (12ft x 1/12ft) + (12.667ft x 4/12 ft) + (16ft x 1ft) = 21.2SF

Sod = 13.25 ft x 24,620 ft / 9 SF/SY = **36,246 SY**

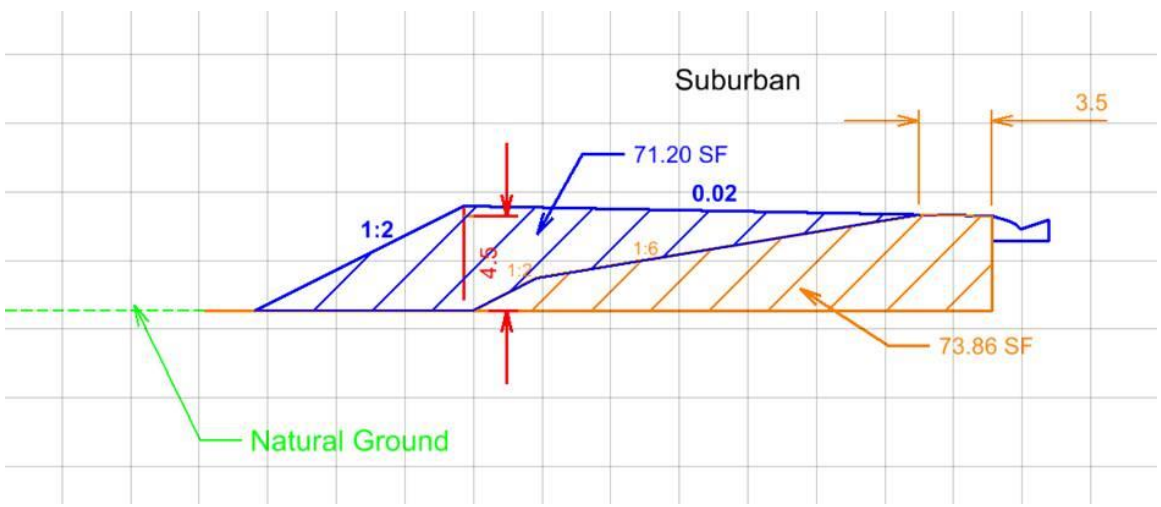

Increase in Quantities for Alternate 1

Performance Turf (21.75 ft x 24,620 ft) / 9 SF/SY= **59,498 SY**

Cost Comparison for Alternate 2

SR 87 416748-3 Terminate Multi-Use Path at Heritage Trail *(ALT 2)* **VALUE ENGINEERING IDEA No. 2** **COST COMPARISON SHEET**						
DESCRIPTION	**UNITS**	**UNIT COST**	**Reduced QTY.**	**Reduced COST**	**Added QTY.**	**Added COST**
Clear Creek Bridge	SF	$126.50	2340	$296,010		$0
Asphalt Multi Use Path	TN	$104.35	1805	$188,400		$0
Base for Path	SY	$7.60	34651	$263,350		$0
Stabilization for Path	SY	$2.27	43769	$99,355		$0
Embankment	CY	$3.96	45593	$180,547		$0
Sod	SY	$2.33	36246	$84,453		$0
Perf. Turf	SY	$0.75		$0	59498	$44,624
SUBTOTAL				**$1,112,116**		**$44,624**
MOBILIZATION (THIS IS SUB+CONTIN. X % =)		**5.0%**		$58,386		$2,343
MOT		**2.0%**		$22,242		$892
CONTINGENCIES		**5.0%**		$55,606		$2,231
CEI		**10.0%**		$124,835		$5,009
			-	$0		$0
GRAND TOTAL				**$1,373,185**		**$55,099**
POTENTIAL SAVINGS:				**$1,318,086**		

VE Idea 3

Description

Reduce the width of the Multi-Use Path from 12 feet to 10 feet for the entire length of the project. The Plans Preparation Manual allows a 10 foot Multi-Use Path in lieu of the planned 12 foot path. This will reduce quantities for embankment, stabilization, base, asphalt, and sod. This will affect both urban and suburban typical sections and reduce the width of both bridges.

8.6.2 Widths

The appropriate paved width for a shared use path is dependent upon context, volume and mix of users. Typically, widths range from 10-14 feet, with the wider values applicable to areas with high use and/or a wider variety of users (bicyclists, pedestrians, joggers, and skaters). The need to provide for larger emergency or maintenance vehicles or manage steep grades can also affect appropriate width. The minimum width for a two-directional shared use path is 10 feet. ***FHWA's Shared Use Path Level of Service Calculator*** may be used as a guide in determining when a width greater than the minimum might be needed.

At locations where the path narrows from the typical width warning signs or pavement markings in conformance with the MUTCD should be used.

TRAIL WIDTH

The findings of this study provide strong support for the standard trail width guidance provided in the AASHTO *Guide for the Development of Bicycle Facilities*.[2] Trails having 2.4-m (8.0-ft) width, which AASHTO recommends only in "rare instances," were found to have poor LOS, except at very low volumes or with user mixes that included few pedestrians and runners. The findings of this research support AASHTO's minimum "recommended paved width for a two-directional shared-use path of [3.0 m] ten feet." *

Planned Detail vs. VE Idea Detail (Urban)

Planned Detail (Urban Section)

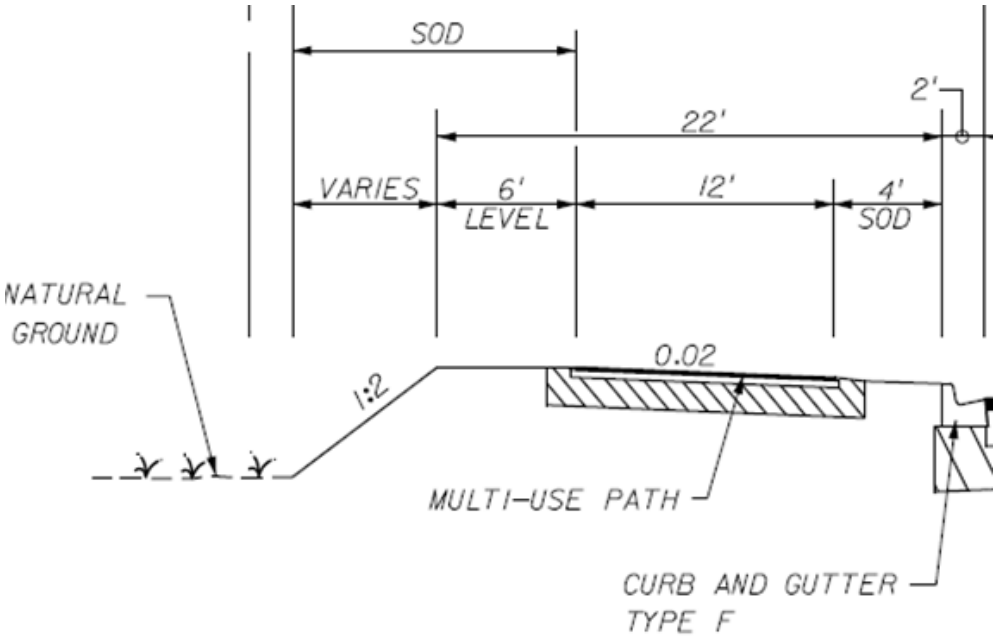

VE Idea Detail (Urban Section)

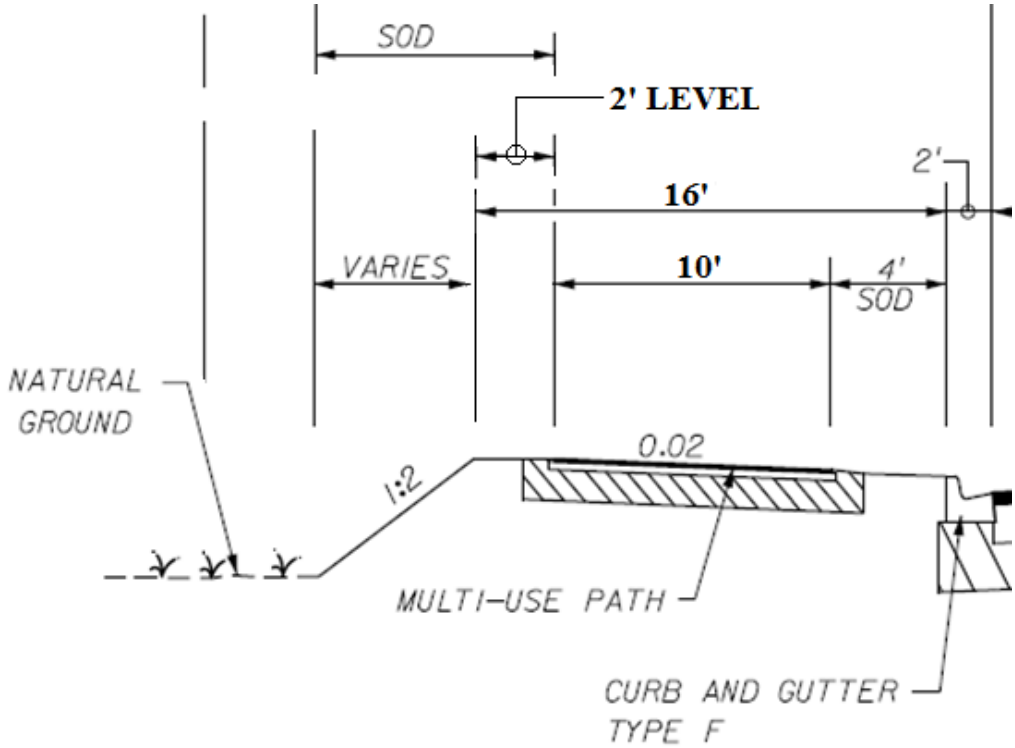

Planned Detail vs. VE Idea Detail (Suburban)

Planned Detail (Suburban Section)

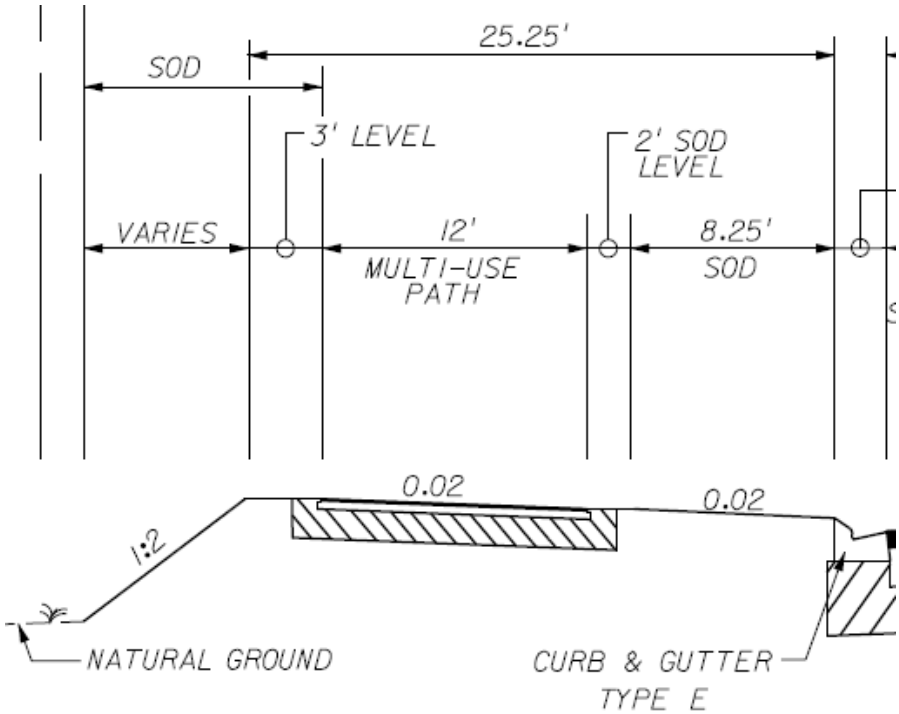

VE Idea Detail (Suburban Section)

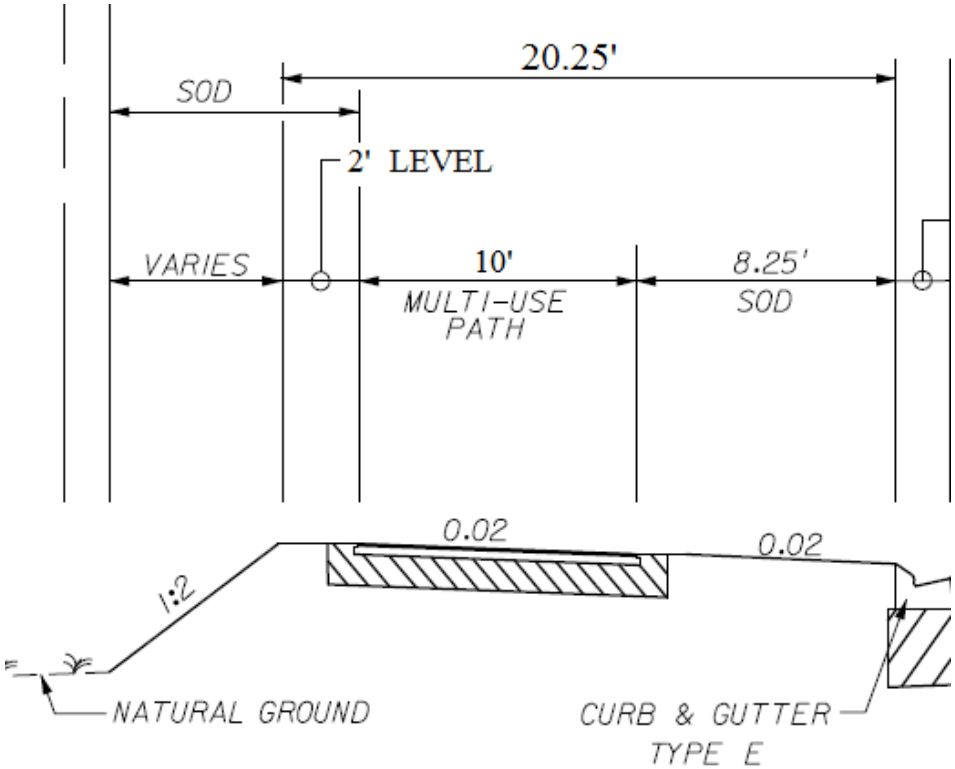

Planned Detail vs. VE Idea Detail (Bridges)

Planned Detail (Blackwater & Clear Creek Bridges)

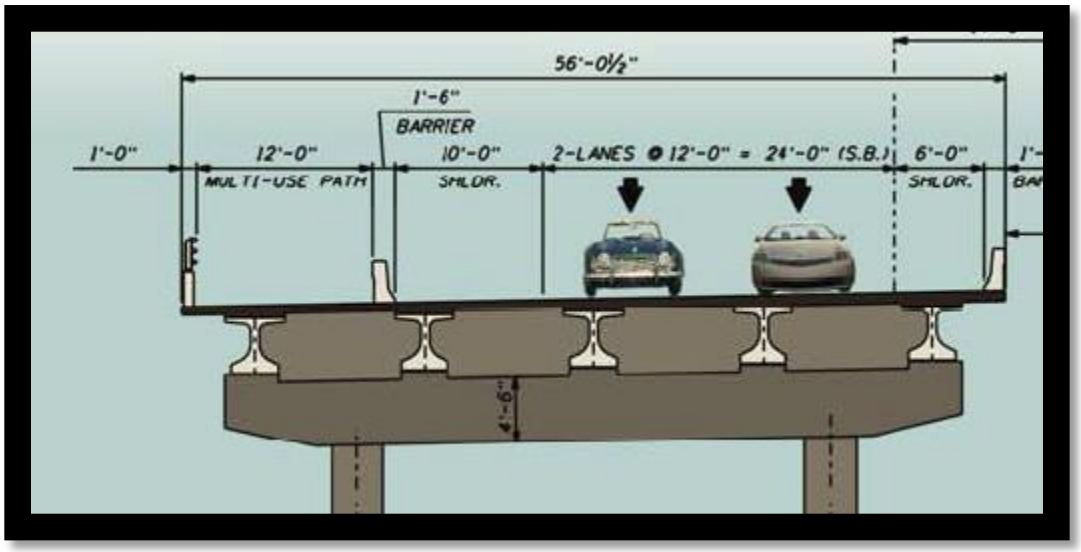

VE Idea Detail (Blackwater & Clear Creek Bridges)

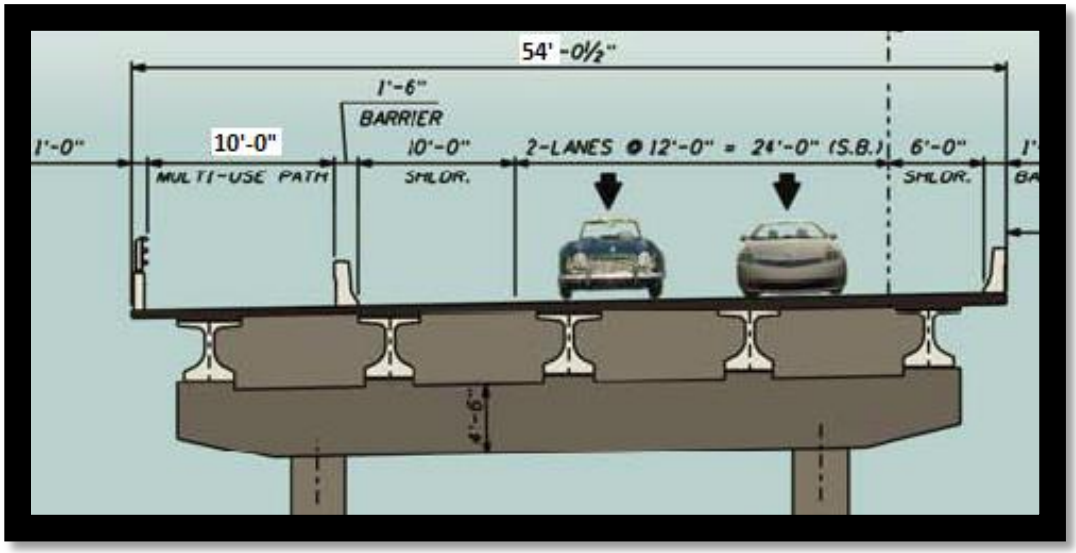

Calculations for Alternate 1

Reduction in Quantities for Alternate 1 Urban Section

Blackwater Creek (5560 feet x 2 feet reduction) = **11,120 SF**

Asphalt 1”= 110 lbs/SY x (1SY/ 9SF) x (1TN/2000 lbs) x 11,786 ft x 2 ft = **144 tons**

Base = (2ft x 11786 ft)/9 SF/SY= **2,619 SY**

Stabilization = (2 ft x 11,786 ft) / 9 SF/SY = **2619 SY**

Embankment= 22.00’-16.00’ = 6 ft (see typical section sheet 4)

(6ft x 4.5ft (avg. fill height) x 11,786 ft)/27CF/CY= **11,786 CY**

Sod (4 ft x 11,786 ft) / 9 SF/SY = **5238 SY**

Reduction in Quantities for Alternate 1 Suburban Section

Clear Creek Bridge (180 feet x 2 feet reduction) = **360 SF**

Asphalt 1”= 110 lbs/SY x (1SY/ 9SF) x (1TN/2000 lbs) x 17,989 ft x 2 ft = **220 tons**

Base = (2ft x 17,989 ft)/9 SF/SY= **3998 SY**

Stabilization = (2 ft x 17,989 ft) / 9 SF/SY = **3998 SY**

Embankment= 25.25’-15.25’ = 5 ft (see typical section sheet 4)

(5ft x 4.5ft (avg. fill height) x 11,786 ft)/27CF/CY= **14,991 CY**

Sod (3 ft **x** 11,776 ft) / 9 SF/SY = **5996 SY**

Cost Comparison Alternate 1 (Urban)

SR 87 416748-3
(ALT. 1 URBAN)10' Path **VALUE ENGINEERING IDEA No. 3**
COST COMPARISON SHEET

DESCRIPTION	UNITS	UNIT COST	Reduced QTY.	Reduced COST	V.E. QTY.	V.E. COST
Apshalt	SY	$104.35	144	$15,032		$0
Base	SY	$7.60	2619	$19,905		$0
Embankment	CY	$3.96	11786	$46,673		$0
Blackwater Bridge Savings	SF	$126.50	11120	$1,406,680		$0
Stabilization	SY	$2.27	2619	$5,945		$0
Sod	SY	$2.33	5238	$12,205		$0
				$0		$0
SUBTOTAL				**$1,506,440**		**$0**
MOBILIZATION (THIS IS SUB+CONTIN. X % =)		**5.0%**		$79,088		$0
MOT		**2.0%**		$30,129		$0
CONTINGENCIES		**5.0%**		$75,322		$0
CEI		**10.0%**		$169,098		$0
			-	$0		$0
GRAND TOTAL				**$1,860,077**		**$0**

POTENTIAL SAVINGS: $1,860,077

Cost Comparison Alternate 1 (Suburban)

SR 87 416748-3
(ALT. 1 SUBURBAN) 10' Path **VALUE ENGINEERING IDEA No. 3**
COST COMPARISON SHEET

DESCRIPTION	UNITS	UNIT COST	Reduced QTY.	Reduced COST	V.E. QTY.	V.E. COST
Apshalt	SY	$104.35	220	$22,943		$0
Base	SY	$7.60	3998	$30,381		$0
Embankment	CY	$3.96	14991	$59,364		$0
Clearcreek Bridge Savings	SF	$126.50	360	$45,540		$0
Stabilization	SY	$2.27	3998	$9,074		$0
Sod	SY	$2.33	5996	$13,971		$0
				$0		$0
SUBTOTAL				**$181,274**		**$0**
MOBILIZATION (THIS IS SUB+CONTIN. X % =)		**5.0%**		$9,517		$0
MOT		**2.0%**		$3,625		$0
CONTINGENCIES		**5.0%**		$9,064		$0
CEI		**10.0%**		$20,348		$0
			-	$0		$0
GRAND TOTAL				**$223,828**		**$0**

POTENTIAL SAVINGS: $223,828

Calculations for Alternate 2

Reduction in Quantities for Alternate 2 Urban Section

Blackwater Creek (5560 feet x 2 feet reduction) = **11,120 SF**

Asphalt 1”= 110 lbs/SY x (1SY/ 9SF) x (1TN/2000 lbs) x 13,920 ft x 2 ft = **170 tons**

Base = (2ft x 13,920 ft)/9 SF/SY= **3,093 SY**

Stabilization = (2 ft x 13,920 ft) / 9 SF/SY = **3,093 SY**

Embankment= 22.00’-16.00’ = 6 ft (see typical section sheet 4)

(6ft x 4.5ft (avg. fill height) x 13,920 ft)/27CF/CY= **13,920 CY**

Sod (4 ft x 13,920 ft) / 9 SF/SY = **6,187 SY**

Reduction in Quantities for Alternate 2 Suburban Section

Clear Creek Bridge (180 feet x 2 feet reduction) = **360 SF**

Asphalt 1”= 110 lbs/SY x (1SY/ 9SF) x (1TN/2000 lbs) x 20,904 ft x 2 ft = **255 tons**

Base = (2ft x 20,904 ft)/9 SF/SY= **4,645 SY**

Stabilization = (2 ft x 20,904 ft) / 9 SF/SY = **4,645 SY**

Embankment= 25.25’-15.25’ = 5 ft (see typical section sheet 4)

(5ft x 4.5ft (avg. fill height) x 20,904 ft)/27CF/CY= **17,420 CY**

Sod (4 ft x 20,904 ft) / 9 SF/SY = **6968 SY**

Cost Comparison Alternate 2 (Urban)

SR 87 416748-3
(ALT. 2 URBAN) 10' Path **VALUE ENGINEERING IDEA No. 3**
COST COMPARISON SHEET

DESCRIPTION	UNITS	UNIT COST	Reduced QTY.	Reduced COST	V.E. QTY.	V.E. COST
Apshalt	SY	$104.35	170	$17,753		$0
Base	SY	$7.60	3093	$23,509		$0
Embankment	CY	$3.96	13920	$55,123		$0
Blackwater Bridge Savings	SF	$126.50	11120	$1,406,680		$0
Stabilization	SY	$2.27	3093	$7,022		$0
Sod	SY	$2.33	6187	$14,415		$0
				$0		$0
SUBTOTAL				**$1,524,503**		**$0**
MOBILIZATION (THIS IS SUB+CONTIN. X % =)		**5.0%**		$80,036		$0
MOT		**2.0%**		$30,490		$0
CONTINGENCIES		**5.0%**		$76,225		$0
CEI		**10.0%**		$171,125		$0
			-	$0		$0
GRAND TOTAL				**$1,882,380**		**$0**

POTENTIAL SAVINGS: $1,882,380

Cost Comparison Alternate 2 (Suburban)

SR 87 416748-3 *(ALT. 2 SUBURBAN)10' Path* **VALUE ENGINEERING IDEA No. 3** **COST COMPARISON SHEET**						
DESCRIPTION	**UNITS**	**UNIT COST**	**Reduced QTY.**	**Reduced COST**	**V.E. QTY.**	**V.E. COST**
Apshalt	SY	$104.35	255	$26,661		$0
Base	SY	$7.60	4645	$35,305		$0
Embankment	CY	$3.96	17420	$68,983		$0
Clearcreek Bridge Savings	SF	$126.50	360	$45,540		$0
Stabilization	SY	$2.27	4645	$10,545		$0
Sod	SY	$2.33	6968	$16,235		$0
				$0		$0
SUBTOTAL				**$203,269**		**$0**
MOBILIZATION (THIS IS SUB+CONTIN. X % =)		**5.0%**		$10,672		$0
MOT		**2.0%**		$4,065		$0
CONTINGENCIES		**5.0%**		$10,163		$0
CEI		**10.0%**		$22,817		$0
			-	$0		$0
GRAND TOTAL				**$250,986**		**$0**
POTENTIAL SAVINGS:				**$250,986**		

VE Idea 4

Description

Reduce the width of the Multi-Use Path from 12 feet to 10 feet from the beginning of the project up to station 257+00. Construct 5 foot sidewalk in lieu of the Multi-Use Path for the remainder of the project.

Since the original intent of the multi-use path was to connect the old highway 1 brick road along highway 90 to the Blackwater Heritage Trail, this can be achieved by terminating the multi-use path at station 257+00. A new five foot sidewalk will be started at that location and continue to the end of the project at SR 87 north (station 455+15 for alternate 1). For Alternate 1, this will result in 19,635 feet reduction (455+15 – 257+00 - 180 feet for Clear Creek Bridge) of the following items in the multi-use trail: asphalt, base, stabilization, embankment, and sod. For Alternate 2, this will result in 24,620 feet reduction (505+00 – 257+00 - 180 feet for Clear Creek Bridge) of the same items mentioned for Alternate 1. The only items that will increase for both alternates are performance turf and sidewalk. The Clear Creek Bridge, which is180 feet in length, can have a reduced width of seven feet due to going from a 12 foot path to a 5 foot sidewalk.

The Plans Preparation Manual allows a 10 foot Multi-Use Path in lieu of the planned 12 foot path. The reduction in the width of the Multi-Use Path will result in additional reductions in quantities for asphalt, base, stabilization, embankment, and sod from the beginning of the project up to station 257+00.

Planned Detail vs. VE Idea Detail (Urban)

Planned Detail (Urban Section)

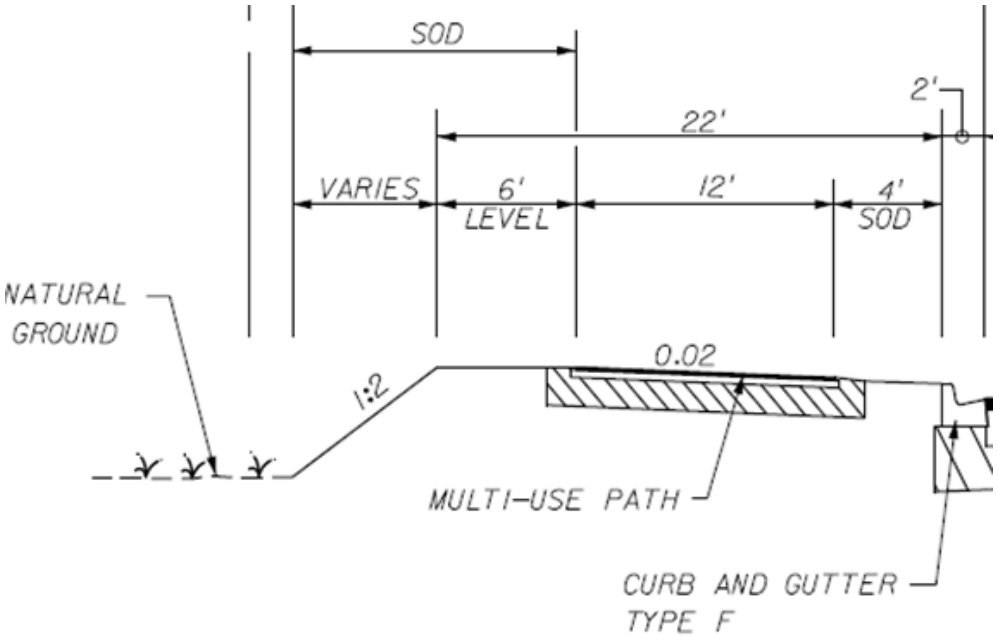

VE Idea Detail (Urban Section)

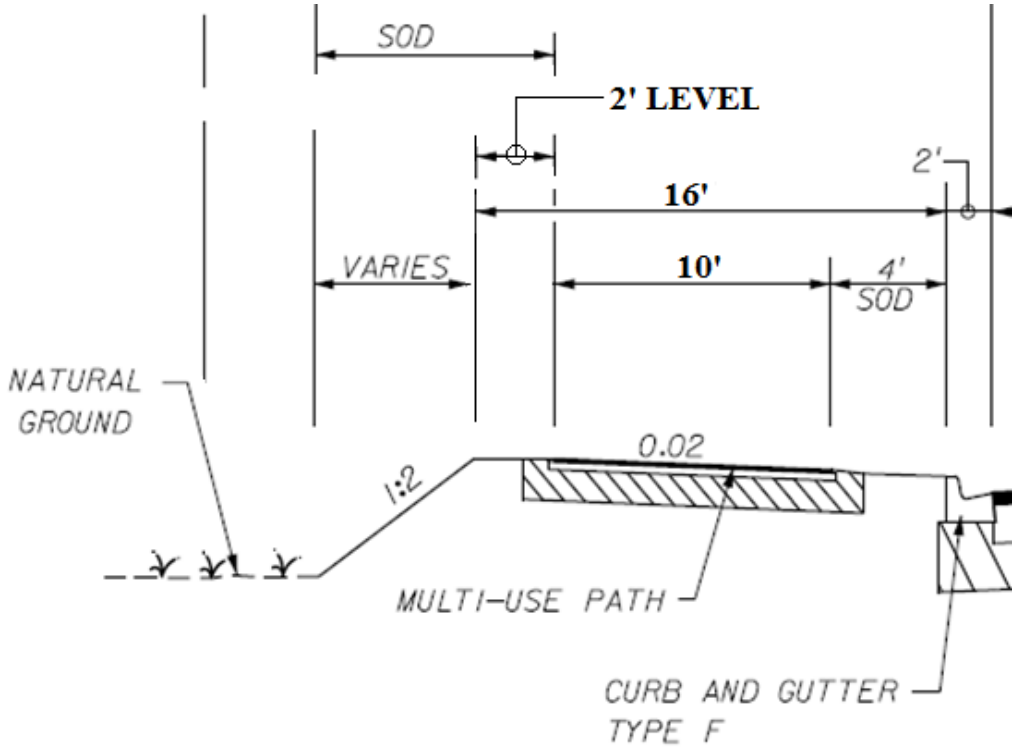

Planned Detail vs. VE Idea Detail (Suburban)

Planned Detail (Suburban Section)

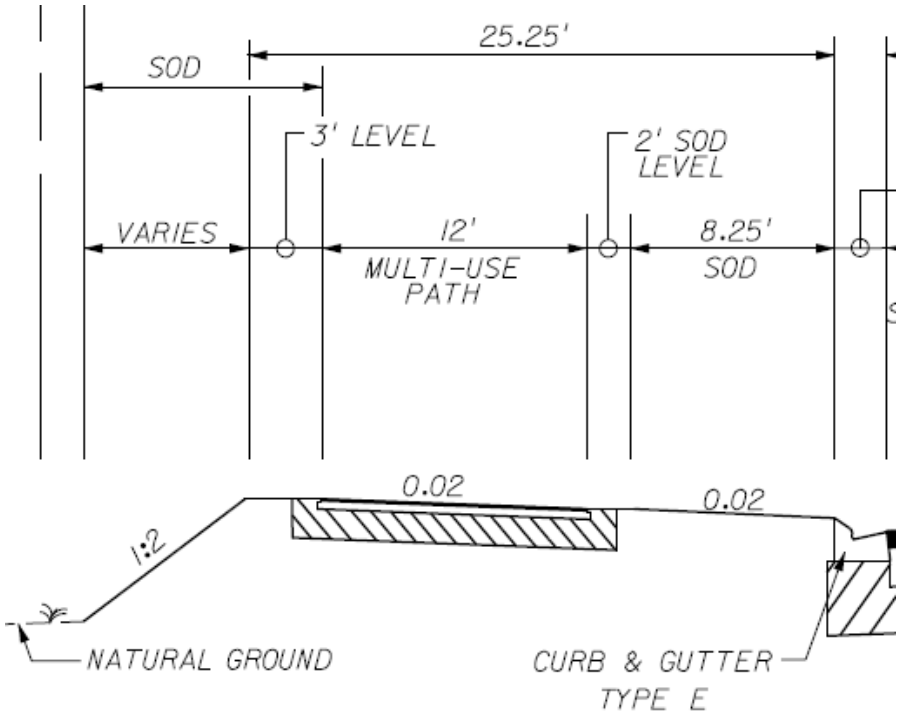

VE Idea Detail (Suburban Section)

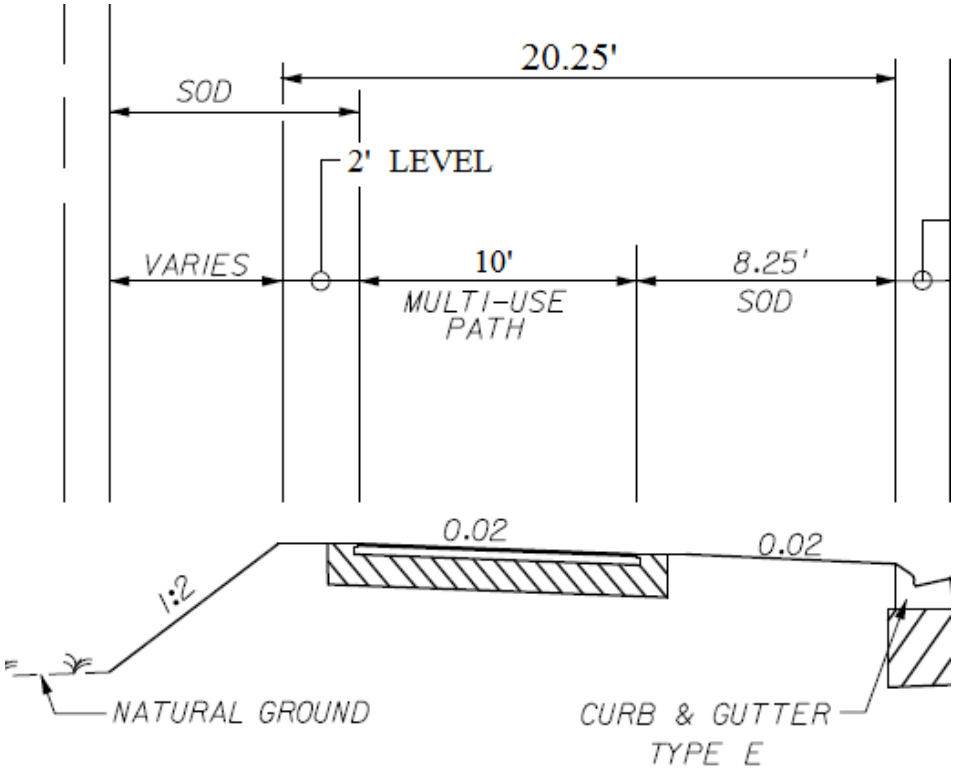

Planned Detail vs. VE Idea Detail (Blackwater Bridge)

Planned Detail Blackwater Bridge

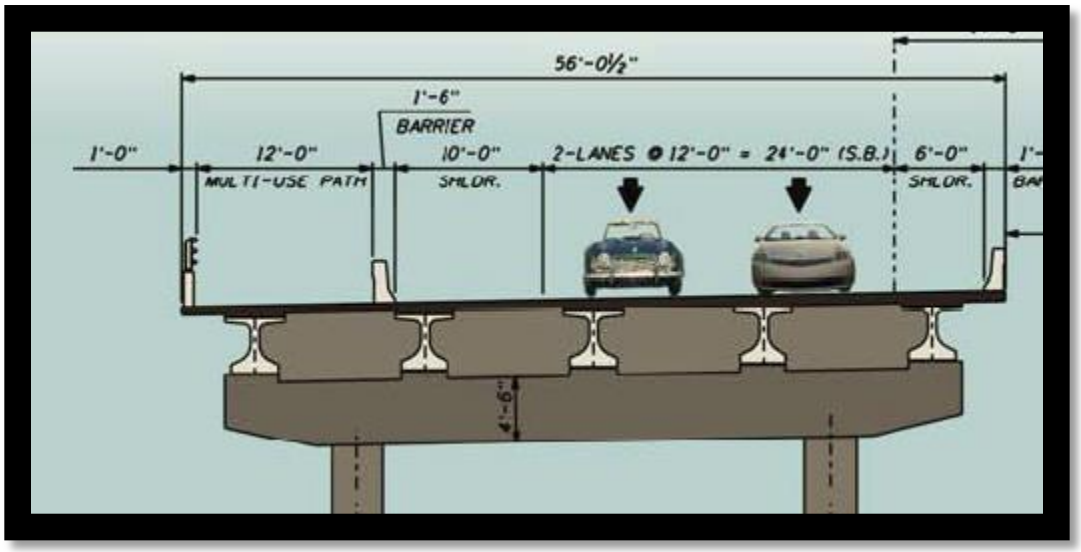

VE Idea Detail Blackwater Bridge

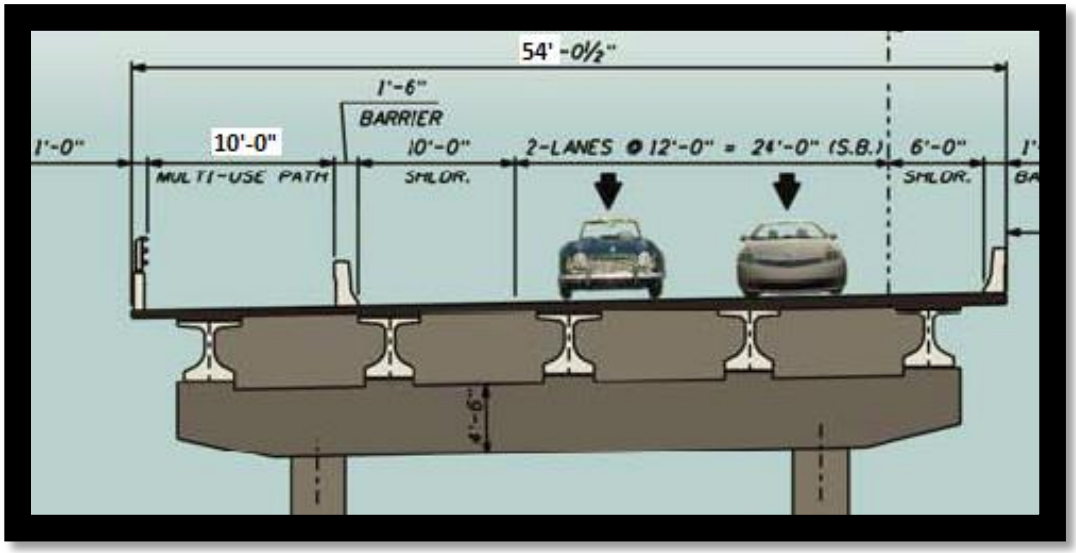

Planned Detail vs. VE Idea Detail Station 257+00

Planned Detail

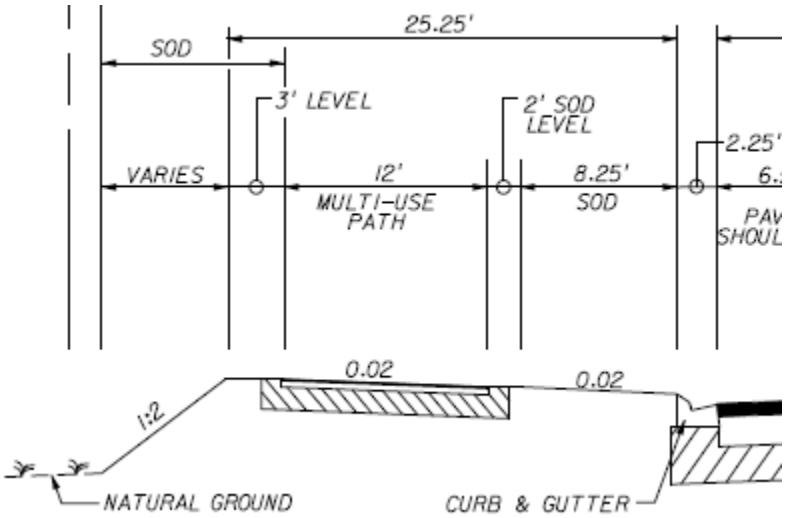

VE Idea Detail

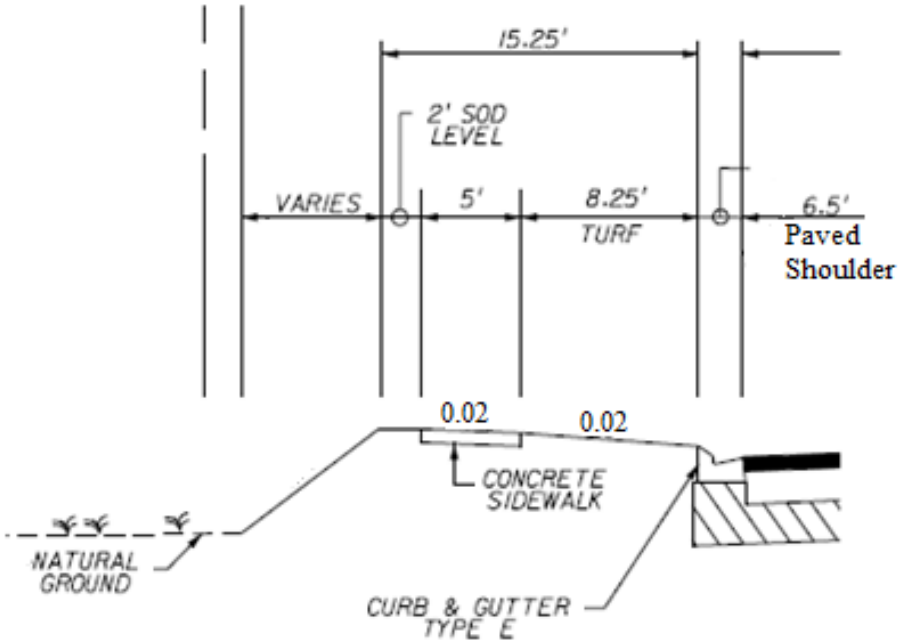

Planned Detail vs. VE Idea Detail Clear Creek Bridge

Planned Detail Clear Creek Bridge

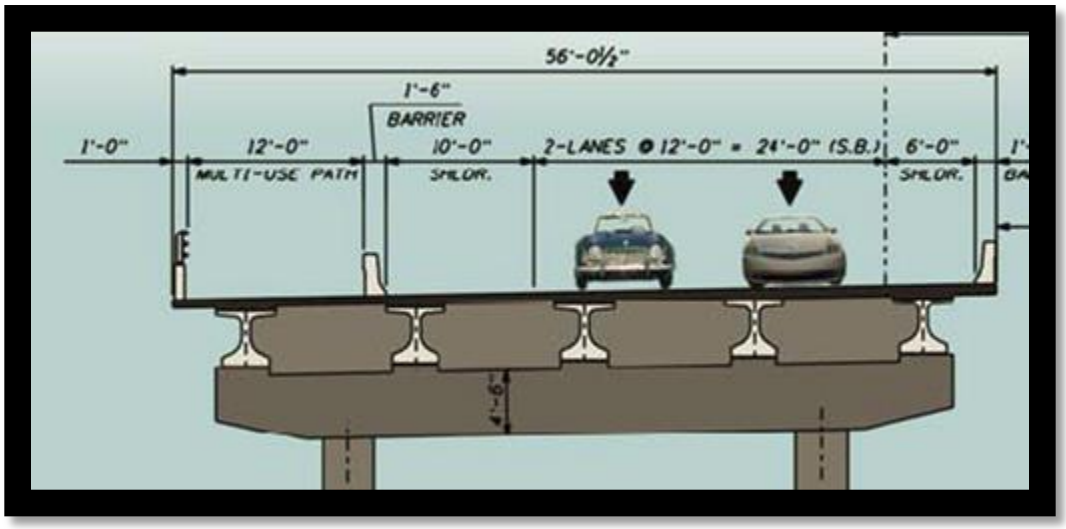

VE Detail Clear Creek Bridge

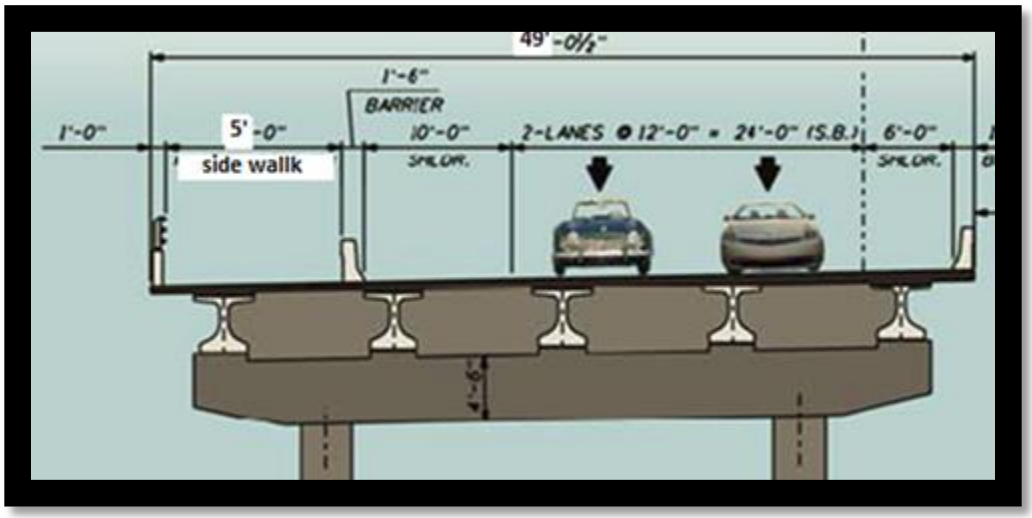

Calculations for Alternate 1 (Urban)

Reduction in Quantities for Alt. 1 Urban Section

Blackwater Creek (5560 feet x 2 feet reduction) = **11,120 SF**

Asphalt 1”= 110 lbs/SY x (1SY/ 9SF) x (1TN/2000 lbs) x 9,800 ft x 2 ft = **120 tons**

Base = (2ft x 9,800 ft)/9 SF/SY= **2,178 SY**

Stabilization = (2 ft x 9,800 ft) / 9 SF/SY = **2178 SY**

Embankment= 22.00’-16.00’ = 6 ft (see typical section sheet 4)

(6ft x 4.5ft (avg. fill height) x 9,800 ft)/27CF/CY= **9,800 CY**

Sod (4 ft x 9,800 ft) / 9 SF/SY = **4356 SY**

Cost Comparison Alternate 1 (Urban)

SR 87 416748-3 *(URBAN) to STA 257+00* **VALUE ENGINEERING IDEA No. 4** **COST COMPARISON SHEET**						
DESCRIPTION	**UNITS**	**UNIT COST**	**Reduced QTY.**	**Reduced COST**	**V.E. QTY.**	**V.E. COST**
Apshalt	SY	$104.35	120	$12,499		$0
Base	SY	$7.60	2178	$16,551		$0
Embankment	CY	$3.96	9800	$38,808		$0
Blackwater Bridge Savings	SF	$126.50	11120	$1,406,680		$0
Stabilization	SY	$2.27	2178	$4,944		$0
Sod	SY	$2.33	4356	$10,148		$0
				$0		$0
SUBTOTAL				**$1,489,630**		**$0**
MOBILIZATION (THIS IS SUB+CONTIN. X % =)		**5.0%**		$78,206		$0
MOT		**2.0%**		$29,793		$0
CONTINGENCIES		**5.0%**		$74,481		$0
CEI		**10.0%**		$167,211		$0
			-	$0		$0
GRAND TOTAL				**$1,839,321**		**$0**
POTENTIAL SAVINGS:				**$1,839,321**		

Calculations for Alternate 1 (Suburban)

Reduction in Quantities for Alt. 1 Suburban Section

Asphalt 1”= 110 lbs/SY x (1SY/ 9SF) x (1TN/2000 lbs) x 340 ft x 2 ft = **4 tons**

Base = (2ft x 340 ft)/9 SF/SY= **76 SY**

Stabilization = (2 ft x 340 ft) / 9 SF/SY = **76 SY**

Embankment= 25.25’-15.25’ = 5 ft (see typical section sheet 4)

(5ft x 4.5ft (avg. fill height) x 340 ft)/27CF/CY= **283 CY**

Sod (4 ft x 340 ft) / 9 SF/SY = **113 SY**

Cost Comparison Alternate 1 (Suburban)

SR 87 416748-3 *(SUBURBAN) to STA 257+00* **VALUE ENGINEERING IDEA No. 4** **COST COMPARISON SHEET**						
DESCRIPTION	**UNITS**	**UNIT COST**	**Reduced QTY.**	**Reduced COST**	**V.E. QTY.**	**V.E. COST**
Apshalt	SY	$104.35	4	$434		$0
Base	SY	$7.60	76	$574		$0
Embankment	CY	$3.96	283	$1,122		$0
Clearcreek Bridge Savings	SF	$126.50	0	$0		$0
Stabilization	SY	$2.27	76	$172		$0
Sod	SY	$2.33	113	$264		$0
				$0		$0
SUBTOTAL				**$2,565**		**$0**
MOBILIZATION (THIS IS SUB+CONTIN. X % =)		**5.0%**		$135		$0
MOT		**2.0%**		$51		$0
CONTINGENCIES		**5.0%**		$128		$0
CEI		**10.0%**		$288		$0
			-	$0		$0
GRAND TOTAL				**$3,168**		**$0**
POTENTIAL SAVINGS:				**$3,168**		

Calculations for Alternate 1

Reduction in Quantities for Alternate 1

Clear Creek Bridge 180 feet x 7 feet reduction = **1,260 SF**

Asphalt 1”= 110 lbs/SY x (1SY/ 9SF) x (1TN/2000 lbs) x 19,635 ft x 12 ft = **1,440 tons**

Base = 12ft + (2 x 4”)/12= (12.667ft x 19,635 ft)/9 SF/SY= **27,635 SY**

Stabilization = 12ft + (2 x 2’) = (16 ft x 19,635 ft) / 9 SF/SY = **34,907 SY**

Embankment= 25.25’-15.25’ = 10 ft (see typical section sheet 4)

(10ft x 4.5ft (avg. fill height) x 19,635 ft)/27CF/CY= **32,725 CY**

Sod (11.25 ft x 19,635 ft) / 9 SF/SY = **24,544 SY**

Increase in Quantities for Alternate 1

Performance Turf (8.25 ft x 19,635 ft) / 9 SF/SY= **17,999 SY**

Sidewalk (5ft x 19,635 ft) / 9 SF/SY = **10,908 SY**

Cost Comparison Alternate 1

SR 87 416748-3 Terminate Multi-Use Path at Heritage Trail add 5' Sidewalk
(ALT 1) **VALUE ENGINEERING IDEA No. 4**
COST COMPARISON SHEET

DESCRIPTION	UNITS	UNIT COST	Reduced QTY.	Reduced COST	Added QTY.	Added COST
Clear Creek Bridge	SF	$126.50	1260	$159,390		$0
Asphalt Multi Use Path	TN	$104.35	1440	$150,254		$0
Base for Path	SY	$7.60	27635	$210,027		$0
Stabilization for Path	SY	$2.27	34907	$79,238		$0
Embankment	CY	$3.96	32725	$129,591		$0
Sod	SY	$2.33	24544	$57,187		$0
Perf. Turf	SY	$0.75		$0	17999	$13,499
Sidewalk	SY	$26.96		$0	10908	$294,089
SUBTOTAL				**$785,687**		**$307,588**
MOBILIZATION (THIS IS SUB+CONTIN. X % =)		**5.0%**		$41,249		$16,148
MOT		**2.0%**		$15,714		$6,152
CONTINGENCIES		**5.0%**		$39,284		$15,379
CEI		**10.0%**		$88,193		$34,527
			-	$0		$0
GRAND TOTAL				**$970,127**		**$379,794**

POTENTIAL SAVINGS: $590,333

Calculations for Alternate 2

Reduction in Quantities for Alternate 2

Clear Creek Bridge (180 feet x 7 feet reduction)/9 SF/SY = **1,260 SY**

Asphalt 1”= 110 lbs/SY x (1SY/ 9SF) x (1TN/2000 lbs) x 24,620 ft x 12 ft =**1,805 tons**

Base = 12ft + (2 x 4”)/12= (12.667ft x 24,620 ft)/9 SF/SY= **34,651 SY**

Stabilization = 12ft + (2 x 2’) = (16 ft x 24,620 ft) / 9 SF/SY = **43,769 SY**

Embankment= 25.25’-15.25’ = 10 ft (see typical section sheet 4)

(10ft x 4.5ft (avg. fill height) x 24,620 ft)/27CF/CY= **41,033 CY**

Sod (11.25 ft x 24,620 ft) / 9 SF/SY = **30,775 SY**

Increase in Quantities for Alternate 2

Performance Turf (8.25 ft x 24,620 ft) / 9 SF/SY= **22,568 SY**

Sidewalk (5ft x 24,620 ft) / 9 SF/SY = **13,678 SY**

Cost Comparison Alternate 2

SR 87 416748-3 Terminate Multi-Use Path at Heritage Trail add 5' Sidewalk
(ALT 2) **VALUE ENGINEERING IDEA No. 4**
COST COMPARISON SHEET

DESCRIPTION	UNITS	UNIT COST	Reduced QTY.	Reduced COST	Added QTY.	Added COST
Clear Creek Bridge	SF	$126.50	1260	$159,390		$0
Asphalt Multi Use Path	TN	$104.35	1805	$188,400		$0
Base for Path	SY	$7.60	34651	$263,350		$0
Stabilization for Path	SY	$2.27	43769	$99,355		$0
Embankment	CY	$3.96	41033	$162,492		$0
Sod	SY	$2.33	30775	$71,706		$0
Perf. Turf	SY	$0.75		$0	22568	$16,926
Sidewalk	SY	$26.96		$0	13678	$368,753
SUBTOTAL				**$944,693**		**$385,679**
MOBILIZATION (THIS IS SUB+CONTIN. X % =)		**5.0%**		$49,596		$20,248
MOT		**2.0%**		$18,894		$7,714
CONTINGENCIES		**5.0%**		$47,235		$19,284
CEI		**10.0%**		$106,042		$43,292
			-	$0		$0
GRAND TOTAL				**$1,166,460**		**$476,217**

POTENTIAL SAVINGS: $690,243

VE Idea 5

Description

Reduce the width of the Multi-Use Path from 12 feet to 10 feet from the beginning of the project up to station 257+00. Terminate the Multi-Use Path at the Blackwater Heritage Trail (Station 257+00).

Since the original intent of the multi-use path was to connect the old highway 1 brick road along highway 90 to the Blackwater Heritage Trail, this can be achieved by terminating the multi-use path at station 257+00. The right-of-way will be purchased for possible addition of a multi-use path or sidewalk for the remainder of the project in the future. For Alternate 1, this will result in 19,635 feet reduction (455+15 – 257+00 - 180 feet for Clear Creek Bridge) of the following items in the multi-use trail: asphalt, base, stabilization, embankment, and sod. For Alternate 2, this will result in 24,620 feet reduction (505+00 – 257+00 - 180 feet for Clear Creek Bridge) of the same items mentioned for Alternate 1. The only item that will increase for both alternates is performance turf. The Clear Creek Bridge, which is180 feet in length, can have a reduced width of 13 feet due to eliminating the Multi-Use Path.

The Plans Preparation Manual allows a 10 foot Multi-Use Path in lieu of the planned 12 foot path. The reduction in the width of the Multi-Use Path will result in additional reductions in quantities for asphalt, base, stabilization, embankment, and sod from the beginning of the project up to station 257+00.

Planned Detail vs. VE Idea Detail (Urban)

Planned Detail (Urban Section)

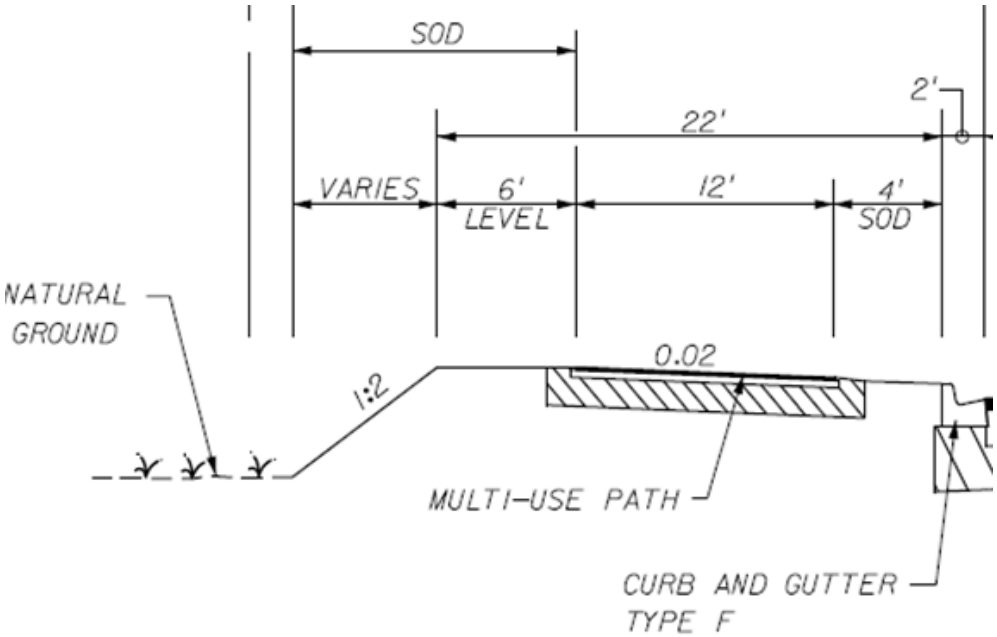

VE Idea Detail (Urban Section)

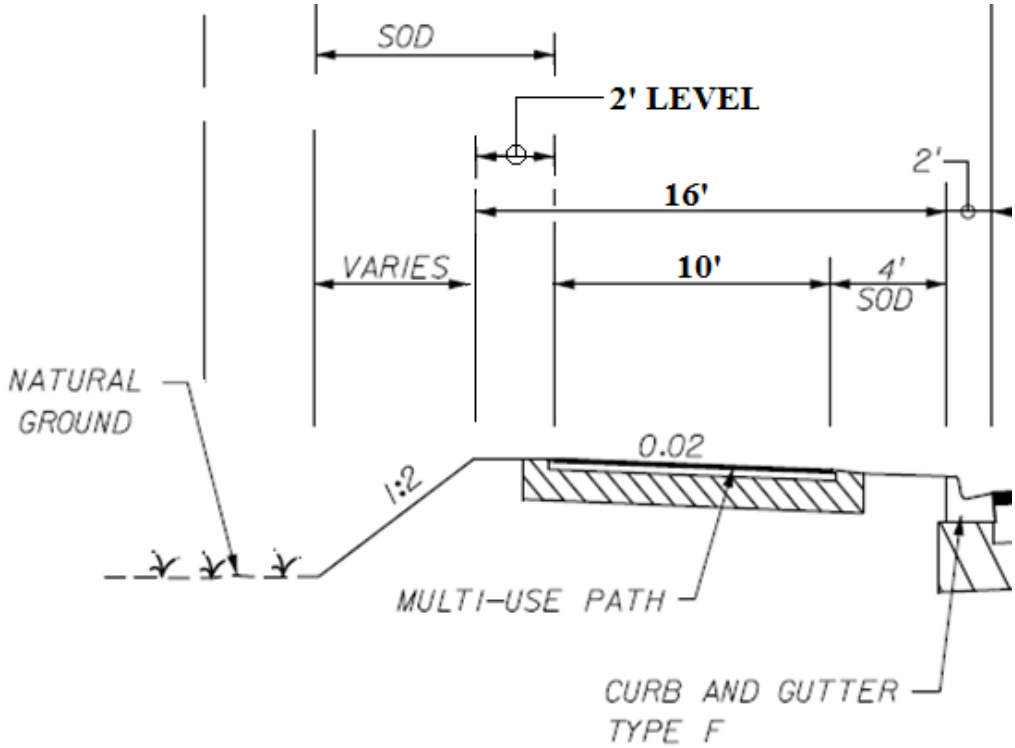

Planned Detail vs. VE Idea Detail (Suburban)

Planned Detail (Suburban Section)

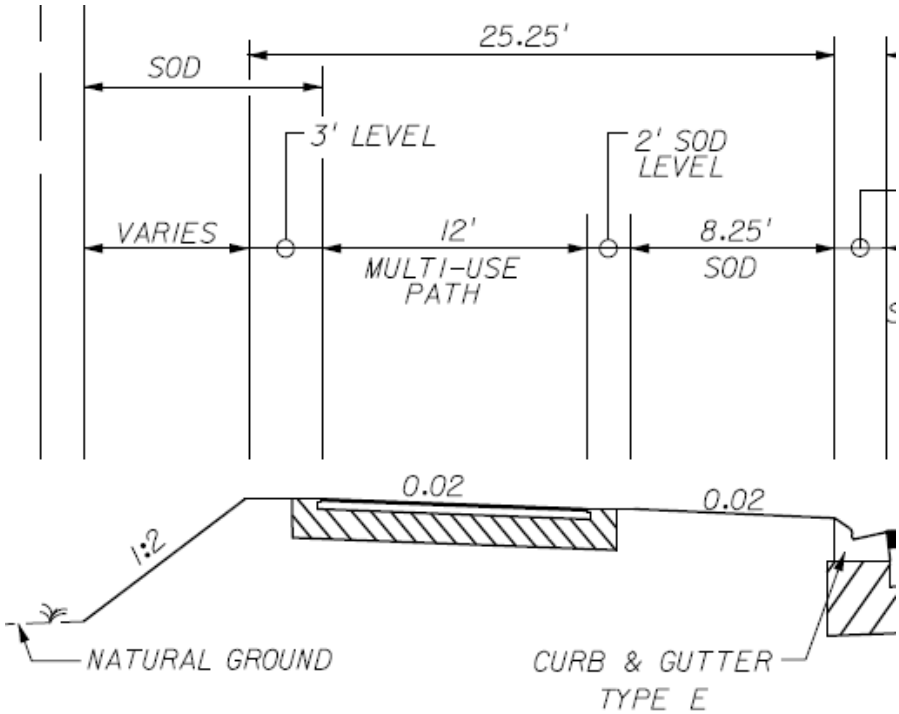

VE Idea Detail (Suburban Section)

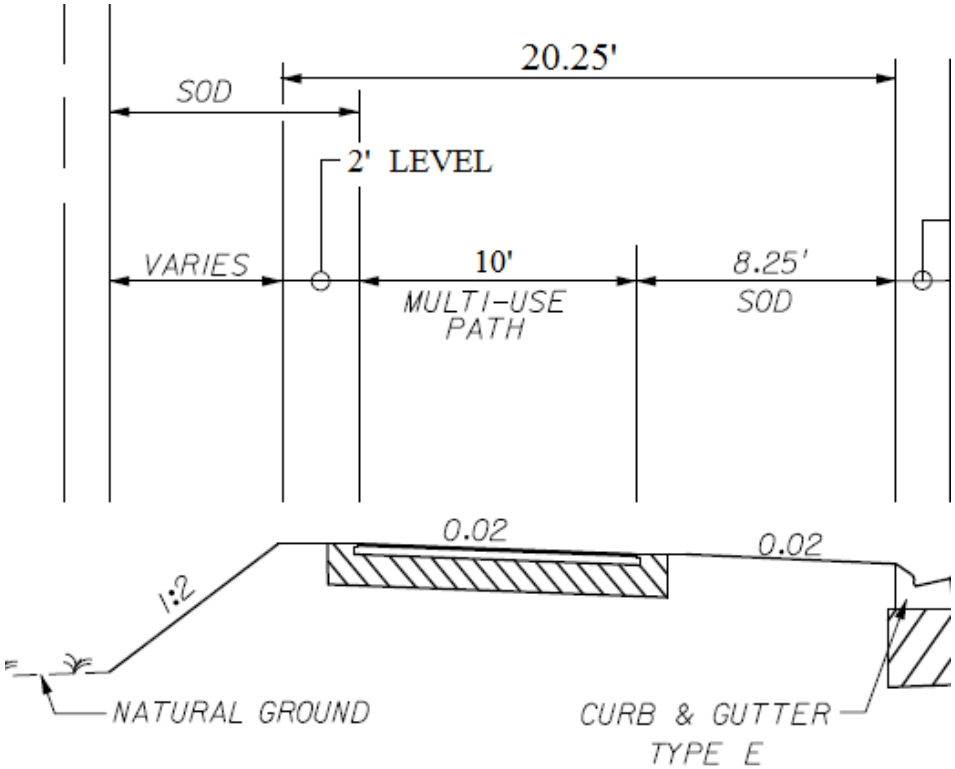

Planned Detail vs. VE Idea Detail Blackwater Bridge

Planned Detail Blackwater Bridge

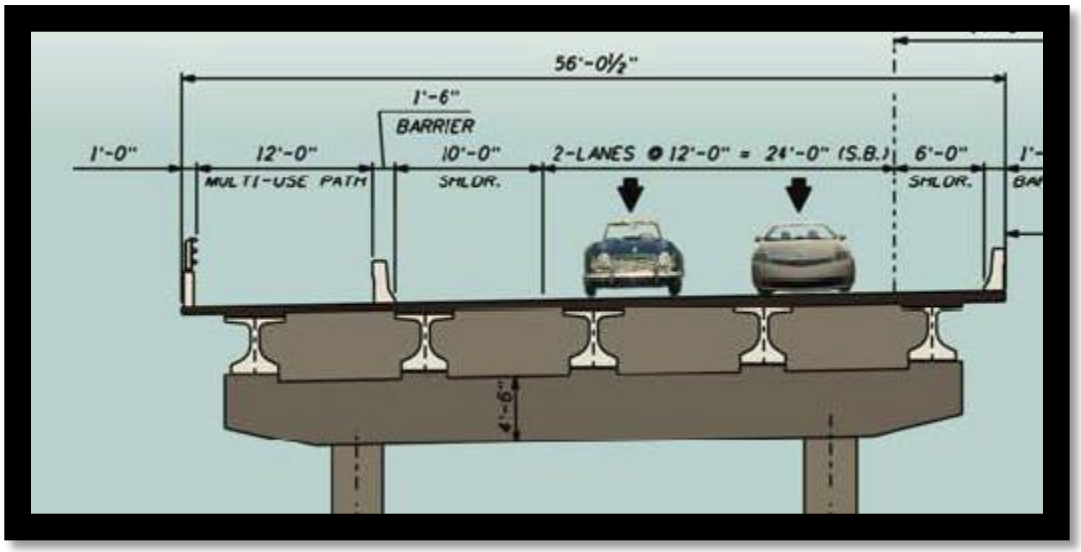

VE Idea Detail Blackwater Bridge

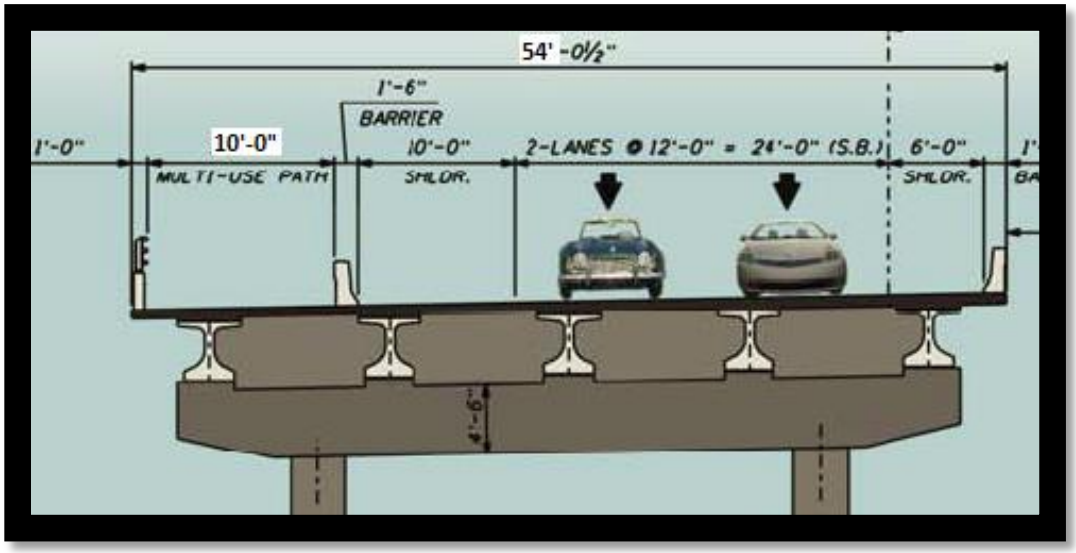

Planned Detail vs. VE Idea Detail Station 257+00

Planned Detail

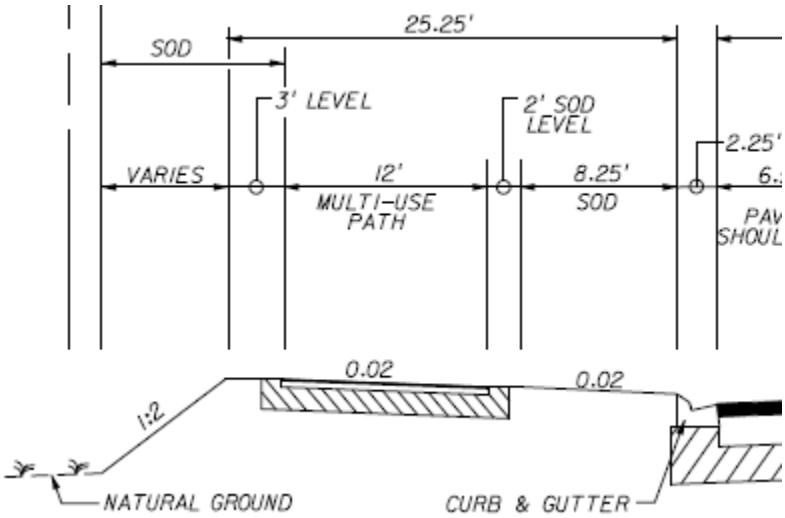

VE Idea Detail (Station 257+00 to SR 87 North)

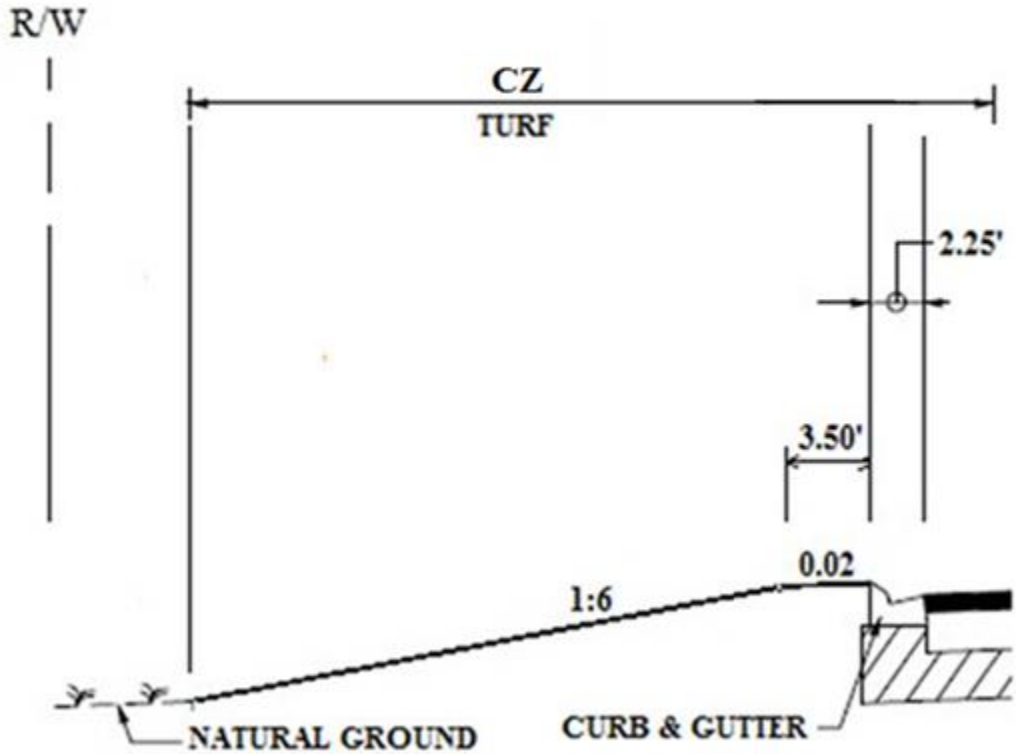

Planned Detail vs. VE Idea Detail Clear Creek Bridge

Planned Detail (Clear Creek Bridge)

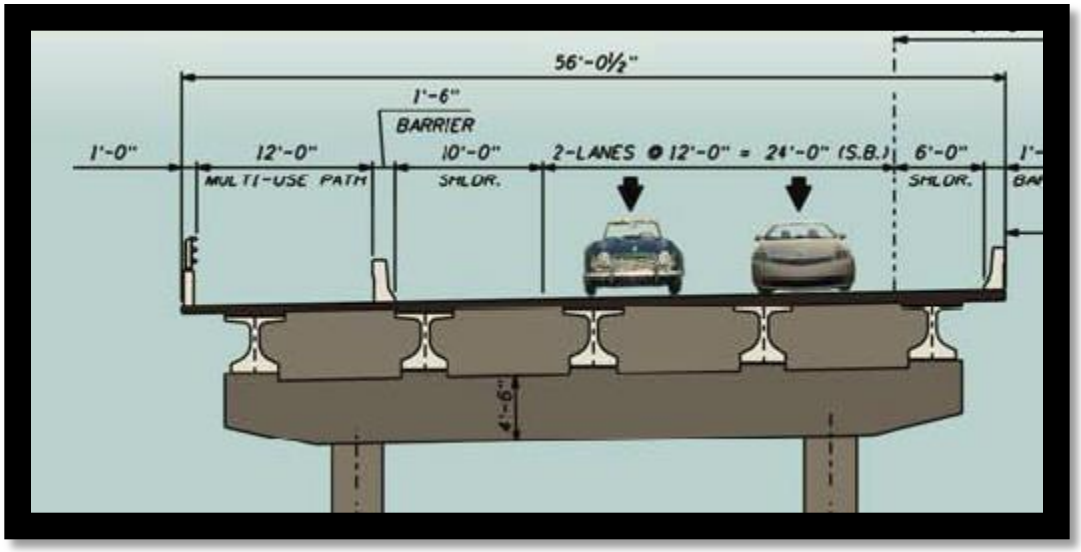

VE Idea Detail (Clear Creek Bridge)

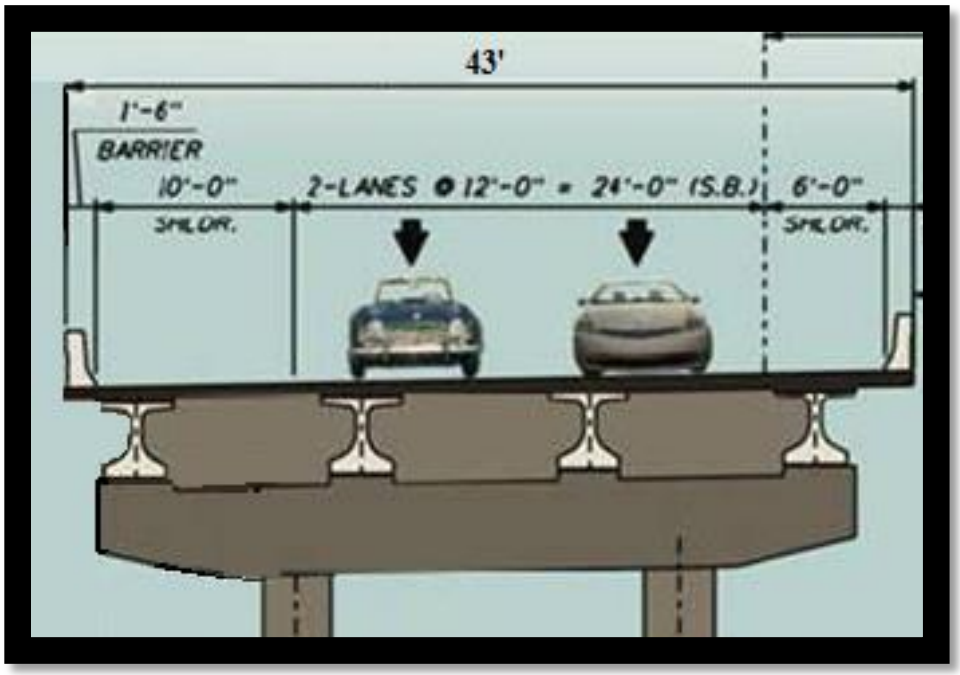

Calculations for Alternate 1 Urban

Reduction in Quantities for Alt. 1 Urban Section

Blackwater Creek (5560 feet x 2 feet reduction) = **11,120 SF**

Asphalt 1”= 110 lbs/SY x (1SY/ 9SF) x (1TN/2000 lbs) x 9,800 ft x 2 ft = **120 tons**

Base = (2ft x 9,800 ft)/9 SF/SY= **2,178 SY**

Stabilization = (2 ft x 9,800 ft) / 9 SF/SY = **2178 SY**

Embankment= 22.00’-16.00’ = 6 ft (see typical section sheet 4)

(6ft x 4.5ft (avg. fill height) x 9,800 ft)/27CF/CY= **9,800 CY**

Sod (4 ft x 9,800 ft) / 9 SF/SY = **4356 SY**

Cost Comparison Alternate 1 (Urban)

SR 87 416748-3 *(URBAN) to STA 257+00* **VALUE ENGINEERING IDEA No. 4** **COST COMPARISON SHEET**						
DESCRIPTION	**UNITS**	**UNIT COST**	**Reduced QTY.**	**Reduced COST**	**V.E. QTY.**	**V.E. COST**
Apshalt	SY	$104.35	120	$12,499		$0
Base	SY	$7.60	2178	$16,551		$0
Embankment	CY	$3.96	9800	$38,808		$0
Blackwater Bridge Savings	SF	$126.50	11120	$1,406,680		$0
Stabilization	SY	$2.27	2178	$4,944		$0
Sod	SY	$2.33	4356	$10,148		$0
				$0		$0
SUBTOTAL				**$1,489,630**		**$0**
MOBILIZATION (THIS IS SUB+CONTIN. X % =)		**5.0%**		$78,206		$0
MOT		**2.0%**		$29,793		$0
CONTINGENCIES		**5.0%**		$74,481		$0
CEI		**10.0%**		$167,211		$0
			-	$0		$0
GRAND TOTAL				**$1,839,321**		**$0**
POTENTIAL SAVINGS:				**$1,839,321**		

Calculations for Alternate 1 (Suburban)

Reduction in Quantities for Alt. 1 Suburban Section

Asphalt 1”= 110 lbs/SY x (1SY/ 9SF) x (1TN/2000 lbs) x 340 ft x 2 ft = **4 tons**

Base = (2ft x 340 ft)/9 SF/SY= **76 SY**

Stabilization = (2 ft x 340 ft) / 9 SF/SY = **76 SY**

Embankment= 25.25’-15.25’ = 5 ft (see typical section sheet 4)

(5ft x 4.5ft (avg. fill height) x 340 ft)/27CF/CY= **283 CY**

Sod (4 ft x 340 ft) / 9 SF/SY = **113 SY**

Cost Comparison Alternate 1 Suburban

SR 87 416748-3 *(SUBURBAN) to STA 257+00* **VALUE ENGINEERING IDEA No. 4** **COST COMPARISON SHEET**						
DESCRIPTION	**UNITS**	**UNIT COST**	**Reduced QTY.**	**Reduced COST**	**V.E. QTY.**	**V.E. COST**
Apshalt	SY	$104.35	4	$434		$0
Base	SY	$7.60	76	$574		$0
Embankment	CY	$3.96	283	$1,122		$0
Clearcreek Bridge Savings	SF	$126.50	0	$0		$0
Stabilization	SY	$2.27	76	$172		$0
Sod	SY	$2.33	113	$264		$0
				$0		$0
SUBTOTAL				**$2,565**		**$0**
MOBILIZATION (THIS IS SUB+CONTIN. X % =)		**5.0%**		$135		$0
MOT		**2.0%**		$51		$0
CONTINGENCIES		**5.0%**		$128		$0
CEI		**10.0%**		$288		$0
			-	$0		$0
GRAND TOTAL				**$3,168**		**$0**
POTENTIAL SAVINGS:				**$3,168**		

Calculations for Alternate 1

Reduction in Quantities for Alternate 1

Clear Creek Bridge 180 feet x 13 feet reduction = **2,340 SF**

Asphalt 1”= 110 lbs/SY x (1SY/ 9SF) x (1TN/2000 lbs) x 19,635 ft x 12 ft = **1,440 tons**

Base = 12 ft + (2 x 4”)/12= (12.667 ft x 19,635 ft)/9 SF/SY= **27,635 SY**

Stabilization = 12 ft + (2 x 2’) = (16 ft x 19,635 ft) / 9 SF/SY = **34,907 SY**

Embankment= [(71.2 SF-21.2SF) x 19,635 ft] / 27CF/CY = **36,361 CY**

Base Box = (12ft x 1/12ft) + (12.667ft x 4/12 ft) + (16ft x 1ft) = 21.2SF

Sod = 13.25 ft x 19,635 ft / 9 SF/SY = **28,907 SY**

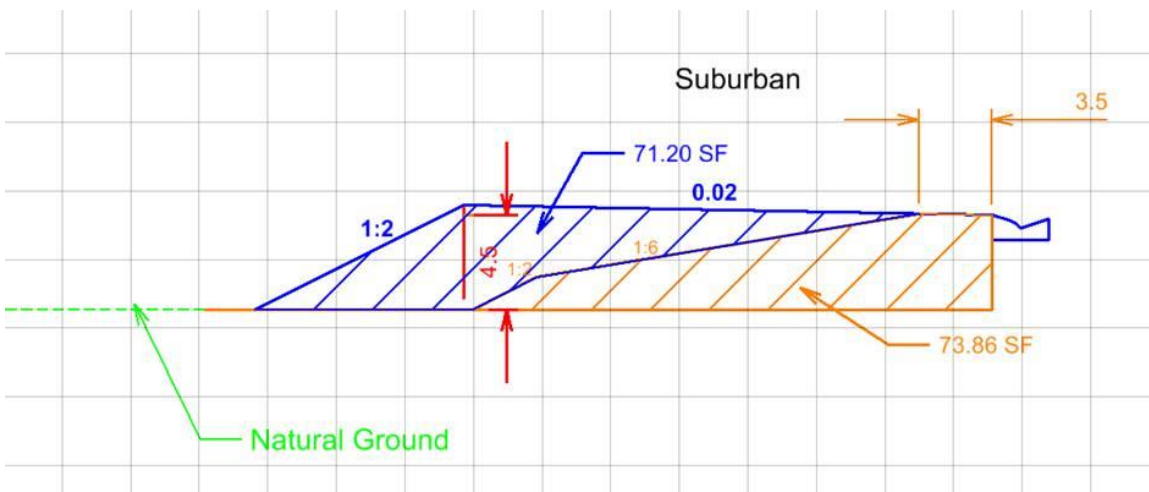

Increase in Quantities for Alternate 1

Performance Turf (21.75 ft x 19,635 ft) / 9 SF/SY= **47, 451 SY**

Cost Comparison for Alternate 1

SR 87 416748-3 Terminate Multi-Use Path at Heritage Trail
(ALT 1) **VALUE ENGINEERING IDEA No. 5**
COST COMPARISON SHEET

DESCRIPTION	UNITS	UNIT COST	Reduced QTY.	Reduced COST	Added QTY.	Added COST
Clear Creek Bridge	SF	$126.50	2340	$296,010		$0
Asphalt Multi Use Path	TN	$104.35	1440	$150,254		$0
Base for Path	SY	$7.60	27635	$210,027		$0
Stabilization for Path	SY	$2.27	34907	$79,238		$0
Embankment	CY	$3.96	36361	$143,990		$0
Sod	SY	$2.33	28907	$67,354		$0
Perf. Turf	SY	$0.75		$0	47451	$35,588
SUBTOTAL				**$946,873**		**$35,588**
MOBILIZATION (THIS IS SUB+CONTIN. X % =)		**5.0%**		$49,711		$1,868
MOT		**2.0%**		$18,937		$712
CONTINGENCIES		**5.0%**		$47,344		$1,779
CEI		**10.0%**		$106,286		$3,995
			-	$0		$0
GRAND TOTAL				**$1,169,151**		**$43,943**

POTENTIAL SAVINGS: $1,125,208

Calculations for Alternate 2

Reduction in Quantities for Alternate 2

Clear Creek Bridge 180 feet x 13 feet reduction = **2,340 SF**

Asphalt 1”= 110 lbs/SY x (1SY/ 9SF) x (1TN/2000 lbs) x 24,620 ft x 12 ft = **1,805 tons**

Base = 12ft + (2 x 4”)/12= (12.667ft x 24,620 ft)/9 SF/SY= **34,651 SY**

Stabilization = 12ft + (2 x 2’) = (16 ft x 24,620 ft) / 9 SF/SY = **43,769 SY**

Embankment= [(71.2 SF-21.2SF) x 24,620 ft] / 27CF/CY = **45,593 CY**

Base Box = (12ft x 1/12ft) + (12.667ft x 4/12 ft) + (16ft x 1ft) = 21.2SF

Sod = 13.25 ft x 24,620 ft / 9 SF/SY = **36,246 SY**

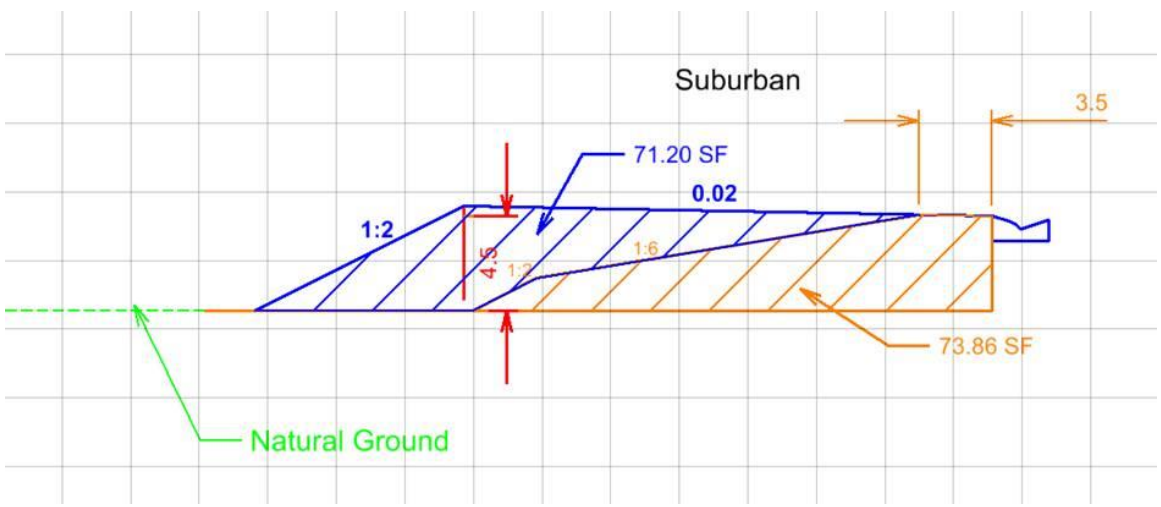

Increase in Quantities for Alternate 1

Performance Turf (21.75 ft x 24,620 ft) / 9 SF/SY= **59,498 SY**

Cost Comparison for Alternate 2

SR 87 416748-3 Terminate Multi-Use Path at Heritage Trail *(ALT 2)* **VALUE ENGINEERING IDEA No. 5** **COST COMPARISON SHEET**						
DESCRIPTION	**UNITS**	**UNIT COST**	**Reduced QTY.**	**Reduced COST**	**Added QTY.**	**Added COST**
Clear Creek Bridge	SF	$126.50	2340	$296,010		$0
Asphalt Multi Use Path	TN	$104.35	1805	$188,400		$0
Base for Path	SY	$7.60	34651	$263,350		$0
Stabilization for Path	SY	$2.27	43769	$99,355		$0
Embankment	CY	$3.96	45593	$180,547		$0
Sod	SY	$2.33	36246	$84,453		$0
Perf. Turf	SY	$0.75		$0	59498	$44,624
SUBTOTAL				**$1,112,116**		**$44,624**
MOBILIZATION (THIS IS SUB+CONTIN. X % =)		**5.0%**		$58,386		$2,343
MOT		**2.0%**		$22,242		$892
CONTINGENCIES		**5.0%**		$55,606		$2,231
CEI		**10.0%**		$124,835		$5,009
			-	$0		$0
GRAND TOTAL				**$1,373,185**		**$55,099**
POTENTIAL SAVINGS:				**$1,318,086**		

VE Idea 6

Eliminate the five foot sidewalk on the east side of the roadway for the entire length of the project. Since there is multi-use path and sidewalk on the western roadway, there is no need for sidewalk on the eastern roadway. This is a new alignment with no developed areas.

Planned Detail vs. VE Idea Detail (Urban)

Planned Detail Urban Section

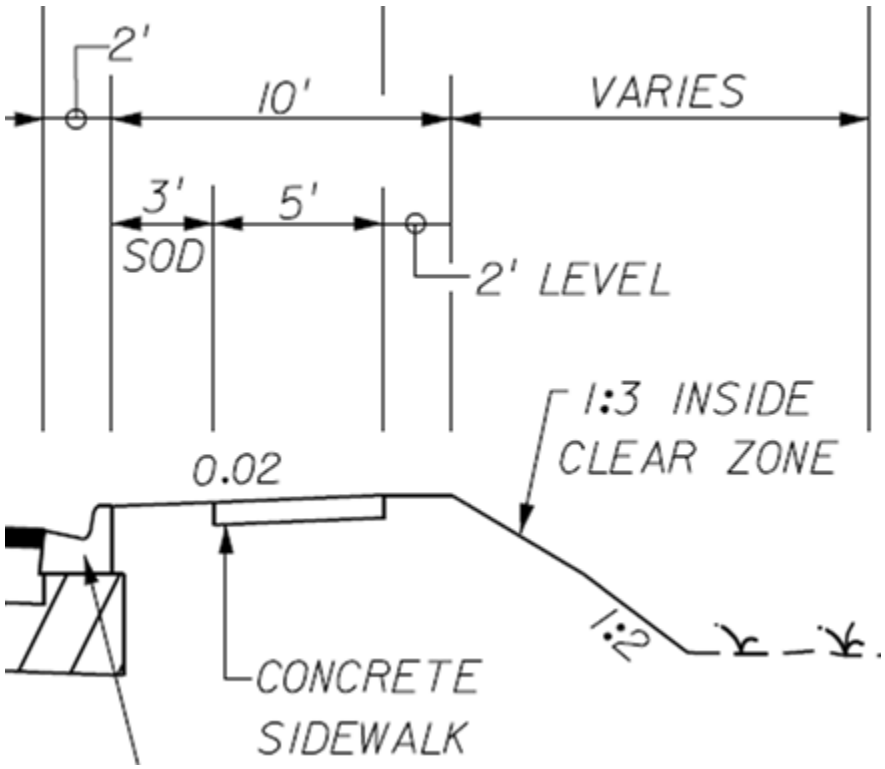

Planned Detail vs. VE Idea Detail (Suburban)

Planned Detail Suburban Section

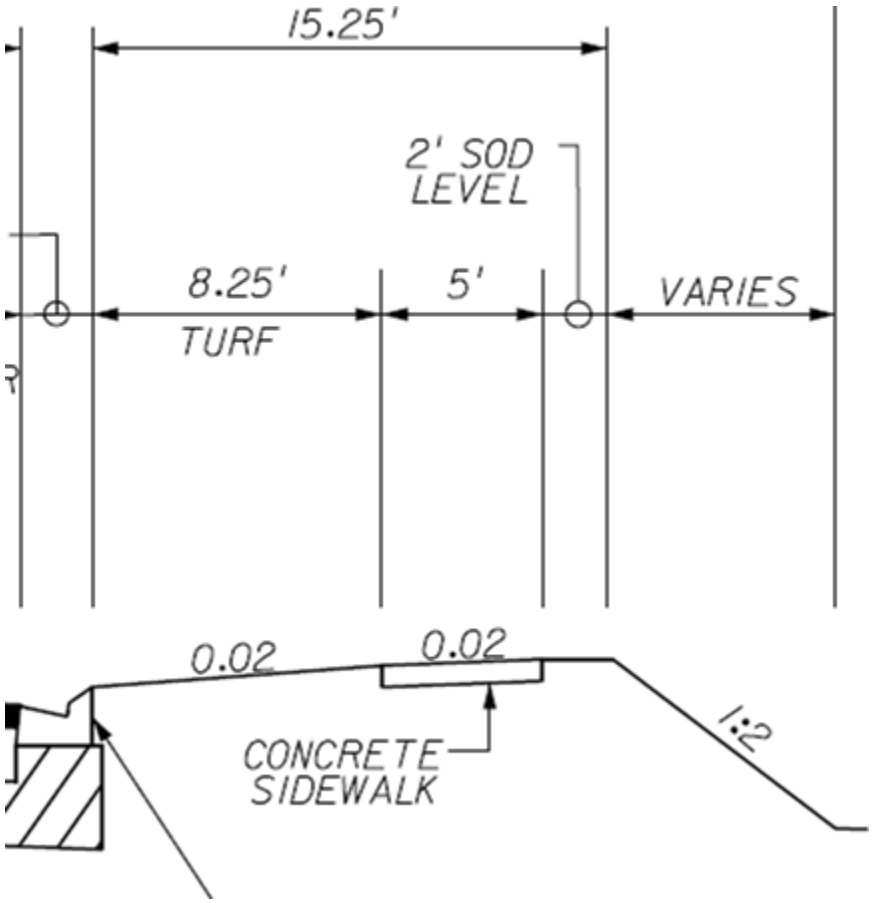

Planned Detail vs. VE Idea Detail

VE Idea Detail for Urban and Suburban Sections

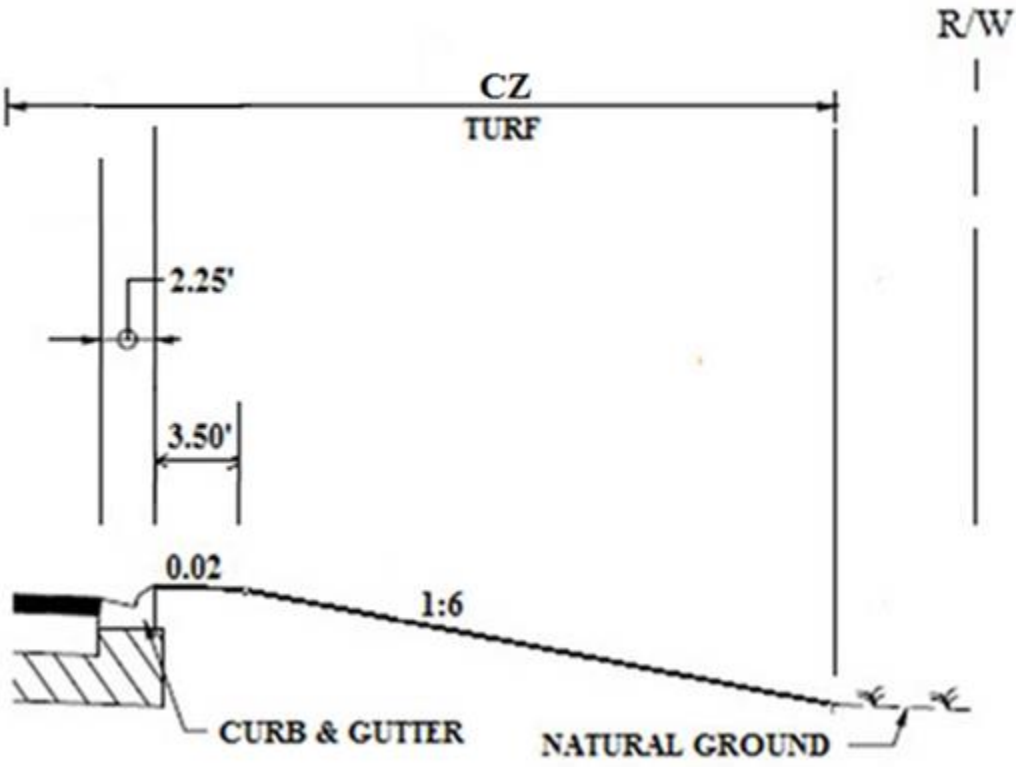

Calculations for Alternate 1 (Urban)

Reduction in Quantities for Alt. 1 Urban Section

Blackwater Creek (5,560 feet x 6 feet reduction) = **33,360 SF**

Sidewalk (13,920 feet x 5 feet reduction)/9 SF/SY = **7,733 SY**

Embankment= 12.68 SF (See Urban CADD Drawing)

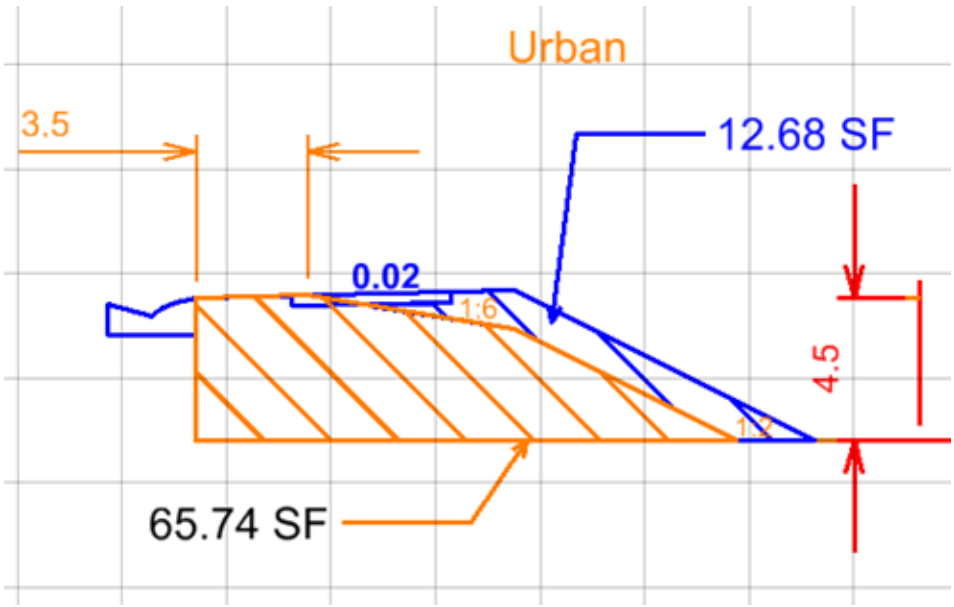

(12.68) x 13,920 ft)/27CF/CY= **6,537 CY**

Sod (2 ft x 13,920 ft) / 9 SF/SY = **3,093 SY**

Turf (7 ft x 13,920 ft) / 9 SF/SY = **10,827 SY**

Calculations for Alternate 1 (Suburban)

Reduction in Quantities for Alt. 1 Suburban Section

Clearwater Creek (180 feet x 6 feet reduction) = **1,080 SF**

Sidewalk (17,989 feet x 5 feet reduction)/9 SF/SY = **9,994 SY**

Embankment= 26.67 SF (See Suburban CADD Drawing)

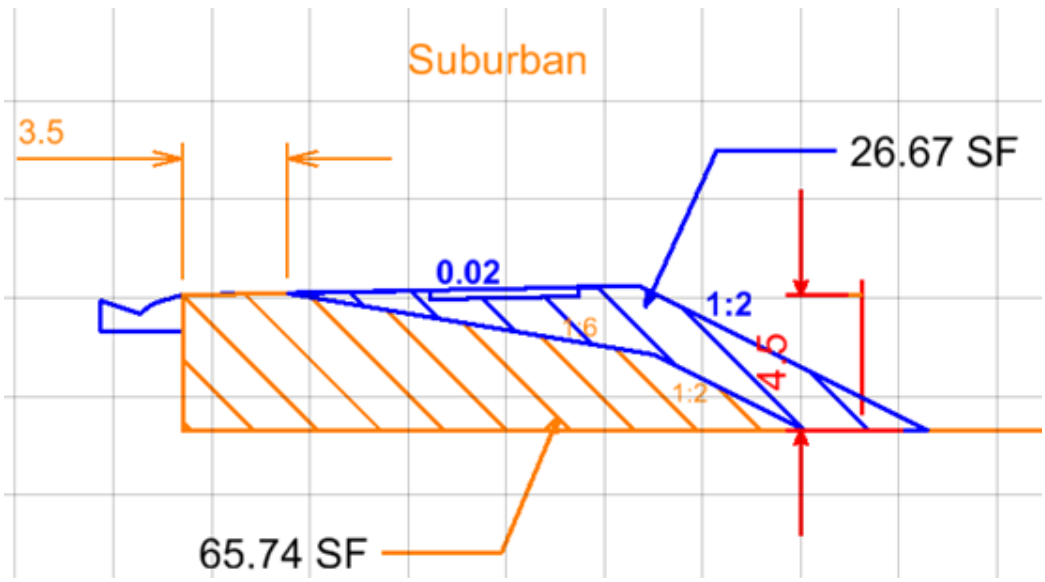

(26.67) x 17,989 ft)/27CF/CY= **17,769 CY**

Sod (2 ft x 17,989 ft) / 9 SF/SY = **3,998 SY**

Turf (7 ft x 17,989 ft) / 9 SF/SY = **13,991 SY**

Cost Comparison Alternate 1

SR 87 416748-3 (Delete 5' Sidewalk entire project East side)
(ALT 1) **VALUE ENGINEERING IDEA No. 6**
COST COMPARISON SHEET

DESCRIPTION	UNITS	UNIT COST	Reduced QTY.	Reduced COST	Added QTY.	Added COST
5' Sidewalk (East Side - Urban & Suburban)	SY	$26.96	17,727	$477,926		$ -
Bridges (6' width)	SF	$126.50	34,440	$4,356,660		$ -
Embankment	CY	$3.96	24,306	$96,253		$ -
Performance Turf, Sod	SY	$2.33	7,091	$16,522		$ -
				$0		$ -
Performance Turf	SY	$0.75		$0	24818	$ 18,614
				$0		$ -
				$0		$ -
SUBTOTAL				**$4,947,361**		**$ 18,614**
MOBILIZATION (THIS IS SUB+CONTIN. X % =)		**5.0%**		$259,736		$ 977
MOT		**2.0%**		$98,947		$ 372
CONTINGENCIES		**5.0%**		$247,368		$ 931
CEI		**10.0%**		$555,341		$ 2,089
			-	$0		$ -
GRAND TOTAL				**$6,108,754**		**$ 22,983**

POTENTIAL SAVINGS: $6,085,771

Calculations for Alternate 2 (Urban)

Reduction in Quantities for Alt. 2 Urban Section

Blackwater Creek (5,560 feet x 6 feet reduction) = **33,360 SF**

Sidewalk (13,920 feet x 5 feet reduction)/9 SF/SY = **7,733 SY**

Embankment= 12.68 SF (See Urban CADD Drawing)

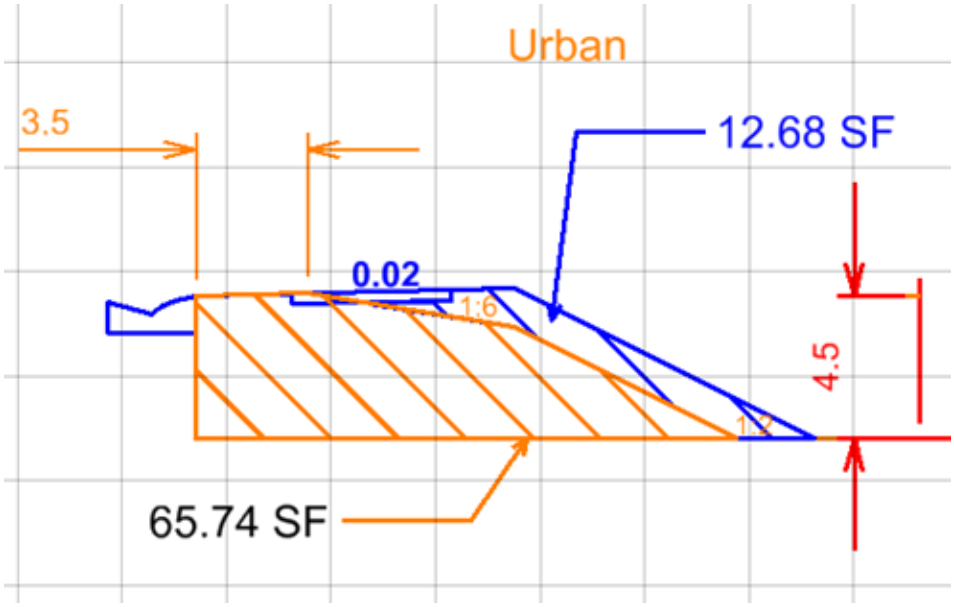

(12.68) x 13,920 ft)/27CF/CY= **6,537 CY**

Sod (2 ft x 13,920 ft) / 9 SF/SY = **3,093 SY**

Turf (7 ft x 13,920 ft) / 9 SF/SY = **10,827 SY**

Calculations for Alternate 2 (Suburban)

Reduction in Quantities for Alt. 2 Suburban Section

Clearwater Creek (180 feet x 6 feet reduction) = **1,080 SF**

Sidewalk (20,904 feet x 5 feet reduction)/9 SF/SY = **11,613 SY**

Embankment= 26.67 SF (See Suburban CADD Drawing)

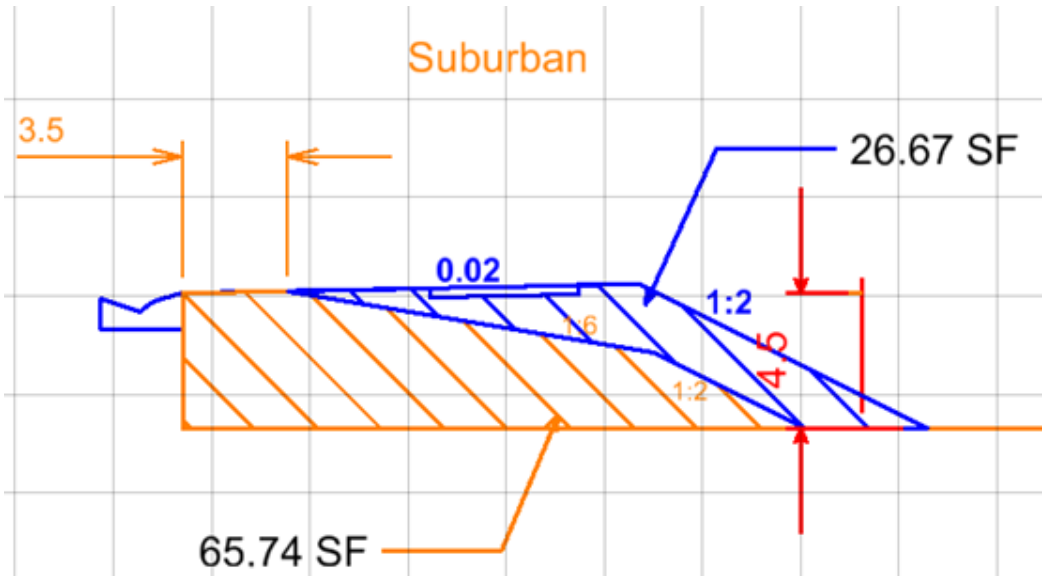

(26.67) x 20,904 ft)/27CF/CY= **20,649 CY**

Sod (2 ft x 20,904 ft) / 9 SF/SY = **4,645 SY**

Turf (7 ft x 20,904 ft) / 9 SF/SY = **16,259 SY**

Cost Comparison Alternate 2

SR 87 416748-3 (Delete 5' Sidewalk entire project East side) *(ALT 2)* **VALUE ENGINEERING IDEA No. 6** **COST COMPARISON SHEET**						
DESCRIPTION	**UNITS**	**UNIT COST**	**Reduced QTY.**	**Reduced COST**	**Added QTY.**	**Added COST**
5' Sidewalk (East Side - Urban & Suburban)	SY	$26.96	19,347	$521,586		$ -
Bridges (6' width)	SF	$126.50	34,440	$4,356,660		$ -
Embankment	CY	$3.96	27,186	$107,656		$ -
Performance Turf, Sod	SY	$2.33	7,739	$18,031		$ -
				$0		$ -
Performance Turf	SY	$0.75		$0	27085	$ 20,314
				$0		$ -
				$0		$ -
SUBTOTAL				**$5,003,933**		**$ 20,314**
MOBILIZATION (THIS IS SUB+CONTIN. X % =)		**5.0%**		$262,706		$ 1,066
MOT		**2.0%**		$100,079		$ 406
CONTINGENCIES		**5.0%**		$250,197		$ 1,016
CEI		**10.0%**		$561,691		$ 2,280
			-	$0		$ -
GRAND TOTAL				**$6,178,606**		**$ 25,083**
POTENTIAL SAVINGS:				**$6,153,523**		

VE Idea 7

This idea is to combine VE Idea 4 and VE Idea 6.

Reduce the width of the Multi-Use Path from 12 feet to 10 feet from the beginning of the project up to station 257+00. Construct 5 foot sidewalk in lieu of the Multi-Use Path for the remainder of the project. Eliminate the five foot sidewalk on the east side of the roadway for the entire length of the project.

Since the original intent of the multi-use path was to connect the old highway 1 brick road along highway 90 to the Blackwater Heritage Trail, this can be achieved by terminating the multi-use path at station 257+00. A new five foot sidewalk will be started at that location and continue to the end of the project at SR 87 north (station 455+15 for alternate 1). For Alternate 1, this will result in 19,635 feet reduction (455+15 – 257+00 - 180 feet for Clear Creek Bridge) of the following items in the multi-use trail: asphalt, base, stabilization, embankment, and sod. For Alternate 2, this will result in 24,620 feet reduction (505+00 – 257+00 - 180 feet for Clear Creek Bridge) of the same items mentioned for Alternate 1. The only items that will increase for both alternates are performance turf and sidewalk. The Clear Creek Bridge, which is180 feet in length, can have a reduced width of seven feet due to going from a 12 foot path to a 5 foot sidewalk.

The Plans Preparation Manual allows a 10 foot Multi-Use Path in lieu of the planned 12 foot path. The reduction in the width of the Multi-Use Path will result in additional reductions in quantities for asphalt, base, stabilization, embankment, and sod from the beginning of the project up to station 257+00.

This new alignment is in an undeveloped area and sidewalk is not needed on the east side of the roadway.

Planned Detail vs. VE Idea Detail (Urban)

Planned Detail (Urban Section)

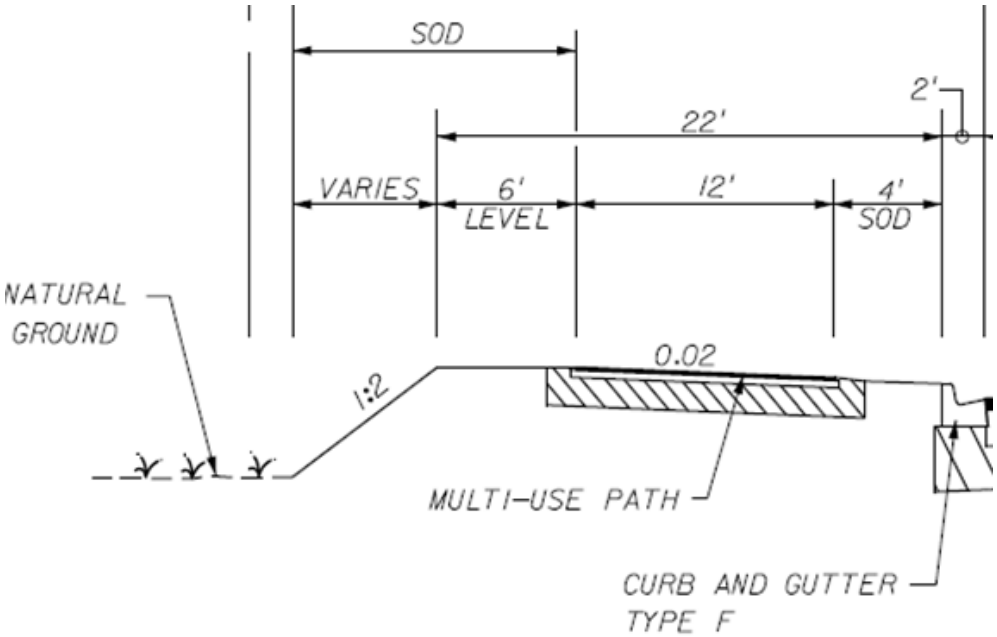

VE Idea Detail (Urban Section)

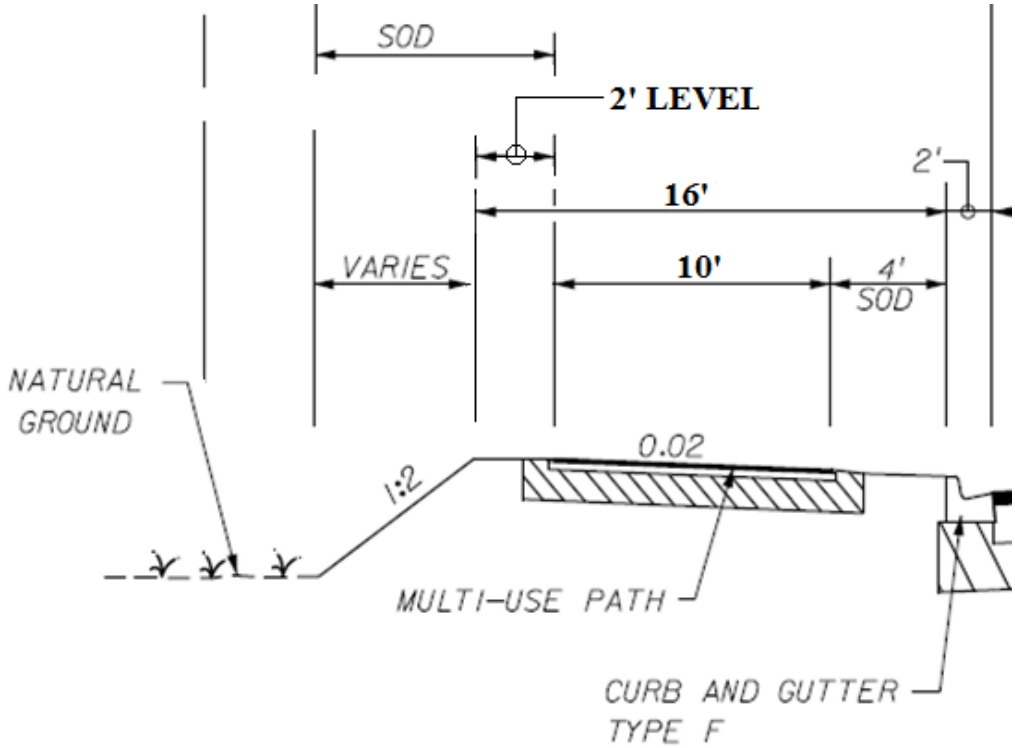

Planned Detail vs. VE Idea Detail (Suburban)

Planned Detail (Suburban Section)

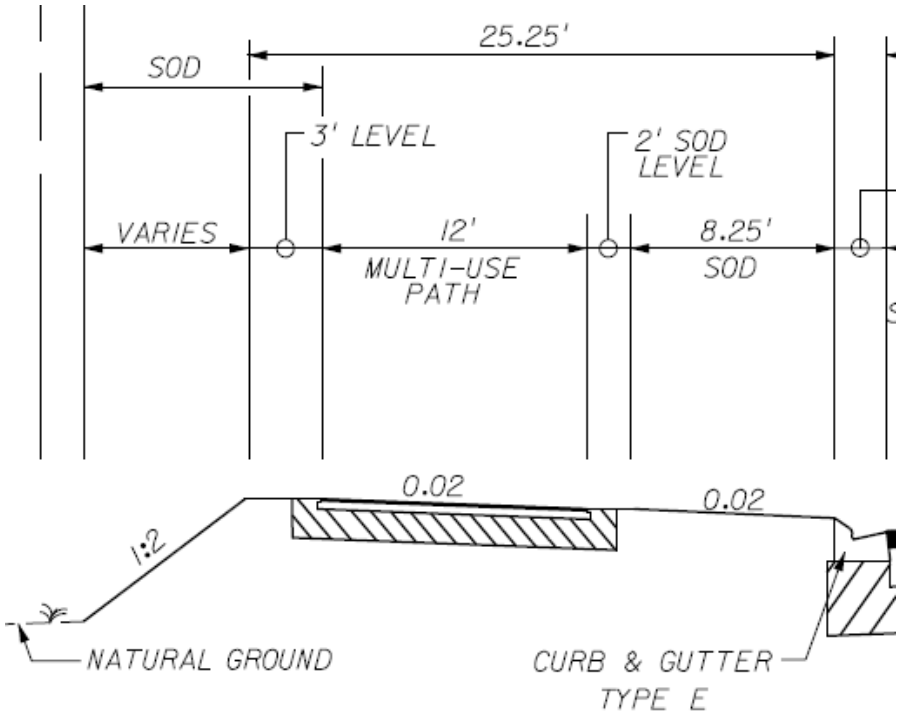

VE Idea Detail (Suburban Section)

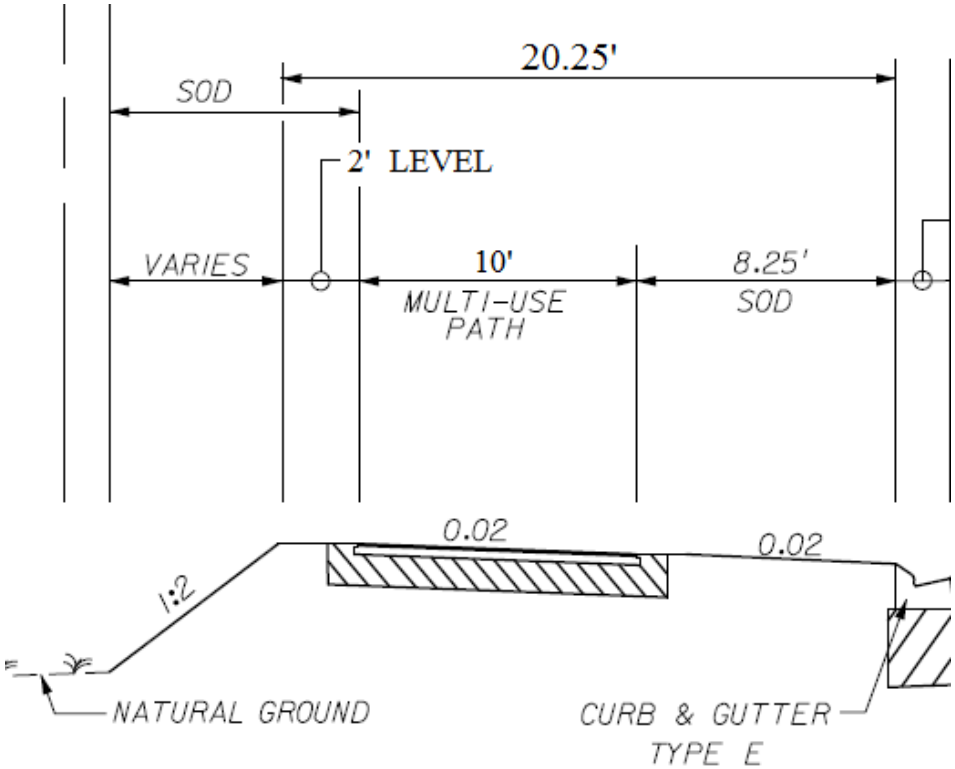

Planned Detail vs. VE Idea Detail Blackwater Bridge

Planned Detail Blackwater Bridge

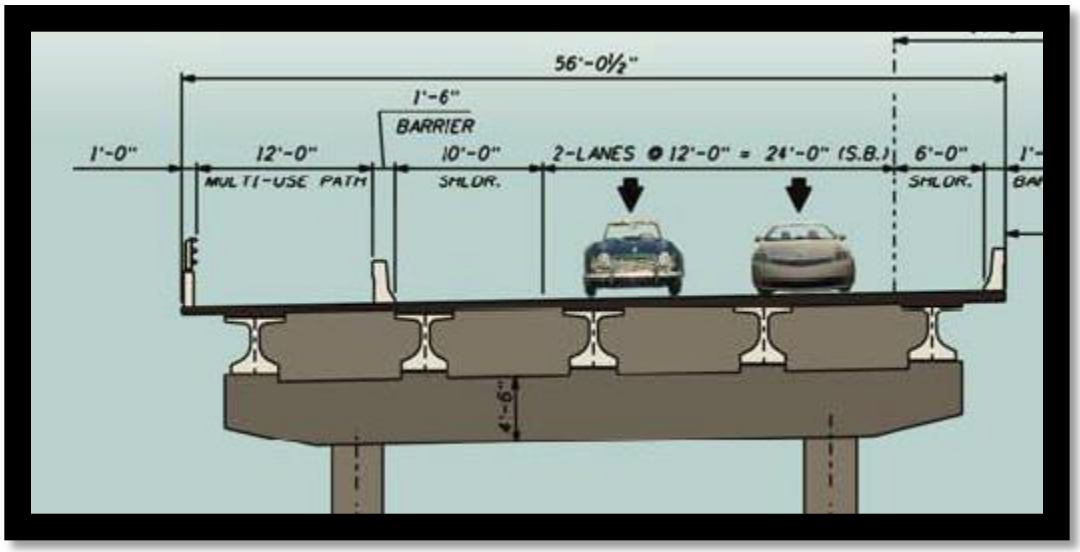

VE Idea Detail Blackwater Bridge

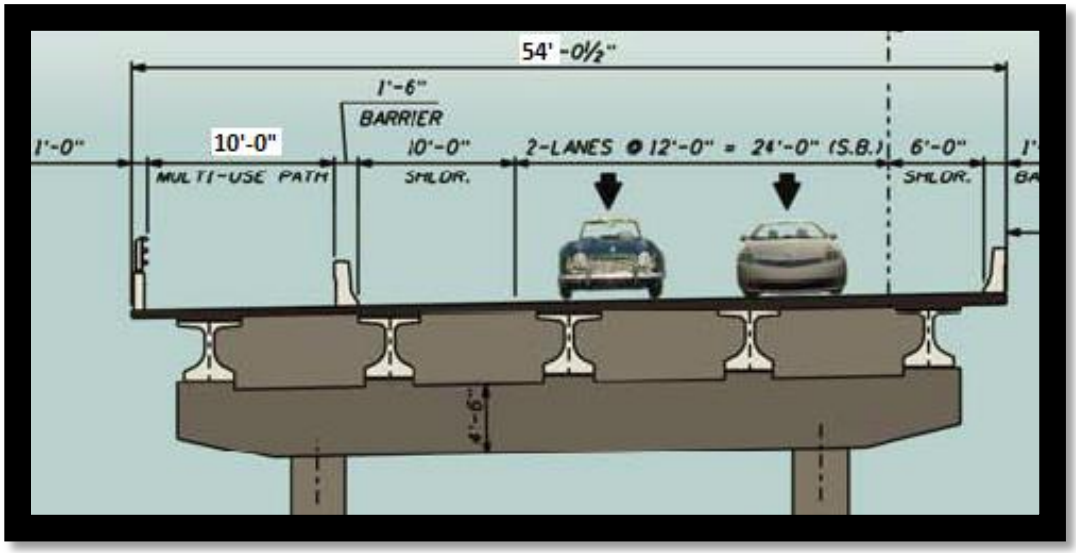

Planned Detail vs. VE Idea Detail Station 257+00

Planned Detail

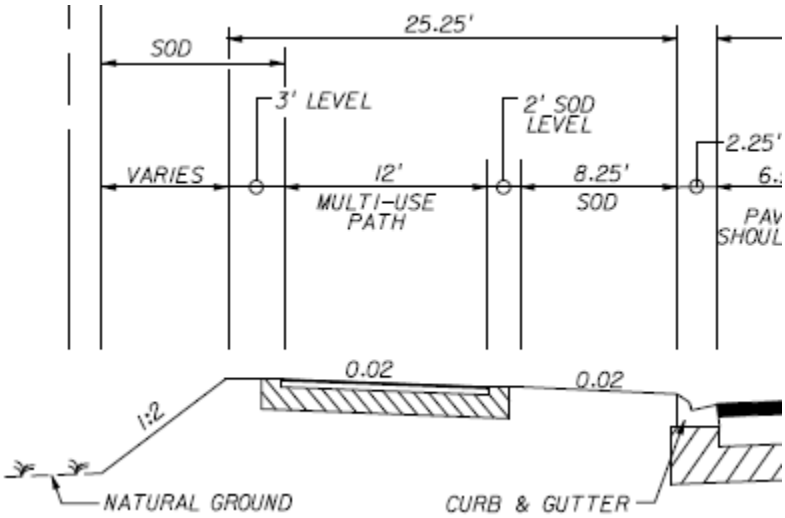

VE Idea Detail

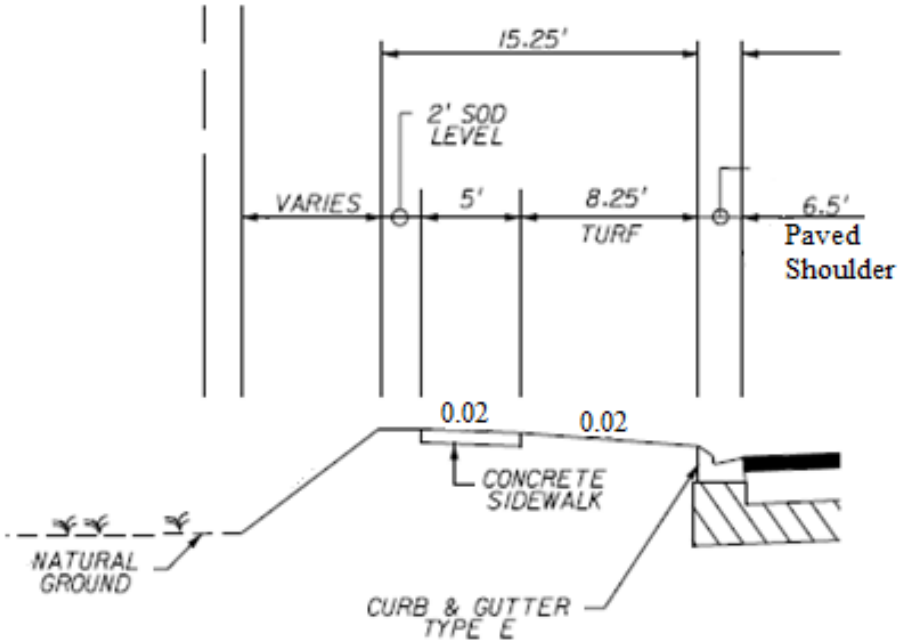

Planned Detail vs. VE Idea Detail Clear Creek Bridge

Clear Creek (Planned)

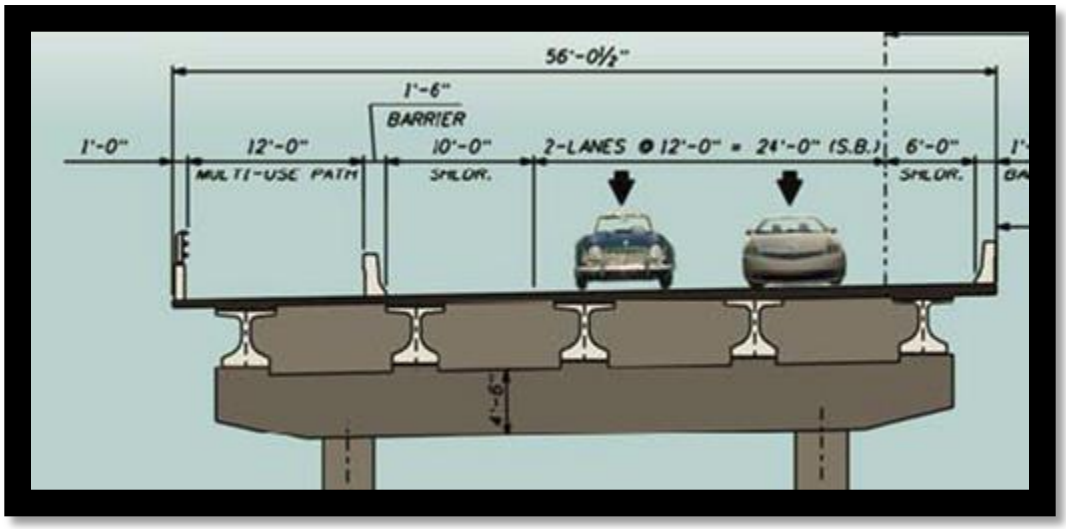

Clear Creek (VE Idea Detail)

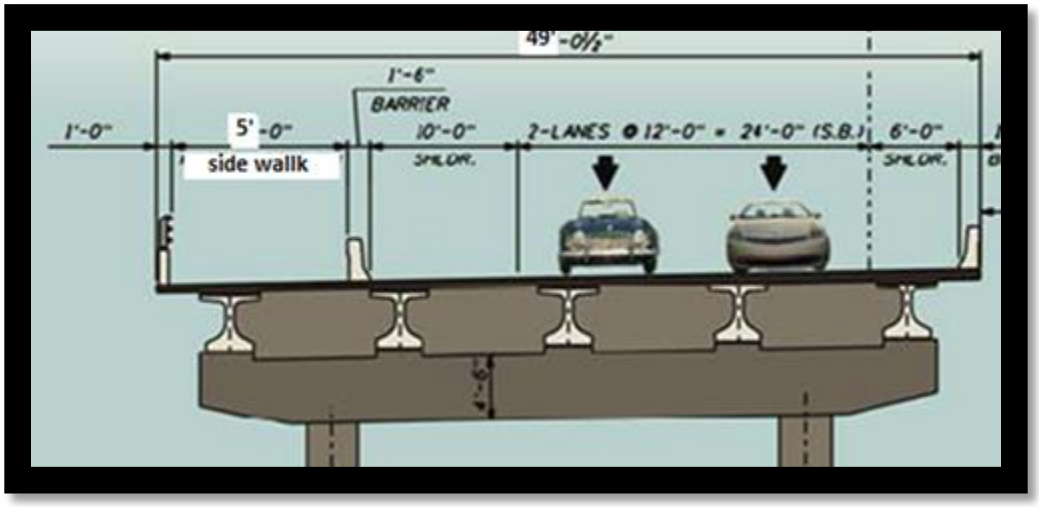

Calculations for Alternate 1 (Urban)

Reduction in Quantities for Alt. 1 Urban Section

Blackwater Creek (5560 feet x 2 feet reduction) = **11,120 SF**

Asphalt 1”= 110 lbs/SY x (1SY/ 9SF) x (1TN/2000 lbs) x 9,800 ft x 2 ft = **120 tons**

Base = (2ft x 9,800 ft)/9 SF/SY= **2,178 SY**

Stabilization = (2 ft x 9,800 ft) / 9 SF/SY = **2178 SY**

Embankment= 22.00’-16.00’ = 6 ft (see typical section sheet 4)

(6ft x 4.5ft (avg. fill height) x 9,800 ft)/27CF/CY= **9,800 CY**

Sod (4 ft x 9,800 ft) / 9 SF/SY = **4356 SY**

Cost Comparison Alternate 1 (Urban)

SR 87 416748-3 *(URBAN) to STA 257+00* **VALUE ENGINEERING IDEA No. 4** **COST COMPARISON SHEET**						
DESCRIPTION	**UNITS**	**UNIT COST**	**Reduced QTY.**	**Reduced COST**	**V.E. QTY.**	**V.E. COST**
Apshalt	SY	$104.35	120	$12,499		$0
Base	SY	$7.60	2178	$16,551		$0
Embankment	CY	$3.96	9800	$38,808		$0
Blackwater Bridge Savings	SF	$126.50	11120	$1,406,680		$0
Stabilization	SY	$2.27	2178	$4,944		$0
Sod	SY	$2.33	4356	$10,148		$0
				$0		$0
SUBTOTAL				**$1,489,630**		**$0**
MOBILIZATION (THIS IS SUB+CONTIN. X % =)		**5.0%**		$78,206		$0
MOT		**2.0%**		$29,793		$0
CONTINGENCIES		**5.0%**		$74,481		$0
CEI		**10.0%**		$167,211		$0
			-	$0		$0
GRAND TOTAL				**$1,839,321**		**$0**
POTENTIAL SAVINGS:				**$1,839,321**		

Calculations for Alternate 1 (Suburban)

Reduction in Quantities for Alt. 1 Suburban Section

Asphalt 1”= 110 lbs/SY x (1SY/ 9SF) x (1TN/2000 lbs) x 340 ft x 2 ft = **4 tons**

Base = (2ft x 340 ft)/9 SF/SY= **76 SY**

Stabilization = (2 ft x 340 ft) / 9 SF/SY = **76 SY**

Embankment= 25.25’-15.25’ = 5 ft (see typical section sheet 4)

(5ft x 4.5ft (avg. fill height) x 340 ft)/27CF/CY= **283 CY**

Sod (4 ft x 340 ft) / 9 SF/SY = **113 SY**

Cost Comparison Alternate 1 (Suburban)

SR 87 416748-3 *(SUBURBAN) to STA 257+00* **VALUE ENGINEERING IDEA No. 4** **COST COMPARISON SHEET**						
DESCRIPTION	**UNITS**	**UNIT COST**	**Reduced QTY.**	**Reduced COST**	**V.E. QTY.**	**V.E. COST**
Apshalt	SY	$104.35	4	$434		$0
Base	SY	$7.60	76	$574		$0
Embankment	CY	$3.96	283	$1,122		$0
Clearcreek Bridge Savings	SF	$126.50	0	$0		$0
Stabilization	SY	$2.27	76	$172		$0
Sod	SY	$2.33	113	$264		$0
				$0		$0
SUBTOTAL				**$2,565**		**$0**
MOBILIZATION (THIS IS SUB+CONTIN. X % =)		**5.0%**		$135		$0
MOT		**2.0%**		$51		$0
CONTINGENCIES		**5.0%**		$128		$0
CEI		**10.0%**		$288		$0
			-	$0		$0
GRAND TOTAL				**$3,168**		**$0**
POTENTIAL SAVINGS:				**$3,168**		

Calculations for Alternate 1

Reduction in Quantities for Alternate 1

Clear Creek Bridge 180 feet x 7 feet reduction = **1,260 SF**

Asphalt 1”= 110 lbs/SY x (1SY/ 9SF) x (1TN/2000 lbs) x 19,635 ft x 12 ft = **1,440 tons**

Base = 12ft + (2 x 4”)/12= (12.667ft x 19,635 ft)/9 SF/SY= **27,635 SY**

Stabilization = 12ft + (2 x 2’) = (16 ft x 19,635 ft) / 9 SF/SY = **34,907 SY**

Embankment= 25.25’-15.25’ = 10 ft (see typical section sheet 4)

(10ft x 4.5ft (avg. fill height) x 19,635 ft)/27CF/CY= **32,725 CY**

Sod (11.25 ft x 19,635 ft) / 9 SF/SY = **24,544 SY**

Increase in Quantities for Alternate 1

Performance Turf (8.25 ft x 19,635 ft) / 9 SF/SY= **17,999 SY**

Sidewalk (5ft x 19,635 ft) / 9 SF/SY = **10,908 SY**

Cost Comparison Alternate 1

SR 87 416748-3 Terminate Multi-Use Path at Heritage Trail add 5' Sidewalk
(ALT 1) **VALUE ENGINEERING IDEA No. 4**
COST COMPARISON SHEET

DESCRIPTION	UNITS	UNIT COST	Reduced QTY.	Reduced COST	Added QTY.	Added COST
Clear Creek Bridge	SF	$126.50	1260	$159,390		$0
Asphalt Multi Use Path	TN	$104.35	1440	$150,254		$0
Base for Path	SY	$7.60	27635	$210,027		$0
Stabilization for Path	SY	$2.27	34907	$79,238		$0
Embankment	CY	$3.96	32725	$129,591		$0
Sod	SY	$2.33	24544	$57,187		$0
Perf. Turf	SY	$0.75		$0	17999	$13,499
Sidewalk	SY	$26.96		$0	10908	$294,089
SUBTOTAL				**$785,687**		**$307,588**
MOBILIZATION (THIS IS SUB+CONTIN. X % =)		**5.0%**		$41,249		$16,148
MOT		**2.0%**		$15,714		$6,152
CONTINGENCIES		**5.0%**		$39,284		$15,379
CEI		**10.0%**		$88,193		$34,527
			-	$0		$0
GRAND TOTAL				**$970,127**		**$379,794**

POTENTIAL SAVINGS: $590,333

Calculations for Alternate 2

Reduction in Quantities for Alternate 2

Clear Creek Bridge (180 feet x 7 feet reduction)/9 SF/SY = **1,260 SY**

Asphalt 1”= 110 lbs/SY x (1SY/ 9SF) x (1TN/2000 lbs) x 24,620 ft x 12 ft =**1,805 tons**

Base = 12ft + (2 x 4”)/12= (12.667ft x 24,620 ft)/9 SF/SY= **34,651 SY**

Stabilization = 12ft + (2 x 2’) = (16 ft x 24,620 ft) / 9 SF/SY = **43,769 SY**

Embankment= 25.25’-15.25’ = 10 ft (see typical section sheet 4)

(10ft x 4.5ft (avg. fill height) x 24,620 ft)/27CF/CY= **41,033 CY**

Sod (11.25 ft x 24,620 ft) / 9 SF/SY = **30,775 SY**

Increase in Quantities for Alternate 2

Performance Turf (8.25 ft x 24,620 ft) / 9 SF/SY= **22,568 SY**

Sidewalk (5ft x 24,620 ft) / 9 SF/SY = **13,678 SY**

Cost Comparison Alternate 2

SR 87 416748-3 Terminate Multi-Use Path at Heritage Trail add 5' Sidewalk
(ALT 2) **VALUE ENGINEERING IDEA No. 4**
COST COMPARISON SHEET

DESCRIPTION	UNITS	UNIT COST	Reduced QTY.	Reduced COST	Added QTY.	Added COST
Clear Creek Bridge	SF	$126.50	1260	$159,390		$0
Asphalt Multi Use Path	TN	$104.35	1805	$188,400		$0
Base for Path	SY	$7.60	34651	$263,350		$0
Stabilization for Path	SY	$2.27	43769	$99,355		$0
Embankment	CY	$3.96	41033	$162,492		$0
Sod	SY	$2.33	30775	$71,706		$0
Perf. Turf	SY	$0.75		$0	22568	$16,926
Sidewalk	SY	$26.96		$0	13678	$368,753
SUBTOTAL				**$944,693**		**$385,679**
MOBILIZATION (THIS IS SUB+CONTIN. X % =)		**5.0%**		$49,596		$20,248
MOT		**2.0%**		$18,894		$7,714
CONTINGENCIES		**5.0%**		$47,235		$19,284
CEI		**10.0%**		$106,042		$43,292
			-	$0		$0
GRAND TOTAL				**$1,166,460**		**$476,217**

POTENTIAL SAVINGS: $690,243

Planned Detail vs. VE Idea Detail (Urban)

Planned Detail Urban Section

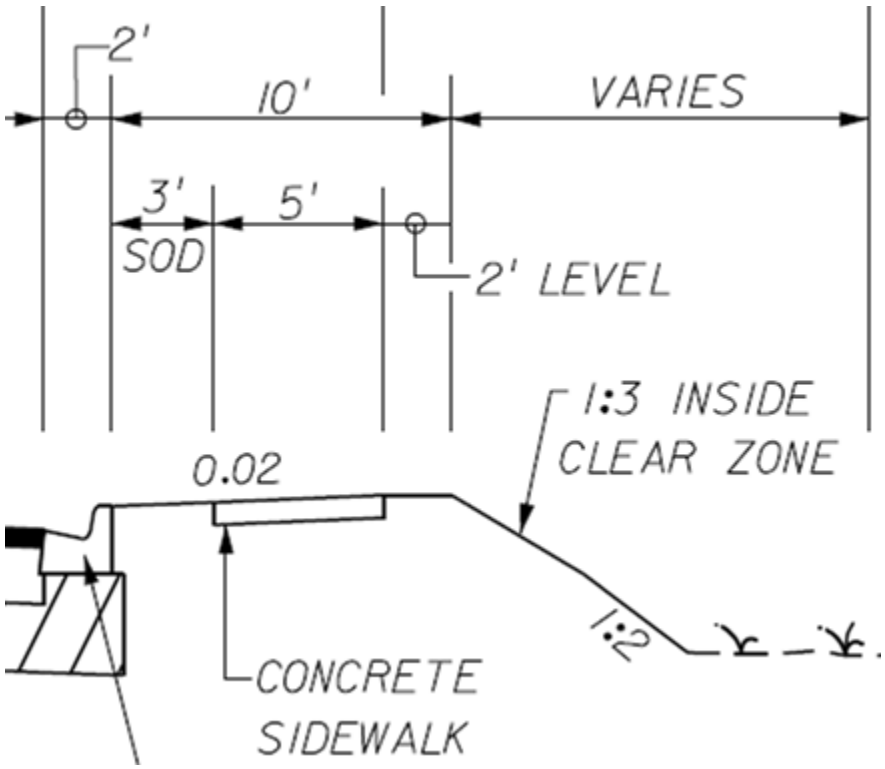

Planned Detail vs. VE Idea Detail (Suburban)

Planned Detail Suburban Section

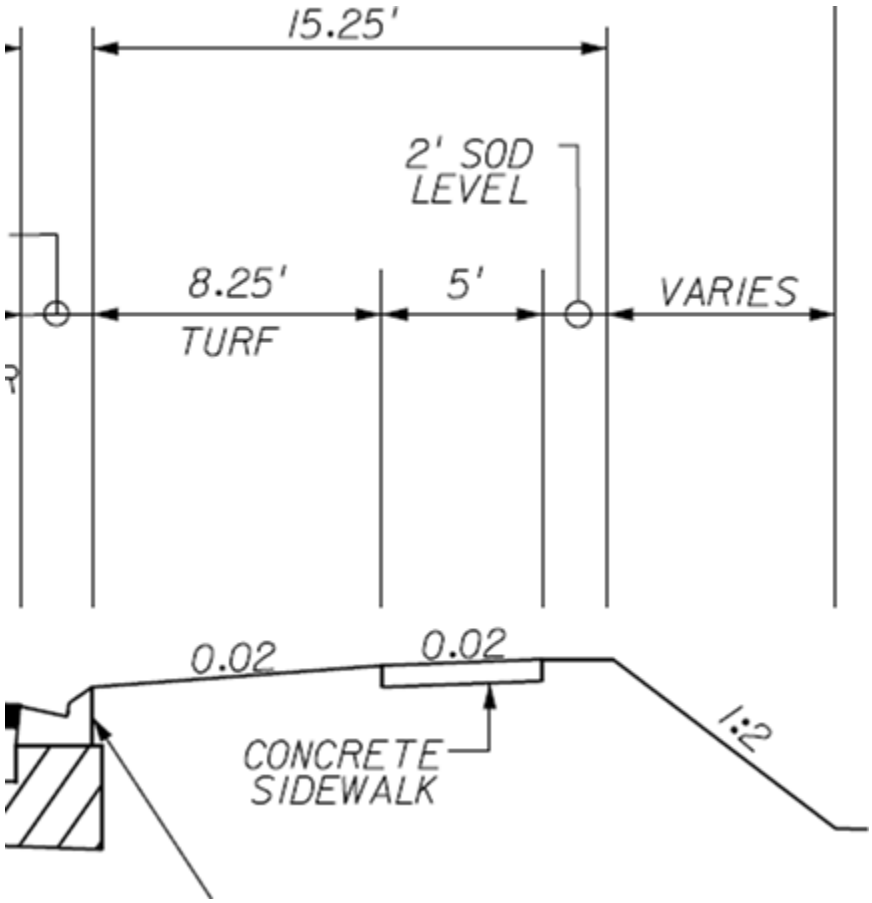

Planned Detail vs. VE Idea Detail

VE Idea Detail for Urban and Suburban Sections

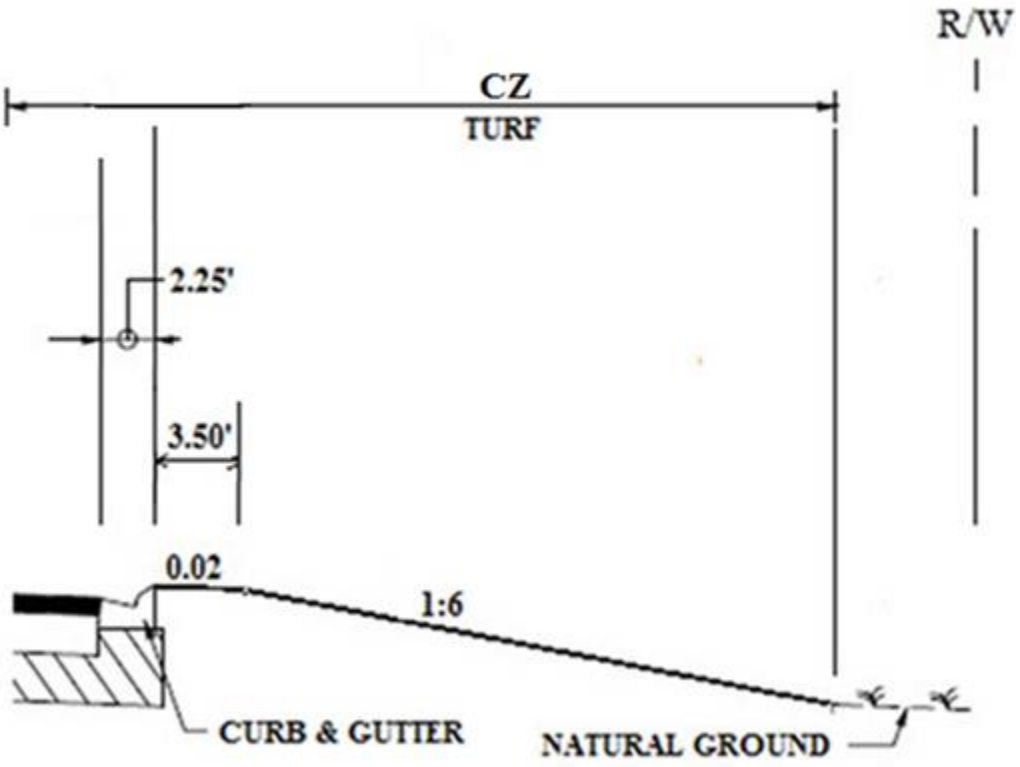

Calculations for Alternate 1 (Urban)

Reduction in Quantities for Alt. 1 Urban Section

Blackwater Creek (5,560 feet x 6 feet reduction) = **33,360 SF**

Sidewalk (13,920 feet x 5 feet reduction)/9 SF/SY = **7,733 SY**

Embankment= 12.68 SF (See Urban CADD Drawing)

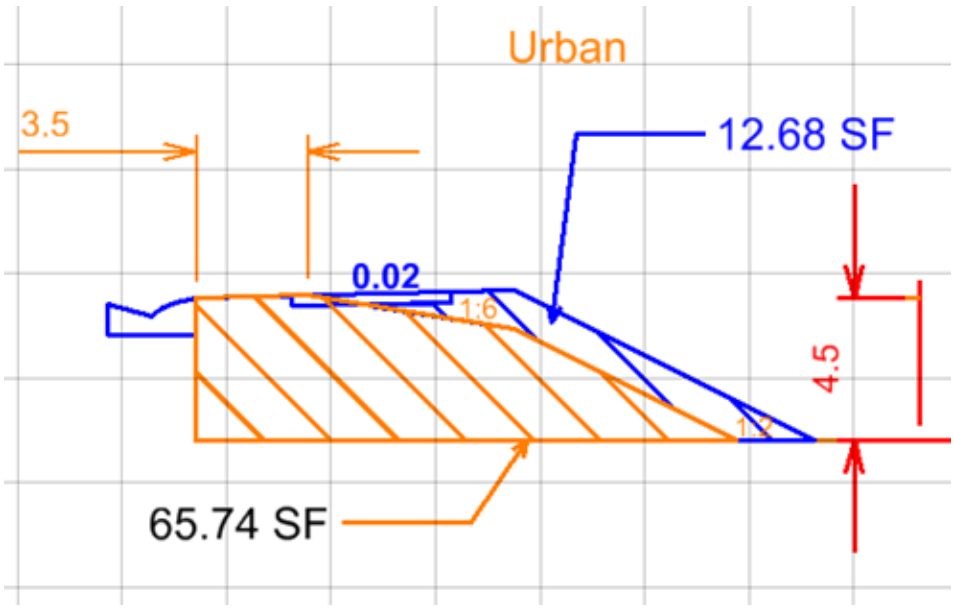

(12.68) x 13,920 ft)/27CF/CY= **6,537 CY**

Sod (2 ft x 13,920 ft) / 9 SF/SY = **3,093 SY**

Turf (7 ft x 13,920 ft) / 9 SF/SY = **10,827 SY**

Calculations for Alternate 1 (Urban)

<u>Reduction in Quantities for Alt. 1 Suburban Section</u>

Clearwater Creek (180 feet x 6 feet reduction) = **1,080 SF**

Sidewalk (17,989 feet x 5 feet reduction)/9 SF/SY = **9,994 SY**

Embankment= 26.67 SF (See Suburban CADD Drawing)

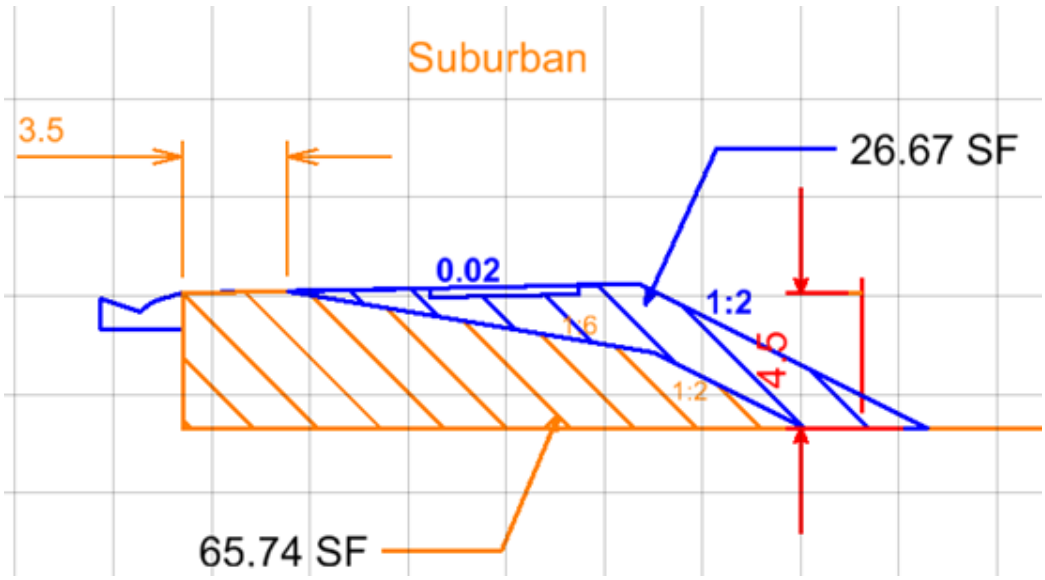

(26.67) x 17,989 ft)/27CF/CY= **17,769 CY**

Sod (2 ft x 17,989 ft) / 9 SF/SY = **3,998 SY**

Turf (7 ft x 17,989 ft) / 9 SF/SY = **13,991 SY**

Cost Comparison Alternate 1 (Deletion of 5' Sidewalk)

SR 87 416748-3 (Delete 5' Sidewalk entire project East side)
(ALT 1) **VALUE ENGINEERING IDEA No. 6**
COST COMPARISON SHEET

DESCRIPTION	UNITS	UNIT COST	Reduced QTY.	Reduced COST	Added QTY.	Added COST
5' Sidewalk (East Side - Urban & Suburban)	SY	$26.96	17,727	$477,926		$ -
Bridges (6' width)	SF	$126.50	34,440	$4,356,660		$ -
Embankment	CY	$3.96	24,306	$96,253		$ -
Performance Turf, Sod	SY	$2.33	7,091	$16,522		$ -
				$0		$ -
Performance Turf	SY	$0.75		$0	24818	$ 18,614
				$0		$ -
				$0		$ -
SUBTOTAL				**$4,947,361**		**$ 18,614**
MOBILIZATION (THIS IS SUB+CONTIN. X % =)		**5.0%**		$259,736		$ 977
MOT		**2.0%**		$98,947		$ 372
CONTINGENCIES		**5.0%**		$247,368		$ 931
CEI		**10.0%**		$555,341		$ 2,089
			-	$0		$ -
GRAND TOTAL				**$6,108,754**		**$ 22,983**

POTENTIAL SAVINGS: $6,085,771

Calculations for Alternate 2 (Urban)

Reduction in Quantities for Alt. 2 Urban Section

Blackwater Creek (5,560 feet x 6 feet reduction) = **33,360 SF**

Sidewalk (13,920 feet x 5 feet reduction)/9 SF/SY = **7,733 SY**

Embankment= 12.68 SF (See Urban CADD Drawing)

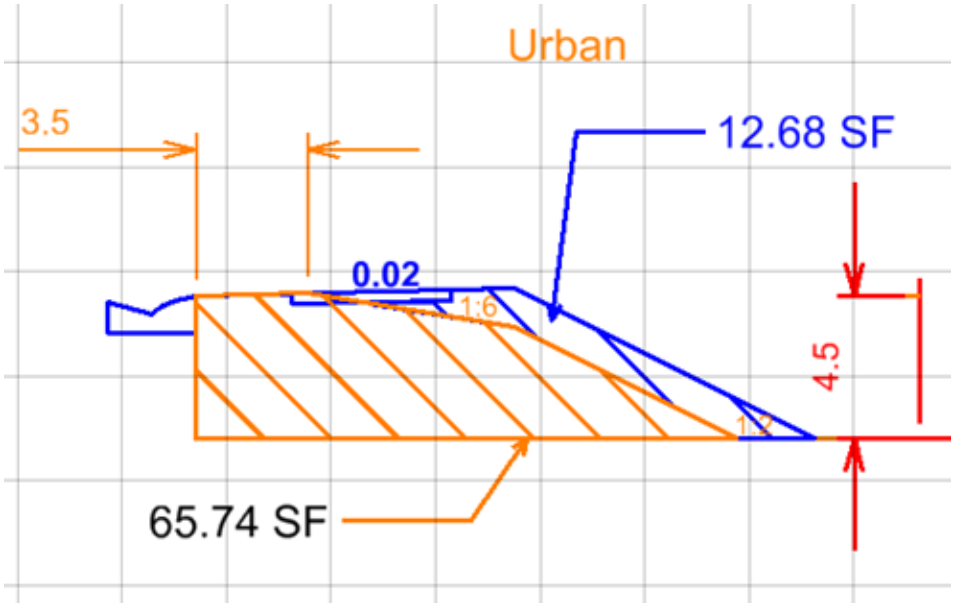

(12.68) x 13,920 ft)/27CF/CY= **6,537 CY**

Sod (2 ft x 13,920 ft) / 9 SF/SY = **3,093 SY**

Turf (7 ft x 13,920 ft) / 9 SF/SY = **10,827 SY**

Calculations for Alternate 2 (Urban)

Reduction in Quantities for Alt. 2 Suburban Section

Clearwater Creek (180 feet x 6 feet reduction) = **1,080 SF**

Sidewalk (20,904 feet x 5 feet reduction)/9 SF/SY = **11,613 SY**

Embankment= 26.67 SF (See Suburban CADD Drawing)

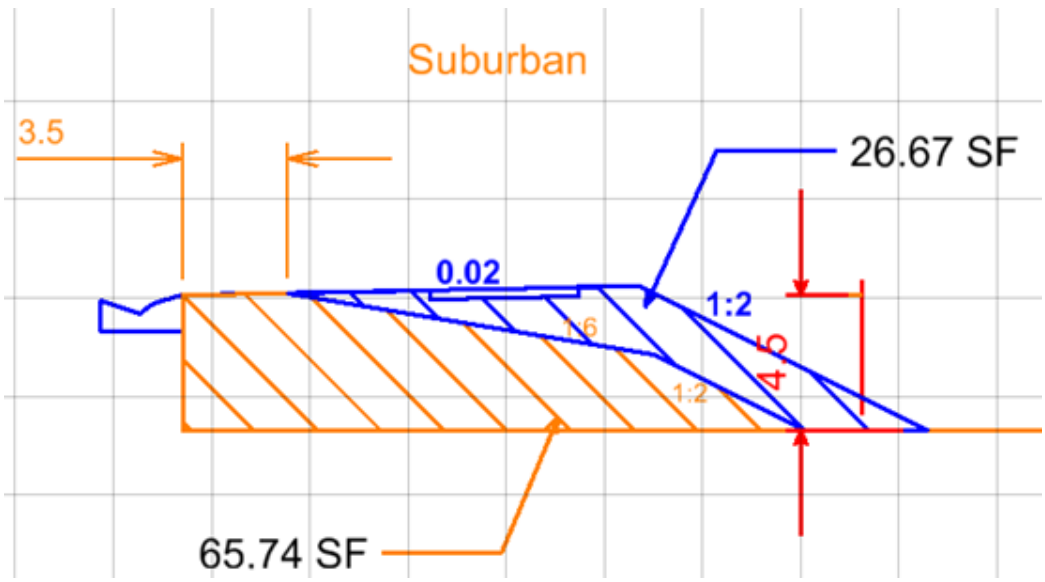

(26.67) x 20,904 ft)/27CF/CY= **20,649 CY**

Sod (2 ft x 20,904 ft) / 9 SF/SY = **4,645 SY**

Turf (7 ft x 20,904 ft) / 9 SF/SY = **16,259 SY**

Cost Comparison Alternate 2 (Deletion of 5' Sidewalk)

SR 87 416748-3 (Delete 5' Sidewalk entire project East side)
(ALT 2) **VALUE ENGINEERING IDEA No. 6**
COST COMPARISON SHEET

DESCRIPTION	UNITS	UNIT COST	Reduced QTY.	Reduced COST	Added QTY.	Added COST
5' Sidewalk (East Side - Urban & Suburban)	SY	$26.96	19,347	$521,586		$ -
Bridges (6' width)	SF	$126.50	34,440	$4,356,660		$ -
Embankment	CY	$3.96	27,186	$107,656		$ -
Performance Turf, Sod	SY	$2.33	7,739	$18,031		$ -
				$0		$ -
Performance Turf	SY	$0.75		$0	27085	$ 20,314
				$0		$ -
				$0		$ -
SUBTOTAL				**$5,003,933**		**$ 20,314**
MOBILIZATION (THIS IS SUB+CONTIN. X % =)		**5.0%**		$262,706		$ 1,066
MOT		**2.0%**		$100,079		$ 406
CONTINGENCIES		**5.0%**		$250,197		$ 1,016
CEI		**10.0%**		$561,691		$ 2,280
			-	$0		$ -
GRAND TOTAL				**$6,178,606**		**$ 25,083**

POTENTIAL SAVINGS: $6,153,523

VE Idea 8

This idea is to build both Blackwater and Clear Creek bridges on the eastern alignment (north bound lanes) with a five foot sidewalk and one foot railing. However, the five foot sidewalk will not be built for the rest of the project until a future date when the area is developed and sidewalk is needed. Therefore, this idea calculates the cost savings for deletion of the five foot sidewalk on the east side of the north bound lanes for the entire length of the project with the only exception being the bridges at Blackwater River and Clear Creek.

.

Planned Detail vs. VE Idea Detail (Urban)

Planned Detail Urban Section

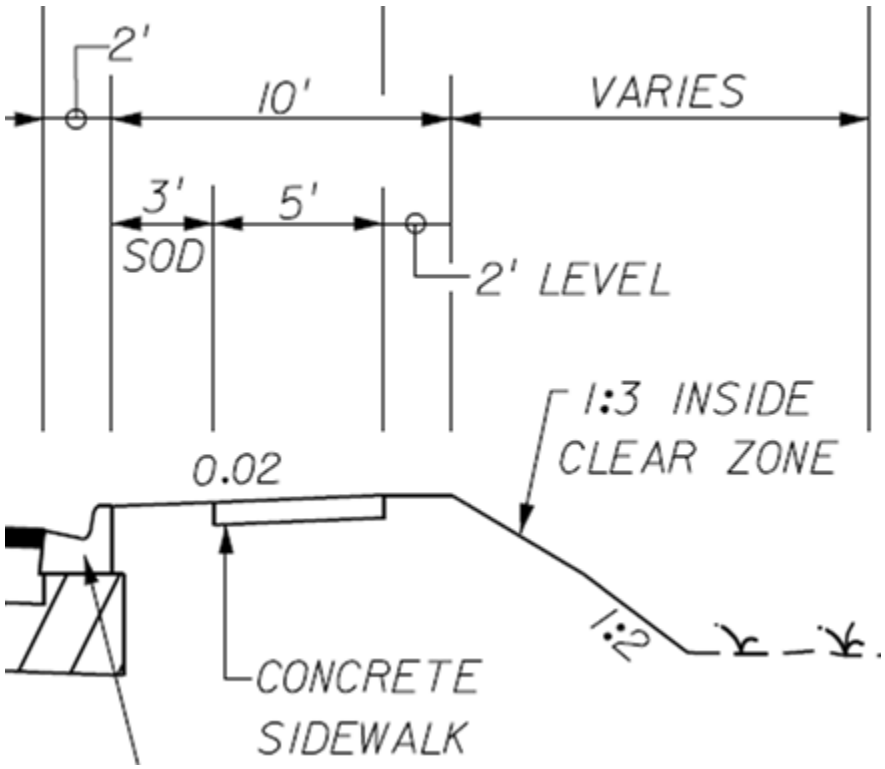

Planned Detail vs. VE Idea Detail (Suburban)

Planned Detail Suburban Section

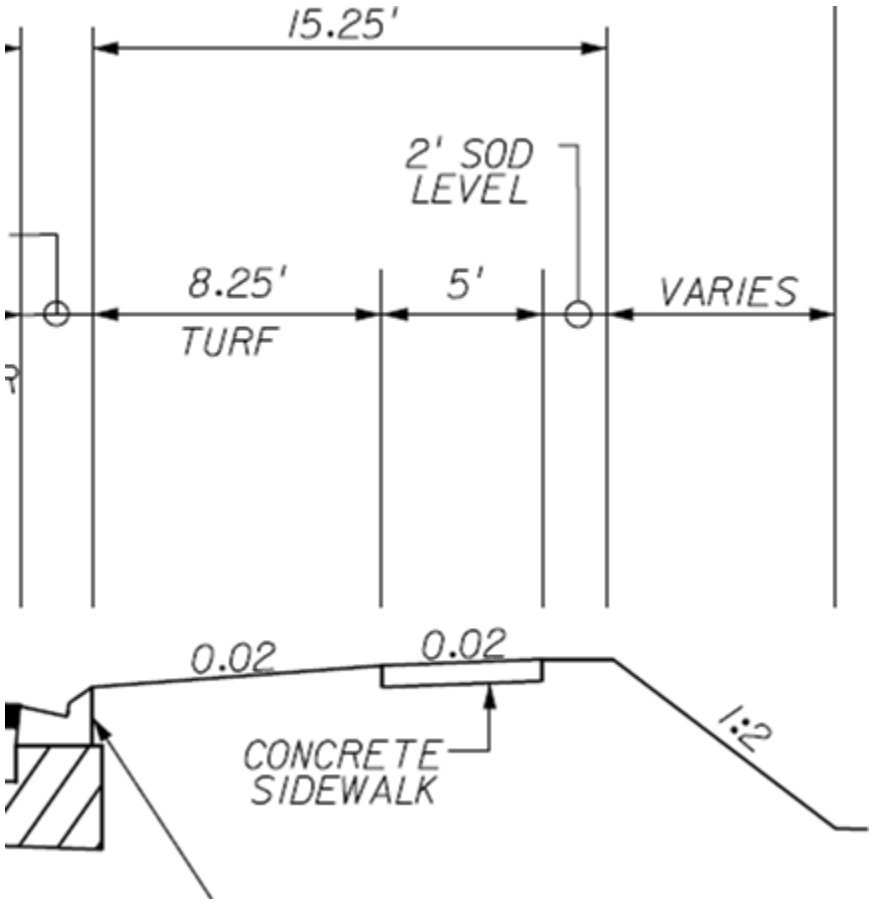

Planned Detail vs. VE Idea Detail

VE Idea Detail for Urban and Suburban Sections

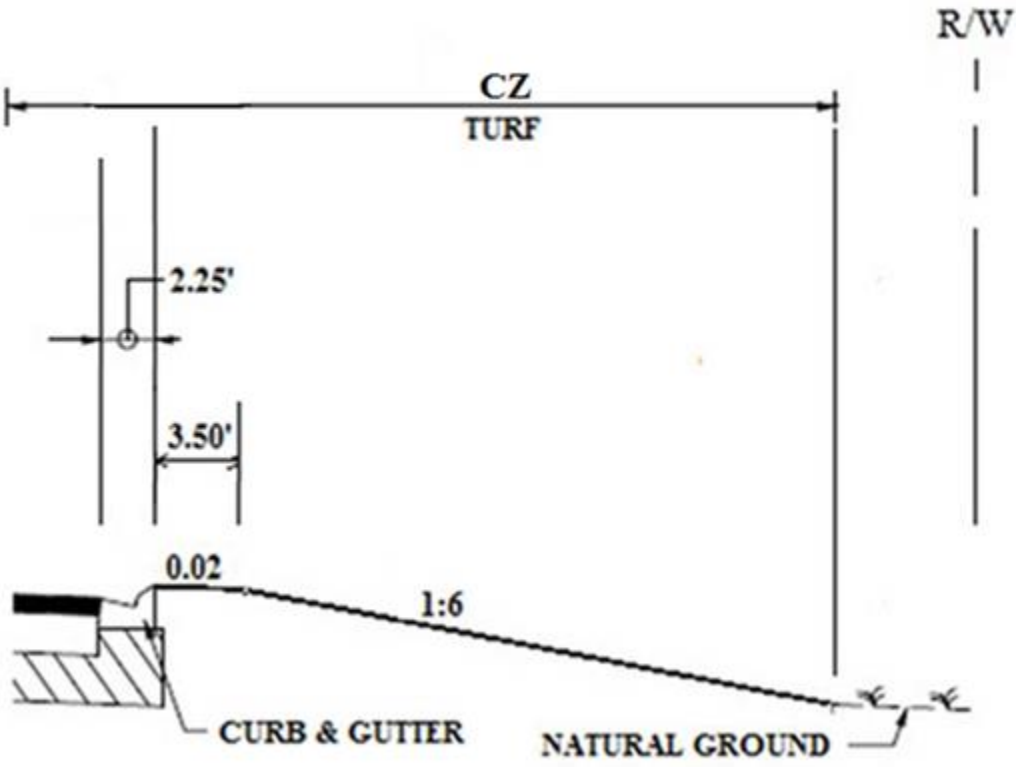

Calculations for Alternate 1 (Urban)

Reduction in Quantities for Alt. 1 Urban Section

Sidewalk (13,920 feet x 5 feet reduction)/9 SF/SY = **7,733 SY**

Embankment= 12.68 SF (See Urban CADD Drawing)

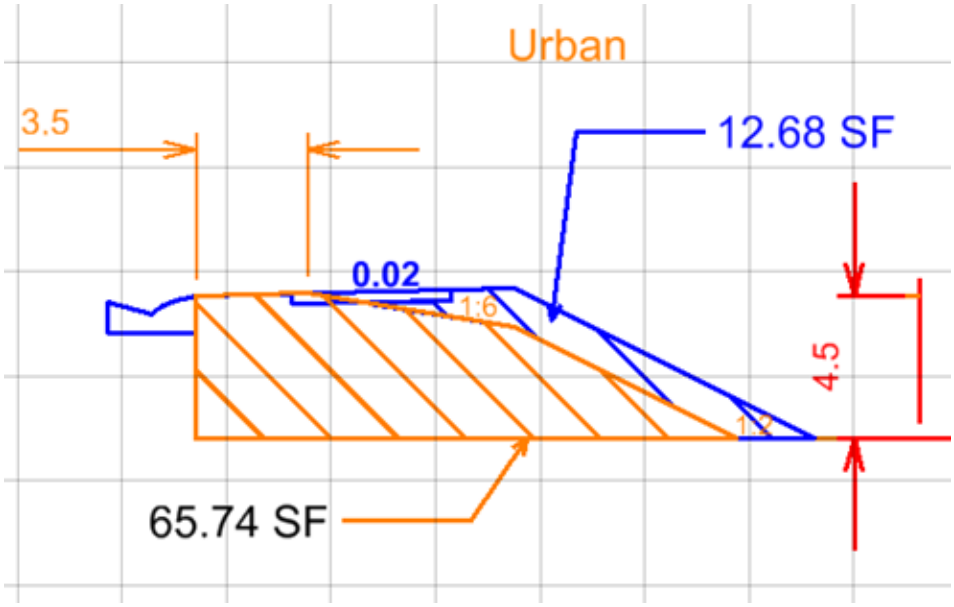

(12.68) x 13,920 ft)/27CF/CY= **6,537 CY**

Sod (2 ft x 13,920 ft) / 9 SF/SY = **3,093 SY**

Turf (7 ft x 13,920 ft) / 9 SF/SY = **10,827 SY**

Calculations for Alternate 1 (Urban)

Reduction in Quantities for Alt. 1 Suburban Section

Sidewalk (17,989 feet x 5 feet reduction)/9 SF/SY = **9,994 SY**

Embankment= 26.67 SF (See Suburban CADD Drawing)

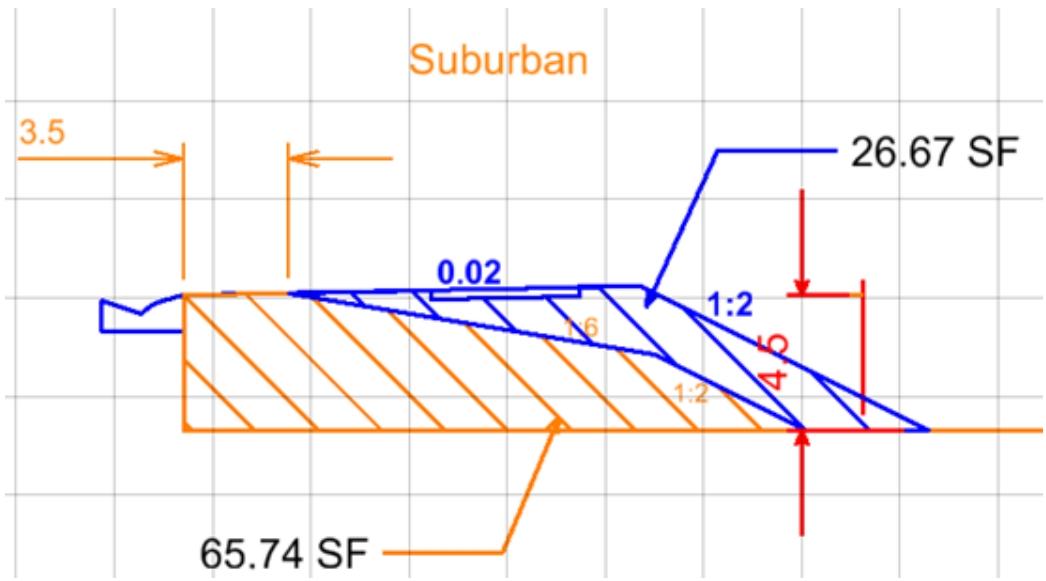

(26.67) x 17,989 ft)/27CF/CY= **17,769 CY**

Sod (2 ft x 17,989 ft) / 9 SF/SY = **3,998 SY**

Turf (7 ft x 17,989 ft) / 9 SF/SY = **13,991 SY**

Cost Comparison Alternate 1 (Deletion of 5' Sidewalk, except bridges)

SR 87 416748-3 (Delete 5' Sidewalk East side, except bridges)
(ALT 1) **VALUE ENGINEERING IDEA No. 8**
COST COMPARISON SHEET

DESCRIPTION	UNITS	UNIT COST	Reduced QTY.	Reduced COST	Added QTY.	Added COST
5' Sidewalk (East Side - Urban & Suburban)	SY	$26.96	17,727	$477,926		$ -
Embankment	CY	$3.96	24,306	$96,253		$ -
Performance Turf, Sod	SY	$2.33	7,091	$16,522		$ -
				$0		$ -
Performance Turf	SY	$0.75		$0	24818	$ 18,614
				$0		$ -
				$0		$ -
SUBTOTAL				**$590,701**		**$ 18,614**
MOBILIZATION (THIS IS SUB+CONTIN. X % =)		**5.0%**		$31,012		$ 977
MOT		**2.0%**		$11,814		$ 372
CONTINGENCIES		**5.0%**		$29,535		$ 931
CEI		**10.0%**		$66,306		$ 2,089
			-	$0		$ -
GRAND TOTAL				**$729,368**		**$ 22,983**

POTENTIAL SAVINGS: $706,385

Calculations for Alternate 2 (Urban)

Reduction in Quantities for Alt. 2 Urban Section

Sidewalk (13,920 feet x 5 feet reduction)/9 SF/SY = **7,733 SY**

Embankment= 12.68 SF (See Urban CADD Drawing)

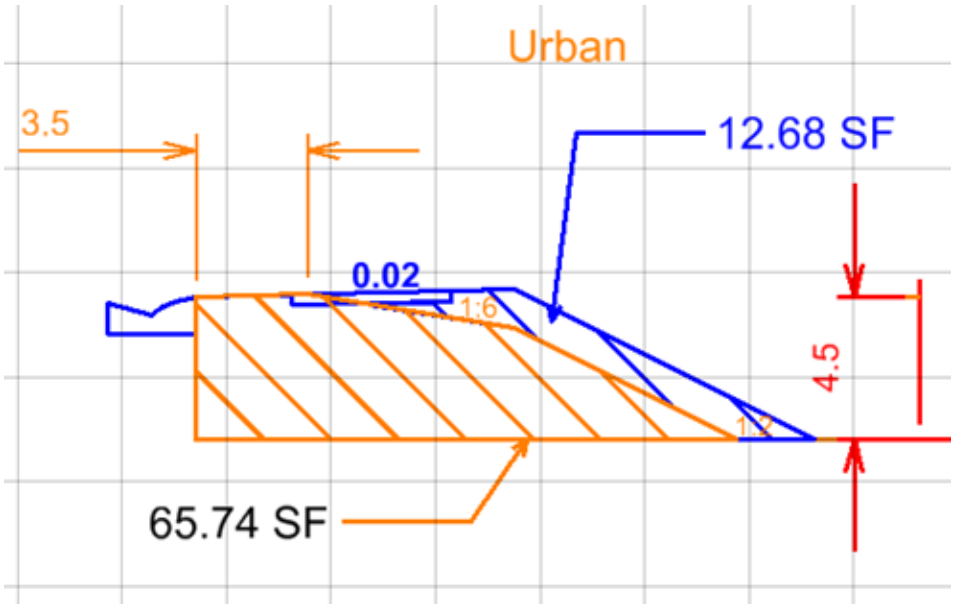

(12.68) x 13,920 ft)/27CF/CY= **6,537 CY**

Sod (2 ft x 13,920 ft) / 9 SF/SY = **3,093 SY**

Turf (7 ft x 13,920 ft) / 9 SF/SY = **10,827 SY**

Calculations for Alternate 2 (Urban)

Reduction in Quantities for Alt. 2 Suburban Section

Sidewalk (20,904 feet x 5 feet reduction)/9 SF/SY = **11,613 SY**

Embankment= 26.67 SF (See Suburban CADD Drawing)

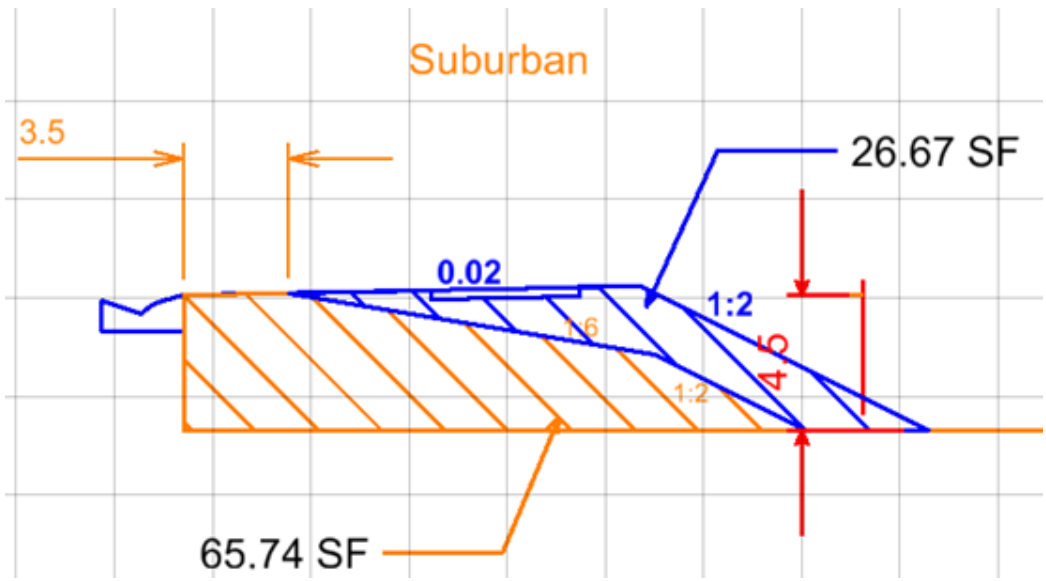

(26.67) x 20,904 ft)/27CF/CY= **20,649 CY**

Sod (2 ft x 20,904 ft) / 9 SF/SY = **4,645 SY**

Turf (7 ft x 20,904 ft) / 9 SF/SY = **16,259 SY**

Cost Comparison Alternate 2 (Deletion of 5' Sidewalk, except bridges)

SR 87 416748-3 (Delete 5' Sidewalk East side, except bridges)
(ALT 2) **VALUE ENGINEERING IDEA No. 8**
COST COMPARISON SHEET

DESCRIPTION	UNITS	UNIT COST	Reduced QTY.	Reduced COST	Added QTY.	Added COST
5' Sidewalk (East Side - Urban & Suburban)	SY	$26.96	19,347	$521,586		$ -
Embankment	CY	$3.96	27,186	$107,656		$ -
Performance Turf, Sod	SY	$2.33	7,739	$18,031		$ -
				$0		$ -
Performance Turf	SY	$0.75		$0	27085	$ 20,314
				$0		$ -
				$0		$ -
SUBTOTAL				**$647,273**		**$ 20,314**
MOBILIZATION (THIS IS SUB+CONTIN. X % =)		**5.0%**		$33,982		$ 1,066
MOT		**2.0%**		$12,945		$ 406
CONTINGENCIES		**5.0%**		$32,364		$ 1,016
CEI		**10.0%**		$72,656		$ 2,280
			-	$0		$ -
GRAND TOTAL				**$799,220**		**$ 25,083**

POTENTIAL SAVINGS: $774,137

VE Idea 9

VE Idea 9 proposes to use a rural typical section and open drainage system from station 253+60 to station 441+89.50 in lieu of the suburban typical and closed drainage system. This will reduce pipe items, embankment, sidewalk, sod, etc. A recent change as a result of House Bill 599 allows co-mingling water without having to treat off site water.

House Bill 599

(6) It is the intent of the Legislature that the governing board or department exercise flexibility in the permitting of stormwater management systems associated with the construction or alteration of systems serving state transportation projects and facilities. Because of the unique limitations of linear facilities, the governing board or department shall balance the expenditure of public funds for stormwater treatment for state transportation projects and facilities with the benefits to the public in providing the most cost-efficient and effective method of achieving the treatment objectives. In consideration thereof, the governing board or department shall allow alternatives to onsite treatment, including, but not limited to, regional stormwater treatment systems. The Department of Transportation is responsible for treating stormwater generated from state transportation projects but is not responsible for the abatement of pollutants and flows entering its stormwater management systems from offsite sources; however, this subsection does not prohibit the Department of Transportation from receiving and managing such pollutants and flows when cost effective and prudent. Further, in association with right-of-way acquisition for state transportation projects, the Department of Transportation is responsible for providing stormwater treatment and attenuation for the acquired right-of-way but is not responsible for modifying permits for adjacent lands affected by right-of-way acquisition when it is not the permittee. The governing board or department may establish, by rule, specific criteria to implement the management and treatment alternatives and activities under this subsection.

Planned Detail vs. VE Idea Detail

Planned (Suburban Typical)

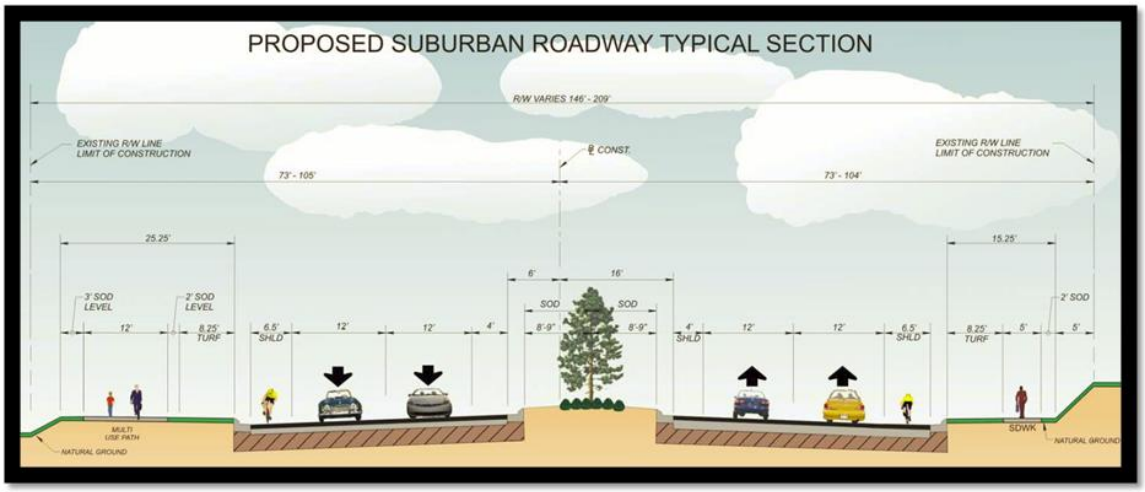

VE Idea (Rural Typical)

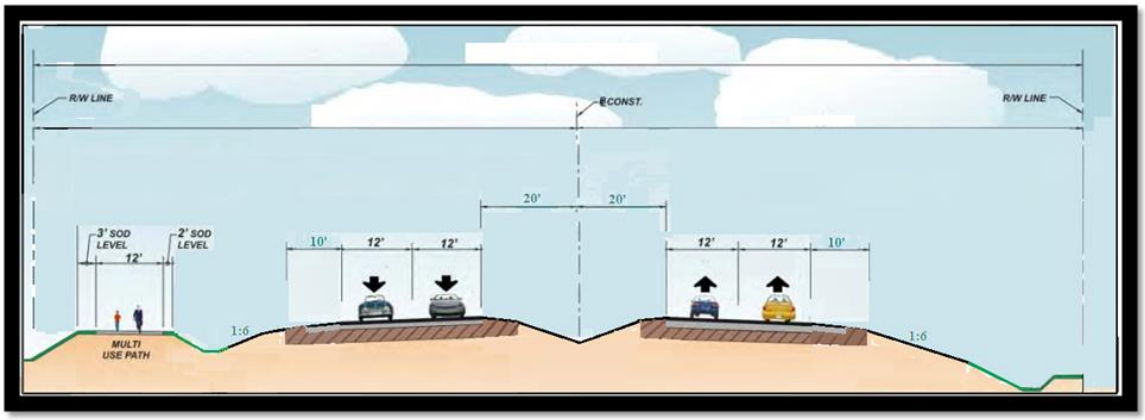

Cost Comparison for Alternate 1

SR 87 416748-3 (Rural)
(ALT 1) **VALUE ENGINEERING IDEA No. 9**
COST COMPARISON SHEET

DESCRIPTION	UNITS	UNIT COST	Reduced QTY.	Reduced COST	Added QTY.	Added COST
Clearing & Grubbing	AC	$7,500.00			30	$226,950
Embankment	CY	$3.96	401,569	$1,590,213		
Stabilization	SY	$2.27			9792	$22,227
Optional Base 9	SY	$16.29	41,175	$670,742		
Superpave Asphaltic Traffic C	TN	$85.87	7,250	$622,521		
Aspahltic Concrete FC	TN	$104.59	7,893	$825,523		
Painted Pavement Markings, White (Bike Lanes)	EA	$46.80	80	$3,744		
Type E Curb & Gutter	LF	$12.01	18,830	$226,149		
Type E Curb & Gutter	LF	$12.01	18,830	$226,149		
Sidewalk (4")	SY	$26.96	10,461	$282,033		
Performance Turf	SY	$0.75			49167	$36,876
Sediment Barrier	LF	$1.61			12298	$19,800
Inlet Protection System	EA	$109.72	160	$17,555		
Litter Removal	AC	$26.79			80	$2,134
Mowing	AC	$59.57			80	$4,746
Optional Base 4	SY	$12.86			22303	$286,819
Superpave Aspahltic Concrete	TN	$85.87			1151	$98,813
Superpave Asphaltic Traffic C	TN	$85.87			837	$71,864
Inlet Curb, Type P-5<10	EA	$2,997.62	129	$386,693		
Inlet Curb, Type J-5<10	EA	$4,476.17	36	$161,142		

Cost Comparison for Alternate 1

SR 87 416748-3 (Rural) *(ALT 1)* **VALUE ENGINEERING IDEA No. 9** **COST COMPARISON SHEET**						
DESCRIPTION	**UNITS**	**UNIT COST**	**Reduced QTY.**	**Reduced COST**	**Added QTY.**	**Added COST**
Inlets, DT Bot,Type C,<10	EA	$2,007.47	18	$36,134		
Manholes, P-7,<10	EA	$2,794.43	18	$50,300		
Pipe Culvert 24"S/CD	LF	$44.17	8,209	$362,592		
Pipe Culvert 36"S/CD	LF	$70.33			208	$14,629
Pipe Culvert 48"S/CD	LF	$99.78	17,832	$1,779,277		
Performance Turf	SY	$0.75			10088	$7,566
Inlets, DT Bot,Type E,<10	EA	$2,690.73			22	$59,196
Pipe Culvert 24"SD	EA	$52.82			2856	$150,854
Mitered End Section	EA	$952.07			143	$136,146
Concrete Ditch Pavement	SY	$47.20			7133	$336,659
Concrete Class IV Culverts	CY	$594.74			80	$47,282
Reinforced Steel -Roadway	LB	$0.68			9480	$6,446
Concrete Class IV Culverts	CY	$594.74			25	$14,571
Reinforced Steel -Roadway	LB	$0.68			3025	$2,057
Single Sign Post Less 12 SF	AS	$277.85	78	$21,672		
Single Sign Post 12-20 SF	AS	$838.64			78	$65,414
Multi Post Sign 51-100	AS	$5,135.40			14	$71,896
Lighting Conductors, NO. 4-2	LF	$2.29	18,862	$43,193		

Cost Comparison for Alternate 1

SR 87 416748-3 (Rural) *(ALT 1)* **VALUE ENGINEERING IDEA No. 9** **COST COMPARISON SHEET**						
DESCRIPTION	**UNITS**	**UNIT COST**	**Reduced QTY.**	**Reduced COST**	**Added QTY.**	**Added COST**
Lighting Conductors, Underground	LF	$3.78	3,830	$14,478		
Lighting-Conduit, Under Existing Pavement	LF	$12.67	2,457	$31,132		
Light Pole Comp	EA	$8,533.75	75.00	$640,031		
Light Pole COMP WS130, 45'	EA	$3,678.21			75	$275,866
SUBTOTAL				**$7,991,273**		**$1,958,809**
MOBILIZATION (THIS IS SUB+CONTIN. X % =)		**5.0%**		$419,542		$102,837
MOT		**2.0%**		$159,825		$39,176
CONTINGENCIES		**5.0%**		$399,564		$97,940
CEI		**10.0%**		$897,020		$219,876
			-	$0		$0
GRAND TOTAL				**$9,867,224**		**$2,418,640**
POTENTIAL SAVINGS:				**$7,448,584**		

Design Observations

Irrigation

Opportunity to install irrigation system in the original project rather than adding it later.

Muck Areas

Flood plain areas have a potential for muck which needs to be considered in the design.

Right-of-Way Cost

Due to the area being undeveloped for this new alignment, Right-of-Way cost are relatively low; therefore, project design is not limited by Right-of-Way cost.

Bobby Brown Road

Opportunity exist for creating direct connection with US 90 rather than creating a longer route to SR 87 North. The city would have to give up three existing railroad crossing in order to add a new crossing.

If a direct connection is not made between Bobby Brown Road and US 90, a full median opening should be designed at SR 87 north and the new Bobby Brown connection. This will allow traffic on Bobby Brown Road to turn left on SR 87 south.

Summary

Summary of All Ideas

VE IDEA	$ Savings Alternate 1	Days
1. End Multi-Use Path at Heritage Trail, Add 5' Sidewalk	$590,333	94
2. End Multi-Use Path at Heritage Trail, No Sidewalk	$1,125,208	126
3. Reduce Multi-Use Path Width from 12' to 10' Entire Project	$2,083,905	132
4. 10' Path to Heritage Trail, Add 5' Sidewalk	$2,432,822	175
5. 10' Path to Heritage Trail, No Sidewalk	$2,967,697	207
6. Eliminate 5' Sidewalk East Side Entire Project	$6,085,771	203
7. VE 4 + VE 6	$8,518,593	378
8. Eliminate 5' Sidewalk East Side, Except on Bridges	$706,385	37
9. Use Rural Typical in lieu of suburban	$7,448,584	83

Summary of Approved Ideas

VE IDEA	$ Savings Alternate 1
2. End Multi-Use Path at Heritage Trail, No Sidewalk	$759,710
6. Eliminate 5' Sidewalk East Side Entire Project	$5,279,604
9. Use Rural Typical in lieu of Suburban	$7,448,584
Total Savings Approved by Management	$13,487,898

Value Engineering Resolution Meeting Decisions

A Value Engineering Resolution Meeting was held on January 30, 2013 with District Three management. The District Secretary and Directors approved VE 2, VE 6 and VE 9 with slight changes as described below.

VE Idea 2

The twelve foot multi-use path will connect the old SR 1 brick road to the Blackwater Heritage State Trail and will terminate at station 257+00. There will be no multi-use trail from station 257+00 for the remainder of the project. However, management requested a change to VE Idea 2 as proposed to include the additional width necessary to construct a twelve foot mutli-use path on the Clear Creek Bridge. Management also requested the barrier wall to be placed at the outer edge of the bridge. The bridge can be retrofitted with another barrier to separate the multi-use path for the shoulder at a future date in the event the multi-use path is constructed. Changes requested by management reduced the savings for VE Idea 2 from $1,125,208 to $759,710 for a net difference of $365,498.

VE Idea 6

VE Idea 6 eliminates the five foot sidewalk on the east side of the future north bound roadway. This reduces sidewalk, embankment, sod and bridge width. The sidewalk can be built at a later date when the area is developed. Changes requested by management reduced the savings for VE Idea 6 from $6,085,771 to $5,279,604 for a net difference of $806,167. The reduced savings is due to VE Idea 9 already including the savings for removal of the five foot sidewalk for the rural section which is 3.556 miles in length.

VE Idea 9

This idea utilizes a rural typical section in lieu of the suburban section. This idea also includes an open drainage system in lieu of a closed drainage system. In addition, House Bill 599 allowing comingling of water will reduce fill heights significantly from the original design. The total savings for this idea is $7,448,584.

The total savings of all ideas approved by District Three Management is $13,487,898.

Cost Comparison for VE Idea 2 Revised

SR 87 416748-3 Terminate Multi-Use Path at Heritage Trail
(ALT 1) **VALUE ENGINEERING IDEA No. 2**
COST COMPARISON SHEET

DESCRIPTION	UNITS	UNIT COST	Reduced QTY.	Reduced COST	Added QTY.	Added COST
Asphalt Multi Use Path	TN	$104.35	1440	$150,254		$0
Base for Path	SY	$7.60	27635	$210,027		$0
Stabilization for Path	SY	$2.27	34907	$79,238		$0
Embankment	CY	$3.96	36361	$143,990		$0
Sod	SY	$2.33	28907	$67,354		$0
Perf. Turf	SY	$0.75		$0	47451	$35,588
SUBTOTAL				**$650,863**		**$35,588**
MOBILIZATION (THIS IS SUB+CONTIN. X % =)		**5.0%**		$34,170		$1,868
MOT		**2.0%**		$13,017		$712
CONTINGENCIES		**5.0%**		$32,543		$1,779
CEI		**10.0%**		$73,059		$3,995
			-	$0		$0
GRAND TOTAL				**$803,652**		**$43,943**

POTENTIAL SAVINGS: $759,710

Implementation Plan

The Project Manager and Engineer of Record attended the VE Presentation. A copy of the Value Engineering Report will also be sent to the Project Manager and Engineer of Record to document all of the changes approved by District Three Management. The Project Manager will ensure the Value Engineering changes are made.

Summary of changes:

Implement VE 2, VE 6 and VE 9 as detailed in this report including changes by management in the Resolution Meeting as described above.

Design a full median opening at the new intersection of Bobby Brown Road and SR87 north.