Appendix A: Efficient Transportation Decision Making (ETDM) Summary Report

ETDM Summary Report

Project #12597 - SR 87 Connector

Programming Screen - Published on 10/13/2011

Printed on: 10/10/2012

Introduction to Programming Screen Summary Report

The Programming Screen Summary Report shown below is a read-only version of information contained in the Programming Screen Summary Report generated by the ETDM Coordinator for the selected project after completion of the ETAT Programming Screen review. The purpose of the Programming Screen Summary Report is to summarize the results of the ETAT Programming Screen review of the project; provide details concerning agency comments about potential effects to natural, cultural, and community resources; and provide additional documentation of activities related to the Programming Phase for the project. Available information for a Programming Screen Summary Report includes:

- Screening Summary Report chart
- Project Description information (including a summary description of the project, a summary of public comments on the project, and community-desired features identified during public involvement activities)
- Purpose and Need information (including the Purpose and Need Statement and the results of agency reviews of the project Purpose and Need)
- Alternative-specific information, consisting of descriptions of each alternative and associated road segments; an overview of ETAT Programming Screen reviews for each alternative; and agency comments concerning potential effects and degree of effect, by issue, to natural, cultural, and community resources.
- Project Scope information, consisting of general project commitments resulting from the ETAT Programming Screen review, permits, and technical studies required (if any)
- Class of Action determined for the project
- Dispute Resolution Activity Log (if any)

The legend for the Degree of Effect chart is provided in an appendix to the report.

For complete documentation of the project record, also see the GIS Analysis Results Report published on the same date as the Programming Screen Summary Report.

Table of Contents

Project Overview 1

1 Purpose of and Need for 3

1.1. Purpose & Need Data 3

1.2. Project Description Data 6

1.2.1. Description Statement 6

1.2.2. Summary of Public Comments 7

1.2.3. DCA Review of Local Government Comprehensive Plan Consistency 7

1.2.4. Federal Consistency Determination 9

1.2.5. Additional Consistency Information 9

1.2.6. Community Desired Features 9

2 Alternative-Specific Data 10

2.1. Alternative #1 10

2.1.1. Alternative Description 10

2.1.2. Segment(s) Description 10

2.1.3. Project Effects Overview 11

2.1.4. Agency Comments and Summary Degrees of Effect 12

2.2. Alternative #2 62

2.2.1. Alternative Description 62

2.2.2. Segment(s) Description 62

2.2.3. Project Effects Overview 63

2.2.4. Agency Comments and Summary Degrees of Effect 64

11

3 Project Scope 7

3.1. General Project Commitments 117

3.2. Permits 117

3.3. Technical Studies 117

3.4. Class of Action 117

3.5. Dispute Resolution Activity Logs 117

11

4 Appendicies 8

4.1. Degree of Effect Legend 118

4.2. Project Attachments 118

12597 - SR 87 Connector ** Most Recent Data

Review Start Date:	12/17/2009	**Phase:**	Programming Screen
From:	SR 87S or SR 87S/US 90	**To:**	SR87N/US90 or SR87N/Southridge,"Location not available."
District:	District 3	**County:**	Santa Rosa County
Planning Organization:	FDOT District 3	**Plan ID:**	
Contact Name:	Amanda Marshall	**Contact Email:**	amanda.marshall@dot.state.fl.us

Project Re-Published 10/13/2011

Project Overview: Summary Degree of Effect Chart

Legend

- N/A N/A / No Involvement
- 1 Enhanced
- 0 None
- 2 Minimal (after 12/5/2005)
- 3 Moderate
- 4 Substantial
- 5 Dispute Resolution (Programming)

	Evaluation of Direct Effects																				
	Natural											Cultural			Community						
	Air Quality	Coastal and Marine	Contaminated Sites	Farmlands	Floodplains	Infrastructure	Navigation	Special Designations	Water Quality and Quantity	Wetlands	Wildlife and Habitat	Historic and Archaeological Sites	Recreation Areas	Section 4(f) Potential	Aesthetics	Economic	Land Use	Mobility	Relocation	Social	Secondary and Cumulative Effects
Alternative #1 **From SR87S/US90 To SR 87N/SR 89S** *- Reviewed from 12/17/2009 to 1/31/2010* *- Published on 10/13/2011*	2	2	2	2	4	1	3	3	4	4	4	3	3	3	2	1	2	1	2	3	4
Alternative #2 **From SR87S/US90 To SR 87N/SR 89N** *- Reviewed from 12/17/2009 to 1/31/2010* *- Published on 10/13/2011*	2	2	2	2	4	1	2	3	4	4	4	3	4	3	2	1	2	1	2	3	4
Alternative #3 - Eliminated **From SR87S/US90 To SR 87N north of Whiting Field** *- Reviewed from 12/17/2009 to 1/31/2010* *- Published on 10/13/2011*	2	2	3	3	4	1	2	4	4	4	4	3	5	4	2	1	2	1	2	3	4
Alternative #4 - Eliminated **From SR87S/US90 To SR 87N/US 90** *- Reviewed from 12/17/2009 to 1/31/2010* *- Published on 10/13/2011*	2	2	2	2	4	1	4	3	4	5	4	4	4	4	3	1	3	1	2	3	5
Alternative #5 - Eliminated **From SR87S/US90 To SR 87N/US 90** *- Reviewed from 12/17/2009 to 1/31/2010* *- Published on 10/13/2011*	2	2	2	2	4	1	3	3	4	5	4	4	4	4	3	1	3	1	2	3	5
Alternative #6 - Eliminated **From SR87S/US 90 To SR87N/US 90, &**	2	2	2	2	4	1	3	3	4	5	4	4	4	4	3	1	3	1	2	3	5

US90/Glover Ln.
- Reviewed from 12/17/2009 to 1/31/2010
- Published on 10/13/2011

Purpose and Need

The purpose of the SR 87 Connector Project Development and Environment (PD&E) Study is to develop a proposed improvement strategy that is technically sound, environmentally sensitive and publicly acceptable. This project is needed to provide for a new roadway facility linking SR 87S with SR 87N, as an alternative to the existing shared facility of SR 87 and US 90, which is a constrained facility that is currently operating at a failing level of service (LOS F). Therefore, the primary need for this new corridor is to provide additional capacity, and to improve regional connectivity by providing a more direct route from areas of high growth in northern Santa Rosa County, such as the Berryhill Road area, to I-10 and to areas further to the south. Likewise, access will be improved to and from I-10 for the Whiting Field U.S. Naval Air Station, and the County's Joint Use Planning Area near Whiting Field. It is also anticipated that this new facility would provide relief to Ward Basin Road and its intersection with US 90. It is also intended to provide much needed relief to the US 90 Blackwater Bridge.

Emergency Evacuation
SR 87 serves as a vital evacuation route for northbound traffic destined for I-65 in Alabama. During times of hurricane force winds, both the Escambia Bay Bridge and the Garcon Point Bridge close. This leaves SR 87, north to the interstate and beyond the only access point out for many beach area communities, such as Gulf Breeze and Navarre. It is the only access point into the area for Emergency First Responders. However, with a portion of the current alignment travelling along a congested portion of US 90, through historic downtown Milton, it cannot function as a contiguous roadway. The project will address future projected deficiencies on an established emergency hurricane evacuation route.

Multi-modalism
The project will also address the need for greater bicycle and sidewalk connectivity in the County with possible connections with the Blackwater Heritage Trail enabling area resident's direct access. Unfortunately, Escambia County Area Transit does not provide service to this area of Santa Rosa County. However, in the future if such services were to be provided, the proposed facility would offer greater opportunities in regional network systems for transit.

Roadway Characteristics
Depending on the corridor selected, the project could range between 6 and 12 miles in length. Based upon preliminary project review, the new facility will likely be a two-lane rural facility with an open drainage system; however, in areas where steep grades or poor soil conditions occur near wetlands, separate stormwater retention ponds may be required.

Social Demand and Economic Development
Santa Rosa County has been experiencing considerable growth over the past year, and has grown in its own right, but also as a bedroom community to the greater Pensacola area. This growth has spurred the need for an improved roadway network. In addition, there are several major traffic generators within the US 90 corridor area, such as new residential developments, the Santa Rosa Criminal Justice Center, the Santa Rosa Corrections Facility, Whiting Field U.S. Naval Air Station, Team Rosa Joint Planning area near Whiting Field, and the Santa Rosa Commerce Park, which would all benefit from the capacity this facility will provide. The need for the project is also related to committed trips associated with future development in the northern portions of Santa Rosa County, as well as, the future development along the US 90 corridor, which is hindered by the existing capacity limits of US 90.

Future Growth
Santa Rosa County has grown 173% since 1980 and is expected to grow another 92% by 2030. This increase will put further demand on the US 90/SR 87 segment, making growth and evacuation difficult due to a lack of capacity. In Traffic Analysis Zones adjacent to the corridor, population is anticipated to grow by 2,648 from 2,029 to 4,677, or 56.62 percent, between 1997 and 2020. Employment is projected to increase by 575 from 908 to 1,483, or 38.77 percent. The number of dwelling units is forecasted to rise by 1,114 from 827 to 1,941, or 57.39 percent.

Traffic Data
According to the Santa Rosa County Comprehensive Plan, the current adopted Level of Service (LOS) standard for US 90 is D. In 2008, US 90 from Ward Basin Road to SR 87N the road had a failing level of service. Without the proposed improvement, the operating conditions will continue to deteriorate. The Raw Model Volume for the 2020 Needs Plan for this new segment is 9,472. This would provide much needed relief to US 90.

Safety/Crash Rates
The information below contains crash data from the period of 2004 thru 2009 according to the Florida Department of Transportation TSAT data base.

On SR 87 south, from I-10 to US 90, between mile points 18.500 (I-10) and 19.769 (US 90), there were a total of 86

crashes, 47 of those were with injuries, and 39 with property damage only. The majority of the crashes in this segment occurred at the US 90/SR 87S intersection.

On US 90, from 87 south to 87 north, between mile points 11.610 and 16.202, there were a total of 234 crashes, 144 of those were with injuries, 1 fatality, and 89 with property damage only. The majority of these crashes were distributed throughout the segment. There was, however, a slightly higher concentration of crashes at the US 90/SR 87N intersection. The single fatality in the segment occurred at mile point 13.847 just east of Ward Basin Road.

On SR 87N, from US 90 to Southridge Road, between mile points 11.610 and 16.202, there were a total of 166 crashes, 113 of those were with injuries, and 53 with property damage only. As with the segment along US 90, the majority of these crashes were distributed throughout the segment. There was, however, a slightly higher concentration of crashes at the US 90/SR 87N intersection.

The new proposed road way will connect SR 87S and SR 87N. Presently, the SR 87 corridor follows along US 90, a congested roadway, for five miles. This portion of the corridor is operating at a LOS F. Improvements to the existing roadway in this vicinity are difficult due to the historic downtown Milton area. By developing a new corridor that does not follow the existing US 90 alignment, the traveler would be able to avoid this high traffic area.

Plan Consistency
The proposed new facility is consistent with the Santa Rosa County Comprehensive Plan, and is also referenced in the County's Capital Improvements Schedule in Policy 4.1.E.3. The Comprehensive Plan design year for this facility is currently 2025. As the project moves through the next study phase and a formal forecast traffic report is completed, the design year will change to allow for a standard twenty year forecast year to comply with federal guidelines (Design Year 2035). Likewise, the proposed new facility is in the TIP and the STIP, as well as, in the Florida/Alabama TPO and listed in their five-year work program.

Purpose and Need Reviews

FL Department of Community Affairs Comments

Agency	Acknowledgment	Review Date
FL Department of Community Affairs	Understood	3/2/2010

Comments

No Purpose and Need Comments Were Found.

FL Department of Environmental Protection Comments

Agency	Acknowledgment	Review Date
FL Department of Environmental Protection	Understood	1/29/2010

Comments

No Purpose and Need Comments Were Found.

FL Fish and Wildlife Conservation Commission Comments

Agency	Acknowledgment	Review Date
FL Fish and Wildlife Conservation Commission	Understood	1/19/2010

Comments

No Purpose and Need Comments Were Found.

Federal Highway Administration Comments

Agency	Acknowledgment	Review Date
Federal Highway Administration	Accepted	4/1/2010

Comments

Since the intent seems to be to acquire enough right-of-way for an ultimate 4-lane project, the scope of the PD&E should assess the impacts of a 4-lane facility, with the understanding that it is likely to be a phased improvement.

DCA noted potential inconsistencies with comprehensive land use and environmental policies in their AN/ETDM review. Some of these concerns could potentially be addressed using access management standards for the project as a means of guiding secondary development to the most appropriate locations. This should be addressed during PD&E.

The project description states that the LRTP indicates the year 2025 as the design year for the project. Funding in the associated planning documents should therefore be consistent with this schedule. In other words, a portion of the construction funding would need to be indicated by the year 2025, with money for design and right-of-way programmed for earlier dates in the LRTP, TIP and STIP. FHWA would look for consistency with these documents, as well as the local comprehensive plans, before PD&E approval.

National Marine Fisheries Service Comments

Agency	Acknowledgment	Review Date
National Marine Fisheries Service	Understood	1/15/2010

Comments

No Purpose and Need Comments Were Found.

Natural Resources Conservation Service Comments

Agency	Acknowledgment	Review Date
Natural Resources Conservation Service	Understood	1/8/2010

Comments

No Purpose and Need Comments Were Found.

Northwest Florida Water Management District Comments

Agency	Acknowledgment	Review Date
Northwest Florida Water Management District	Understood	1/29/2010

Comments

No Purpose and Need Comments Were Found.

US Army Corps of Engineers Comments

Agency	Acknowledgment	Review Date
US Army Corps of Engineers	Understood	12/23/2009

Comments

No Purpose and Need Comments Were Found.

US Coast Guard Comments

Agency	Acknowledgment	Review Date
US Coast Guard	Understood	1/12/2010

Comments

No Purpose and Need Comments Were Found.

US Environmental Protection Agency Comments

Agency	Acknowledgment	Review Date
US Environmental Protection Agency	Understood	1/14/2010

Comments

No Purpose and Need Comments Were Found.

US Fish and Wildlife Service Comments

Agency	Acknowledgment	Review Date
US Fish and Wildlife Service	Understood	1/22/2010
Comments		
No Purpose and Need Comments Were Found.		

Project Description Summary

Project Description Summary

This project includes a proposed new roadway in Santa Rosa County. It is currently MPO Priority #9. The Project Development and Environment Study (PD&E) and a portion of the Design phase are the only phases in the 2020 Cost Feasible Plan. It is anticipated that the new roadway will be a two-lane facility with right-of-way for a future four-lane divided facility.

SR 87 Description

The existing SR 87 is primarily a south-north rural minor arterial roadway located in Santa Rosa County, Florida. The road extends from US 98 along the Gulf Coast to the Florida/Alabama State line. (See SR 87 Reference Maps, Map Number 1) The existing roadway combines multiple rural and urban cross-sections, but generally is rural in nature with the exceptions through the Town of Milton. SR 87 serves as a corridor for freight movement. The truck traffic along the SR 87 route ranges from 7.88% on the segment between I-10 and US 90, to 5.51% on US 90/SR 87, and 13.44% on SR 87N. However, it should also be noted that only the segment south of I-10, is part of the SIS.

In the Study Area (See SR 87 Reference Maps, Map Number 2), the segment of SR 87S from I-10 north to US 90 is four -lane divided, and has an Access Classification of 4. At US 90, SR 87S utilizes the US 90 alignment for approximately 4.6 miles and heads west over the Blackwater River, through thehistoric district of Milton to where it intersects with SR 87N. This segment is mostly a two-lane undivided roadway, and has Access Classifications of 4 and 6. From US 90, SR 87N runs north approximately 27.4 miles to the Florida/Alabama State line. The segment between US 90 and the southern SR 89intersection, approximately 3.5 miles, is a five-lane urban section, and hasan Access Classification of 6. The segment between the southern SR 89 splitand Langley Street is a four-lane divided rural section, with an AccessClassification of 4. It should be noted the segment from Langley Street to the Alabama State line is currently under-going a PD&E Study to increase its capacity from a two-lane undivided facility to a four-lane divided facility.

SR 87 serves as one of the State's primary emergency evacuation routes enabling evacuations from the coastline, north into Alabama and a host of other northern destinations. SR 87 also serves local and interregional traffic, from destinations such as the Gulf Coast, the Town of Milton, and the Naval Air Station Whiting Field, to I-10.

Subject Project
Currently, the US 90/SR 87 alignment has a failing level of service (LOS F) negatively impacting travel. In an effort to improve emergency evacuation, and to more effectively meet area commuter's needs, the Florida Department of Transportation is conducting this Project Development and Environment Study to evaluate the potential for providing a new corridor for the missing link of SR 87. The study area, as shown in Figure 2, extends from a southern boundary just north of I-10 along SR 87S; to the intersection of Southridge Road and SR 87N to the north; just west of SR 87N to the west; and just east of SR 87S to the east.

In addition to the No-build alternative and the Transportation System Management (TSM) alternative along the existing alignment, a number of new corridors will be identified and evaluated for improved mobility and safety. See Figure 3. SR 87 Connector Alternative Corridors Location Map.

As shown in the Alternative Corridors Location Map (See SR 87 Reference Maps, Map Number 3), Corridor 1 will extend north from the US 90/SR 87S intersection crossing the river in proximity of the existing eastern power easement crossings. Once across the river it will run parallel, or adjacent to the power easement, then connect with SR 87N in proximity of the southern split of SR 87N and SR 89 utilizing the Manning Lane right-of-way. This corridor would be roughly 6.5 miles in length.

Much like Corridor 1, Corridor 2 will also extend north from the US 90/SR 87S intersection crossing the river in proximity of the eastern most existing power easement crossing. Once across the river it will run slightly north of Corridor 1, and run adjacent to the Clear Water Creek environmental lands, where it then heads west to connect with SR 87N in

proximity of the northern split of SR 87N and SR 89. This corridor would be roughly 7.2 miles in length.

Like Corridors 1 and 2, Corridor 3 will extend north from the US 90/SR 87S intersection crossing the river in proximity of the eastern most existing power easement crossing. Once across the river, the corridor will proceed north on the east side of Whiting Field possibly utilizing portions of the Pat Brown Road right-of-way. Once north of Whiting Field, the corridor will seek passage through a narrow gap between the Nature Conservancy/Florida Forever Lands and Whiting Field to a point where it then can be rejoined with SR 87N north of Whiting Field and south of Southridge Road. This corridor would be around 10.5 miles in length.

Corridor 4 will evaluate areas to the south of US 90, and will involve a new river crossing between Bagdad and Milton. The southern corridor will generally head west from SR 87S using a portion of the US 90 right-of-way than can accommodate widening, and reconnect with SR 87N at the US 90/SR87N intersection. The western end of this corridor near SR 87N will utilize the right-of-way of the Blackwater Heritage Trail, and incorporating the trail into the roadways cross section. This corridor may be approximately 5.6 to 6.5 miles in length depending on which option is selected. (The options for this corridor include Alternative 4, Alternative 5, or Alternative 6.)

Additional Financial Project Numbers associated with this project: 41674832202, 41674842201, and 41674842202.

Summary of Public Comments

February 25, 2010: A Project Kick-off Meeting was held with the Santa Rosa County Commission

March 9, 2010: A Project Kick-off Meeting was held with the Milton City Council

March 10, 2010: A project Presentation was given at the Florida-Alabama Transportation Planing Organization

March 23, 2010: A Public Kick-off Meeting was conducted at the Santa Rosa County Auditorium. To see pubic comments go to Project Documents Section and refer to Public Involvement Comments published on June 8, 2010.

January 27, 2011: The public Corridor Alternatives Meeting was conducted at the Santa Rosa County Auditorium.

August 16, 2011: An Alternatives Public Workshop was conducted at the Santa Rosa County Auditorium.

DCA Review of Local Government Comprehensive Plan Consistency

Date: 03/02/2010
Determination: Not consistent with Local Government Comp Plan.
Comment: Consistency review for proposed State Road 87 Connector project

Reviewed for consistency with the Santa Rosa County Comprehensive Plan and the City of Milton Comprehensive Plan

The State Road 87 Connector ETDM project is a proposed new roadway in Santa Rosa County which consists of six alignment alternatives associated with this review. The project is intended to provide an alternative to the existing shared facility of State Road 87 and US 90 which currently operates at a failing level of service. The indicated need for a new corridor is to provide additional capacity and improve regional connectivity.

Alternatives 1, 2 and 3 identify alternative connections to State Road 87 and US 90, which are located northeast of the City of Milton. Alternatives 2 and 3 traverse areas adjacent to Florida Forever lands. Alternatives 4, 5 and 6 connect State Road 87 to US 90 south of the City of Milton crossing the Blackwater River. The alternatives south of Milton are intended to route traffic around the City of Milton Historic District.

A portion of State Road 87 is identified in the Santa Rosa Comprehensive Plan 2008-2025 Comprehensive Plan Capital Improvements Element as a Federal earmark multi-laning project. However, the Element does not reference project boundaries associated with this specific improvement. The ETDM Project Description does not identify a funding source for this project.

None of the project alternatives are identified on Map 4-3 of the Santa Rosa County 2020 Future Transportation Map and none are identified on Map A of the City of Milton Future Transportation Map.

The State Road 87 Connector project (including its alternatives) is not consistent with the comprehensive plans of Santa Rosa County or the City of Milton for the following reasons:

(1) It is not specifically identified in the Santa Rosa County or the City of Milton Comprehensive Plans.
(2) It is not identified on the Future Transportation Maps of Santa Rosa County or the City of Milton.
(3) It is not specifically identified in the Five-Year Capital Improvement Schedule of Santa Rosa County and the City of Milton.
(4) It is inconsistent with Policy 8.1.D.6 of the Conservation Element of the Santa Rosa County Comprehensive Plan, which states that new public infrastructure should not be planned where development may be promoted in environmentally sensitive lands.
(5) It is inconsistent with Objective 3.3A of the Future Land Use Element of the Santa Rosa County Comprehensive Plan, which requires that future development within adopted Military Airport Zones (MAZs) not negatively impact current and long term viable use of airfields by limiting incompatible land uses.

The project should be modified to be consistent with the policies identified above and the local government comprehensive plans should be revised to include this project before it advances into the FDOT Five Year Work program.

Staff review of the project addressed the following concerns:

Land use --
Alternatives 1, 2, and 3 of the State Road 87 Connector project are located to the northeast of the City of Milton and connect through land designated as "Agriculture (AG)" on Map 3-1 of the Santa Rosa County Future Land Use Map. Construction of a roadway along these corridors has the potential to promote urban sprawl, based on the definitions in Rules 9J-5.003(134) and 9J-5.006(5), F.A.C.
(134) "Urban sprawl" means urban development or uses which are located in predominantly rural areas, or rural areas interspersed with generally low-intensity or low-density urban uses, and which are characterized by one or more of the following conditions: (a) The premature or poorly planned conversion of rural land to other uses; (b) The creation of areas of urban development or uses which are not functionally related to land uses which predominate the adjacent area; or (c) The creation of areas of urban development or uses which fail to maximize the use of existing public facilities or the use of areas within which public services are currently provided. Urban sprawl is typically manifested in one or more of the following land use or development patterns: Leapfrog or scattered development; ribbon or strip commercial or other development; or large expanses of predominantly low-intensity, low-density, or single-use development.

The information provided in the ETDM Project Description is insufficient to determine the impacts of the project on urban sprawl or greenhouse gas emmissions. The project has been discussed with Santa Rosa County planning staff who indicated that the selected alignment alternative is intended to be constructed as a limited access roadway. If so, contribution to urban sprawl and greenhouse gas emissions may be mitigated, depending on usage and access characteristics.

Objective 3.1.A of the Santa Rosa County Comprehensive Plan Future Land Use Element requires future land uses to be coordinated in order to ensure the protection of natural resources and with the availability of adequate infrastructure, the reduction of greenhouse gas emmissions. Alternatives 1,2, and 3 connect through agricultural, single family residential, industrial and conservation/recreation land uses. While Alternatives 4, 5 and 6 maximize the use of existing roadway infrastructure as identified in the ETDM Project Description, Alternatives 1,2 and 3 as described may not protect natural resources and reduce greenhouse gas emissions.

The portions of alternatives traversing through the City of Milton connect through commercial uses as identified on the City Future Land Use Map. The City of Milton Comprehensive Plan does not contain policies within its plan that address the reduction of greenhouse gas emmissions.

Transportation --
The ETDM Purpose and Need Statement identifies State Road 87 as a vital evacuation route for Gulf Breeze and Navarre residents to travel northbound. State Road 87 is also identified as a hurricane evacuation route on Map 4-2 Santa Rosa Future Transportation Map 2025. However, the current route connects using a congested portion of US 90

through the City of Milton downtown section.

The project is identified in the MPO 2020 Cost Feasible Plan as a Project Development and Environment Study (PD& E) consisting of preliminary design phases. The roadway corridor selected will be a two-lane facility with right-of way acquired for a four lane facility. No funding sources have currently been identified for the project. Further, the anticipated residential and business growth of Santa Rosa County emphasizes the need for an improved roadway network which will better facilitate traffic along the existing corridor.

Conservation -
Policy 8.1.D.6 of the Santa Rosa County Comprehensive Plan Conservation Element requires that new public infrastructure be compatible with future and existing land uses and should not promote increased development located in environmentally sensitive lands. The proposed roadway alternatives located to the north and east of the City of Milton (Alternatives 1, 2 and 3) are located in agriculturally designated areas on the Santa Rosa County Future Land Use Map. Portions of the roadway alternatives are also located close to the Clear Creek/Whiting Field Florida Forever Project Boundary. Construction of a new roadway through and around areas designated for conservation has the potential to jeopardize environmental resources located in and around the Florida Forever project Boundary and surrounding agricultural areas. The project is therefore inconsistent with Santa Rosa Comprehensive Plan Policy 8.1.D.6.

Military Facility-
Objective 3.3.A of the Santa Rosa County Comprehensive Plan Future Land Use Element requires that future development within adopted Military Airport Zones (MAZs) and Public Airport Zones (PAZs) not negatively impact current and long term viable use of the airfield by limiting incompatible land uses. Portions of the proposed location of roadway Alternatives 1, 2 and 3 are located within, or near the Airport Zones identified on Map 3-18 of the Future Land Use Map Series (NAS Whiting Field Military Airport Zone (MAZ) Map) contained within the Santa Rosa County Comprehensive Plan. The map identifies Accident Potential Zones within the MAZ boundaries. Accident Potential Zones refer to areas with a greater potential for accidents to occur around airport facilities.

Alternatives 2 and 3 of this project are inconsistent with Objective 3.3.A of the Santa Rosa County Comprehensive Plan and Map 3-18 of the Santa Rosa County Future Land Use Map Series (NAS Whiting Field Military Facility) because of safety concerns involving the potentially adverse impacts of new roadway construction and vehicle traffic passing through Airport Zone boundaries around the existing military facility. Alternative 1 is located near the Airport Zone, but is located outside of the Airport Zone boundary.

Federal Consistency Determination

Date: 02/05/2010
Determination:CONSISTENT, WITH COMMENTS with Coastal Zone Management Program.
Comment: Based on the information contained in the AN and associated state agency comments, the state has no formal objections to allocation of federal funds for the subject project and, therefore, the funding award is consistent with the Florida Coastal Management Program (FCMP). The applicant must, however, address the concerns identified by our reviewing agencies prior to project implementation. The state's continued concurrence with the project will be based, in part, on the adequate resolution of issues identified during this and subsequent reviews. The state's final concurrence of the project's consistency with the FCMP will be determined during the environmental permitting process.

Additonal Consistency Information

- Consistency with Air Quality Conformity is unknown.
- Consistent with MPO Goals and Objectives.

Community Desired Features

No desired features have been entered into the database. This does not necessarily imply that none have been identified.

Alternative #1

Alternative Description	
From	SR87S/US90
To	SR 87N/SR 89S
Type	New Alignment
Status	ETAT Review Complete
Total Length	6.5 mi.
Cost	
Modes	Roadway Bicycle Pedestrian

Location and Length			
	Segment S-002	Segment S-003	Segment S-001
Name			
Beginning Location			
Ending Location			
Length (mi.)	1.69	2.45	2.35
Roadway Id			
BMP	??	??	??
EMP	??	??	??
Jurisdiction and Class			
	Segment S-002	Segment S-003	Segment S-001
Jurisdiction			
Urban Service Area			
Functional Class			
Current and Future Conditions			
Base Conditions			
	Segment S-002	Segment S-003	Segment S-001
Year			
AADT	unspecified	unspecified	unspecified
Lanes			
Config			
Interim Plan			
	Segment S-002	Segment S-003	Segment S-001
Year			
AADT	unspecified	unspecified	unspecified
Lanes			
Config			
Needs Plan			
	Segment S-002	Segment S-003	Segment S-001
Year			
AADT	unspecified	unspecified	unspecified
Lanes			
Config			
Cost Feasible Plan			
	Segment S-002	Segment S-003	Segment S-001
Year			
AADT	unspecified	unspecified	unspecified

Lanes			
Config			

No funding sources found.

Project Effects Overview

Issue	Degree of Effect	Organization	Date Reviewed
Natural			
Air Quality	2 Minimal	US Environmental Protection Agency	1/26/2010
Coastal and Marine	2 Minimal	National Marine Fisheries Service	1/15/2010
Contaminated Sites	2 Minimal	US Environmental Protection Agency	1/28/2010
Contaminated Sites	2 Minimal	FL Department of Environmental Protection	1/29/2010
Farmlands	2 Minimal	Natural Resources Conservation Service	1/08/2010
Floodplains	3 Moderate	US Environmental Protection Agency	1/28/2010
Floodplains	4 Substantial	Northwest Florida Water Management District	1/29/2010
Navigation	3 Moderate	US Coast Guard	12/18/2009
Navigation	2 Minimal	US Army Corps of Engineers	12/24/2009
Special Designations	3 Moderate	US Environmental Protection Agency	1/29/2010
Water Quality and Quantity	4 Substantial	Northwest Florida Water Management District	1/29/2010
Water Quality and Quantity	3 Moderate	FL Department of Environmental Protection	1/29/2010
Water Quality and Quantity	4 Substantial	US Environmental Protection Agency	1/31/2010
Wetlands	2 Minimal	National Marine Fisheries Service	1/15/2010
Wetlands	3 Moderate	US Army Corps of Engineers	12/24/2009
Wetlands	4 Substantial	Northwest Florida Water Management District	1/29/2010
Wetlands	3 Moderate	US Environmental Protection Agency	1/29/2010
Wetlands	4 Substantial	US Fish and Wildlife Service	1/22/2010
Wetlands	4 Substantial	FL Department of Environmental Protection	1/29/2010
Wildlife and Habitat	4 Substantial	FL Fish and Wildlife Conservation Commission	1/19/2010
Wildlife and Habitat	4 Substantial	US Fish and Wildlife Service	1/22/2010
Wildlife and Habitat	2 Minimal	Naval Air Station Whiting Field	2/14/2010
Cultural			
Historic and Archaeological Sites	3 Moderate	Federal Highway Administration	4/08/2010
Historic and Archaeological Sites	2 Minimal	Miccosukee Tribe of Indians of Florida	1/19/2010

Historic and Archaeological Sites	3 Moderate	FL Department of State	1/25/2010
Recreation Areas	3 Moderate	US Environmental Protection Agency	1/28/2010
Recreation Areas	3 Moderate	FL Department of Environmental Protection	1/29/2010
Section 4(f) Potential	3 Moderate	Federal Highway Administration	4/08/2010
Section 4(f) Potential	N/A N/A / No Involvement	National Park Service	1/15/2010
Community			
Land Use	3 Moderate	FL Department of Community Affairs	3/02/2010
Land Use	2 Minimal	Naval Air Station Whiting Field	2/14/2010
Mobility	1 Enhanced	FL Department of Environmental Protection	1/29/2010
Social	3 Moderate	US Environmental Protection Agency	2/01/2010
Social	0 None	FL Department of Community Affairs	3/02/2010
Secondary and Cumulative			
Secondary and Cumulative Effects	4 Substantial	Northwest Florida Water Management District	1/29/2010
Secondary and Cumulative Effects	4 Substantial	US Fish and Wildlife Service	1/22/2010

ETAT Reviews: Natural

Air Quality

Coordinator Summary

2 Summary Degree of Effect

Air Quality Summary Degree of Effect: Minimal

Reviewed By:
FDOT District 3 (5/12/2010)
Comments:
The Florida Department of Transportation (FDOT) has evaluated comments from the US Environmental Protection Agency (USEPA) and recommends a Degree of Effect of Minimal.

The project is located in an area which is designated 'attainment' for all of the National Ambient Air Quality Standards under the criteria provided in the Clean Air Act.

An air quality analysis will be performed as part of the Project Development and Environment (PD&E) Study as outlined in the scope for this project.

The Federal Highway Administration (FHWA) did not provide comment.

ETAT Reviews for Air Quality

2 ETAT Review by Madolyn Dominy, US Environmental Protection Agency (01/26/2010)

Air Quality Effect: Minimal

Coordination Document: No Selection

Identified Resources and Level of Importance:
Resources: Air Quality

Level of Importance: Low, due to minimal degree of effect. A minimal degree of effect is being assigned to the air quality issue for the proposed roadway project (ETDM #12597, SR 87 Connector, Alternatives 1 - 6).

Comments on Effects to Resources:
Santa Rosa County (which includes the SR Connector Corridor) has not been designated non-attainment or maintenance for ozone, carbon monoxide (CO) or particulate matter (PM) in accordance with the Clean Air Act. There are no violations of National Ambient Air Quality Standards (NAAQS). Nevertheless, it is recommended that the environmental review phase of this project include air impact analyses which documents the current pollutant concentrations recorded at the nearest air quality monitors, an evaluation of anticipated emissions, and air quality trend analyses. It is also recommended that environmental reviews of the project include hot spot analyses at the points in time and places where congestion are expected to be greatest or in areas of sensitive receptors. Air quality modeling using an approved software program should be conducted to determine whether any conformity issues or violations of air quality standards are anticipated within the project area and/or counties. Current and proposed air quality requirements and standards should be used in modeling software programs.

Additional Comments (optional):
As population growth and vehicle volumes increase, there is the potential to have air quality conformity and non-attainment issues in the future. FDOT, MPOs, municipalities, and regional planning agencies should conduct air quality modeling as traffic forecasts increase.

Coordinator Feedback: None

- No review submitted from the Federal Highway Administration

Coastal and Marine

Coordinator Summary

2 Summary Degree of Effect

Coastal and Marine Summary Degree of Effect: Minimal

Reviewed By:
FDOT District 3 (4/21/2010)
Comments:
The Florida Department of Transportation (FDOT) has evaluated comments from the National Marine Fisheries Service (NMFS) and recommends a Degree of Effect of Minimal.

There are several important resources in the area; Pensacola Bay, East Bay, Blackwater Bay and the lower reaches of the Blackwater River, that contain habitats used by federally-managed fish species and their prey.

On January 12, 2010, NMFS staff conducted a site inspection of these areas. From this inspection, it was found that Alternative 1 does not appear to directly impact NMFS trust resources. However, due to possible

indirect impacts, the FDOT acknowledges the NMFS recommendation that stormwater treatment systems be designed to prevent degraded water from reaching estuarine habitats. In addition, drainage and hydrologic functions will be considered during the design of the project and Best Management Practices (BMPs) will be utilized during construction to prevent siltation of downstream estuarine habitats.

The Federal Highway Administration (FHWA) did not provide comments.

ETAT Reviews for Coastal and Marine

2 ETAT Review by David A. Rydene, National Marine Fisheries Service (01/15/2010)

Coastal and Marine Effect: Minimal

Coordination Document: No Selection

Identified Resources and Level of Importance:
Pensacola Bay, East Bay, Blackwater Bay and the lower reaches of the Blackwater River. These systems contain estuarine and marine habitats used by federally-managed fish species and their prey.

Comments on Effects to Resources:
Alternative 1 - NMFS staff conducted a site inspection of the project area on January 12, 2010, to assess potential concerns to living marine resources within Pensacola Bay, East Bay, Blackwater Bay, and the lower reaches of the Blackwater River. The lands adjacent to the proposed alignment appear to be mostly forested palustrine wetlands. It does not appear that Alternative 1 will directly impact NMFS trust resources. However, the road would cross both the Blackwater River (just northeast of Cooper Basin) and Clear Creek, both of which drain to Blackwater Bay, East Bay, and Pensacola Bay. Therefore, the project may result in indirect impacts to downstream NMFS trust resources. Use of the road could result in an increase in the amount of sediment, oil and grease, metals, and other pollutants reaching estuarine habitats utilized by marine fishery resources. Therefore, NMFS recommends that stormwater treatment systems be designed to prevent degraded water from reaching estuarine and marine habitats. Best management practices should be employed during road construction to prevent siltation of downstream estuarine habitats. Additionally, the manner in which the road may affect drainage within the watershed and hydrologic functions should be considered.

Coordinator Feedback: None

- No review submitted from the Federal Highway Administration

Contaminated Sites

Coordinator Summary

2 Summary Degree of Effect

Contaminated Sites Summary Degree of Effect: Minimal

Reviewed By:
FDOT District 3 (4/21/2010)

Comments:
The Florida Department of Transportation (FDOT) has reviewed the comments from the Florida Department of Environmental Protection (FDEP) and the US Environmental Protection Agency (USEPA) and recommends a Degree of Effect of Minimal.

Both agencies found that GIS data indicated there is one Brownfield area, the Santa Rosa Brownfield Redevelopment Area, and a solid waste facility, G&D Tires, Inc., within the 500-ft. project buffer zone. Due to the fact that there are few contaminated sites identified within Alternative 1, impacts are expected to be minimal. However, the FDOT acknowledges the FDEP comment that projects involving 'dewatering' should be discouraged and that dewatering projects would require permits / approval from the Northwest Florida Water Management District.

In addition, FDOT understands the importance of referencing "Section 120 Excavation and Embankment -- Subarticle 120-1.2 Unidentified Areas of Contamination of the Standard Specifications for Road and Bridge Construction" in the project's construction contract documents that would require specific actions by the contractor in the event of any hazardous material or suspected contamination issue arises. FDOT understands that potentially hazardous materials must be properly managed in accordance with Chapter 62 -730, F.A.C. In addition, any solid wastes or other non-hazardous debris must be managed in accordance with Chapter 62-701, F.A.C. Petroleum cleanups must be managed in accordance with Chapter 62-770, F.A.C.

As suggested by the FDEP, a Contamination Screening Evaluation will be performed. Also, we have noted the FDEP comment on the new rule, 62-780, F.A.C., which became effective on April 17, 2005, as well as, Chapters 62-770, 62-777, 62-782 and 62-785, F.A.C., that were amended on April 17, 2005, to incorporate recent statutory changes. We understand that depending on the findings of the environmental assessments, there may be "off-property" notification responsibilities potentially associated with this project.

Finally, the FDOT understands the USEPA comment that remediation may be required if contaminated site features are impacted and area sampling determines pollutants are present above regulatory levels.

No Comments were received from the Federal Highway Administration (FHWA)

ETAT Reviews for Contaminated Sites

2 ETAT Review by Madolyn Dominy, US Environmental Protection Agency (01/28/2010)
Contaminated Sites Effect: Minimal

Coordination Document: No Selection

Identified Resources and Level of Importance:
Resources: Soils, groundwater, surface water which have the potential to be negatively affected by contaminated site features such as underground petroleum storage tanks, industrial/commercial facilities with onsite storage of hazardous materials, solid waste facilities, hazardous waste facilities, National Priority List (NPL) sites, etc.

Level of Importance: These resources are of a high level of importance in the State of Florida. However, a minimal degree of effect is being assigned for the proposed project Alternative 1 (ETDM #12597, SR 87 Connector).

Comments on Effects to Resources:
EPA reviewed the following contaminated sites GIS analysis data for buffer distances of 100, 200, and 500 feet: Brownfield Location Boundaries, Geocoded Dry Cleaners, Geocoded Gasoline Stations, Geocoded Petroleum Tanks, Hazardous Waste Sites, National Priority List Sites, Nuclear

Site Locations, Solid Waste Facilities, Superfund Hazardous Waste Sites, TANKS-NOV 2007, Toxic Release Inventory Sites, and USEPA RCRA Facilities.

Overall, for Alternative 1, there are very few contaminated sites features within proximity of the proposed alignment. The following features are listed in the GIS analysis data at the programming screen phase of the project:

Brownfield Location Boundaries:
The Santa Rosa Brownfield Redevelopment Area is listed as being within proximity of the proposed roadway project. Brownfield projects are defined as abandoned, idled or under-utilized property where expansion or redevelopment is complicated by the presence or potential presence of environmental contamination. Previous thriving areas of economic activity are listed as Brownfield if the area is abandoned by contamination from past uses. Areas being unused or under-utilized are impediments to economic development in rural and urban communities. Redeveloped, these Brownfield areas can be catalysts for community revitalization. The Brownfield program brings together federal agencies to address cleanup and redevelopment in a more coordinated approach. Often times, federal grant programs and public/private organizations assist in the cleanup and redevelopment of Brownfield areas. The environmental review phase of the project should evaluate whether the classification of this area as a Brownfield Site will impact the roadway project.

Solid Waste Facilities:
G&D Tires, Inc (500-foot buffer distance)

No other contaminated sites features listed above were identified in the online EST GIS analysis data search.

Due to the fact that there are minimal to no contaminated sites features identified to be within the buffer boundaries, impacts to and/or from contaminated site features are expected to be minimal.

The environmental review (PD&E) phase of the project should include a survey of the area to confirm the location of current listed contaminated site features, along with other contaminated site features which may have been previously located in the area. If any contaminated sites features (e.g., petroleum storage tanks) are to be impacted or removed during the construction phase of the project, sampling and analysis should be conducted to determine if pollutants are present above regulatory levels. If high levels of pollutants are identified, remediation may be required prior to commencement of construction of the project.

Coordinator Feedback: None

2 ETAT Review by Lauren P. Milligan, FL Department of Environmental Protection (01/29/2010)
Contaminated Sites Effect: Minimal

Coordination Document: No Selection

Identified Resources and Level of Importance:
GIS data indicates that there is one brownfield area, the Santa Rosa Brownfield Redevelopment Area, and a solid waste facility, G&D Tires, Inc., within the 500-ft. project buffer zone.

Comments on Effects to Resources:
Contamination Screening Evaluations should outline specific procedures that would be followed by the applicant in the event that drums, wastes, tanks or potentially contaminated soils are

encountered during construction.

In the event contamination is detected during construction, the Department and Santa Rosa County should be notified, and the FDOT may need to address the problem through additional assessment and remediation activities. Reference should be made to the most recent FDOT specification entitled "Section 120 Excavation and Embankment -- Subarticle 120-1.2 Unidentified Areas of Contamination of the Standard Specifications for Road and Bridge Construction" in the project's construction contract documents that would require specific actions by the contractor in the event of any hazardous material or suspected contamination issue arises.

Depending on the findings of the Contamination Screening Evaluations and the proximity to known contaminated sites, projects involving "dewatering" should be discouraged or limited, since there is a potential to spread contamination to previously uncontaminated areas or less contaminated areas and affect contamination receptors, site workers and the public. Dewatering projects would require permits / approval from the Northwest Florida Water Management District.

Any land clearing or construction debris must be characterized for proper disposal. Potentially hazardous materials must be properly managed in accordance with Chapter 62-730, F.A.C. In addition, any solid wastes or other non-hazardous debris must be managed in accordance with Chapter 62-701, F.A.C. Petroleum cleanups must be managed in accordance with Chapter 62-770, F.A.C.

Please be advised that a new rule, 62-780, F.A.C., became effective on April 17, 2005. In addition, Chapters 62-770, 62-777, 62-782 and 62-785, F.A.C., were amended on April 17, 2005, to incorporate recent statutory changes. Depending on the findings of the environmental assessments, there are "off-property" notification responsibilities potentially associated with this project. These rules may be found at the following website: http://www.dep.state.fl.us/waste/

Based on our experience, the accurate identification, characterization and cleanup of sites requires experienced consulting personnel and laboratory support, management commitment of the project developers and their representatives, and will likely be very time-consuming. Early planning to address these issues is essential to meet construction and cleanup (if required) timeframes. Innovative technologies, such as special storm water management systems, engineering controls and institutional controls, such as conditions on water production wells and dewatering restrictions, may be required, depending on the results of environmental assessments.

Coordinator Feedback: None

- No review submitted from the Federal Highway Administration

Farmlands

Coordinator Summary

2 Summary Degree of Effect

Farmlands Summary Degree of Effect: Minimal

Reviewed By:
FDOT District 3 (3/30/2010)
Comments:
The Florida Department of Transportation (FDOT) has reviewed the comments from the Natural Resources

Conservation Service (NRCS) and recommends a Degree of Effect of Minimal.

The NRCS found that Alternative 1 impacts less than 1 acre of Prime Farmland at the 200 ft buffer width and nearly 8 acres at the 500 ft buffer width. Because the impact to Ag and Prime Farmland was determined to be minimal, the NRCS assigned a minimal impact rating for this Alternative.

No Comments were received from the Federal Highway Administration (FHWA)

ETAT Reviews for Farmlands

2 ETAT Review by Rick Allen Robbins, Natural Resources Conservation Service (01/08/2010)

Farmlands Effect: Minimal

Coordination Document: No Selection

Identified Resources and Level of Importance:
The USDA-NRCS considers soil map units with important soil properties for agricultural uses to be Prime Farmland. In addition, the USDA-NRCS considers any soils used in the production of commodity crops (such as, cotton, citrus, row crops, specialty crops, nuts, etc.) to possibly be considered as Unique Farmlands. Nationally, there has been a reduction in the overall amount of Prime and Unique Farmlands through conversion to non-farm uses. This trend has the possibility of impacting the nation's food supply and exporting capabilities.

Comments on Effects to Resources:
Conducting GIS analysis of Prime Farmland (using USDA-NRCS data) and Important (Unique) Farmland Analysis (using 2004 NWFWMD data) has resulted in the determination that there are Prime Farmland soils at all buffer widths within the Project Area. Alternative #1 impacts less than 1 acre of Prime Farmland up to the 200 foot buffer width, and nearly 8 acres at the 500 foot buffer width. Impacts to Ag lands are primarily restricted to improved and unimproved pasture. Since the impact to Ag and Prime Farmland is minimial, we are assigning a minimal impact rating for this Alternative. Negative effects to important agricultural lands (pecan groves) occur only at the 5280 foot buffer.

Coordinator Feedback: None

- No review submitted from the Federal Highway Administration

Floodplains

Coordinator Summary

4 Summary Degree of Effect

Floodplains Summary Degree of Effect: Substantial

Reviewed By:
FDOT District 3 (4/21/2010)
Comments:
The Florida Department of Transportation (FDOT) has reviewed the comments from the Northwest Florida

Water Management District (NWFWMD) and the US Environmental Protection Agency (USEPA) and recommends a Degree of Effect of Substantial.

The NWFWMD's review found that approximately 176 acres of special flood hazard area are within the 500 foot buffer for this alignment. The flood prone areas are associated with Blackwater River and Clear Creek. In addition, approximately 109 acres are designated as storm surge zones under a Category 5 storm and Elevation ranges from approximately 0 to 174 feet NAVD 88.

The USEPA review of GIS analysis data (DFIRM 100-Year Floodplain and Special Flood Hazard Areas) indicates that all of the Alternatives (1 through 6) have approximately 20% of their acreage within the 100-year floodplain, as designated primarily by Zone AE of the flood hazard zone designation.

The FDOT acknowledges the comments from both agencies concerning the placement of a new roadway and how it will impact flow and possibly alter flood storage capacity. During the conceptual drainage analysis in the PD&E process, engineering design features and hydrological drainage structures will be proposed that will address stormwater transport, flow, and ensure discharge meets or exceeds flood control requirements. This analysis will ensure that the project will comply with the appropriate minimum FEMA floodplain management requirements for any changes in the floodplain elevations. This will include coordination on any appropriate studies and map revisions required by Title 44, Code of Federal Regulations. FDOT understands the need for consultation, and coordination with appropriate flood management agencies will occur relating to regulatory requirements, avoidance, minimization and/or mitigation strategies.

No Comments were received from the Federal Highway Administration (FHWA)or the FL Department of Environmental Protection (FDEP).

ETAT Reviews for Floodplains

3 ETAT Review by Madolyn Dominy, US Environmental Protection Agency (01/28/2010)
Floodplains Effect: Moderate

Coordination Document: No Selection

Identified Resources and Level of Importance:
Resources: Floodplains

Level of Importance: Development within the 100-year floodplain is of a high level of importance. Construction of roadways within the floodplain should not impede, obstruct or divert the flow of water or debris in the floodplain which would alter the roadway's discharge capacity or otherwise adversely affect public health, safety and welfare, or cause damage to public or private property in the event of a flood. A moderate degree of effect is being assigned for the proposed project (ETDM #12597, SR 87 Connector).

Comments on Effects to Resources:
A review of GIS analysis data (DFIRM 100-Year Floodplain and Special Flood Hazard Areas) in the EST at the programming screen phase of the project indicates that all of the Alternatives (1 through 6) have approximately 20% of the acreage within the 100-year floodplain, as designated primarily by Zone AE of the flood hazard zone designation.

General comments relating to floodplains include the fact that any development within the 100-year floodplain has the potential for placing citizens and property at risk of flooding and producing changes in floodplain elevations and plan view extent. Development (such as roadways, housing developments, strip malls and other commercial facilities) within floodplains increases the potential

for flooding by limiting flood storage capacity and exposing people and property to flood hazards. Development also reduces vegetated buffers that protect water quality and destroys important habitats for fish and wildlife. The area surrounding the proposed roadway project is expected to experience growth, and the SR 87 Connector would likely result in development which would have indirect and cumulative effects on floodplains in the SR 87 Connector corridor.

The PD&E phase of the project should include an evaluation of floodplain impacts. FDOT should consider alternatives to avoid adverse effects and incompatible development in the floodplains. Efforts should be made to avoid or minimize impacts to floodplain resources and functions. Engineering design features and hydrological drainage structures should be such that stormwater transport, flow, and discharge meet or exceed flood control requirements. Consultation and coordination with appropriate flood management agencies should occur relating to regulatory requirements, avoidance, minimization and/or mitigation strategies.

Coordinator Feedback: None

4 ETAT Review by Leigh Brooks, Northwest Florida Water Management District (01/29/2010)
Floodplains Effect: Substantial

Coordination Document: To Be Determined: Further Coordination Required

Identified Resources and Level of Importance:
Approximately 176 acres of special flood hazard area are identified within the 500 foot buffer for this alignment. Flood prone areas are associated with Blackwater River and Clear Creek. Approximately 109 acres are designated as storm surge zones under a Category 5 storm. Elevation ranges from approximately 0 to 174 feet NAVD 88.

Comments on Effects to Resources:
Floodplain function could be diminished with a new road, as water storage and flood attenuation potential will be impacted. Placement of roadway fill has the potential to impound waters and otherwise redirect flow, affecting floodplain, wetland, and riverine resources. Likewise, the use of culverts has the potential for altering stream channels and flow. Efforts should be made within the project area to protect floodplain resources and capacity and to prevent offsite flooding.

Proposed activities have the potential to diminish water quality, environmental resiliency, wetland and transitional habitat, and associated economic and environmental benefits provided by a fully functioning, intact floodplain.

Additional Comments (optional):
Efforts should be made to protect floodplain resources and functions. Assurances should be provided that the project has complied with the appropriate minimum FEMA floodplain management requirements for any changes in the floodplain elevations. This includes appropriate studies and map revisions required by Title 44, Code of Federal Regulations.

Hydrologic connectivity and integrity should be maintained. Where impact avoidance is impossible and wetlands and streams must be crossed, extended elevated bridges should be employed to protect the integrity of stream corridors, hydrology, and floodplain functions.

Coordinator Feedback: None

- No review submitted from the FL Department of Environmental Protection
- No review submitted from the Federal Highway Administration

Infrastructure

Coordinator Summary

1 Summary Degree of Effect

Infrastructure Summary Degree of Effect: Enhanced

Reviewed By:
FDOT District 3 (4/21/2010)
Comments:
The Florida Department of Transportation (FDOT) recommends a Degree of Effect of Enhanced for Infrastructure.

This Alternative provides for a much needed facility to more effectively distribute traffic throughout the area. One of the enhancements to the area infrastructure includes providing a new bridge crossing across the Blackwater River. It also provides a more direct connection between I-10 and the Naval Air Station, Whiting Field. Alternative 1 also positively contributes to bicycle and pedestrian modes of travel by linking areas currently isolated.

No comments were received from the Federal Highway Administration (FHWA).

ETAT Reviews for Infrastructure

No reviews found for the Infrastructure Issue.
- No review submitted from the Federal Highway Administration

Navigation

Coordinator Summary

3 Summary Degree of Effect

Navigation Summary Degree of Effect: Moderate

Reviewed By:
FDOT District 3 (4/21/2010)
Comments:
The Florida Department of Transportation (FDOT) has reviewed the comments from the US Army Corps of Engineers (USACOE) and the US Coast Guard (USCG) and recommends a Degree of Effect of Moderate.

The FDOT acknowledges the USACOE comment that the Blackwater River appears to be navigable and the bridge design should take into account the type of boat traffic traditionally on this waterway.

In addition, FDOT also notes the USCG comment that crossing this waterway at the Alternative 1 location will put the crossing in a possibly tidally influenced area as well as a recreational and other navigational use area. In addition, the crossing will need to be evaluated by the USCG to determine possible bridge permitting requirements.

No Comments were received from the Federal Highway Administration (FHWA).

ETAT Reviews for Navigation

3 ETAT Review by Philip R Johnson, US Coast Guard (12/18/2009)

Navigation Effect: Moderate

Coordination Document: To Be Determined: Further Coordination Required

Identified Resources and Level of Importance:
This proposed corridor crosses the Blackwater River north east of Milton, Florida. The Blackwater River may be tidally influenced at the proposed crossing and considered to be a navigable waterway of the United States and subject to Coast Guard jurisdiction for purposes of bridge permitting actions.

Comments on Effects to Resources:
While the Blackwater River may not support commercial navigation at the proposed crossing site, the waterway at that location will need to be evaluated in terms of recreational or other navigational use for possible bridge permitting requirements.

Additional Comments (optional):
Any other crossing of waterways associated with this corridor will also need to be independently evaluated for determining Coast Guard bridge permitting requirements.

CLC Commitments and Recommendations:

Coordinator Feedback: None

2 ETAT Review by Randy Turner, US Army Corps of Engineers (12/24/2009)

Navigation Effect: Minimal

Coordination Document: No Selection

Identified Resources and Level of Importance:
Blackwater River appears to be navigable water for recreational users. The river is one of the four river river systems that drains the Pensacola Bay watershed and drains into the Blackwater Bay estuary. Impacts to navigation should be minimal.

Comments on Effects to Resources:
The bridge design should take into account the type of boat traffic that traditionally uses the waterway. A taller and longer span design would also reduce impacts to the abutting wetland system.

Coordinator Feedback: None

- No review submitted from the Federal Highway Administration

Special Designations

Coordinator Summary

3 Summary Degree of Effect

Special Designations Summary Degree of Effect: Moderate

Reviewed By:
FDOT District 3 (4/21/2010)
Comments:
The Florida Department of Transportation (FDOT) has reviewed the comments from the US Environmental Protection Agency (USEPA) and recommends a Degree of Effect of Moderate.

USEPA's review of GIS data included finding the following Special Designation Sites within the proximity of Alternative 1: Brownfield Location Boundaries, Special Flood Hazard Areas, Public Lands, Prime Farm Land, and Outstanding Florida Waters.

The USEPA assigned a Moderate degree of effect because of the inclusion of an Outstanding Florida Water in this list. The Blackwater River is listed as an Outstanding Florida Water (OFW) and as such, is provided the highest level of protection under the Florida Administrative Code (F.A.C.). Degradation of water quality in an OFW is prohibited except under certain circumstances. Pollutant discharges must not lower existing ambient water quality. Any activity within an OFW requiring a Florida Department of Environmental Protection (FDEP) Environmental Resource Permit (ERP) must be deemed to be clearly in the public interest. FDOT will coordinate and consult with FDEP about the specific permitting requirements relating to this OFW.

No Comments were received from the Federal Highway Administration (FHWA) or the FL Department of Agriculture and Consumer Services.

ETAT Reviews for Special Designations

3 ETAT Review by Madolyn Dominy, US Environmental Protection Agency (01/29/2010)

Special Designations Effect: Moderate

Coordination Document: No Selection

Identified Resources and Level of Importance:
Resources: Brownfield Location Boundaries, Special Flood Hazard Areas, Public Lands (such as conservation easements, preserves, and conservation areas), Outstanding Florida Waters, Prime Farm Lands.

Level of Importance: These special designation features are of a high level of importance in the State of Florida. A moderate degree of effect is being assigned to this issue due to the fact that are special designation features, including an Outstanding Florida Water, within proximity of the proposed project.

Comments on Effects to Resources:
A review of GIS analysis data at the programming screen phase of the project indicates that the following features identified as Special Designations are located within proximity of Alternative 1:

Brownfield Location Boundaries - See Comments under Contaminated Sites issue regarding Brownfield Redevelopment Areas.

Special Flood Hazard Areas - See Comments under Floodplains issue regarding potential floodplain

impacts.

Public Lands - See Comments under Recreation Areas issue regarding potential impacts to public lands and sensitive recreational/natural resource areas.

Prime Farm Land - There are three tracts of land within the 500-feet buffer distances (Kalmia, Johns, Dothan) that are designated Prime Farm Land. Prime farm land is a designation assigned by the US Department of Agriculture for land that has the best combination of physical and chemical characteristics for producing food, feed, forage, fiber, and oilseed crops and is also available for these uses. It has the soil quality, growing season, and moisture supply needed to produce economically sustained high yields of crops when treated and managed according to acceptable farming methods. Prime farmland in the U.S. has been prone to conversion when in proximity to urban growth areas. Having property designated as USDA prime farm land can help with growth management and resource conservation efforts. Zoning and conservation easements help to preserve prime farm land resources. FDOT should consult with appropriate regulatory agencies (e.g., NRCS) regarding potential impacts to prime farm land.

Outstanding Florida Waters - A review of GIS analysis data at the programming screen phase of the project indicates that the Blackwater River is within 100 feet of the proposed project. The Blackwater River is listed as an Outstanding Florida Water (OFW). OFWs are provided the highest level of protection under the Florida Administrative Code (F.A.C.). Degradation of water quality in an OFW is prohibited except under certain circumstances. Pollutant discharges must not lower existing ambient water quality. Any activity within an OFW requiring a Florida Department of Environmental Protection (FDEP) Environmental Resource Permit (ERP) must be deemed to be clearly in the public interest. FDOT should coordinate and consult with FDEP requiring specific permitting requirements relating to this OFW. Increased and/or future development in the corridor surrounding the project may also have indirect and cumulative impacts on the Blackwater River and its tributaries.

EPA is assigning a moderate degree of effect to this issue due to the fact that there are sensitive environmental and natural resource areas located directly adjacent to the project. Also, the possibility of increased future development in the area would have indirect and cumulative impacts on these types of resources.

Coordinator Feedback: None

- No review submitted from the FL Department of Agriculture and Consumer Services
- No review submitted from the Federal Highway Administration

Water Quality and Quantity

Coordinator Summary

4 Summary Degree of Effect

Water Quality and Quantity Summary Degree of Effect: Substantial

Reviewed By:
FDOT District 3 (5/12/2010)
Comments:
The Florida Department of Transportation (FDOT) has reviewed the comments from the US Environmental Protection Agency (USEPA), the Florida Department of Environmental Protection (FDEP) and Northwest

Florida Water Management District (NWFWMD) and recommends a Degree of Effect of Substantial.

FDOT acknowledges that protecting water resources such as surface water quality is a priority of federal and state environmental agencies. All agencies commented that every effort should be made to maximize the treatment of stormwater runoff, because area stormwater discharges to the Blackwater River and eventually to the Yellow River Marsh Aquatic Preserve, both designated Outstanding Florida Waters (OFW) under section 62-302.700(9), F.A.C., and afforded a high level of protection under sections 62-4.242(2) and 62-302.700, F.A.C. Pursuant to section 373.414(1), F.S., direct impacts to these waterbodies and associated wetlands must be demonstrated to be "clearly in the public interest" as part of the Environmental Resource Permitting (ERP) process. In addition, the permit applicant may be required to demonstrate that the proposed stormwater system meets the design and performance criteria established for the treatment and attenuation of discharges to OFWs, pursuant to Chapter 62-346, F.A.C., and the DEP and NWFWMD ERP Applicant's Handbook.

FDOT is also taking note of the USEPA and NWFWMD comments that the various Alternatives are located within proximity to water bodies that are impaired for various pollutants (coliforms and mercury). The PD&E study will include a review of water quality standards in water bodies listed on the Clean Water Act 303(d) list of impaired waters. The western end of the segment lies in a subwatershed of the Blackwater River which is verified impaired for coliforms and mercury. The GIS analysis indicates 6 wells within a 500 foot buffered polygon. The western end of the polygon lies in an area "vulnerable" to contamination of the Floridan Aquifer and the majority of the polygon shows as "more vulnerable" to contamination of the surficial aquifer, according to the Florida Aquifer Vulnerability Assessment. In addition, approximately 18 acres of the buffered polygon have a slope greater than 10 percent, mainly on the southern bank of the Blackwater River floodplain. This ranks as one of the lower amounts of the six alternatives. Steep slopes are susceptible to erosion initiated by ground disturbance.

NWFWMD also added a comment that the Blackwater River and its receiving water, Blackwater Bay, are components of the larger Pensacola Bay Watershed and are Surface Water Improvement and Management (SWIM) priority waters of the NWFWMD. It should be noted that the river and floodplain corridor are priority for acquisitions for NWFWMD. The river is federally designated critical habitat for the Gulf sturgeon (Acipenser oxyrinchus desotoi). Also, NWFMD expressed concern about impacts to Clear Creek or any disturbance of the escarpment west of the creek because it could subject this water body to water quality problems. FDOT understands the request to review this alternative's alignment because in the area of the Clear Creek escarpment, it veers away from the powerline.

Considering the data provided as well as internal data and analysis, all of the proposed alternatives would have substantial impacts to water resources. According to the NWFWMD, the apparent least adverse impact would occur under Alternative 1, followed by Alternative 2. Alternatives 3, 4, 5 and 6 have greater wetland impacts, infringe on protected conservation lands, and have greater potential secondary and cumulative impacts. Alternative 3 has the greatest impact to floodplains, and Alternatives 4, 5 and 6 are more vulnerable to storm surges. Alternative 2 presents a concern due to alignment along a steeply sloped, erosion-prone valley wall and proximity to a stream.

FDOT will use appropriate storm water treatment systems, best management practices (BMPs), and land planning to prevent non point source pollution as suggested by the NWFWMD.

No Comments were received from the Federal Highway Administration (FHWA).

ETAT Reviews for Water Quality and Quantity

4 ETAT Review by Leigh Brooks, Northwest Florida Water Management District (01/29/2010)

Water Quality and Quantity Effect: Substantial

Coordination Document: To Be Determined: Further Coordination Required

Identified Resources and Level of Importance:
Surface water - Stormwater runoff from this project would directly affect the Blackwater River and its extensive floodplain, Clear Creek and one unnamed intermittent stream. The Blackwater River and its receiving water Blackwater Bay are components of the larger Pensacola Bay Watershed and are Surface Water Improvement and Management (SWIM) priority waters of the NWFWMD. The District has identified the river and floodplain corridor as a priority for acquisition. The Blackwater River receives additional protection as an Outstanding Florida Water. The river is federally designated critical habitat for the Gulf sturgeon (Acipenser oxyrinchus desotoi).

The western end of the segment lies in a subwatershed of the Blackwater River which is verified impaired for fecal coliforms and mercury.

Ground water - GIS analysis indicates 6 wells within a 500 foot buffered polygon. The western end of the polygon lies in an area "vulnerable" to contamination of the Floridan Aquifer and the majority of the polygon shows as "more vulnerable" to contamination of the surficial aquifer, according to the Florida Aquifer Vulnerability Assessment. The District has identified uplands at the southern terminus of the corridor for acquisition to protect groundwater recharge.

Slope - Approximately 18 acres of the buffered polygon have a slope greater than 10 percent, mainly on the southern bank of the Blackwater River floodplain. This ranks as one of the lower amounts of the six alternatives. Steep slopes are susceptible to erosion initiated by ground disturbance.

Comments on Effects to Resources:
Construction and long-term use of roadway facilities would generate non-point source pollution associated with stormwater runoff and would impact receiving water bodies and wetlands. Crossing of Clear Creek or disturbance of the escarpment west of the creek could subject this water body to water quality problems. It is not explained why the alignment in the area of the Clear Creek escarpment veers away from the powerline.

Assurances should be provided that stormwater management and treatment as well as erosion control of sloped areas will be sufficient to prevent long-term, cumulative degradation of water quality and aquatic habitat.

Additional Comments (optional):
Considering the data provided as well as internal data and analysis, all of the proposed alternatives would have substantial impacts to water resources. The apparent least adverse impact would occur under Alternative 1, followed by Alternative 2. Alternatives 3, 4, 5 and 6 have greater wetland impacts, infringe on protected conservation lands, and have greater potential secondary and cumulative impacts. Alternative 3 has the greatest impact to floodplains, and Alternatives 4, 5 and 6 are more vulnerable to storm surges. Alternative 2 presents a concern due to alignment along a steeply sloped, erosion-prone valley wall and proximity to a stream.

Appropriate stormwater treatment systems, best management practices, and land planning must be employed to prevent nonpoint source pollution and other potential impacts. The crossing for Clear Creek needs to be more clearly described in order to assess potential impacts. Roadway design should incorporate extended elevated bridges spanning the full floodplain with no supports in the flow way to reduce impacts to wetlands, allow for hydrologic and habitat connectivity, and protect water quality.

Project work would require stormwater permitting in compliance with the Environmental Resource Permitting program, per Chapter 62-346, F.A.C. Additional local permit requirements may apply as well.

Coordinator Feedback: None

3 ETAT Review by Lauren P. Milligan, FL Department of Environmental Protection (01/29/2010)
Water Quality and Quantity Effect: Moderate

Coordination Document: Permit Required

Identified Resources and Level of Importance:
Every effort should be made to maximize the treatment of stormwater runoff from the proposed highway connector project, as area stormwater discharges to the Blackwater River and eventually to the Yellow River Marsh Aquatic Preserve, both designated Outstanding Florida Waters (OFW) under section 62-302.700(9), F.A.C., and afforded a high level of protection under sections 62-4.242(2) and 62-302.700, F.A.C. Pursuant to section 373.414(1), F.S., direct impacts to these waterbodies and associated wetlands must be demonstrated to be "clearly in the public interest" as part of the Environmental Resource Permitting (ERP) process. We recommend that the PD&E study include an evaluation of existing area stormwater treatment adequacy and details on the future stormwater treatment facilities. The permit applicant may be required to demonstrate that the proposed stormwater system meets the design and performance criteria established for the treatment and attenuation of discharges to OFWs, pursuant to Chapter 62-346, F.A.C., and the DEP and NWFWMD ERP Applicant's Handbook.

Comments on Effects to Resources:
Stormwater runoff from the road surface may alter adjacent wetlands and surface waters through increased pollutant loading. Natural resource impacts within and adjacent to the proposed highway right-of-way will likely include alteration of the existing surface water hydrology and natural drainage patterns, and reduction in flood attenuation capacity of area creeks, ditches, and sloughs as a result of increased impervious surface within the watershed. Stormwater treatment should be designed to maintain the natural pre-development hydroperiod and water quality, as well as to protect the natural functions of adjacent wetlands, floodplains, and waterbodies.

Coordinator Feedback: None

4 ETAT Review by Madolyn Dominy, US Environmental Protection Agency (01/31/2010)
Water Quality and Quantity Effect: Substantial

Coordination Document: No Selection

Identified Resources and Level of Importance:
Resources: Water quality, surface water, groundwater

Level of Importance: These resources are of a high level of importance in the State of Florida. A substantial degree of effect is being assigned to this issue.

Comments on Effects to Resources:
Protecting water resources such as surface water quality is a priority of federal and state environmental agencies. Primary sources of surface water quality impairment include point and non-point sources. A primary concern regarding water quality for the proposed project is the impact to

surface water quality as a result of stormwater runoff into nearby surface water bodies. Stormwater runoff from the roadway would directly affect Blackwater River and other surface water bodies (such as Clear Creek). Blackwater River drains to Blackwater Bay and is part of the Pensacola Bay watershed.

Stormwater runoff from urban sources, including roadways, carries pollutants such as volatile organics, petroleum hydrocarbons, heavy metals, and pesticides/herbicides. Proper stormwater conveyance, containment, and treatment will be required in accordance with state and federal regulations and guidelines. A comprehensive evaluation of stormwater management issues in the project drainage basins (watershed) should be conducted. The construction of the SR 87 Connector could lead to increased growth, development, and population in this section of Santa Rosa County. Increased development leads to the increase of impervious surfaces (leading to stormwater runoff). Stormwater management issues become more critical to the reduction of pollution into surface waters.

The Blackwater River is listed as an Outstanding Florida Water (OFW). OFWs are provided the highest level of protection under the Florida Administrative Code (F.A.C.). Degradation of water quality in an OFW is prohibited except under certain circumstances. Pollutant discharges must not lower existing ambient water quality. Any activity within an OFW requiring a Florida Department of Environmental Protection (FDEP) Environmental Resource Permit (ERP) must be deemed to be clearly in the public interest. FDOT should coordinate and consult with FDEP requiring specific permitting requirements relating to this OFW. Increased and/or future development in the corridor surrounding the project may also have indirect and cumulative impacts on the Blackwater River and its tributaries.

Another issue of concern regarding water quality is the potential for the project to impact any private or public drinking water wells identified as being within the project area. A review of the presence of and/or location of drinking water wells should be identified. The project should avoid impact to any private or public potable drinking water wells or their source. Coordination with local and state drinking water agencies may be necessary.

The various Alternatives are located within proximity to water bodies that are impaired for various pollutants (fecal coliform and mercury). The PD&E study should include a review of water quality standards in water bodies listed on the Clean Water Act 303(d) list of impaired waters. It should also evaluate sources of water quality impairments and TMDL requirements and how these regulations and/or requirements may affect the proposed project and environmental resource permits. It is recommended that FDOT consult with the Florida Department of Environmental Protection water quality program on this issue.

The proposed SR 87 Connector will include a bridge crossing over the Blackwater River and possibly other water bodies. Construction activities such as construction of a new bridge structure would likely have direct, indirect, and cumulative impacts on these surface waters. Impacts should be evaluated and clearly documented in PD&E technical documents or reports. Various bridge construction alternatives and opportunities to avoid or minimize impacts to water quality should be evaluated and considered to the greatest extent practicable.

Due to the potential to have a significant impact on surface water bodies, the PD&E study should include an indepth review of surface water quality data, any water quality concerns in nearby surface waters and wetlands, and groundwater concerns and/or issues. FDOT should consult with FDEP and the Northwest Florida Water Management District on stormwater permitting issues and other water quality issues relating to point and nonpoint source discharges into surface water bodies.

Coordinator Feedback: None

- No review submitted from the Federal Highway Administration

Wetlands

Coordinator Summary

4 Summary Degree of Effect

Wetlands Summary Degree of Effect: Substantial

Reviewed By:
FDOT District 3 (4/21/2010)
Comments:
The Florida Department of Transportation (FDOT) has evaluated comments from the FL Department of Environmental Protection (FDEP), the US Environmental Protection Agency (USEPA), the Northwest Florida Water Management District (NWFWMD), US Fish and Wildlife, National Marine Fisheries Service and the US Army Corps of Engineers (ACOE) and recommends a Degree of Effect of Substantial.

The FDOT understands the importance of the wetlands in the project area and we will make every effort to prioritize the alternatives, as well as the final alignment within the selected alternative, utilizing agency comments in order to reduce to the extent practicable any adverse impacts. Many of the comments made about the project were similar for all of the above agencies. The FDOT understands the common concerns, as per the agencies requests, that must be included in the PD&E Study process to be the following:

1. The GIS review found wetlands within 100, 200, and 500 ft buffers of all alternatives. FDOT understands that all alternatives will have an impact to water resources that must be mitigated.
2. The project area encompasses a major river system, the Blackwater and Big Coldwater Creek, Clear Creek and Pond Creek Tributaries.
3. Permitting - An environmental resource permit will be necessary and will need to reflect efforts made to reduce impacts. In addition, the project may require a Section 404 wetland permit.
4. The Blackwater River - designated Special Outstanding Florida Waters and Surface Water Improvement and Management (SWIM) priority waters - flows into the Yellow River Marsh Aquatic Preserve and Class II shellfish harvesting waters. The designations thus reflected in Chapters 253, 258, 373, and 403, F.S., afford the highest level of state protection to the Blackwater River and the downstream estuarine system of Blackwater Bay and East Bay. Every effort should be made to minimize impacts to these areas.
5. Possible Direct Effects that should be reviewed include stream diversion, wetland fill, erosion, etc. Indirect effects include stormwater runoff, increased pollutants into surface waters and wetlands (water quality), etc.
6. The Blackwater River is included in Critical Habitat Unit 4 - the Yellow River System - for the federally threatened Gulf sturgeon.

Comments on Alternative 1 were made by several agencies. The FLDEP stated that the EST indicated there are 184.2 acres of palustrine and 5.1 acres of riverine wetlands within the 500 ft buffer zone. FDOT will use this information during the PD&E study as a comparison to the other alternatives' impacts. The NWFWMD and USFWS further reviewed the NWI wetlands as well and stated that Alternative 1 has the second LEAST wetland acreage impact of the six alternatives. They further added that the alternative lies in the Gulf Coastal Lowlands and Western Highlands physiographic provinces and the Southern Pine Plains and Hills ecoregion. The alternative goes through a wetland designated as critical habitat for the reticulated flatwoods salamander (Ambystoma bishop), a federally listed endangered species. A known historic breeding pond for the flatwoods salamander, vegetated with pond cypress and slash pine, is located on private property adjacent to Alternatives 1-3. This pond and its associated uplands are designated as Critical Habitat Unit RFS-2, Subunit A (162 acres). FDOT also notes the comments include that White-top pitcherplant (Sarracenia leucophylla) and Curtiss' sandgrass (Calamovilfa curtissii), state-endangered and state-threatened wetland plants respectively, occur within 600 feet of the alternative, and there is potential for them to occur within the alternative. Threatened and Endangered Species reviews will be done as part of the PD&E Study.

Current land use according to 2004 FDEP Land Use and Land Cover is primarily electrical power transmission lines, mixed upland and wetland forests, and coniferous plantations. The NWFWMD commented that Alternative 1, followed by Alternative 2 would have the apparent least adverse impacts. Finally, the NWFWMD also noted that Alternative 1 coincides for the most part with an existing utility alternative, thus minimizing new habitat fragmentation. Roughly 20 percent of this alternative is wetlands.

The National Marine Fisheries Services (NMFS) also commented on Alternative 1. After a site inspection on January 12, 2010 to assess the potential concerns within Pensacola Bay, East Bay, Blackwater Bay, and the lower reaches of Blackwater River, they found that it does not appear Alternative 1 will directly impact NMFS trust resources. However, FDOT understands that stormwater treatment systems must be designed to prevent indirect impacts to Blackwater Bay, East Bay, and Pensacola Bay.

Finally, the USACOE commented that the EST found that approximately 33.8 acres of NWI Palustrine wetlands and 0.7 acres of Blackwater River exist within the 100 ft buffer. They commented that Alternative 1 provides the third LEAST overall impacts to jurisdictional waters of the United States and appears to be the most favorable to the purpose and need of the project and the geographical areas the alternative is intended to service than any of the other alternatives.

Finally, there were several similar recommendations that should be noted that will be included as part of the PD&E Study. They were:

1. Early interagency planning and coordination of wetland mitigation alternatives are required in accordance with Section 373.4137, Florida Statutes;
2. The design of bridges and culverts should be adjusted to minimize unavoidable impacts;
3. Stormwater treatment systems should be designed to prevent degraded water from reaching estuarine and marine habitats;
4. Mitigation measures should be implemented to replace the areal extent as well as the functions and values of the aquatic resources that would be impacted.

The FDOT is aware that suitable mitigation measures include wetland restoration or enhancement, culvert/bridge design measures to enhance fish and wildlife movement at crossings, stream restoration measures such as replacing riprap with biotechnical erosion controls, or restoring suitable meander geometry. In addition, land acquisition and mitigation opportunities proximate to the project impacts may be the best options to offset wetland functional losses.

A Wetlands Evaluation Report (WER) and Endangered Species Biological Assessment (ESBA) will be prepared as part of the PD&E Study. Coordination with the commenting agencies will occur throughout the PD&E Study.

No Comments were received from the Federal Highway Administration (FHWA).

ETAT Reviews for Wetlands

2 ETAT Review by David A. Rydene, National Marine Fisheries Service (01/15/2010)

Wetlands Effect: Minimal

Coordination Document: No Selection

Identified Resources and Level of Importance:
Pensacola Bay, East Bay, Blackwater Bay and the lower reaches of the Blackwater River. These systems contain estuarine and marine habitats used by federally-managed fish species and their prey.

Comments on Effects to Resources:
Alternative 1 - NMFS staff conducted a site inspection of the project area on January 12, 2010, to assess potential concerns to living marine resources within Pensacola Bay, East Bay, Blackwater Bay, and the lower reaches of the Blackwater River. The lands adjacent to the proposed alignment appear to be mostly forested palustrine wetlands. It does not appear that Alternative 1 will directly impact NMFS trust resources. However, the road would cross both the Blackwater River (just northeast of Cooper Basin) and Clear Creek, both of which drain to Blackwater Bay, East Bay, and Pensacola Bay. Therefore, the project may result in indirect impacts to downstream NMFS trust resources. Use of the road could result in an increase in the amount of sediment, oil and grease, metals, and other pollutants reaching estuarine habitats utilized by marine fishery resources. Therefore, NMFS recommends that stormwater treatment systems be designed to prevent degraded water from reaching estuarine and marine habitats. Best management practices should be employed during road construction to prevent siltation of downstream estuarine habitats. Additionally, the manner in which the road may affect drainage within the watershed and hydrologic functions should be considered.

Coordinator Feedback: None

3 ETAT Review by Randy Turner, US Army Corps of Engineers (12/24/2009)
Wetlands Effect: Moderate

Coordination Document: No Selection

Identified Resources and Level of Importance:
A review of GIS data provided in the screening tool indicates approximately 33.8 acres of NWI Palustrine wetlands and 0.7 acres of the Blackwater River exist within the 100-foot buffer. The wetlands appear to be high quality. The subject wetlands play a vital role for flood storage, water quality issues, and drainage for the surrounding areas. A functional analysis would determine the extent of their value.

Comments on Effects to Resources:
Alternative 1 provides the third least overall impacts to jurisdictional waters of the United States and appears to be the most favorable to the purpose and need of the project and the geographical areas the corridor is intended to service than any of the other alternatives. Direct impacts would include the elimination of functions and values of the wetlands within the roadway footprint, any disturbed buffer, and create secondary effects along adjacent waters/buffer.

Coordinator Feedback: None

4 ETAT Review by Leigh Brooks, Northwest Florida Water Management District (01/29/2010)
Wetlands Effect: Substantial

Coordination Document: To Be Determined: Further Coordination Required

Identified Resources and Level of Importance:
Analysis provided shows that within a 500-foot buffer there are 144 acres of wetlands as determined

by FDEP 2004 Land Use and Land Cover data (identified by DOT as NWFWMD Wetlands 2004) and 189 acres of NWI wetlands, mostly palustrine with some riverine wetlands. Adding water to FDEP Wetlands 2004 to provide a more direct comparison with NWI acreage results in 151 acres of wetlands and water. Roughly 20 percent of the corridor is wetlands. Alternative 1 has the second least wetland acreage impact of the six alternatives.

The corridor lies in the Gulf Coastal Lowlands and Western Highlands physiographic provinces and the Southern Pine Plains and Hills ecoregion. The corridor goes through a wetland designated as critical habitat for the reticulated flatwoods salamander (Ambystoma bishop), a federally listed endangered species. White-top pitcherplant (Sarracenia leucophylla) and Curtiss' sandgrass (Calamovilfa curtissii), state-endangered and state-threatened wetland plants respectively, occur within 600 feet of the corridor, and there is potential for them to occur within the corridor. Current land use according to 2004 FDEP Land Use and Land Cover is primarily electrical power transmission lines, mixed upland and wetland forests, and coniferous plantations. Land cover is mostly wooded.

Comments on Effects to Resources:
New roadway construction would have direct impacts to environmentally sensitive wetlands. Potential indirect impacts include sedimentation, nonpoint source pollution, and hydrologic alternation. Impacts to riverine and palustrine habitats may be expected as a result of direct and indirect impacts.

Additional Comments (optional):
Considering the data provided as well as internal data and analysis, all of the proposed alternatives would have substantial impacts to water resources. The apparent least adverse impact would occur under Alternative 1, followed by Alternative 2. Alternatives 3, 4, 5 and 6 have greater wetland impacts, infringe on protected conservation lands, and have greater potential secondary and cumulative impacts. Alternative 3 has the greatest impact to floodplains, and Alternatives 4, 5 and 6 are more vulnerable to storm surges. Alternative 2 presents a concern due to alignment along a steeply sloped, erosion-prone valley wall and proximity to a stream.

It is noteworthy that Alternative 1 coincides for the most part with an existing utility corridor, thus minimizing new habitat fragmentation.

Early interagency planning and coordination of wetland mitigation alternatives are required in accordance with Section 373.4137, Florida Statutes. Advance consultation and consensus between the District and FDOT are required.

Coordinator Feedback: None

3 ETAT Review by Madolyn Dominy, US Environmental Protection Agency (01/29/2010)
Wetlands Effect: Moderate

Coordination Document: No Selection

Identified Resources and Level of Importance:
Resources: Wetlands, wetlands habitat, water quality

Level of Importance: These resources are of a high level of importance in the State of Florida and within the project corridor(s). Wetlands provide for water quality enhancement, flood storage capacity, drainage, and wildlife habitat. Due to the potential to directly impact wetlands, EPA is

assigning a moderate degree of effect to the wetlands issue for Alternatives 1 through 6.

Comments on Effects to Resources:
A review of GIS analysis data (National Wetlands Inventory) in the EST for wetlands indicates that there are wetlands present along the roadway corridor within the 100, 200, and 500 foot buffer distances for all Alternatives.

The project has the potential to impact wetland resources, including wetlands associated with Blackwater River and its associated tributaries. Development activities, including the construction of new roadways, have the potential to directly and/or indirectly affect wetlands, water quality, and aquatic habitats associated with clearing operations and construction of new stream or wetland crossings.

Any land clearing operations involving vegetation removal with mechanized equipment such as front -end loaders, backhoes, or bulldozers with sheer blades, rakes or discs in wetlands; or windrowing of vegetation, land leveling; or other soil disturbances are considered placement of fill material in wetlands and would likely require a Section 404 wetland permit. Any unavoidable wetland impacts should preferably be mitigated within the same watershed to result in no net loss of aquatic functions.

Other issues of concern include increased stormwater runoff and the increase of pollutants into surface waters and wetlands as a result of the roadway and other point and nonpoint sources. Design and planning should ensure that stormwater runoff does not enter surface waters directly. This can include the use of enhanced swales, stormwater ponds, and sediment basins to capture and treat post-construction stormwater runoff to minimize impacts to important aquatic resources and wetlands. Every effort should be made to maximize the treatment of stormwater. Stormwater treatment areas/ponds should be designed to protect the function of surrounding wetlands, floodplains, and surface water features.

It is recommended that the environmental phase (PD&E) of the project include delineation of wetlands; functional analysis of wetlands to determine their value and function; an evaluation of stormwater pond sites to determine their impact on wetlands; a review of surface water crossings (such as bridges) to determine their impact on wetlands and floodplains; avoidance and minimization strategies for wetlands; and mitigation plans to compensate for adverse impacts.

Indirect and cumulative effects on wetlands should be evaluated to identify and quantify incremental and cumulative impacts on natural resources (wetlands) as a result of past, present, and reasonably foreseeable actions, including the proposed project and other land use actions.

Coordinator Feedback: None

4 ETAT Review by Mary Mittiga, US Fish and Wildlife Service (01/22/2010)
Wetlands Effect: Substantial

Coordination Document: To Be Determined: Further Coordination Required

Identified Resources and Level of Importance:
Water resources within the proposed corridor include the Blackwater River, its floodplain, and potentially high quality wetland communities. The Blackwater River is designated as an Outstanding Florida Water and is included in Critical Habitat Unit 4 - the Yellow River System - for the federally threatened Gulf sturgeon. The Blackwater River drains to Blackwater Bay, part of the Yellow River

Marsh Aquatic Preserve. Wetlands may include areas of cypress/gum swamp, pitcher plant prairie, and wet pine flatwoods. A known historic breeding pond for the endangered reticulated flatwoods salamander (Ambystoma bishopi) vegetated with pond cypress and slash pine is located on private property adjacent to Corridors 1-3. This pond and its associated uplands are designated as Critical Habitat Unit RFS-2, Subunit A (162 acres).

Comments on Effects to Resources:
The Blackwater River, its tributaries, floodplain, and associated wetlands provide habitat for a large number of fish and wildlife species including federally protected species. The Service recommends implementing measures to protect fish and wildlife resources from potential impacts resulting from the proposed project. Direct impacts may include, but are not limited to, stream diversion or culverting, wetland fill, erosion, siltation, and loss of shoreline vegetation. Indirect impacts may include introduction of exotic species adapted to colonizing disturbed areas, fragmentation of contiguous habitats, altered hydrology, increases in stormwater discharge, altered patterns of sediment erosion and deposition, increased impervious surface area, and additional disturbance in newly opened areas.

Impacts to wetlands and waterbodies can be minimized in a number of ways. Avoidance is often the most effective measure to reduce impacts; it can be accomplished either by locating the route to circumvent the most valuable resources or by reducing the project footprint. Unavoidable impacts can be minimized by adjusting the design of bridges or culverts. The Service recommends using fluvial geomorphology analyses to design crossing structures that permit normal bedload movement, a low flow channel to allow fish passage and preserve water quality, and additional culverts installed above bankfull level to maintain the hydrologic regime of floodplain areas. These measures may also result in a reduction of blowout events and maintenance requirements. Measures should be implemented to minimize any hydrologic alteration to surrounding wetlands, especially to habitat used by the flatwoods salamander. Information should be provided on Best Management Practices (BMPs) to prevent degradation of aquatic resources from erosion, siltation, and nutrient discharges associated with the project site. Specialized measures may be required to prevent inadvertent impacts to high quality wetlands and designated critical habitat units.

After all efforts have been taken to avoid and minimize impacts to wetlands and other waters of the United States, mitigation measures should be implemented to replace the areal extent as well as the functions and values of the aquatic resources that would be impacted. Suitable mitigation measures include wetland restoration or enhancement, culvert/bridge design measures to enhance fish and wildlife movement at crossings, stream restoration measures such as replacing riprap with biotechnical erosion controls, or restoring suitable meander geometry. Land acquisition and mitigation opportunities proximate to the project impacts may be the best options to offset wetland functional losses.

Coordinator Feedback: None

4 ETAT Review by Lauren P. Milligan, FL Department of Environmental Protection (01/29/2010)
Wetlands Effect: Substantial

Coordination Document: Permit Required

Identified Resources and Level of Importance:
The proposed project area encompasses a major river system - the Blackwater River and Big Coldwater Creek, Clear Creek and Pond Creek tributaries - together with associated floodplains and wetland areas, and is hydrologically connected to Blackwater Bay, East Bay and Pensacola Bay in

the Blackwater River and Pensacola Bay basins.

The EST indicates that there are 184.2 acres of palustrine and 5.1 acres of riverine wetlands within the 500-ft. buffer zone of the project.

Comments on Effects to Resources:
The environmental resource permit applicant will be required to eliminate or reduce the proposed wetland resource impacts of highway connector construction to the greatest extent practicable:
- Minimization should emphasize avoidance-oriented corridor alignments, wetland fill reductions via pile bridging and steep/vertically retained side slopes, and median width reductions within safety limits.
- Wetlands should not be displaced by the installation of stormwater conveyance and treatment swales; compensatory treatment in adjacent uplands is the preferred alternative.
- After avoidance and minimization have been exhausted, mitigation must be proposed to offset the adverse impacts of the project to existing wetland functions and values. Significant attention is given to forested wetland systems and seagrass beds, which are difficult to mitigate.
- The cumulative impacts of concurrent and future road improvement projects in the vicinity of the subject project should also be addressed.

Additional Comments (optional):
In general, DEP recommends that transportation improvements projects not infringe upon environmentally sensitive areas such as flood zones, rare or endangered species' habitats, wetlands, or natural drainage courses. Such lands should be preserved for their environmental and aesthetic significance. The Blackwater River - designated Special Outstanding Florida Waters and Surface Water Improvement and Management (SWIM) priority waters - flows into the Yellow River Marsh Aquatic Preserve and Class II shellfish harvesting waters. The designations thus reflected in Chapters 253, 258, 373, and 403, F.S., afford the highest level of state protection to the Blackwater River and the downstream estuarine system of Blackwater Bay and East Bay.

Coordinator Feedback: None

- No review submitted from the Federal Highway Administration

Wildlife and Habitat

Coordinator Summary

4 Summary Degree of Effect

Wildlife and Habitat Summary Degree of Effect: Substantial

Reviewed By:
FDOT District 3 (4/21/2010)
Comments:
The Florida Department of Transportation (FDOT) has evaluated comments from the Naval Air Station Whiting Field, US Fish and Wildlife and the FL Fish and Wildlife Conservation Commission and recommends a Degree of Effect of Substantial.

FDOT understands the Naval Air Station's (Whiting Field) concern over the potential for increased bird animal strike hazard for Alternative 1 because NASWF aircraft fly entry and exit routes along the SR 87/89 Corridor. If this Alternative is chosen, it is understood mitigation strategies may need to be taken like minimizing stormwater retention to 48 hours, bird monitoring, and/or mowing schedule updates to reduce

bird animal strike hazards.

The US Fish and Wildlife Service commented that all six alternatives cross critical habitat for the threatened Gulf Sturgeon (Acipenser oxyrinchus desotoi). Alternatives 1-3 cross 0.9 miles upstream of Cooper Basin, an area where fish congregate while Alternatives 4-6 cross the Blackwater River south of Milton, where fish are not known to congregate. Also, Alternatives 1-3 may impact flatwoods salamander habitat while all alternatives cross waters that are accessible to the federally endangered West Indian manatee (manatus latirostris). In addition, there is potential for the endangered red-cockaded woodpecker (RCW) (Picoides borealis) to occur along the proposed roadway where suitable habitat is present. The Department understands the importance of protecting the above species and their habitat. We have taken note of the proposed impact minimization techniques the US Fish and Wildlife Service listed in their comments. These include measures to protect the Gulf Sturgeon, including limiting in-water work activities when Gulf Sturgeon are present to the extent practicable, as well as using appropriate Standard Manatee Construction Conditions if they are found to be in the project area. In addition, the assessment of critical habitat for the flatwoods salamander and the RCW will be completed as suggested in the comments. Finally, the Department understands that new roadways may affect migrating animals and potentially costly measures such as designing bridges to span riverine floodplains and preserving wide riparian buffers should be reviewed and considered when prioritizing the alternatives.

The Florida Fish and Wildlife Conservation Commission (FWC) completed a 500 ft GIS analysis of the 6 Alternatives within the 4 corridors. The results of the analysis indicated that all six Alternative Corridors can be considered moderately to mostly rural in nature, as High and Low Impact Urban Lands vary from a low of only 79.0 acres for Alignment 3 to a high of 208.2 acres along Alignment 6. Wetlands along the Alignments vary from a low of 143.1 acres for Alignment 2, to a high of 256.3 acres for Alignment 6. Upland forests range from a low of 318.3 acres for Alignment 5 to a high of 763.8 acres along Alignment 3. The wetlands are predominately characterized by freshwater marsh, cypress swamp, bay swamp, hardwood swamp, mixed wetland forest, and open water, while uplands are represented by upland hardwood forest, mixed hardwood-pine forests, pinelands, longleaf pine-turkey oak sandhills, and shrub and brushland. Based on known range and preferred habitat type, the following species listed by FWC as Endangered (E), Threatened (T), or Species of Special Concern (SSC) may occur and be impacted: gopher tortoise (T), Eastern indigo snake (T), Florida pine snake (SSC), gopher frog (SSC), pine barrens treefrog (SSC), snowy egret (SSC), little blue heron (SSC), tricolored heron (SSC), white ibis (SSC), wood stork (E), Southeastern American kestrel (T), red-cockaded woodpecker (SSC), Gulf sturgeon (SSC), blackmouth shiner (E), and possibly the eastern chipmunk (SSC) and Florida black bear (T). In addition, we understand FWCs concern that all six Alternatives could adversely impact good to high quality upland and wetland habitat as indicated by scores of 6 to 7 or 6 to 8 (10 = high, 0 = Low) on FWC's Integrated Wildlife Habitat Ranking System map. We will investigate the location of Priority Wetlands and Biodiversity Hotspots as outlined by FWC utilizing the FWC GIS Shapefiles to ensure minimal impact while offering the public a safe new transportation corridor. Priority Wetlands for Wetland Dependent Listed Species are capable of supporting 1 to 3 focal species in uplands, and 1 to 3 focal species in wetlands. In addition, high quality areas of upland and wetland habitat that have been designated by FWC as Biodiversity Hotspots can support 3 to 4, 5 to 6, and 6 to 7 or more focal species; and are within regional areas officially designated as consultation areas for the listed Gulf Sturgeon, and the red-cockaded woodpecker. In addition, FDOT's environmental research will include habitat location assessments for the other species FWC notes in their comments as species of conservation need: eastern cottontail rabbit, northern red-headed woodpecker, hairy woodpecker, bobwhite, southeastern fox squirrel, spotted skunk, striped skunk, southern hognose snake, alligator snapping turtle, Gulf coast box turtle, Escambia map turtle, Gulf coast smooth softshell turtle, carpenter frog, Florida bog frog, seal salamander, bald eagle, peregrine falcon, loggerhead shrike, brown headed nuthatch, ironcolor shiner, speckled darter, and southern starhead topminnow. Another comment made by FWC was concern that all of the alternatives have the potential to impact the Blackwater River Heritage State Trail, the Coldwater Creek Preserve, the Blackwater River State Forest, the Black Water River Water Management Area, and the lands of the Naval Air Station at Whiting Field. With the exception of the Heritage Trail, we believe that we may be able to avoid these properties utilizing FWCs GIS shapefiles and Santa Rosa County's Parcel data to locate them. In addition, the Heritage Trail, if impacted, will be incorporated into the roadway cross section to ensure its location is not dramatically shifted from its existing position along the historic railroad alignment.

In addition, we will review the following Best Management Practices (BMPs) during this PD&E Study listed by FWC as we determine which Alternative will effectively provide a new transportation corridor, while causing the least amount of negative environmental and social impacts. The BMPs include the review of the existing corridor for potential improvements to minimize impacts, development of a vegetative cover map to be used to mitigate habitat loss, assurance that mitigation sites are in the same regional area, coordination with FWC on listed species surveys, inclusion of design options that include spanning streambeds and wetland floodplain areas where possible, and inclusion of drainage design options to reduce the need for offsite Drainage Retention Areas.

No Comments were received from the Federal Highway Administration (FHWA) or the US Forest Service.

ETAT Reviews for Wildlife and Habitat

4 ETAT Review by Scott Sanders, FL Fish and Wildlife Conservation Commission (01/19/2010)
Wildlife and Habitat Effect: Substantial

Coordination Document: To Be Determined: Further Coordination Required

Identified Resources and Level of Importance:
The Habitat Conservation Scientific Services Section of the Florida Fish and Wildlife Conservation Commission (FWC) has coordinated an agency review of ETDM #12597, Santa Rosa County, and provides the following comments related to potential effects to fish and wildlife resources on this Programming Phase project.

The Project Description Summary states that this project involves a Project Development and Environment (PD&E) Study to evaluate the potential for providing a new roadway corridor to serve as the missing link or bypass for connecting SR-87 South and SR-87 North as an Alternative to the existing shared facility of SR-87 South to SR-87 North via US-90, a portion of which runs through the Town of Milton, and is currently operating at a failing Level of Service (LOS F). According to information provided by the Florida Department of Transportation's (FDOT's) consultant, the No-build Alternative, and the Transportation System Alternative that involves improvements to intersections for traffic flow and safety and other measures along the existing Alignment will necessarily involve work in the downtown Historic District of Milton where Right-of-way expansion is problematic. However, since the existing SR-87 Alignment was not provided on the Environmental Screening Tool as one of the project options, we are unable to provide an assessment and comparison of fish and wildlife resource and habitat impacts together with the following four new corridors and six Alterative Alignments that have been identified for evaluation for improved mobility and safety on the project in the PD&E Study:

1. Corridor 1 (Alternative 1) extends from the existing intersection of US-90 and SR-87 South crossing the Blackwater River near the existing eastern power line easement; then continues to follow the power easement and connects to SR-87 North near the southern split of SR-87 North and SR-89, for a total length of about 6.5 miles.

2. Corridor 2 (Alternative 2) also runs to the north from the US-90 and SR-87 South intersection and crosses the Blackwater River near the easternmost power line crossing easement, and then runs just to the north of Corridor 1 adjacent to the Clear Water Creek environmental lands. This proposed route of about 7.2 miles then runs west to connect to SR-87 North near the northern split of SR-87 North and SR-89.

3. Corridor 3 (Alternative 3), which is about 10.5 miles in length, also runs to the north from the US-90 and SR-87 South intersection and crosses the Blackwater River near the easternmost power line crossing easement, then extends north on the east side of Whiting Field, possibly using portions of

the Pat Brown Road Right-of-way (ROW). North of Whiting Field, the corridor will attempt to pass through a narrow gap between the Nature Conservancy and Florida Forever Lands, and Whiting Field, at a location where it can intersect SR-87 North, south of Southridge Road and north of Whiting Field.

4. Corridor 4 (Alternatives 4, 5, & 6) will evaluate areas to the south of US-90, which will involve a new crossing of the Blackwater River between Bagdad and Milton. The southern corridor will generally head west from SR-87 South, sharing a portion of US-90 ROW that will be expanded, and connect to SR-87 North at the intersection of US-90 and SR-87 North. The western end of this corridor near SR-87 North will utilize the ROW of the Blackwater Heritage Trail, and incorporate the trail in the roadway cross section. This corridor is approximately 5.6 to 6.5 miles long.

A GIS analysis within 500 feet of each of the six Alternative Alignments 1, 2, 3, 4, 5, and 6 within Corridors 1, 2, 3, and 4 was accomplished; and Table 1 provides the acreage of native upland forests and forested and herbaceous wetland plant community types, along with man-altered land use types that include Agricultural lands and High and Low Impact Urban lands. The results of our analysis indicates that all six Alternative Alignments can be considered moderately to mostly rural in nature, as High and Low Impact Urban Lands vary from a low of only 79.0 acres for Alignment 3 to a high of 208.2 acres along Alignment 6. Wetlands along the Alignments vary from a low of 143.1 acres for Alignment 2, to a high of 256.3 acres for Alignment 6. Upland forests range from a low of 318.3 acres for Alignment 5 to a high of 763.8 acres along Alignment 3.

According to our assessment of all six Alternatives, wetlands are predominately characterized by freshwater marsh, cypress swamp, bay swamp, hardwood swamp, mixed wetland forest, and open water, while uplands are represented by upland hardwood forest, mixed hardwood-pine forests, pinelands, longleaf pine-turkey oak sandhills, and shrub and brushland. Man-altered land use types include High and Low Impact Urban lands, and Agricultural lands. Based on known range and preferred habitat type, the following species listed by our agency as Endangered (E), Threatened (T), or Species of Special Concern (SSC) may occur and be impacted directly by loss or degradation of habitat within the project area Right-of-way (ROW), or indirectly due to associated residential or commercial development within the adjacent regional area: gopher tortoise (T), Eastern indigo snake (T), Florida pine snake (SSC), gopher frog (SSC), pine barrens treefrog (SSC), snowy egret (SSC), little blue heron (SSC), tricolored heron (SSC), white ibis (SSC), wood stork (E), Southeastern American kestrel (T), red-cockaded woodpecker (SSC), Gulf sturgeon (SSC), blackmouth shiner (E), and possibly the eastern chipmunk (SSC) and Florida black bear (T).

The following wildlife species that may occur in and adjacent to the project area, while not officially listed, are considered by our agency as species of greatest conservation need due to long-term and chronic habitat loss: eastern cottontail rabbit, northern red-headed woodpecker, hairy woodpecker, bobwhite, southeastern fox squirrel, spotted skunk, striped skunk, southern hognose snake, alligator snapping turtle, Gulf coast box turtle, Escambia map turtle, Gulf coast smooth softshell turtle, carpenter frog, Florida bog frog, seal salamander, bald eagle, peregrine falcon, loggerhead shrike, brown headed nuthatch, ironcolor shiner, speckled darter, and southern starhead topminnow.

Furthermore, our analysis included an overall accounting, provided in Table 2, which includes a comparison of the potential for impacts or possible adverse interaction for all six Alternative Alignments with important and sensitive ecological features in the regional study area. Overall, our screening shows that all new Alignments have the potential for at least moderately high to substantial adverse effects on fish and wildlife and habitat resources. First, based on the information provided in the project description, all new Alignments would require construction of a new bridge across the Blackwater River and floodplain. Second, all six Alignments could adversely impact good to high quality upland and wetland habitat as indicated by scores of 6 to 7 or 6 to 8 (10 = high, 0 = Low) on FWC's Integrated Wildlife Habitat Ranking System map; impact areas designated by our agency as Priority Wetlands for Wetland Dependent Listed Species, which are capable of supporting 1 to 3 focal species in uplands, and 1 to 3 focal species in wetlands; impact high quality areas of upland and wetland habitat that have been designated by FWC as Biodiversity Hotspots that can

support 3 to 4, 5 to 6, and 6 to 7 or more focal species; and are within regional areas officially designated as consultation areas for the listed Gulf sturgeon, and the red-cockaded woodpecker. Furthermore, all Alignments could impact the Blackwater and Yellow Rivers and other streams which support listed and rare fish species, while some of these Alignments could in addition adversely affect Clear Creek and Pond Creek. Finally, all Alignments could impact the Blackwater River Heritage State Trail, while other Alignments in varying degrees could adversely impact the Coldwater Creek Preserve, Blackwater River State Forest, Black Water River Water Management Area, and the lands of the Naval Air Station at Whiting Field.

Comments on Effects to Resources:
Direct effects of the project could be substantial for all Alignments. Our analysis shows that all new Alignments have the potential for the direct loss of high quality and productive upland, wetland, and riverine habitat and will, to some degree, adversely impact public conservation lands by clearing within the ROW footprint, interchanges, and the construction of Drainage Retention Areas (DRAs).

Indirect effects could also be substantial since these new Alignments would cause detrimental habitat fragmentation and isolation of wetland and upland habitat; and result in impacts to a moderate number of listed species by decreased habitat connectivity and increased mortality through roadkills. Increased stormwater runoff could also degrade aquatic and wetland habitat by reduced water quality and through increased turbidity. Long-term Impacts from increased commercial and residential development could be encouraged and facilitated by the project and naturally follow the new roadway, causing significant loss and degradation of habitat, as could the construction of new secondary roads to connect with the new bypass. Public lands could be indirectly impacted by increased noise, artificial lighting, and possibly the reduced ability to perform prescribed burning necessary to maintain appropriate habitat conditions because of liability and concern for public safety due to smoke drift to the new roadway.

Additional Comments (optional):
The following recommendations and Best Management Practices (BMPs) are offered for consideration in future planning efforts so that adequate funding can be justified for the PD&E study to design the project in a manner to avoid, minimize, or mitigate project effects to wildlife species and their habitat:

1. The Project Description defines the No-Build Alternative and the Transportation System Management (TSM) Alternative along the existing alignment, in addition to the new Bypass Alternatives, as viable parts of the total project to be addressed in the PD&E Study. The TSM Alternative along the existing Alignment appears to have potential for the least impacts to fish and wildlife and habitat resources. If improvement of the existing Alignment is found not to be a viable option after further study, we recommend a concerted effort during the PD&E Study Phase to avoid, minimize or properly mitigate impacts to the fish and wildlife and habitat resources we have detailed in our assessment above.

2. A vegetative cover map and accounting by acreage for each plant community type should be made for the affected project area. Compensatory mitigation for all upland and wetland habitat loss should be accomplished. If wetlands are mitigated under the provisions of Chapter 373.4137 F.S., the proposed mitigation sites should be located within the immediate or same regional area; be functionally equivalent; equal to or of higher functional value; and as or more productive as the impacted wetlands. Land acquisition and restoration of appropriate tracts adjacent to existing public lands, or other tracts placed under conservation easement or located adjacent to large areas of jurisdictional wetlands that currently serve as regional core habitat areas, would be supported by our agency. An important focus of the selection process for mitigation lands for this project should include a strong consideration of, and habitat replacement for the listed and non-listed birds, mammals, amphibians, reptiles, and fish that are discussed above as potentially occurring in the project area.

3. Surveys for listed species should be accomplished within and adjacent to the ROW of all

Alignments and proposed sites for DRAs. The methodology for these surveys should be coordinated with FWC early in the PD&E Study and follow appropriate survey techniques or guidelines to determine presence, absence, or probability of occurrence of various species, and to assess habitat quality. These study methods should be designed considering the potential listed species discussed above. Please note that some species are known to use atypical habitat types and transitional habitat areas; therefore, due diligence and thorough coverage during field investigations are key to adequately determining presence or absence of all species. Based on the survey results, a plan should be developed to address direct, indirect, and cumulative effects of the project on wildlife and habitat resources, including listed species, and other important species we have included above. Avoidance, minimization, and mitigation measures should also be formulated and implemented. Permits may be needed from the FWC for impacts to the gopher tortoise, and possibly other listed species; and due diligence and coordination with FWC is recommended.

4. We strongly recommend that all new bridges over streams, and in particular the Blackwater River, be constructed to span completely the streambed and wetland floodplain along with the upland transitional area. We also recommend that FDOT develop and implement customized BMPs especially formulated for this project as they pertain to dredging and filling, control of siltation and turbidity, and the nutrient loading associated with discharge of roadside runoff, to reduce effects within freshwater basin wetlands and riparian systems. The PD&E Study should address the potential for treating roadside runoff within the median and roadside swales to reduce the need for offsite Drainage Retention Areas and avoid habitat loss. Appropriately designed fencing should also be erected within rural habitat areas to reduce roadkills, and improve public safety. The design of this fence should include smaller mesh at ground level to preclude access onto the roadway by various mammals, amphibians and reptiles. Our biologists are available to provide input on appropriate fence design.

5. Construction equipment staging areas; storage of oils, greases, and fuel; fill and roadbed material; and equipment maintenance activities should be sited in previously disturbed areas far removed from streams, wetlands, or surface water bodies. Staging areas, along with borrow areas, should also be surveyed for listed species. Close coordination with federal, state and local permitting agencies is recommended.

We appreciate the opportunity to provide input on highway design and the conservation of fish and wildlife resources. Please contact Terry Gilbert at (850) 402-6311 or email terry_gilbert@urscorp.com to initiate the process for further overall coordination on this project.

Coordinator Feedback: None

4 ETAT Review by Mary Mittiga, US Fish and Wildlife Service (01/22/2010)

Wildlife and Habitat Effect: Substantial

Coordination Document: To Be Determined: Further Coordination Required

Identified Resources and Level of Importance:
Federally Protected Species
Federally listed threatened and endangered species may occur along the proposed alignment. All six corridors cross critical habitat for the threatened Gulf sturgeon (Acipenser oxyrinchus desotoi). The Blackwater River from its confluence with Big Coldwater Creek downstream to its discharge into Blackwater Bay is included within Critical Habitat Unit 4 - the Yellow River System. Corridors 1-3 cross the Blackwater River approximately 0.9 mile upstream of Cooper Basin, an area where numerous fish congregate for summer resting and staging. Sturgeon occurrence drops significantly

upstream of Cooper Basin at the proposed crossing. Corridors 4-6 cross the Blackwater River just south of Milton. While fish migrate through this area, it is not a known major congregation site.

Corridors 1, 2, and 3 may impact Critical Habitat Unit RFS-2, subunit A, for the endangered reticulated flatwoods salamander. Threats to this unit from the proposed corridor include potential urban development, potential hydrologic alterations to the habitat, and the potential for fire suppression.

The proposed project includes work in waters accessible to the federally endangered West Indian manatee (Trichechus manatus latirostris), an occasional, warm month visitor to the panhandle.

There is potential for the endangered red-cockaded woodpecker (RCW) (Picoides borealis) to occur along the proposed roadway where suitable habitat is present.

Other Fish and Wildlife Resources
The Blackwater River, its tributaries, floodplain, and associated wetlands provide habitat for a large number of fish and wildlife species. Much of the Blackwater River floodplain ranks as Priority 1 (highest) and 2 conservation areas for rare species using the Florida Natural Areas Inventory (FNAI) Habitat Conservation Priorities Geographic Information System data layer. Corridors 2 and 3 will cross proposed acquisition lands for the Clear Creek/Whiting Field Florida Forever project. Corridor 3 will cross the Phase I project between Whiting Field Naval Air Station and a 1,400-acre block of conservation lands to the northeast acquired under Florida Forever in 2009. Corridor 2 will cross proposed acquisition lands for Phase II of the project to the southwest of Whiting Field. The purpose of these conservation lands is to create a conservation land buffer to the Naval Air Station, protect surrounding water bodies, and allow for expanded recreation opportunities for the State of Florida.

Comments on Effects to Resources:
Federally Protected Species
A complete description and map of Critical Habitat Unit 4 are given in the Designation of Critical Habitat for the Gulf Sturgeon Final Rule available on the internet at http://alabama.fws.gov/gs/. Measures to protect the Gulf sturgeon should be incorporated in your project plans, and should include construction constraints to avoid and minimize effects to the sturgeon, their riverine habitat, and the primary constituent elements (PCEs) of sturgeon critical habitat essential to their conservation. In-water work activities should be avoided to the extent practicable during periods when Gulf sturgeon are present in their riverine habitat.

Measures to avoid and minimize impacts to reticulated flatwoods salamander critical habitat should be included in your project plans. Affects to the PCEs of critical habitat should be specifically assessed. Information on PCEs is available in the Designation of Critical Habitat for Frosted Flatwoods Salamander and Reticulated Flatwoods Salamander Final Rule at: http://www.fws.gov/panamacity/species/pdf/FlatwoodsSalamander.pdf . Your review should address direct, secondary, and cumulative effects to both the wetland and upland components of critical habitat. Examples of indirect effects include hydrologic alteration, reduced ability to manage property by prescribed burning, spread of exotic nuisance species, and roadkill.

We recommend including appropriate Standard Manatee Construction Conditions for your project to provide protection measures for the manatee.

For the RCW, if work impacts pine stands 30 years of age the stand should be surveyed for RCW. No other records for federally listed species were identified with the FNAI database. However, we assume that listed species occur in suitable ecological communities. Site surveys should be made to determine the presence or absence of listed species whenever suitable habitat is present.

Other Fish and Wildlife Resources
During this early phase of project development, the Service recommends implementing measures to protect fish and wildlife resources from potential impacts resulting from the proposed project.

Corridors 2 and 3 will diminish the conservation value of the proposed acquisition lands for the Clear Creek/Whiting Field Florida Forever Project. Corridors 2 and 3 may facilitate growth in proximity to the Naval Air Station, impacting fish and wildlife habitat and reducing their land manager's ability to use prescribed burning to enhance conservation lands.

All the new corridors will result in further fragmentation of the regional landscape. Increasing fragmentation is correlated with isolated, less stable wildlife populations, particularly for small mammals. Roads form a barrier for taxa that are sensitive to surface microclimate changes (temperature, moisture, chemistry), and may detrimentally affect groups such as reptiles and amphibians which migrate annually to breeding sites. The Florida black bear and other wide-ranging species are especially vulnerable to roadkill because of frequent road crossing. Some measures which help maintain habitat linkage include designing bridges to span the riverine floodplain, preserving wide riparian buffers, and/or adding multi-species wildlife. These costs should also be incorporated in the project's cost-benefit analysis.

Degradation of adjacent habitat is a secondary effect of the proposed roadway, especially for migratory birds. Many migratory bird species prefer "deep woods" and require land tracts with low edge:area ratios. Increasing fragmentation results in smaller islands of habitat, favoring species adaptable to woodland edges. Mitigation costs for secondary effects in these habitats should be considered.

Coordinator Feedback: None

2 ETAT Review by Randy Roy, Naval Air Station Whiting Field (02/14/2010)
Wildlife and Habitat Effect: Minimal

Coordination Document: To Be Determined: Further Coordination Required

Identified Resources and Level of Importance:
Alternative 1 may have minimal to moderate impact on Naval Air Station Whiting Field's mission.

Comments on Effects to Resources:
Potential for increased Bird Animal Strike Hazards. Retention pond development to support project alternatives - Possible measures/mitigation strategies to consider would be to minimize storm water retention to 48-hours, provide active bird monitoring, and implement mowing schedules (Bird Animal Strike Hazard concerns). NASWF mission aircraft routinely fly entry and exit routes along/adjacent the 87/89 corridor.

Coordinator Feedback: None

- No review submitted from the Federal Highway Administration

ETAT Reviews: Cultural

Historic and Archaeological Sites

Coordinator Summary

3 Summary Degree of Effect

Historic and Archaeological Sites Summary Degree of Effect: Moderate

Reviewed By:
FDOT District 3 (4/21/2010)
Comments:
The Florida Department of Transportation (FDOT) has reviewed the comments submitted by the Federal Highway Administration (FHWA), the Florida Department of State, and the Miccosukee Tribe of Indians of Florida, and recommends a Degree of Effect of Moderate.

The FDOT is aware of Historic State Road 1 that parallels US 90. The design for a possible crossing will include measures to address this historic facility. Likewise, as part of this Study the Department will be performing a CRAS to identify and evaluate any cultural resources that might be affected by this project.

No comments were received from the Seminole Tribe of Florida.

ETAT Reviews for Historic and Archaeological Sites

3 ETAT Review by Cathy Kendall, Federal Highway Administration (04/08/2010)

Historic and Archaeological Sites Effect: Moderate

Coordination Document:PD&E Support Document As Per PD&E Manual

Identified Resources and Level of Importance:
Alternatives 1, 2 and 3 may have fewer impacts for historic resources than alternatives 4-6. Alternatives 1-3 have a potentially historic structure located within 500 feet of the proposed road improvement. Alternatives 4-6 have a potentially historic structure within 200 feet of the proposed improvement. Alternatives 4-6 also have a potentially significant archaeological site (lumber mill) located within 100 feet. Alternatives 4-6 also have a potentially historic bridge located within 500 feet.

All alternatives potentially impact SR 1, an NRHP resource known as Red Brick Road.

Alternative 4 goes through a portion of the town of Milton, and would potentially impact historic structures that have not yet been identified.

Comments on Effects to Resources:
Impacts to known historic sites should be avoided. A CRAS will determine the significance of the known as well as the yet to be identified historic properties. Of all the alternatives, Alternative 4 may have the most impacts to historic resources. This will need to be verified with the CRAS.

Coordinator Feedback: None

2 ETAT Review by Steve Terry, Miccosukee Tribe of Indians of Florida (01/19/2010)

Historic and Archaeological Sites Effect: Minimal

Coordination Document: No Selection

Identified Resources and Level of Importance:
There are no recorded archaeological sites reported near this project. However, a Cultural Resources Survey will need to be done to ascertain if there are any archaeological sites within the project boundaries.

Comments on Effects to Resources:
Once a Cultural Resources Survey has been done, then effects, if any, to archaeological sites can be ascertained.

Additional Comments (optional):
If the Cultural Resources Survey shows there are no archaeological sites that will be impacted by this project, then no further consultation is necessary. However, if the Cultural Resources Survey does show that archaeological sites will be impacted by this project, then further consultation with the Miccosukee Tribe should be done.

Coordinator Feedback: None

3 ETAT Review by Alyssa McManus, FL Department of State (01/25/2010)
Historic and Archaeological Sites Effect: Moderate

Confidential: Review will not be displayed on Public Access website

Coordination Document: No Selection

Identified Resources and Level of Importance:
There are few identified resources located within the Alternative 1 project corridor. There is one National Register- listed site, which is Florida State Road No. 1, 8SR1313, located within the 100 ft boundary of this project corridor. This is also the only resource group identified within this buffer.

In 1929, Florida State Road 1 became part of the federal highway system and officially became US 90. It was listed in the NRHP in 2002. Careful consideration should be taken to determine if this project will adversely affect this resource.

Comments on Effects to Resources:
The lack of identified cultural resources most probably reflects the lack of any formal CRAS for this project corridor. Also, it is unknown what impact this project will have on State Road 1. For this reason, we are recommending that a CRAS be performed to identify and evaluate any cultural resources that might be affected by this project.

Coordinator Feedback: None

- No review submitted from the Seminole Tribe of Florida

Recreation Areas

Coordinator Summary

3 Summary Degree of Effect

Recreation Areas Summary Degree of Effect: Moderate

Reviewed By:
FDOT District 3 (4/21/2010)
Comments:
The Florida Department of Transportation (FDOT) has reviewed the comments submitted by the Florida Department of Environmental Protection (FDEP) and the US Enviromental Protection Agency (EPA), and recommends a Degree of Effect of Moderate.

The FDOT is aware Alternate 1 will need to cross the Blackwater Heritage State Trail. As such, coordination and mitigation as necessary will be pursued with OGT, the Board of Trustees of the Internal Improvement Trust Fund or any other Governing Board.

No Comments were received from the Federal Highway Administration (FHWA) or the National Park Service.

ETAT Reviews for Recreation Areas

3 ETAT Review by Madolyn Dominy, US Environmental Protection Agency (01/28/2010)

Recreation Areas Effect: Moderate

Coordination Document: No Selection

Identified Resources and Level of Importance:
Resources: Recreation Areas - recreational trails, conservation lands, wildlife management areas, Florida Forever BOT Projects, Florida Managed Areas, Greenways and Trails, Public Parks, etc.

Level of Importance: These recreational areas are of a high level of importance in the State of Florida. A moderate degree of effect is being assigned to this issue for the proposed project Alternative 1 (ETDM #12597, SR 87 Connector).

Comments on Effects to Resources:
The alignment for Alternative 1 is within close proximity to the Blackwater Heritage State Trail. The Blackwater Heritage State Trail is part of Florida's System of Greenways and Trails and is managed by the Florida Park Service. It is the State's westernmost rail trail and runs from Milton to Whiting Field Naval Air Station. The trail could be directly and indirectly impacted by the roadway project.

EPA is assigning a moderate degree of effect to this issue due to the fact that the roadway could impact this recreation area. Also, resulting development in the corridor would have significant indirect and cumulative impacts on these types of resources. FDOT should evaluate direct, indirect, and cumulative impacts to recreation areas features such as the one listed and any other public or private parks within the vicinity. The PD&E study should include a survey of the area to identify if any recreation areas which would require a Section 4(f) review are present in the project area. Opportunities to avoid and or minimize impacts and fragmentation to recreational resources should be evaluated and considered to the greatest extent practicable.

Coordinator Feedback: None

3 ETAT Review by Lauren P. Milligan, FL Department of Environmental Protection (01/29/2010)

Recreation Areas Effect: Moderate

Coordination Document: To Be Determined: Further Coordination Required

Identified Resources and Level of Importance:
Alternative 1 crosses the Blackwater Heritage State Trail.

Comments on Effects to Resources:
These lands contain significant natural communities and numerous element occurrences of listed species, as indicated by the Florida Natural Areas Inventory. The Department is interested in preserving the area's natural communities, wildlife corridor functions, natural flood control, stormwater runoff filtering capabilities, aquifer recharge potential, and recreational trail opportunities. Therefore, future environmental documentation should include an evaluation of the primary, secondary, and cumulative impacts of roadway construction on the above public lands and proposed acquisition sites.

Additional Comments (optional):
Under Article X, Section 18 of the Florida Constitution (as amended in 1998), dispositions of state-owned conservation lands are restricted to those lands "no longer needed for conservation purposes." If the proposed highway connector construction activities necessitate right-of-way creation within these state and water management district lands, the applicant will need to request that the Board of Trustees of the Internal Improvement Trust Fund or Northwest Florida Water Management District Governing Board determine whether the subject properties are no longer needed for conservation purposes. This requirement must be met before the conveyance of these lands can proceed. In addition, please be advised that proposals to utilize state conservation lands may be required to meet the guidelines of the state's linear facility policy, POLICY Use of Natural Resource Lands by Linear Facilities As Approved By Board of Trustees of the Internal Improvement Trust Fund on January 23, 1996.

Coordinator Feedback: None

- No review submitted from the Federal Highway Administration
- No review submitted from the National Park Service

Section 4(f) Potential

Coordinator Summary

3 Summary Degree of Effect

Section 4(f) Potential Summary Degree of Effect: Moderate

Reviewed By:
FDOT District 3 (4/21/2010)
Comments:
The Florida Department of Transportation (FDOT) has reviewed the comments from the Federal Highway Administration (FHWA) and recommends a Degree of Effect of Moderate.

As outlined in the FHWA comments, the SR 1 Red Brick Road (Trail) historic site, and the Blackwater River Heritage Trail will be crossed with this corridor. As such, in conjunction with the CRAS that will be prepared for this Study a determination of applicability will be needed to determine if the facilities are Section 4(f)resources.

ETAT Reviews for Section 4(f) Potential

3 ETAT Review by Cathy Kendall, Federal Highway Administration (04/08/2010)

Section 4(f) Potential Effect: Moderate

Coordination Document:PD&E Support Document As Per PD&E Manual

Identified Resources and Level of Importance:
Alternatives 3-6 have potential impacts to recreational lands or lands used as a wildlife refuge, that may be protected under Section 4(f).

All alternatives have potential to affect historic resources that may be protected under Section 4(f). The extent of these potential historic resources for each alternative are described below (as previously stated in comments for historic resources). Alternatives 4-6, however, appear to have greater potential to impact historic resources, which may be protected under Section 4(f)

Alternatives 1, 2 and 3 may have fewer impacts for historic resources than alternatives 4-6. Alternatives 1-3 have a potentially historic structure located within 500 feet of the proposed road improvement. Alternatives 4-6 have a potentially historic structure within 200 feet of the proposed improvement. Alternatives 4-6 also have a potentially significant archaeological site (lumber mill) located within 100 feet. Alternatives 4-6 also have a potentially historic bridge located within 500 feet.

All alternatives potentially impact SR 1, an NRHP resource known as Red Brick Road.

Alternative 4 goes through a portion of the town of Milton, and would potentially impact historic structures that have not yet been identified.

Comments on Effects to Resources:
Impacts to known parks, recreation and wildlife refuge areas and historic sites protected under Section 4(f) should be avoided. A CRAS will determine the significance of the known as well as the yet to be identified historic properties. Of all the alternatives, Alternative 4 may have the most impacts to historic resources. This will need to be verified with the CRAS. A determination of applicability will be needed to determine if each park, recreation area or wildlife refuge area is, in fact, a Section 4(f) resource.

Coordinator Feedback: None

N/A ETAT Review by Anita Barnett, National Park Service (01/15/2010)

Section 4(f) Potential Effect: N/A / No Involvement

Coordination Document: No Involvement

Identified Resources and Level of Importance:
None found.

Comments on Effects to Resources:
None found.

Coordinator Feedback: None

ETAT Reviews: Community

Aesthetics

Coordinator Summary

2 Summary Degree of Effect

Aesthetics Summary Degree of Effect: Minimal

Reviewed By:
FDOT District 3 (4/21/2010)
Comments:
The Florida Department of Transportation (FDOT) recommends a Degree of Effect of Minimal for aesthetics.

The majority of land within the project area is agriculture with a few residential homes dispursed in the area. The proposed roadway improvements should not significantly alter any viewsheds or vistas, but may contribute to changing the rural character of the area. However, the Blackwater River is an established aesthetic feature in the project area. The proposed river crossing is to co-locate with a major power transmission line that crosses the river. Therefore, the Alternative crosses the river in an area that already has a significant disruption to the view sheds.

During the Project Development and Environment (PD&E) Study, a noise evaluation will be conducted. In addition, input from the public will be solicited on potential project effects on community aesthetics. The FDOT will consider incorporating aesthetic enhancements such as landscaping, into project design plans. Coordination with the community will occur throughout the PD&E Study.

No comments were received from the Federal Highway Administration (FHWA), the Florida-Alabama Transportation Planning Organization (TPO).

ETAT Reviews for Aesthetics

No reviews found for the Aesthetics Issue.
- No review submitted from the Federal Highway Administration

Economic

Coordinator Summary

1 Summary Degree of Effect

Economic Summary Degree of Effect: Enhanced

Reviewed By:
FDOT District 3 (4/20/2010)
Comments:
The Florida Department of Transportation (FDOT) recommends a Degree of Effect of Enhanced for economic.

Access to intermodal facilities and movement of goods and freight are also important considerations in the development of an effective transportation system. This is an enhancement provided with this Alternative by providing a link from northern areas of the County to areas in the southern end of the County. In addition it would establish the needed SIS link between Whiting Field and I-10 and the SR 87S SIS facility. The Santa Rosa County Aviation Industrial Park will also be provided improved access to the SIS facilities to the south.

The bicycle and pedestrian enhancements and improvements proposed along the new facility would increase safety, pedestrian mobility, connectivity between residential and nonresidential areas, and would provide access for transportation disadvantaged populations. As a result of the proposed improvements, property values for commercial uses within the County that benefit from this Alternative are likely to increase along with the County's tax base.

The FDOT will conduct public outreach to residents and businesses in the area to solicit input on the project, particularly concerning access. The FDOT will also develop and maintain channels of communication between the proposed subdivision developers, the City of Milton and Santa Rosa County officials, and the NASWF concerning the proposed project, including notifying them of upcoming public meetings.

No comments were received from the Federal Highway Administration (FHWA), and the Florida-Alabama Transportation Planning Organization (TPO).

ETAT Reviews for Economic

No reviews found for the Economic Issue.
- No review submitted from the FL Department of Economic Opportunity
- No review submitted from the Federal Highway Administration

Land Use

Coordinator Summary

2 Summary Degree of Effect

Land Use Summary Degree of Effect: Minimal

Reviewed By:
FDOT District 3 (4/21/2010)
Comments:
The Florida Department of Transportation has reviewed the comments submitted by the Florida Department of Community Affairs (DCA), and the Naval Air Station Whiting Field (NASWF), and recommends a Degree of Effect of Minimal.

Through consultation with Santa Rosa County Land Use staff, it was confirmed that the County's Map 4-3 "Needs Not Cost Feasible with Existing Resources," modified November 2008, the project is identified and it was on the previous Map 4-4 "Not Cost Feasible with Existing Revenue Sources," dated April 2002. Only one general alignment was shown which is similar to the general alignment in the TPO's Long Range Transportation Plan. The map does not, however, show the alternative alignments because they are determined through the corridor analysis and PD&E study. One will be selected as the preferred alignment,

and it will go into the Comprehensive Plan. It will remain on the "Not Cost Feasible" map until we can show construction is cost feasible.

In addition, funding for this project is on Table 10-1 of the Schedule of Capital Improvements, page 10-13 of the Comprehensive Plan. It was $490,000 in FY 09, a federal earmark. The description is not more specific because we generally use the language of the earmark itself; however, we can be more specific in the future. This PD&E study is actually funded by three earmarks with the $490,000 as the second earmark. The first was originally appropriated in FY 07, so it is not shown in the Schedule of Capital Improvements, since it was outside the five-year window of the schedule: FY 08 - FY 12. The third was $475,000 appropriated for FY 10, which should be added to the Comprehensive Plan. No funding has been identified for the further phases of final design, right-of-way, or construction. But, this is typical of most projects. It is very rare that a project is funded through all phases at one time. The funding that we knew of at the time is in the Schedule of Capital Improvements. All earmark funds have been in the TIP and STIP.

The County also believes that if an alternative is not found to the existing roadways, sprawl will extend even further beyond the study area, congestion will worsen on US 90/SR 87 and job growth in particular in the East Milton industrial area will halt. The County's Comprehensive Plan also provides guidance on development around the military base, but application of the land development code (LDC) further defines, for instance, protections for military airport zones (MAZs). In the LDC, some types of development are compatible with air operations, such as industrial development. The County is building an aviation industrial park adjacent to NAS Whiting Field, made possible by an agreement with the Navy.

Santa Rosa County is nationally known for its cooperation with the Navy to achieve goals of both the County and the military. So, at the very general level of the Comprehensive Plan, a project may appear to be inconsistent, but in fact stronger protections exist such as in the LDC.

The project is also in the Florida - Alabama Transportation Planning Organization (TPO)'s 2025 Long Range Transportation Plan Cost Feasible Plan, adopted in Dec 2005.

The Federal Highway Administration (FHWA) did not provide comments.

ETAT Reviews for Land Use

3 ETAT Review by Gary Donaldson, FL Department of Community Affairs (03/02/2010)

Land Use Effect: Moderate

Coordination Document: No Selection

Identified Resources and Level of Importance:
Consistency review for proposed State Road 87 Connector project

Reviewed for consistency with the Santa Rosa County Comprehensive Plan and the City of Milton Comprehensive Plan

The State Road 87 Connector ETDM project is a proposed new roadway in Santa Rosa County which consists of six alignment alternatives associated with this review. The project is intended to provide an alternative to the existing shared facility of State Road 87 and US 90 which currently operates at a failing level of service. The indicated need for a new corridor is to provide additional capacity and improve regional connectivity.

Alternatives 1, 2 and 3 identify alternative connections to State Road 87 and US 90, which are located northeast of the City of Milton. Alternatives 2 and 3 traverse areas adjacent to Florida Forever lands. Alternatives 4, 5 and 6 connect State Road 87 to US 90 south of the City of Milton crossing the Blackwater River. The alternatives south of Milton are intended to route traffic around

the City of Milton Historic District.

A portion of State Road 87 is identified in the Santa Rosa Comprehensive Plan 2008-2025 Comprehensive Plan Capital Improvements Element as a Federal earmark multi-laning project. However, the Element does not reference project boundaries associated with this specific improvement. The ETDM Project Description does not identify a funding source for this project.

None of the project alternatives are identified on Map 4-3 of the Santa Rosa County 2020 Future Transportation Map and none are identified on Map A of the City of Milton Future Transportation Map.

The State Road 87 Connector project (including its alternatives) is not consistent with the comprehensive plans of Santa Rosa County or the City of Milton for the following reasons:

(1) It is not specifically identified in the Santa Rosa County or the City of Milton Comprehensive Plans.
(2) It is not identified on the Future Transportation Maps of Santa Rosa County or the City of Milton.
(3) It is not specifically identified in the Five-Year Capital Improvement Schedule of Santa Rosa County and the City of Milton.
(4) It is inconsistent with Policy 8.1.D.6 of the Conservation Element of the Santa Rosa County Comprehensive Plan, which states that new public infrastructure should not be planned where development may be promoted in environmentally sensitive lands.
(5) It is inconsistent with Objective 3.3A of the Future Land Use Element of the Santa Rosa County Comprehensive Plan, which requires that future development within adopted Military Airport Zones (MAZs) not negatively impact current and long term viable use of airfields by limiting incompatible land uses.

The project should be modified to be consistent with the policies identified above and the local government comprehensive plans should be revised to include this project before it advances into the FDOT Five Year Work program.

Staff review of the project addressed the following concerns:

Land use --
Alternatives 1, 2, and 3 of the State Road 87 Connector project are located to the northeast of the City of Milton and connect through land designated as "Agriculture (AG)" on Map 3-1 of the Santa Rosa County Future Land Use Map. Construction of a roadway along these corridors has the potential to promote urban sprawl, based on the definitions in Rules 9J-5.003(134) and 9J-5.006(5), F.A.C.
(134) "Urban sprawl" means urban development or uses which are located in predominantly rural areas, or rural areas interspersed with generally low-intensity or low-density urban uses, and which are characterized by one or more of the following conditions: (a) The premature or poorly planned conversion of rural land to other uses; (b) The creation of areas of urban development or uses which are not functionally related to land uses which predominate the adjacent area; or (c) The creation of areas of urban development or uses which fail to maximize the use of existing public facilities or the use of areas within which public services are currently provided. Urban sprawl is typically manifested in one or more of the following land use or development patterns: Leapfrog or scattered development; ribbon or strip commercial or other development; or large expanses of predominantly low-intensity, low-density, or single-use development.

The information provided in the ETDM Project Description is insufficient to determine the impacts of the project on urban sprawl or greenhouse gas emmissions. The project has been discussed with Santa Rosa County planning staff who indicated that the selected alignment alternative is intended to be constructed as a limited access roadway. If so, contribution to urban sprawl and greenhouse gas emissions may be mitigated, depending on usage and access characteristics.

Objective 3.1.A of the Santa Rosa County Comprehensive Plan Future Land Use Element requires future land uses to be coordinated in order to ensure the protection of natural resources and with the availability of adequate infrastructure, the reduction of greenhouse gas emmissions. Alternatives 1,2, and 3 connect through agricultural, single family residential, industrial and conservation/recreation land uses. While Alternatives 4, 5 and 6 maximize the use of existing roadway infrastructure as identified in the ETDM Project Description, Alternatives 1,2 and 3 as described may not protect natural resources and reduce greenhouse gas emissions.

The portions of alternatives traversing through the City of Milton connect through commercial uses as identified on the City Future Land Use Map. The City of Milton Comprehensive Plan does not contain policies within its plan that address the reduction of greenhouse gas emmissions.

Transportation --
The ETDM Purpose and Need Statement identifies State Road 87 as a vital evacuation route for Gulf Breeze and Navarre residents to travel northbound. State Road 87 is also identified as a hurricane evacuation route on Map 4-2 Santa Rosa Future Transportation Map 2025. However, the current route connects using a congested portion of US 90 through the City of Milton downtown section.

The project is identified in the MPO 2020 Cost Feasible Plan as a Project Development and Environment Study (PD& E) consisting of preliminary design phases. The roadway corridor selected will be a two-lane facility with right-of way acquired for a four lane facility. No funding sources have currently been identified for the project. Further, the anticipated residential and business growth of Santa Rosa County emphasizes the need for an improved roadway network which will better facilitate traffic along the existing corridor.

Conservation -
Policy 8.1.D.6 of the Santa Rosa County Comprehensive Plan Conservation Element requires that new public infrastructure be compatible with future and existing land uses and should not promote increased development located in environmentally sensitive lands. The proposed roadway alternatives located to the north and east of the City of Milton (Alternatives 1, 2 and 3) are located in agriculturally designated areas on the Santa Rosa County Future Land Use Map. Portions of the roadway alternatives are also located close to the Clear Creek/Whiting Field Florida Forever Project Boundary. Construction of a new roadway through and around areas designated for conservation has the potential to jeopardize environmental resources located in and around the Florida Forever project Boundary and surrounding agricultural areas. The project is therefore inconsistent with Santa Rosa Comprehensive Plan Policy 8.1.D.6.

Military Facility-
Objective 3.3.A of the Santa Rosa County Comprehensive Plan Future Land Use Element requires that future development within adopted Military Airport Zones (MAZs) and Public Airport Zones (PAZs) not negatively impact current and long term viable use of the airfield by limiting incompatible land uses. Portions of the proposed location of roadway Alternatives 1, 2 and 3 are located within, or near the Airport Zones identified on Map 3-18 of the Future Land Use Map Series (NAS Whiting Field Military Airport Zone (MAZ) Map) contained within the Santa Rosa County Comprehensive Plan. The map identifies Accident Potential Zones within the MAZ boundaries. Accident Potential Zones refer to areas with a greater potential for accidents to occur around airport facilities.

Alternatives 2 and 3 of this project are inconsistent with Objective 3.3.A of the Santa Rosa County Comprehensive Plan and Map 3-18 of the Santa Rosa County Future Land Use Map Series (NAS Whiting Field Military Facility) because of safety concerns involving the potentially adverse impacts of new roadway construction and vehicle traffic passing through Airport Zone boundaries around the existing military facility. Alternative 1 is located near the Airport Zone, but is located outside of the

Airport Zone boundary.

Comments on Effects to Resources:
see above

Coordinator Feedback: None

2 ETAT Review by Randy Roy, Naval Air Station Whiting Field (02/14/2010)
Land Use Effect: Minimal

Coordination Document: To Be Determined: Further Coordination Required

Identified Resources and Level of Importance:
Alternative 1 will have minimal to moderate effects on Naval Air Station Whiting Field's (NASWF) mission.

Comments on Effects to Resources:
Possible increase in development immediately adjacent NASWF. Though existing zoning regulations and an approved Joint Land Use Study are in place to protect the installation from incompatible development, it is important to highlight potential consequences with development trends adjacent project area. Detailed maps and land development code can be reference and included in the assessment (references are located on the Santa Rosa County Planning and Zoning website.

NASWF has two multi-year agreements to acquire conservation lands and properties adjacent the installation. The goal is to partner with county and state to conserve environmentally sensitive lands and buffer the installation's mission from incompatible development. Encourage study incorporate language/maps identifying these targeted areas of concern and their potential impacts on the planning/alternative selection. The specifics in regards to these on-going conservation efforts are listed in the Florida Forever project list (Clear Creek I, Clear Creek II, and a potential add-on project called Wolfe Creek Forest). Santa Rosa County and NAS Whiting Field have also partnered in developing an Area of Concern Map (available via the SRC Planning and Zoning website).

Coordinator Feedback: None

- No review submitted from the FL Department of Economic Opportunity
- No review submitted from the Federal Highway Administration

Mobility

Coordinator Summary

1 Summary Degree of Effect
Mobility Summary Degree of Effect: Enhanced

Reviewed By:
FDOT District 3 (4/21/2010)

Comments:
The FDOT agrees with the Florida Department of Environmental Protection and recommends a Degree of Effect of Enhanced.

This project will not only improve mobility for motoring traffic, but it will also enhance bicycle and pedestrian travel by providing an improved and expanded network.

The Federal Highway Administration (FHWA) and the Federal Transit Administration did not provide comments.

ETAT Reviews for Mobility

1 ETAT Review by Lauren P. Milligan, FL Department of Environmental Protection (01/29/2010)
Mobility Effect: Enhanced

Coordination Document: To Be Determined: Further Coordination Required

Identified Resources and Level of Importance:
The project provides connectivity between several "High" Multi-Use Trail Priority Corridors: the Blackwater Heritage Trail, the Highway 191 (Munson Highway) Corridor and the Whiting Bike Trail Corridor. Alternative 1 crosses the Blackwater Heritage Trail; Alternative 3 is in close proximity to the Naval Air Station at Whiting Field, the Coldwater Creek Florida Forever Project and the proposed Blackwater Heritage State Trail Extension; and multiple alternatives cross the Florida National Scenic Trail. Steps should be taken to ensure the protection and enhancement of the existing trails. Inclusion of a multi-use trail facility within the entire project area could enhance connectivity between the various existing and future trail systems, alleviate traffic and enhance mobility while enhancing alternate forms of transportation. Location of the road alignment could, however, make access difficult for trail users. Future adjacent development could affect the trail by generating increased vehicular traffic. Enhancements to alternate transportation and trail safety would occur if a grade separated crossing (for the trail) is included with the roadway design. Coordination is recommended to ensure that impacts to the trail are given due consideration and that they can benefit the multiple uses of the trail.

Comments on Effects to Resources:
Since 1995, the Florida Department of Environmental Protection's Office of Greenways & Trails (OGT) has been working with the University of Florida to identify the best opportunities to protect ecological connectivity statewide. To that end, the Florida Ecological Greenways Network (Network) was developed through a decision support model and collaborative process involving technical input from the Florida Greenways Commission, the Florida Greenways Coordinating Council, state, regional and federal agencies, scientists, conservation groups, planners and the general public. Since its legislative adoption in 1999, the Network has been prioritized to rank all areas into classes based upon value for ecological connectivity. The Ecological Linkages represent areas that are most important to protect because of their ability to connect existing ecological hubs and because of the potential threats of development.

The proposed project is in an area that has been identified as a Critical Ecological Linkage within Florida. Because of the long range potential for this area to serve as an ecological connector for protection of wildlife, OGT staff suggests that appropriate steps be considered as part of the project. Underpasses or other steps may be appropriate in order to maintain or establish habitat connectivity and a safe path for wildlife.

For further information and assistance, please contact Ms. Robin Turner at (850) 245-2909.

Coordinator Feedback: None

- No review submitted from the Federal Highway Administration
- No review submitted from the Federal Transit Administration

Relocation

Coordinator Summary

2 Summary Degree of Effect

Relocation Summary Degree of Effect: Minimal

Reviewed By:
FDOT District 3 (4/21/2010)
Comments:
The Florida Department of Transportation (FDOT) recommends a Degree of Effect of Minimal for relocation.

Additional ROW will be required to accommodate the improvements and associated ponds. There are a few residences within the 200-foot buffer distance that may be effected as the Alternative appoaches SR 87N.

Potential residential, business, and public facility relocations will be analyzed in detail throughout the Project Development and Environment (PD&E) Study. Depending on the project alignment and alternative selected, there is a potential for displacement of residences. Relocation efforts will be further analyzed as more detailed project information and ROW needs become available. Relocations should be minimized and any identified historic residences located along the project should be avoided where reasonable and feasible. Any potential relocation should be evaluated to ensure that there are no disproportionate adverse impacts to any distinct minority, ethnic, elderly, or handicapped groups and/or low-income households.

This project will be developed in accordance with the Civil Rights Act of 1964, as amended by the Civil Rights Act of 1968. Along with Title VI of the Civil Rights Act, Executive Order 12898 (Environmental Justice) which ensures that minority and/or low-income households are neither disproportionably adversely impacted by major transportation projects, nor denied reasonable access to them by excessive costs or physical barriers (Environmental Protection Agency [EPA], 1994).

No comments were received from the Federal Highway Administration (FHWA), or the Florida-Alabama Transportation Planning Organization (TPO).

ETAT Reviews for Relocation

No reviews found for the Relocation Issue.
- No review submitted from the Federal Highway Administration

Social

Coordinator Summary

3 Summary Degree of Effect

Social Summary Degree of Effect: Moderate

Reviewed By:

FDOT District 3 (4/21/2010)
Comments:
The Florida Department of Transportation (FDOT) has reviewed the comments made by the US Environmental Protection Agency (EPA) and recommends a Degree of Effect of Moderate. The FL Department of Community Affairs had no comments.

The DOT agrees with EPA's assessment that there will be social benefits from this project. However, the FDOT understands there may be issues associated with the effects caused from a new roadway facility. To address those issues, the project team will be utilizing an on-going public involvement program throughout the PD&E Study.

The Federal Highway Administration (FHWA) did not comment.

ETAT Reviews for Social

3 ETAT Review by Madolyn Dominy, US Environmental Protection Agency (02/01/2010)
Social Effect: Moderate

Coordination Document: No Selection

Identified Resources and Level of Importance:
Resources: Social impacts to features such as residential populations, residential communities, commercial businesses, social service facilities, minority or low-income populations, disadvantaged populations, archeological and historic areas or structures, etc.

Level of Importance: These resources are of a high level of importance. Impacts to these types of resources, both positive and negative, should be evaluated and documented in the PD&E phase of the project. A moderate degree of effect is being assigned to this issue for the SR 87 Alternatives.

Comments on Effects to Resources:
According to the project description, the primary need for this new corridor is to provide additional capacity, and to improve regional connectivity by providing a more direct route from areas of high growth in northern Santa Rosa County, such as the Berryhill Road area, to I-10 and to areas further to the south. Likewise, access will be improved to and from I-10 for the Whiting Field U.S. Naval Air Station, and the County's Joint Use Planning Area near Whiting Field. It is also anticipated that this new facility would provide relief to Ward Basin Road and its intersection with US 90. It is also intended to provide much needed relief to the US 90 Blackwater Bridge.

Santa Rosa County has been experiencing considerable growth over the past year, and has grown in its own right, but also as a bedroom community to the greater Pensacola area. This growth has spurred the need for an improved roadway network. In addition, there are several major traffic generators within the US 90 corridor area, such as new residential developments, the Santa Rosa Criminal Justice Center, the Santa Rosa Corrections Facility, Whiting Field U.S. Naval Air Station, Team Rosa Joint Planning area near Whiting Field, and the Santa Rosa Commerce Park, which would all benefit from the capacity this facility will provide. The need for the project is also related to committed trips associated with future development in the northern portions of Santa Rosa County, as well as, the future development along the US 90 corridor, which is hindered by the existing capacity limits of US 90. Santa Rosa County has grown 173% since 1980 and is expected to grow another 92% by 2030. This increase will put further demand on the US 90/SR 87 segment, making growth and evacuation difficult due to a lack of capacity.

EPA is assigning a moderate degree of effect to this issue. There will be social benefits resulting from the project due to congestion relief and an improvement in mobility with the new SR 87 Connector project. However, there are several social issues to be considered. The project should

take into account various social issues and impacts for each of the Alternatives. These issues may include, but are not limited to, population and growth estimates, community cohesion, noise, vibration, visual aesthetics, environmental justice issues, low income populations, elderly populations, economic development, land acquisition, displacements or relocations, effects on special populations, archeological and historic areas or structures, and other social features that may be affected by the project.

These issues should be evaluated and addressed during the PD&E phase of the project. EPA recommends that any negative direct and indirect impacts to social resources and affected communities be avoided or minimized to the best extent practicable. Public involvement on this project should be ongoing and continual throughout the project.

EPA recommends that a Sociocultural Effects (SCE) Evaluation be considered as detailed in the FDOT document entitled Sociocultural Effects in ETDM. This document outlines the importance of evaluating sociocultural effects throughout the transportation planning and development process. An SCE Evaluation is used to assess community impacts utilizing both quantitative and qualitative methods. The SCE Evaluation should be based on the best available data and provide for adequate public involvement and outreach activities.

Some of the issues to be considered when conducting an SCE Evaluation include: social consequences to surrounding or interconnected communities; demographics of affected community; displacement of population; increase/decrease of population as a result of the project; displacement of minority populations; and disproportionate effects on special populations. The particular types of social issues that are important for this proposed project should be evaluated.

Coordinator Feedback: None

0 ETAT Review by Gary Donaldson, FL Department of Community Affairs (03/02/2010)

Social Effect: None

Coordination Document: No Selection

Identified Resources and Level of Importance:
Social impacts cannot be determined for the project at this time.

Comments on Effects to Resources:
None found.

Coordinator Feedback: None

- No review submitted from the Federal Highway Administration

ETAT Reviews: Secondary and Cumulative

Secondary and Cumulative Effects

Coordinator Summary

4 Summary Degree of Effect

Secondary and Cumulative Effects Summary Degree of Effect: Substantial

Reviewed By:
FDOT District 3 (4/21/2010)
Comments:
The Florida Department of Transportation (FDOT) has evaluated comments from the US Fish and Wildlife Service (USFWS), and the Northwest Florida Water Management District (NWFWMD) and recommends a Degree of Effect of Substantial.

The FDOT, in conjunction with the Federal Highway Administration (FHWA), will be facilitating a task force to evaluate and provide guidance on Indirect (Secondary) and Cumulative Effects. This task force consists of representatives from the FHWA, the FDOT, various agencies and regional planning councils. The output of this task force will be guidance in the form of a White Paper along with possible revisions to the Environmental Screening Tool (EST) to facilitate Indirect and Cumulative Effects Analysis. A Cumulative Effects Evaluation will also be conducted as part of the Project Development and Environment (PD&E) Study.

ETAT Reviews for Secondary and Cumulative Effects

4 ETAT Review by Leigh Brooks, Northwest Florida Water Management District (01/29/2010)

Secondary and Cumulative Effects Effect: Substantial

Coordination Document: To Be Determined: Further Coordination Required

At-Risk Resource: Water Quality and Quantity

Comments on Effects:
Existence of the new roadway could lead to development of undeveloped proximate areas, particularly approaching SR 87 North. Conversion of the natural landscape that reduces vegetation, exposes bare soil, and alters surface hydrology would degrade water quality.

Incremental and interactive effects on wetland and floodplain resources, water quality, and associated sensitive terrestrial and aquatic habitats can be expected. These changes may reduce the quality of remaining resources and cause further wetland impacts, fragmentation, hydrologic alteration, and associated impacts to water quality and habitats. Impacts from development associated with this corridor present less of a concern because there are suitable upland areas for development, however development will increase impervious surface and could increase stormwater runoff, diminishing water quality.

Recommended Avoidance, Minimization, and Mitigation Measures:
Minimizing the total project footprint, especially in sensitive areas, combined with strict stormwater controls will help minimize impacts to water quality. Impacts to wetlands and surface hydrology could be minimized this way as well, and more so by raising the roadway over wetlands and flood

hazard areas in the form of a viaduct or extended elevated bridge, allowing for free movement of plants, animals and water and maintaining the natural water quality benefits provided by these lands.

Recommended Actions to Improve At-Risk Resources:
- Plan stormwater treatment and management to provide for protection of both flows and water quality, and identify and implement opportunities for retrofit.
- Carefully examine and resolve any existing issues with drainage related impacts.
- Develop a detailed plan of best management practices encompassing both construction and facility design. These should be designed to protect against nonpoint source pollution (both long-term and during construction), prevent offsite wetland and water quality impacts, and maintain hydrologic connectivity.
- Protect wetland systems and functions, including isolated wetlands.
- Conduct early consultation with the District to develop wetland mitigation alternatives.
- Plan stream and bank protection measures so as to protect and/or restore riparian habitat the full width of the natural floodplain.
- Incorporate extended bridging in areas important to hydrologic and habitat connectivity.
- Minimize the total footprint of the project.
- Minimize the effective impervious area.
- Conduct advance planning with local governments and state agencies to prevent adverse cumulative impacts associated with anticipated and spin-off development.

At-Risk Resource: Wetlands

Comments on Effects:
The overall and long-term cumulative effects of the proposed roadway include direct project impacts and related development along with incremental and interactive effects from anticipated and spin off development to wetland and floodplain resources, water quality, and associated sensitive terrestrial and aquatic habitats. These changes will reduce the quality of remaining resources and cause further wetland impacts, fragmentation, hydrologic alteration, and associated impacts to water quality and habitats.

Impacts from development associated with this corridor present less of a concern because there are suitable upland areas for development.

Recommended Avoidance, Minimization, and Mitigation Measures:

Early interagency planning and coordination of wetland mitigation alternatives are required in accordance with Section 373.4137, Florida Statutes.

Work with local government to discourage development activities adjacent to environmentally sensitive water resources. Determine the future land uses for currently undeveloped regions and design roadway infrastructure and mitigation measures to accommodate associated development activities.

Minimize the project footprint; use extended bridges in areas important to hydrologic and habitat connectivity.

Recommended Actions to Improve At-Risk Resources:
- Follow the process for mitigation of wetland impacts required under s. 373.4137, F.S. Initiate coordination with the District as soon as possible.
- Develop a detailed plan of best management practices encompassing both construction and facility design. These should be designed to maintain hydrologic connectivity and to prevent nonpoint source pollution (both long-term and during construction), offsite wetland and water quality impacts, and habitat fragmentation.
- Protect wetland systems and functions, including isolated wetlands.
- Carefully examine and resolve any existing issues with drainage related impacts.
- Plan stream and bank protection measures so as to protect and/or restore riparian habitat the full width of the natural floodplain.
- Incorporate extended bridging in areas important to hydrologic and habitat connectivity.
- Minimize the project footprint.
- Minimize the effective impervious area.
- Conduct advance planning with local governments and state agencies to prevent adverse cumulative impacts associated with anticipated and spin-off development.

Coordinator Feedback: None

4 ETAT Review by Mary Mittiga, US Fish and Wildlife Service (01/22/2010)
Secondary and Cumulative Effects Effect: Substantial

Coordination Document: To Be Determined: Further Coordination Required

At-Risk Resource: Wildlife and Habitat

Comments on Effects:

The secondary effects of a new road alignment will extend outward from the roadway for variable distances, depending on the nature of the effect. Examples of secondary effects to wildlife and habitat include: transport of particulate and chemical materials, such as sediment, mineral nutrients, and heavy metals; micro-climate changes; roadkill; roadside maintenance activities; traffic noise; traffic vibration; the attraction effect of light; hydrological alterations; habitat fragmentation; disruption of wildlife movement corridors; increased human access; new development with habitat loss, and the spread of invasive, non-native plant species. A new roadway will provide access for development into adjoining natural lands which provide habitat for numerous wildlife species. Corridors 2 and 3 may result in additional development near to Naval Air Station Whiting Field, impacting land manager's ability to implement prescribed burning for habitat improvement. Due to recent rapid coastal development in Florida and throughout the U.S., the secondary and cumulative effects of new growth associated with the corridor should be evaluated.

Recommended Avoidance, Minimization, and Mitigation Measures:
The following measures are recommended to avoid and minimize secondary and cumulative impacts to wildlife and habitat:
Environmentally-sensitive bridge construction should be used.
Post-project monitoring should occur regularly to determine identify and control invasive, non-native species.
Water quality protection measures to Environmental Resource Permitting (ERP) standards or better should be in place within these high quality undeveloped watersheds.
Specific water quality protection Best Management Practices (BMPs) should be developed to avoid and minimize potential effects to designated critical habitat for the Gulf sturgeon and reticulated flatwoods salamander.

Recommended Actions to Improve At-Risk Resources:
None found.

At-Risk Resource: Wetlands

Comments on Effects:
The secondary effects of a new road alignment will extend outward from the roadway for variable distances, depending on the nature of the effect. Examples of secondary effects to wetlands include: transport of particulate and chemical materials, such as sediment, mineral nutrients, and heavy metals; micro-climate changes; roadside maintenance activities; hydrological alterations; increased human access; new development, and the spread of invasive, non-native plant species. A new roadway can provide access for development into adjoining natural/open lands, of which much are wetlands. Due to the recent rapid coastal development in Florida and throughout the U.S., the secondary and cumulative effects of new growth associated with the corridor should be evaluated.

Recommended Avoidance, Minimization, and Mitigation Measures:

Other measures to avoid and minimize impacts to wetlands include: post-project monitoring to identify and control invasive, non-native species; additional culverts to maintain hydrologic connections between wetlands; environmentally sensitive bridge construction; and water quality protection measures.

Recommended Actions to Improve At-Risk Resources:
None found.

Coordinator Feedback: None

Alternative #2

Alternative Description	
From	SR87S/US90
To	SR 87N/SR 89N
Type	New Alignment
Status	ETAT Review Complete
Total Length	7.2 mi.
Cost	
Modes	Roadway Bicycle Pedestrian

Location and Length			
	Segment S-001	**Segment S-003**	**Segment S-002**
Name			
Beginning Location			
Ending Location			
Length (mi.)	2.35	3.16	1.69
Roadway Id			
BMP	??	??	??
EMP	??	??	??
Jurisdiction and Class			
	Segment S-001	**Segment S-003**	**Segment S-002**
Jurisdiction			
Urban Service Area			
Functional Class			
Current and Future Conditions			
Base Conditions			
	Segment S-001	**Segment S-003**	**Segment S-002**
Year			
AADT	unspecified	unspecified	unspecified

Lanes			
Config			
Interim Plan			
	Segment S-001	**Segment S-003**	**Segment S-002**
Year			
AADT	unspecified	unspecified	unspecified
Lanes			
Config			
Needs Plan			
	Segment S-001	**Segment S-003**	**Segment S-002**
Year			
AADT	unspecified	unspecified	unspecified
Lanes			
Config			
Cost Feasible Plan			
	Segment S-001	**Segment S-003**	**Segment S-002**
Year			
AADT	unspecified	unspecified	unspecified
Lanes			
Config			
No funding sources found.			

Project Effects Overview

Issue	Degree of Effect	Organization	Date Reviewed
Natural			
Air Quality	2 Minimal	US Environmental Protection Agency	1/26/2010
Coastal and Marine	2 Minimal	National Marine Fisheries Service	1/15/2010
Contaminated Sites	2 Minimal	FL Department of Environmental Protection	1/29/2010
Contaminated Sites	2 Minimal	US Environmental Protection Agency	1/27/2010
Farmlands	2 Minimal	Natural Resources Conservation Service	1/08/2010
Floodplains	4 Substantial	Northwest Florida Water Management District	1/29/2010
Floodplains	3 Moderate	US Environmental Protection Agency	1/28/2010
Navigation	2 Minimal	US Coast Guard	12/18/2009
Navigation	2 Minimal	US Army Corps of Engineers	12/24/2009
Special Designations	3 Moderate	US Environmental Protection Agency	1/29/2010
Water Quality and Quantity	4 Substantial	US Environmental Protection Agency	1/31/2010
Water Quality and Quantity	3 Moderate	FL Department of Environmental Protection	1/29/2010
Water Quality and Quantity	4 Substantial	Northwest Florida Water Management District	1/29/2010

Wetlands	3	Moderate	US Environmental Protection Agency	1/29/2010
Wetlands	2	Minimal	National Marine Fisheries Service	1/15/2010
Wetlands	4	Substantial	FL Department of Environmental Protection	1/29/2010
Wetlands	3	Moderate	US Army Corps of Engineers	12/24/2009
Wetlands	4	Substantial	Northwest Florida Water Management District	1/29/2010
Wetlands	4	Substantial	US Fish and Wildlife Service	1/22/2010
Wildlife and Habitat	4	Substantial	FL Fish and Wildlife Conservation Commission	1/19/2010
Wildlife and Habitat	2	Minimal	Naval Air Station Whiting Field	2/14/2010
Wildlife and Habitat	4	Substantial	US Fish and Wildlife Service	1/22/2010
Cultural				
Historic and Archaeological Sites	2	Minimal	Miccosukee Tribe of Indians of Florida	1/19/2010
Historic and Archaeological Sites	3	Moderate	FL Department of State	1/25/2010
Historic and Archaeological Sites	3	Moderate	Federal Highway Administration	4/08/2010
Recreation Areas	3	Moderate	US Environmental Protection Agency	1/29/2010
Recreation Areas	4	Substantial	FL Department of Environmental Protection	1/29/2010
Section 4(f) Potential	3	Moderate	Federal Highway Administration	4/08/2010
Community				
Land Use	3	Moderate	FL Department of Community Affairs	3/02/2010
Land Use	2	Minimal	Naval Air Station Whiting Field	2/14/2010
Mobility	1	Enhanced	FL Department of Environmental Protection	1/29/2010
Social	0	None	FL Department of Community Affairs	3/02/2010
Social	3	Moderate	US Environmental Protection Agency	2/01/2010
Secondary and Cumulative				
Secondary and Cumulative Effects	4	Substantial	US Fish and Wildlife Service	1/22/2010
Secondary and Cumulative Effects	4	Substantial	Northwest Florida Water Management District	1/29/2010

ETAT Reviews: Natural

Air Quality

Coordinator Summary

2 Summary Degree of Effect

Air Quality Summary Degree of Effect: Minimal

Reviewed By:

FDOT District 3 (4/21/2010)
Comments:
The Florida Department of Transportation (FDOT) has evaluated comments from the US Environmental Protection Agency (USEPA) and recommends a Degree of Effect of Minimal.

The project is located in an area which is designated 'attainment' for all of the National Ambient Air Quality Standards under the criteria provided in the Clean Air Act.

An air quality analysis will be performed as part of the Project Development and Environment (PD&E) Study for this project.

The Federal Highway Administration (FHWA) did not provide comment.

ETAT Reviews for Air Quality

2 ETAT Review by Madolyn Dominy, US Environmental Protection Agency (01/26/2010)
Air Quality Effect: Minimal

Coordination Document: No Selection

Identified Resources and Level of Importance:
Resources: Air Quality

Level of Importance: Low, due to minimal degree of effect. A minimal degree of effect is being assigned to the air quality issue for the proposed roadway project (ETDM #12597, SR 87 Connector, Alternatives 1 - 6).

Comments on Effects to Resources:
Santa Rosa County (which includes the SR Connector Corridor) has not been designated non-attainment or maintenance for ozone, carbon monoxide (CO) or particulate matter (PM) in accordance with the Clean Air Act. There are no violations of National Ambient Air Quality Standards (NAAQS). Nevertheless, it is recommended that the environmental review phase of this project include air impact analyses which documents the current pollutant concentrations recorded at the nearest air quality monitors, an evaluation of anticipated emissions, and air quality trend analyses. It is also recommended that environmental reviews of the project include hot spot analyses at the points in time and places where congestion are expected to be greatest or in areas of sensitive receptors. Air quality modeling using an approved software program should be conducted to determine whether any conformity issues or violations of air quality standards are anticipated within the project area and/or counties. Current and proposed air quality requirements and standards should be used in modeling software programs.

Additional Comments (optional):
As population growth and vehicle volumes increase, there is the potential to have air quality conformity and non-attainment issues in the future. FDOT, MPOs, municipalities, and regional planning agencies should conduct air quality modeling as traffic forecasts increase.

Coordinator Feedback: None

- No review submitted from the Federal Highway Administration

Coastal and Marine

Coordinator Summary

2 Summary Degree of Effect

Coastal and Marine Summary Degree of Effect: Minimal

Reviewed By:
FDOT District 3 (4/21/2010)
Comments:
The Florida Department of Transportation (FDOT) has evaluated comments from the National Marine Fisheries Service (NMFS) and recommends a Degree of Effect of Minimal.

There are several important resources in the area; Pensacola Bay, East Bay, Blackwater Bay and the lower reaches of the Blackwater River, that contain habitats used by federally-managed fish species and their prey.

On January 12, 2010, NMFS staff conducted a site inspection of these areas. From this inspection, it was found that Alternative 2 does not appear to directly impact NMFS trust resources. However, due to possible indirect impacts, the FDOT acknowledges the NMFS recommendation that stormwater treatment systems be designed to prevent degraded water from reaching estuarine habitats. In addition, drainage and hydrologic functions will be considered during the design of the project and Best Management Practices (BMPs) will be utilized during construction to prevent siltation of downstream estuarine habitats.

The Federal Highway Administration (FHWA) did not provide comments.

ETAT Reviews for Coastal and Marine

2 ETAT Review by David A. Rydene, National Marine Fisheries Service (01/15/2010)

Coastal and Marine Effect: Minimal

Coordination Document: No Selection

Identified Resources and Level of Importance:
Pensacola Bay, East Bay, Blackwater Bay and the lower reaches of the Blackwater River. These systems contain estuarine and marine habitats used by federally-managed fish species and their prey.

Comments on Effects to Resources:
Alternative 2 - NMFS staff conducted a site inspection of the project area on January 12, 2010, to assess potential concerns to living marine resources within Pensacola Bay, East Bay, Blackwater Bay, and the lower reaches of the Blackwater River. The lands adjacent to the proposed alignment appear to be mostly forested palustrine wetlands. It does not appear that Alternative 2 will directly impact NMFS trust resources. However, the road would cross both the Blackwater River (just northeast of Cooper Basin) and Clear Creek, both of which drain to Blackwater Bay, East Bay, and Pensacola Bay. Therefore, the project may result in indirect impacts to downstream NMFS trust resources. Use of the road could result in an increase in the amount of sediment, oil and grease, metals, and other pollutants reaching estuarine habitats utilized by marine fishery resources. Therefore, NMFS recommends that stormwater treatment systems be designed to prevent degraded water from reaching estuarine and marine habitats. Best management practices should be employed during road construction to prevent siltation of downstream estuarine habitats. Additionally, the manner in which the road may affect drainage within the watershed and hydrologic functions should be considered.

Coordinator Feedback: None

- No review submitted from the Federal Highway Administration

Contaminated Sites

Coordinator Summary

2 Summary Degree of Effect

Contaminated Sites Summary Degree of Effect: Minimal

Reviewed By:
FDOT District 3 (4/21/2010)
Comments:
The Florida Department of Transportation (FDOT) has reviewed the comments from the Florida Department of Environmental Protection (FDEP) and the US Environmental Protection Agency (USEPA) and recommends a Degree of Effect of Minimal.

Both agencies found that GIS data indicated there is one Brownfield area, the Santa Rosa Brownfield Redevelopment Area, and a solid waste facility, G&D Tires, Inc., within the 500-ft. project buffer zone. Due to the fact that there are few contaminated sites identified within Alternative 2, impacts are expected to be minimal.

However, the FDOT acknowledges the FDEP comment that projects involving 'dewatering' should be discouraged and that dewatering projects would require permits / approval from the Northwest Florida Water Management District.

In addition, FDOT understands the importance of referencing "Section 120 Excavation and Embankment -- Subarticle 120-1.2 Unidentified Areas of Contamination of the Standard Specifications for Road and Bridge Construction" in the project's construction contract documents that would require specific actions by the contractor in the event of any hazardous material or suspected contamination issue arises. FDOT understands that potentially hazardous materials must be properly managed in accordance with Chapter 62 -730, F.A.C. In addition, any solid wastes or other non-hazardous debris must be managed in accordance with Chapter 62-701, F.A.C. Petroleum cleanups must be managed in accordance with Chapter 62-770, F.A.C.

As suggested by the FDEP, a Contamination Screening Evaluation will be performed. Also, we have noted the FDEP comment on the new rule, 62-780, F.A.C., which became effective on April 17, 2005, as well as, Chapters 62-770, 62-777, 62-782 and 62-785, F.A.C., that were amended on April 17, 2005, to incorporate recent statutory changes. We understand that depending on the findings of the environmental assessments, there may be "off-property" notification responsibilities potentially associated with this project.

Finally, the FDOT understands the USEPA comment that remediation may be required if contaminated site features are impacted and area sampling determines pollutants are present above regulatory levels.

No Comments were received from the Federal Highway Administration (FHWA)

ETAT Reviews for Contaminated Sites

2 ETAT Review by Lauren P. Milligan, FL Department of Environmental Protection (01/29/2010)
Contaminated Sites Effect: Minimal

Coordination Document: No Selection

Identified Resources and Level of Importance:
GIS data indicates that there is one brownfield area, the Santa Rosa Brownfield Redevelopment Area, and a solid waste facility, G&D Tires, Inc., within the 500-ft. project buffer zone.

Comments on Effects to Resources:
Contamination Screening Evaluations should outline specific procedures that would be followed by the applicant in the event that drums, wastes, tanks or potentially contaminated soils are encountered during construction.

In the event contamination is detected during construction, the Department and Santa Rosa County should be notified, and the FDOT may need to address the problem through additional assessment and remediation activities. Reference should be made to the most recent FDOT specification entitled "Section 120 Excavation and Embankment -- Subarticle 120-1.2 Unidentified Areas of Contamination of the Standard Specifications for Road and Bridge Construction" in the project's construction contract documents that would require specific actions by the contractor in the event of any hazardous material or suspected contamination issue arises.

Depending on the findings of the Contamination Screening Evaluations and the proximity to known contaminated sites, projects involving "dewatering" should be discouraged or limited, since there is a potential to spread contamination to previously uncontaminated areas or less contaminated areas and affect contamination receptors, site workers and the public. Dewatering projects would require permits / approval from the Northwest Florida Water Management District.

Any land clearing or construction debris must be characterized for proper disposal. Potentially hazardous materials must be properly managed in accordance with Chapter 62-730, F.A.C. In addition, any solid wastes or other non-hazardous debris must be managed in accordance with Chapter 62-701, F.A.C. Petroleum cleanups must be managed in accordance with Chapter 62-770, F.A.C.

Please be advised that a new rule, 62-780, F.A.C., became effective on April 17, 2005. In addition, Chapters 62-770, 62-777, 62-782 and 62-785, F.A.C., were amended on April 17, 2005, to incorporate recent statutory changes. Depending on the findings of the environmental assessments, there are "off-property" notification responsibilities potentially associated with this project. These rules may be found at the following website: http://www.dep.state.fl.us/waste/

Based on our experience, the accurate identification, characterization and cleanup of sites requires experienced consulting personnel and laboratory support, management commitment of the project developers and their representatives, and will likely be very time-consuming. Early planning to address these issues is essential to meet construction and cleanup (if required) timeframes. Innovative technologies, such as special storm water management systems, engineering controls and institutional controls, such as conditions on water production wells and dewatering restrictions, may be required, depending on the results of environmental assessments.

Coordinator Feedback: None

2 ETAT Review by Madolyn Dominy, US Environmental Protection Agency (01/27/2010)

Contaminated Sites Effect: Minimal

Coordination Document: No Selection

Identified Resources and Level of Importance:
Resources: Soils, groundwater, surface water which have the potential to be negatively affected by contaminated site features such as underground petroleum storage tanks, industrial/commercial facilities with onsite storage of hazardous materials, solid waste facilities, hazardous waste facilities, National Priority List (NPL) sites, etc.

Level of Importance: These resources are of a high level of importance in the State of Florida. However, a minimal degree of effect is being assigned for the proposed project Alternative 2 (ETDM #12597, SR 87 Connector).

Comments on Effects to Resources:
EPA reviewed the following contaminated sites GIS analysis data for buffer distances of 100, 200, and 500 feet: Brownfield Location Boundaries, Geocoded Dry Cleaners, Geocoded Gasoline Stations, Geocoded Petroleum Tanks, Hazardous Waste Sites, National Priority List Sites, Nuclear Site Locations, Solid Waste Facilities, Superfund Hazardous Waste Sites, TANKS-NOV 2007, Toxic Release Inventory Sites, and USEPA RCRA Facilities.

Overall, for Alternative 2, there are very few contaminated sites features within proximity of the proposed alignment. The following features are listed in the GIS analysis data at the programming screen phase of the project:

Brownfield Location Boundaries:
The Santa Rosa Brownfield Redevelopment Area is listed as being within proximity of the proposed roadway project. Brownfield projects are defined as abandoned, idled or under-utilized property where expansion or redevelopment is complicated by the presence or potential presence of environmental contamination. Previous thriving areas of economic activity are listed as Brownfield if the area is abandoned by contamination from past uses. Areas being unused or under-utilized are impediments to economic development in rural and urban communities. Redeveloped, these Brownfield areas can be catalysts for community revitalization. The Brownfield program brings together federal agencies to address cleanup and redevelopment in a more coordinated approach. Often times, federal grant programs and public/private organizations assist in the cleanup and redevelopment of Brownfield areas. The environmental review phase of the project should evaluate whether the classification of this area as a Brownfield Site will impact the roadway project.

Solid Waste Facilities:
G&D Tires, Inc (500-foot buffer distance)

No other contaminated sites features listed above were identified in the online EST GIS analysis data search.

Due to the fact that there are minimal to no contaminated sites features identified to be within the buffer boundaries, impacts to and/or from contaminated site features are expected to be minimal.

The environmental review (PD&E) phase of the project should include a survey of the area to confirm the location of current listed contaminated site features, along with other contaminated site features which may have been previously located in the area. If any contaminated sites features (e.g., petroleum storage tanks) are to be impacted or removed during the construction phase of the project, sampling and analysis should be conducted to determine if pollutants are present above regulatory levels. If high levels of pollutants are identified, remediation may be required prior to commencement of construction of the project.

Coordinator Feedback: None

- No review submitted from the Federal Highway Administration

Farmlands

Coordinator Summary

2 Summary Degree of Effect

Farmlands Summary Degree of Effect: Minimal

Reviewed By:
FDOT District 3 (3/30/2010)
Comments:
The Florida Department of Transportation (FDOT) has reviewed the comments from the Natural Resources Conservation Service (NRCS) and recommends a Degree of Effect of Minimal.

The NRCS found that Alternative 2 impacts less than 1 acre of Prime Farmland at the 200 ft buffer width and nearly 8 acres at the 500 ft buffer width. Because the impact to Ag and Prime Farmland was determined to be minimal, the NRCS assigned a minimal impact rating for this Alternative.

No Comments were received from the Federal Highway Administration (FHWA)

ETAT Reviews for Farmlands

2 ETAT Review by Rick Allen Robbins, Natural Resources Conservation Service (01/08/2010)

Farmlands Effect: Minimal

Coordination Document: No Selection

Identified Resources and Level of Importance:
The USDA-NRCS considers soil map units with important soil properties for agricultural uses to be Prime Farmland. In addition, the USDA-NRCS considers any soils used in the production of commodity crops (such as, cotton, citrus, row crops, specialty crops, nuts, etc.) to possibly be considered as Unique Farmlands. Nationally, there has been a reduction in the overall amount of Prime and Unique Farmlands through conversion to non-farm uses. This trend has the possibility of impacting the nation's food supply and exporting capabilities.

Comments on Effects to Resources:
Conducting GIS analysis of Prime Farmland (using USDA-NRCS data) and Important (Unique) Farmland Analysis (using 2004 NWFWMD data) has resulted in the determination that there are Prime Farmland soils at all buffer widths within the Project Area. Conducting GIS analysis of Prime Farmland (using USDA-NRCS data) and Important (Unique) Farmland Analysis (using 2004 NWFWMD data) has resulted in the determination that there are Prime Farmland soils at all buffer widths within the Project Area. Alternative #2 impacts less than 1 acre of Prime Farmland up to the 200 foot buffer width, and nearly 8 acres at the 500 foot buffer width. Impacts to Ag lands are primarily restricted to improved and unimproved pasture. Since the impact to Ag and Prime Farmland is minimial, we are assigning a minimal impact rating for this Alternative.

Coordinator Feedback: None

- No review submitted from the Federal Highway Administration

Floodplains

Coordinator Summary

4 Summary Degree of Effect

Floodplains Summary Degree of Effect: Substantial

Reviewed By:
FDOT District 3 (4/21/2010)
Comments:
The Florida Department of Transportation (FDOT) has reviewed the comments from the Northwest Florida Water Management District (NWFWMD) and the US Environmental Protection Agency (USEPA) and recommends a Degree of Effect of Substantial.

The NWFWMD's review found that approximately 180 acres of special flood hazard area are within the 500 foot buffer for this alignment. The flood prone areas are associated with Blackwater River and Clear Creek. In addition, approximately 109 acres are designated as storm surge zones under a Category 5 storm and Elevation ranges from approximately 0 to 182 feet NAVD 88.

The USEPA review of GIS analysis data (DFIRM 100-Year Floodplain and Special Flood Hazard Areas) indicates that all of the Alternatives (1 through 6) have approximately 20% of their acreage within the 100-year floodplain, as designated primarily by Zone AE of the flood hazard zone designation.

The FDOT acknowledges the comments from both agencies concerning the placement of a new roadway and how it will impact flow and possibly alter flood storage capacity. During the conceptual drainage analysis in the PD&E process, engineering design features and hydrological drainage structures will be proposed that will address stormwater transport, flow, and ensure discharge meets or exceeds flood control requirements. This analysis will ensure that the project will comply with the appropriate minimum FEMA floodplain management requirements for any changes in the floodplain elevations. This will include coordination on any appropriate studies and map revisions required by Title 44, Code of Federal Regulations.

FDOT understands the need for consultation, and coordination with appropriate flood management agencies will occur relating to regulatory requirements, avoidance, minimization and/or mitigation strategies. Hydrologic connectivity and integrity should be maintained and where impact avoidance is impossible and wetlands and streams must be crossed, extended elevated bridges should be employed to protect the integrity of stream corridors, hydrology, and floodplain functions.

No Comments were received from the Federal Highway Administration (FHWA).

ETAT Reviews for Floodplains

4 ETAT Review by Leigh Brooks, Northwest Florida Water Management District (01/29/2010)

Floodplains Effect: Substantial

Coordination Document: No Selection

Identified Resources and Level of Importance:
Approximately 180 acres of special flood hazard area are identified within the 500 foot buffer for this alignment. Flood prone areas are associated with Blackwater River and Clear Creek. Approximately 109 acres are designated as storm surge zones under a Category 5 storm. Elevation ranges from approximately 0 to 182 feet NAVD 88.

Comments on Effects to Resources:
Floodplain function could be diminished with a new road, as water storage and flood attenuation potential will be impacted. Placement of roadway fill has the potential to impound waters and otherwise redirect flow, affecting floodplain, wetland, and riverine resources. Likewise, the use of culverts has the potential for altering stream channels and flow. Efforts should be made within the project area to protect floodplain resources and capacity and to prevent offsite flooding.

Proposed activities have the potential to diminish water quality, environmental resiliency, wetland and transitional habitat, and associated economic and environmental benefits provided by a fully functioning, intact floodplain.

Additional Comments (optional):
Efforts should be made to protect floodplain resources and functions. Assurances should be provided that the project has complied with the appropriate minimum FEMA floodplain management requirements for any changes in the floodplain elevations. This includes appropriate studies and map revisions required by Title 44, Code of Federal Regulations.

Hydrologic connectivity and integrity should be maintained. Where impact avoidance is impossible and wetlands and streams must be crossed, extended elevated bridges should be employed to protect the integrity of stream corridors, hydrology, and floodplain functions.

Coordinator Feedback: None

3 ETAT Review by Madolyn Dominy, US Environmental Protection Agency (01/28/2010)
Floodplains Effect: Moderate

Coordination Document: No Selection

Identified Resources and Level of Importance:
Resources: Floodplains

Level of Importance: Development within the 100-year floodplain is of a high level of importance. Construction of roadways within the floodplain should not impede, obstruct or divert the flow of water or debris in the floodplain which would alter the roadway's discharge capacity or otherwise adversely affect public health, safety and welfare, or cause damage to public or private property in the event of a flood. A moderate degree of effect is being assigned for the proposed project (ETDM #12597, SR 87 Connector).

Comments on Effects to Resources:
A review of GIS analysis data (DFIRM 100-Year Floodplain and Special Flood Hazard Areas) in the EST at the programming screen phase of the project indicates that all of the Alternatives (1 through 6) have approximately 20% of the acreage within the 100-year floodplain, as designated primarily by Zone AE of the flood hazard zone designation.

General comments relating to floodplains include the fact that any development within the 100-year floodplain has the potential for placing citizens and property at risk of flooding and producing changes in floodplain elevations and plan view extent. Development (such as roadways, housing developments, strip malls and other commercial facilities) within floodplains increases the potential for flooding by limiting flood storage capacity and exposing people and property to flood hazards. Development also reduces vegetated buffers that protect water quality and destroys important habitats for fish and wildlife. The area surrounding the proposed roadway project is expected to experience growth, and the SR 87 Connector would likely result in development which would have indirect and cumulative effects on floodplains in the SR 87 Connector corridor.

The PD&E phase of the project should include an evaluation of floodplain impacts. FDOT should consider alternatives to avoid adverse effects and incompatible development in the floodplains. Efforts should be made to avoid or minimize impacts to floodplain resources and functions. Engineering design features and hydrological drainage structures should be such that stormwater transport, flow, and discharge meet or exceed flood control requirements. Consultation and coordination with appropriate flood management agencies should occur relating to regulatory requirements, avoidance, minimization and/or mitigation strategies.

Coordinator Feedback: None

- No review submitted from the FL Department of Environmental Protection
- No review submitted from the Federal Highway Administration

Infrastructure

Coordinator Summary

1 Summary Degree of Effect

Infrastructure Summary Degree of Effect: Enhanced

Reviewed By:
FDOT District 3 (4/21/2010)
Comments:
The Florida Department of Transportation (FDOT) recommends a Degree of Effect of Enhanced for Infrastructure.

This Alternative provides for a much needed facility to more effectively distribute traffic throughout the area. One of the enhancements to the area infrastructure includes providing a new bridge crossing across the Blackwater River. It also provides a more direct connection between I-10 and the Naval Air Station, Whiting Field. Alternative 2 also positively contributes to bicycle and pedestrian modes of travel by linking areas currently isolated.

No comments were received from the Federal Highway Administration (FHWA).

ETAT Reviews for Infrastructure

No reviews found for the Infrastructure Issue.
- No review submitted from the Federal Highway Administration

Navigation

Coordinator Summary

2 Summary Degree of Effect

Navigation Summary Degree of Effect: Minimal

Reviewed By:
FDOT District 3 (4/21/2010)
Comments:
The Florida Department of Transportation (FDOT) has reviewed the comments from the US Army Corps of Engineers (USACOE) and the US Coast Guard (USCG) and recommends a Degree of Effect of Minimal.

The FDOT acknowledges the USACOE comment that Blackwater River appears to be navigable and the bridge design should take into account the type of boat traffic traditionally on this waterway. In addition, FDOT also notes the USCG comment that crossing this waterway will need to be evaluated by the USCG to determine possible bridge permitting requirements.

No Comments were received from the Federal Highway Administration (FHWA).

ETAT Reviews for Navigation

2 ETAT Review by Philip R Johnson, US Coast Guard (12/18/2009)

Navigation Effect: Minimal

Coordination Document: To Be Determined: Further Coordination Required

Identified Resources and Level of Importance:
This segment of the project does not appear to cross any major navigable waterways.

Comments on Effects to Resources:
Segment 2 does not appear to have a substantial effect on major waterway crossings. However any crossing of waterways will need to be evaluated by the Coast Guard to determine possible bridge permitting requirements.

CLC Commitments and Recommendations:

Coordinator Feedback: None

2 ETAT Review by Randy Turner, US Army Corps of Engineers (12/24/2009)

Navigation Effect: Minimal

Coordination Document: No Selection

Identified Resources and Level of Importance:
Blackwater River appears to be navigable water for recreational users. The river is one of the four river river systems that drains the Pensacola Bay watershed and drains into the Blackwater Bay estuary. Impacts to navigation should be minimal.

Comments on Effects to Resources:
The bridge design should take into account the type of boat traffic that traditionally uses the waterway. A taller and longer span design would also reduce impacts to the abutting wetland system.

Coordinator Feedback: None

- No review submitted from the Federal Highway Administration

Special Designations

Coordinator Summary

3 Summary Degree of Effect

Special Designations Summary Degree of Effect: Moderate

Reviewed By:
FDOT District 3 (4/21/2010)
Comments:
The Florida Department of Transportation (FDOT) has reviewed the comments from the US Environmental Protection Agency (USEPA) and recommends a Degree of Effect of Moderate.

USEPA's review of GIS data included finding the following Special Designation Sites within the proximity of Alternative 2: Brownfield Location Boundaries, Special Flood Hazard Areas, Florida Forever BOT Lands, Public Lands, Prime Farm Land, and Outstanding Florida Waters.

The USEPA assigned a Moderate degree of effect because of the inclusion of an Outstanding Florida Water in this list. The Blackwater River is listed as an Outstanding Florida Water (OFW) and as such, is provided the highest level of protection under the Florida Administrative Code (F.A.C.). Degradation of water quality in an OFW is prohibited except under certain circumstances. Pollutant discharges must not lower existing ambient water quality. Any activity within an OFW requiring a Florida Department of Environmental Protection (FDEP) Environmental Resource Permit (ERP) must be deemed to be clearly in the public interest. FDOT will coordinate and consult with FDEP about the specific permitting requirements relating to this OFW.

No Comments were received from the Federal Highway Administration (FHWA) or the FL Department of Agriculture and Consumer Services.

ETAT Reviews for Special Designations

3 ETAT Review by Madolyn Dominy, US Environmental Protection Agency (01/29/2010)

Special Designations Effect: Moderate

Coordination Document: No Selection

Identified Resources and Level of Importance:
Resources: Brownfield Location Boundaries, Florida Forever BOT Projects, Special Flood Hazard

Areas, Public Lands (such as conservation easements, preserves, and conservation areas), Outstanding Florida Waters, Prime Farm Lands.

Level of Importance: These special designation features are of a high level of importance in the State of Florida. A moderate degree of effect is being assigned to this issue due to the fact that are special designation features, including an Outstanding Florida Water, within proximity of the proposed project.

Comments on Effects to Resources:
A review of GIS analysis data at the programming screen phase of the project indicates that the following features identified as Special Designations are located within proximity of Alternative 2:

Brownfield Location Boundaries - See Comments under Contaminated Sites issue regarding Brownfield Redevelopment Areas.

Special Flood Hazard Areas - See Comments under Floodplains issue regarding potential floodplain impacts.

Florida Forever BOT Projects - See Comments under Recreation Areas issue regarding potential impacts to Florida Forever BOT Projects and sensitive recreational/natural resource areas.

Public Lands - See Comments under Recreation Areas issue regarding potential impacts to public lands and sensitive recreational/natural resource areas.

Prime Farm Land - There are three tracts of land within the 500-feet buffer distances (Kalmia, Johns, Dothan) that are designated Prime Farm Land. Prime farm land is a designation assigned by the US Department of Agriculture for land that has the best combination of physical and chemical characteristics for producing food, feed, forage, fiber, and oilseed crops and is also available for these uses. It has the soil quality, growing season, and moisture supply needed to produce economically sustained high yields of crops when treated and managed according to acceptable farming methods. Prime farmland in the U.S. has been prone to conversion when in proximity to urban growth areas. Having property designated as USDA prime farm land can help with growth management and resource conservation efforts. Zoning and conservation easements help to preserve prime farm land resources. FDOT should consult with appropriate regulatory agencies (e.g., NRCS) regarding potential impacts to prime farm land.

Outstanding Florida Waters - A review of GIS analysis data at the programming screen phase of the project indicates that the Blackwater River is within 100 feet of the proposed project. The Blackwater River is listed as an Outstanding Florida Water (OFW). OFWs are provided the highest level of protection under the Florida Administrative Code (F.A.C.). Degradation of water quality in an OFW is prohibited except under certain circumstances. Pollutant discharges must not lower existing ambient water quality. Any activity within an OFW requiring a Florida Department of Environmental Protection (FDEP) Environmental Resource Permit (ERP) must be deemed to be clearly in the public interest. FDOT should coordinate and consult with FDEP requiring specific permitting requirements relating to this OFW. Increased and/or future development in the corridor surrounding the project may also have indirect and cumulative impacts on the Blackwater River and its tributaries.

EPA is assigning a moderate degree of effect to this issue due to the fact that there are sensitive environmental and natural resource areas located directly adjacent to the project. Also, the possibility of increased future development in the area would have indirect and cumulative impacts on these types of resources.

Coordinator Feedback: None

- No review submitted from the FL Department of Agriculture and Consumer Services
- No review submitted from the Federal Highway Administration

Water Quality and Quantity

Coordinator Summary

4 Summary Degree of Effect

Water Quality and Quantity Summary Degree of Effect: Substantial

Reviewed By:
FDOT District 3 (5/12/2010)
Comments:
The Florida Department of Transportation (FDOT) has reviewed the comments from the US Environmental Protection Agency (USEPA), the Florida Department of Environmental Protection (FDEP) and Northwest Florida Water Management District (NWFWMD) and recommends a Degree of Effect of Substantial.

FDOT acknowledges that protecting water resources such as surface water quality is a priority of federal and state environmental agencies. All agencies commented that every effort should be made to maximize the treatment of stormwater runoff, because area stormwater discharges to the Blackwater River and eventually to the Yellow River Marsh Aquatic Preserve, both designated Outstanding Florida Waters (OFW) under section 62-302.700(9), F.A.C., and afforded a high level of protection under sections 62-4.242(2) and 62-302.700, F.A.C. Pursuant to section 373.414(1), F.S., direct impacts to these waterbodies and associated wetlands must be demonstrated to be "clearly in the public interest" as part of the Environmental Resource Permitting (ERP) process. In addition, the permit applicant may be required to demonstrate that the proposed stormwater system meets the design and performance criteria established for the treatment and attenuation of discharges to OFWs, pursuant to Chapter 62-346, F.A.C., and the DEP and NWFWMD ERP Applicant's Handbook.

FDOT is also taking note of the USEPA and NWFWMD comments that the various Alternatives are located within proximity to water bodies that are impaired for various pollutants (coliforms and mercury). The PD&E study will include a review of water quality standards in water bodies listed on the Clean Water Act 303(d) list of impaired waters. The western end of the segment lies in a subwatershed of the Blackwater River which is verified impaired for coliforms and mercury. The GIS analysis indicated there were 5 wells within a 500 foot buffered polygon. The western end of the polygon lies in an area "vulnerable" to contamination of the Floridan Aquifer and the majority of the polygon shows as "more vulnerable" to contamination of the surficial aquifer, according to the Florida Aquifer Vulnerability Assessment. In addition, approximately 33 acres of the buffered polygon have a slope greater than 10 percent. This ranks as the highest of the six alternatives. Most of these areas are located on the southern bank of the Blackwater River floodplain and the west bank of Clear Creek, along which the roadway would traverse for about 1.5 miles. Steep slopes are susceptible to erosion initiated by ground disturbance

NWFWMD also added a comment that the Blackwater River and its receiving water, Blackwater Bay, are components of the larger Pensacola Bay Watershed and are Surface Water Improvement and Management (SWIM) priority waters of the NWFWMD. It should be noted that the river and floodplain corridor are priority for acquisitions for NWFWMD and the river is federally designated critical habitat for the Gulf sturgeon (Acipenser oxyrinchus desotoi). Also, NWFMD expressed concern about impacts to Clear Creak or any disturbance of the escarpment west of the creek because it could subject this water body to water quality problems.

Considering the data provided as well as internal data and analysis, all of the proposed alternatives would have substantial impacts to water resources. According to the NWFWMD, the apparent least adverse impact would occur under Alternative 1, followed by Alternative 2. Alternatives 3, 4, 5 and 6 have greater wetland impacts, infringe on protected conservation lands, and have greater potential secondary and cumulative impacts. Alternative 3 has the greatest impact to floodplains, and Alternatives 4, 5 and 6 are

more vulnerable to storm surges. Alternative 2 presents a concern due to alignment along a steeply sloped, erosion-prone valley wall and proximity to a stream.

FDOT will use appropriate storm water treatment systems, best management practices (BMPs), and land planning to prevent non point source pollution as suggested by the NWFWMD.

No Comments were received from the Federal Highway Administration (FHWA).

ETAT Reviews for Water Quality and Quantity

4 ETAT Review by Madolyn Dominy, US Environmental Protection Agency (01/31/2010)

Water Quality and Quantity Effect: Substantial

Coordination Document: No Selection

Identified Resources and Level of Importance:
Resources: Water quality, surface water, groundwater

Level of Importance: These resources are of a high level of importance in the State of Florida. A substantial degree of effect is being assigned to this issue.

Comments on Effects to Resources:
Protecting water resources such as surface water quality is a priority of federal and state environmental agencies. Primary sources of surface water quality impairment include point and non-point sources. A primary concern regarding water quality for the proposed project is the impact to surface water quality as a result of stormwater runoff into nearby surface water bodies. Stormwater runoff from the roadway would directly affect Blackwater River and other surface water bodies (such as Clear Creek). Blackwater River drains to Blackwater Bay and is part of the Pensacola Bay watershed.

Stormwater runoff from urban sources, including roadways, carries pollutants such as volatile organics, petroleum hydrocarbons, heavy metals, and pesticides/herbicides. Proper stormwater conveyance, containment, and treatment will be required in accordance with state and federal regulations and guidelines. A comprehensive evaluation of stormwater management issues in the project drainage basins (watershed) should be conducted. The construction of the SR 87 Connector could lead to increased growth, development, and population in this section of Santa Rosa County. Increased development leads to the increase of impervious surfaces (leading to stormwater runoff). Stormwater management issues become more critical to the reduction of pollution into surface waters.

The Blackwater River is listed as an Outstanding Florida Water (OFW). OFWs are provided the highest level of protection under the Florida Administrative Code (F.A.C.). Degradation of water quality in an OFW is prohibited except under certain circumstances. Pollutant discharges must not lower existing ambient water quality. Any activity within an OFW requiring a Florida Department of Environmental Protection (FDEP) Environmental Resource Permit (ERP) must be deemed to be clearly in the public interest. FDOT should coordinate and consult with FDEP requiring specific permitting requirements relating to this OFW. Increased and/or future development in the corridor surrounding the project may also have indirect and cumulative impacts on the Blackwater River and its tributaries.

Another issue of concern regarding water quality is the potential for the project to impact any private or public drinking water wells identified as being within the project area. A review of the presence of and/or location of drinking water wells should be identified. The project should avoid impact to any

private or public potable drinking water wells or their source. Coordination with local and state drinking water agencies may be necessary.

The various Alternatives are located within proximity to water bodies that are impaired for various pollutants (fecal coliform and mercury). The PD&E study should include a review of water quality standards in water bodies listed on the Clean Water Act 303(d) list of impaired waters. It should also evaluate sources of water quality impairments and TMDL requirements and how these regulations and/or requirements may affect the proposed project and environmental resource permits. It is recommended that FDOT consult with the Florida Department of Environmental Protection water quality program on this issue.

The proposed SR 87 Connector will include a bridge crossing over the Blackwater River and possibly other water bodies. Construction activities such as construction of a new bridge structure would likely have direct, indirect, and cumulative impacts on these surface waters. Impacts should be evaluated and clearly documented in PD&E technical documents or reports. Various bridge construction alternatives and opportunities to avoid or minimize impacts to water quality should be evaluated and considered to the greatest extent practicable.

Due to the potential to have a significant impact on surface water bodies, the PD&E study should include an indepth review of surface water quality data, any water quality concerns in nearby surface waters and wetlands, and groundwater concerns and/or issues. FDOT should consult with FDEP and the Northwest Florida Water Management District on stormwater permitting issues and other water quality issues relating to point and nonpoint source discharges into surface water bodies.

Coordinator Feedback: None

3 ETAT Review by Lauren P. Milligan, FL Department of Environmental Protection (01/29/2010)
Water Quality and Quantity Effect: Moderate

Coordination Document: Permit Required

Identified Resources and Level of Importance:
Every effort should be made to maximize the treatment of stormwater runoff from the proposed highway connector project, as area stormwater discharges to the Blackwater River and eventually to the Yellow River Marsh Aquatic Preserve, both designated Outstanding Florida Waters (OFW) under section 62-302.700(9), F.A.C., and afforded a high level of protection under sections 62-4.242(2) and 62-302.700, F.A.C. Pursuant to section 373.414(1), F.S., direct impacts to these waterbodies and associated wetlands must be demonstrated to be "clearly in the public interest" as part of the Environmental Resource Permitting (ERP) process. We recommend that the PD&E study include an evaluation of existing area stormwater treatment adequacy and details on the future stormwater treatment facilities. The permit applicant may be required to demonstrate that the proposed stormwater system meets the design and performance criteria established for the treatment and attenuation of discharges to OFWs, pursuant to Chapter 62-346, F.A.C., and the DEP and NWFWMD ERP Applicant's Handbook.

Comments on Effects to Resources:
Stormwater runoff from the road surface may alter adjacent wetlands and surface waters through increased pollutant loading. Natural resource impacts within and adjacent to the proposed highway right-of-way will likely include alteration of the existing surface water hydrology and natural drainage patterns, and reduction in flood attenuation capacity of area creeks, ditches, and sloughs as a result of increased impervious surface within the watershed. Stormwater treatment should be designed to

maintain the natural pre-development hydroperiod and water quality, as well as to protect the natural functions of adjacent wetlands, floodplains, and waterbodies.

Coordinator Feedback: None

4 ETAT Review by Leigh Brooks, Northwest Florida Water Management District (01/29/2010)
Water Quality and Quantity Effect: Substantial

Coordination Document: To Be Determined: Further Coordination Required

Identified Resources and Level of Importance:
Surface water - Stormwater runoff from this project would directly affect the Blackwater River and its extensive floodplain, Clear Creek and one unnamed intermittent stream. The Blackwater River and its receiving water Blackwater Bay are components of the larger Pensacola Bay Watershed and are Surface Water Improvement and Management (SWIM) priority waters of the NWFWMD. The District has identified the river and floodplain corridor as a priority for acquisition. The Blackwater River receives additional protection as an Outstanding Florida Water. The river is federally designated critical habitat for the Gulf sturgeon (Acipenser oxyrinchus desotoi).

Ground water - GIS analysis indicates 5 wells within a 500 foot buffered polygon. The western end of the polygon lies in an area "vulnerable" to contamination of the Floridan Aquifer and the majority of the polygon shows as "more vulnerable" to contamination of the surficial aquifer, according to the Florida Aquifer Vulnerability Assessment. The District has identified uplands at the southern terminus of the corridor for acquisition to protect groundwater recharge.

Slope - Approximately 33 acres of the buffered polygon have a slope greater than 10 percent. This ranks as the highest of the six alternatives. Most of these areas are located on the southern bank of the Blackwater River floodplain and the west bank of Clear Creek, along which the roadway would traverse for about 1.5 miles. Steep slopes are susceptible to erosion initiated by ground disturbance. In fact, LiDAR coverage shows that this area is already plagued with gully erosion from unpaved roads. Clear Creek appears to contain numerous seepage ravines and is therefore a sensitive resource.

Comments on Effects to Resources:
Construction and long-term use of roadway facilities would generate non-point source pollution associated with stormwater runoff and would impact receiving water bodies and wetlands. Inadequate crossing of Clear Creek or disturbance of the escarpment west of the creek could subject this water body to water quality problems.

Assurances should be provided that stormwater management and treatment as well as erosion control of steep slopes will be sufficient to prevent long-term, cumulative degradation of water quality and aquatic habitat.

Additional Comments (optional):
Considering the data provided as well as internal data and analysis, all of the proposed alternatives would have substantial impacts to water resources. The apparent least adverse impact would occur under Alternative 1, followed by Alternative 2. Alternatives 3, 4, 5 and 6 have greater wetland impacts, infringe on protected conservation lands, and have greater potential secondary and cumulative impacts. Alternative 3 has the greatest impact to floodplains, and Alternatives 4, 5 and 6 are more vulnerable to storm surges. Alternative 2 presents a concern due to alignment along a steeply sloped, erosion-prone valley wall and proximity to a stream.

Appropriate stormwater treatment systems, best management practices, and land planning must be employed to prevent nonpoint source pollution and other potential impacts. The crossing for Clear Creek needs to be more clearly described in order to assess potential impacts. Roadway design should incorporate extended elevated bridges spanning the full floodplain with no supports in the flow way to reduce impacts to wetlands, allow for hydrologic and habitat connectivity, and protect water quality.

Project work would require stormwater permitting in compliance with the Environmental Resource Permitting program, per Chapter 62-346, F.A.C. Additional local permit requirements may apply as well.

Coordinator Feedback: None

- No review submitted from the Federal Highway Administration

Wetlands

Coordinator Summary

4 Summary Degree of Effect

Wetlands Summary Degree of Effect: Substantial

Reviewed By:
FDOT District 3 (4/21/2010)
Comments:
The Florida Department of Transportation (FDOT) has evaluated comments from the FL Department of Environmental Protection (FDEP), the US Environmental Protection Agency (USEPA), the Northwest Florida Water Management District (NWFWMD), US Fish and Wildlife, National Marine Fisheries Service and the US Army Corps of Engineers (ACOE) and recommends a Degree of Effect of Substantial.

The FDOT understands the importance of the wetlands in the project area and we will make every effort to prioritize the alternatives, as well as the final alignment within the selected alternative, utilizing agency comments in order to reduce to the extent practicable any adverse impacts. Many of the comments made about the project were similar for all of the above agencies. The FDOT understands the common concerns, as per the agencies requests, that must be included in the PD&E Study process to be the following:

1. The GIS review found wetlands within 100, 200, and 500 ft buffers of all alternatives. FDOT understands that all alternatives will have an impact to water resources that must be mitigated.
2. The project area encompasses a major river system, the Blackwater and Big Coldwater Creek, Clear Creek and Pond Creek Tributaries.
3. Permitting - An environmental resource permit will be necessary and will need to reflect efforts made to reduce impacts. In addition, the project may require a Section 404 wetland permit.
4. The Blackwater River - designated Special Outstanding Florida Waters and Surface Water Improvement and Management (SWIM) priority waters - flows into the Yellow River Marsh Aquatic Preserve and Class II shellfish harvesting waters. The designations thus reflected in Chapters 253, 258, 373, and 403, F.S., afford the highest level of state protection to the Blackwater River and the downstream estuarine system of Blackwater Bay and East Bay. Every effort should be made to minimize impacts to these areas.
5. Possible Direct Effects that should be reviewed include stream diversion, wetland fill, erosion, etc. Indirect effects include stormwater runoff, increased pollutants into surface waters and wetlands (water quality), etc.

6. The Blackwater River is included in Critical Habitat Unit 4 - the Yellow River System - for the federally threatened Gulf sturgeon.

Comments on Alternative 2 specifically were made by several agencies. The FLDEP stated that the EST indicated there are 163.1 acres of palustrine and 5.1 acres of riverine wetlands within the 500 ft buffer zone. FDOT will use this information during the PD&E study as a comparison to the other alternatives' impacts. The NWFWMD and USFWS further reviewed the NWI wetlands as well and stated that Alternative 2 has the LEAST wetland acreage impact of the six alternatives. Roughly 16 percent of this alternative is wetlands. They further added that the alternative lies in the Gulf Coastal Lowlands and Western Highlands physiographic provinces and the Southern Pine Plains and Hills ecoregion. The alternative goes through a wetland designated as critical habitat for the reticulated flatwoods salamander (Ambystoma bishop), a federally listed endangered species. A known historic breeding pond for the flatwoods salamander, vegetated with pond cypress and slash pine, is located on private property adjacent to Alternatives 1-3. This pond and its associated uplands are designated as Critical Habitat Unit RFS-2, Subunit A (162 acres). FDOT also notes the comments include that White-top pitcherplant (Sarracenia leucophylla) and Curtiss' sandgrass (Calamovilfa curtissii), state-endangered and state-threatened wetland plants respectively, occur within 600 feet of the alternative, and there is potential for them to occur within the alternative. Threatened and Endangered Species reviews will be done as part of the PD&E Study.

Current land use according to 2004 FDEP Land Use and Land Cover is primarily upland and wetland mixed forest, forest regeneration areas, coniferous plantations, shrub and brushland, electrical power transmission lines, and mixed rangeland. Land cover is mostly wooded. The NWFWMD commented that Alternative 1, followed by Alternative 2 would have the apparent least adverse impacts. This alternative is tangent to an undeveloped public parcel encompassing a portion of Clear Creek managed as part of the Blackwater Heritage State Trail. Alternative 2 presents a concern due to alignment along a steeply sloped, erosion-prone valley wall and proximity to a stream.

The National Marine Fisheries Services (NMFS) also commented on Alternative 2. After a site inspection on January 12, 2010 to assess the potential concerns within Pensacola Bay, East Bay, Blackwater Bay, and the lower reaches of Blackwater River, NMFS found that it does not appear Alternative 2 will directly impact NMFS trust resources. However, FDOT understand stormwater treatment systems must be designed to prevent indirect impacts to Blackwater Bay, East Bay, and Pensacola Bay.

Finally the USACOE commented that the EST found that approximately 33.1 acres of NWI Palustrine wetlands and 0.7 acres of Blackwater River exist within the 100 ft buffer. They commented that Alternative 2 provides the second LEAST overall impacts to jurisdictional waters of the United States.

Finally, there were several similar recommendations that should be noted that will be included as part of the PD&E Study. They were:

1. Early interagency planning and coordination of wetland mitigation alternatives are required in accordance with Section 373.4137, Florida Statutes;
2. The design of bridges and culverts should be adjusted to minimize unavoidable impacts;
3. Stormwater treatment systems should be designed to prevent degraded water from reaching estuarine and marine habitats;
4. Mitigation measures should be implemented to replace the areal extent as well as the functions and values of the aquatic resources that would be impacted.

The FDOT is aware that suitable mitigation measures include wetland restoration or enhancement, culvert/bridge design measures to enhance fish and wildlife movement at crossings, stream restoration measures such as replacing riprap with biotechnical erosion controls, or restoring suitable meander geometry. In addition, land acquisition and mitigation opportunities proximate to the project impacts may be the best options to offset wetland functional losses.

A Wetlands Evaluation Report (WER) and Endangered Species Biological Assessment (ESBA) will be prepared as part of the PD&E Study. Coordination with the commenting agencies will occur throughout the PD&E Study.

No Comments were received from the Federal Highway Administration (FHWA).

ETAT Reviews for Wetlands

3 ETAT Review by Madolyn Dominy, US Environmental Protection Agency (01/29/2010)
Wetlands Effect: Moderate

Coordination Document: No Selection

Identified Resources and Level of Importance:
Resources: Wetlands, wetlands habitat, water quality

Level of Importance: These resources are of a high level of importance in the State of Florida and within the project corridor(s). Wetlands provide for water quality enhancement, flood storage capacity, drainage, and wildlife habitat. Due to the potential to directly impact wetlands, EPA is assigning a moderate degree of effect to the wetlands issue for Alternatives 1 through 6.

Comments on Effects to Resources:
A review of GIS analysis data (National Wetlands Inventory) in the EST for wetlands indicates that there are wetlands present along the roadway corridor within the 100, 200, and 500 foot buffer distances for all Alternatives.

The project has the potential to impact wetland resources, including wetlands associated with Blackwater River and its associated tributaries. Development activities, including the construction of new roadways, have the potential to directly and/or indirectly affect wetlands, water quality, and aquatic habitats associated with clearing operations and construction of new stream or wetland crossings.

Any land clearing operations involving vegetation removal with mechanized equipment such as front -end loaders, backhoes, or bulldozers with sheer blades, rakes or discs in wetlands; or windrowing of vegetation, land leveling; or other soil disturbances are considered placement of fill material in wetlands and would likely require a Section 404 wetland permit. Any unavoidable wetland impacts should preferably be mitigated within the same watershed to result in no net loss of aquatic functions.

Other issues of concern include increased stormwater runoff and the increase of pollutants into surface waters and wetlands as a result of the roadway and other point and nonpoint sources. Design and planning should ensure that stormwater runoff does not enter surface waters directly. This can include the use of enhanced swales, stormwater ponds, and sediment basins to capture and treat post-construction stormwater runoff to minimize impacts to important aquatic resources and wetlands. Every effort should be made to maximize the treatment of stormwater. Stormwater treatment areas/ponds should be designed to protect the function of surrounding wetlands, floodplains, and surface water features.

It is recommended that the environmental phase (PD&E) of the project include delineation of wetlands; functional analysis of wetlands to determine their value and function; an evaluation of stormwater pond sites to determine their impact on wetlands; a review of surface water crossings (such as bridges) to determine their impact on wetlands and floodplains; avoidance and minimization strategies for wetlands; and mitigation plans to compensate for adverse impacts.

Indirect and cumulative effects on wetlands should be evaluated to identify and quantify incremental and cumulative impacts on natural resources (wetlands) as a result of past, present, and reasonably

foreseeable actions, including the proposed project and other land use actions.

Coordinator Feedback: None

2 ETAT Review by David A. Rydene, National Marine Fisheries Service (01/15/2010)
Wetlands Effect: Minimal

Coordination Document: No Selection

Identified Resources and Level of Importance:
Pensacola Bay, East Bay, Blackwater Bay and the lower reaches of the Blackwater River. These systems contain estuarine and marine habitats used by federally-managed fish species and their prey.

Comments on Effects to Resources:
Alternative 2 - NMFS staff conducted a site inspection of the project area on January 12, 2010, to assess potential concerns to living marine resources within Pensacola Bay, East Bay, Blackwater Bay, and the lower reaches of the Blackwater River. The lands adjacent to the proposed alignment appear to be mostly forested palustrine wetlands. It does not appear that Alternative 2 will directly impact NMFS trust resources. However, the road would cross both the Blackwater River (just northeast of Cooper Basin) and Clear Creek, both of which drain to Blackwater Bay, East Bay, and Pensacola Bay. Therefore, the project may result in indirect impacts to downstream NMFS trust resources. Use of the road could result in an increase in the amount of sediment, oil and grease, metals, and other pollutants reaching estuarine habitats utilized by marine fishery resources. Therefore, NMFS recommends that stormwater treatment systems be designed to prevent degraded water from reaching estuarine and marine habitats. Best management practices should be employed during road construction to prevent siltation of downstream estuarine habitats. Additionally, the manner in which the road may affect drainage within the watershed and hydrologic functions should be considered.

Coordinator Feedback: None

4 ETAT Review by Lauren P. Milligan, FL Department of Environmental Protection (01/29/2010)
Wetlands Effect: Substantial

Coordination Document: Permit Required

Identified Resources and Level of Importance:
The proposed project area encompasses a major river system - the Blackwater River and Big Coldwater Creek, Clear Creek and Pond Creek tributaries - together with associated floodplains and wetland areas, and is hydrologically connected to Blackwater Bay, East Bay and Pensacola Bay in the Blackwater River and Pensacola Bay basins.

The EST indicates that there are 163.1 acres of palustrine and 5.1 acres of riverine wetlands within the 500-ft. buffer zone of the project.

Comments on Effects to Resources:

The environmental resource permit applicant will be required to eliminate or reduce the proposed wetland resource impacts of highway connector construction to the greatest extent practicable:
- Minimization should emphasize avoidance-oriented corridor alignments, wetland fill reductions via pile bridging and steep/vertically retained side slopes, and median width reductions within safety limits.
- Wetlands should not be displaced by the installation of stormwater conveyance and treatment swales; compensatory treatment in adjacent uplands is the preferred alternative.
- After avoidance and minimization have been exhausted, mitigation must be proposed to offset the adverse impacts of the project to existing wetland functions and values. Significant attention is given to forested wetland systems and seagrass beds, which are difficult to mitigate.
- The cumulative impacts of concurrent and future road improvement projects in the vicinity of the subject project should also be addressed.

Additional Comments (optional):
In general, DEP recommends that transportation improvements projects not infringe upon environmentally sensitive areas such as flood zones, rare or endangered species' habitats, wetlands, or natural drainage courses. Such lands should be preserved for their environmental and aesthetic significance. The Blackwater River - designated Special Outstanding Florida Waters and Surface Water Improvement and Management (SWIM) priority waters - flows into the Yellow River Marsh Aquatic Preserve and Class II shellfish harvesting waters. The designations thus reflected in Chapters 253, 258, 373, and 403, F.S., afford the highest level of state protection to the Blackwater River and the downstream estuarine system of Blackwater Bay and East Bay.

Coordinator Feedback: None

3 ETAT Review by Randy Turner, US Army Corps of Engineers (12/24/2009)
Wetlands Effect: Moderate

Coordination Document: No Selection

Identified Resources and Level of Importance:
A review of GIS data provided in the screening tool indicates approximately 33.1 acres of NWI Palustrine wetlands and 0.7 acres of the Blackwater River exist within the 100-foot buffer. The wetlands appear to be high quality. The subject wetlands play a vital role for flood storage, water quality issues, and drainage for the surrounding areas. A functional analysis would determine the extent of their value.

Comments on Effects to Resources:
Alternative 2 provides the second least overall impacts to jurisdictional waters of the United States and is more favorable to the purpose and need of the project and the geographical areas the corridor is intended to service than any of the other alternatives. Direct impacts would include the elimination of functions and values of the wetlands within the roadway footprint, any disturbed buffer, and create secondary effects along adjacent waters/buffer.

Coordinator Feedback: None

4 ETAT Review by Leigh Brooks, Northwest Florida Water Management District (01/29/2010)

Wetlands Effect: Substantial

Coordination Document: No Selection

Identified Resources and Level of Importance:
Analysis provided shows that within a 500-foot buffer there are 118 acres of wetlands as determined by FDEP 2004 Land Use and Land Cover data (identified by DOT as NWFWMD Wetlands 2004) and 168 acres of NWI wetlands, mostly palustrine with some riverine wetlands. Adding water to FDEP Wetlands 2004 to provide a more direct comparison with NWI acreage results in 125 acres of wetlands and water. Roughly 16 percent of the corridor is wetlands. Alternative 2 has the least wetland acreage impact of the six alternatives.

The corridor lies in the Gulf Coastal Lowlands and Western Highlands physiographic provinces and the Southern Pine Plains and Hills ecoregion. The corridor goes through a wetland designated as critical habitat for the reticulated flatwoods salamander (Ambystoma bishop), a federally listed endangered species. White-top pitcherplant (Sarracenia leucophylla) and Curtiss' sandgrass (Calamovilfa curtissii), state-endangered and state-threatened wetland plants respectively, occur within 600 feet of the corridor, and there is potential for them to occur within the corridor. Current land use according to 2004 FDEP Land Use and Land Cover is primarily upland and wetland mixed forest, forest regeneration areas, coniferous plantations, shrub and brushland, electrical power transmission lines, and mixed rangeland. Land cover is mostly wooded. This corridor is tangent to an undeveloped public parcel encompassing a portion of Clear Creek managed as part of the Blackwater Heritage State Trail.

Comments on Effects to Resources:
New roadway construction would have direct impacts to environmentally sensitive wetlands. Potential indirect impacts include sedimentation, nonpoint source pollution, and hydrologic alternation. Impacts to riverine and palustrine habitats may be expected as a result of direct and indirect impacts.

Additional Comments (optional):
Considering the data provided as well as internal data and analysis, all of the proposed alternatives would have substantial impacts to water resources. The apparent least adverse impact would occur under Alternative 1, followed by Alternative 2. Alternatives 3, 4, 5 and 6 have greater wetland impacts, infringe on protected conservation lands, and have greater potential secondary and cumulative impacts. Alternative 3 has the greatest impact to floodplains, and Alternatives 4, 5 and 6 are more vulnerable to storm surges. Alternative 2 presents a concern due to alignment along a steeply sloped, erosion-prone valley wall and proximity to a stream.

Early interagency planning and coordination of wetland mitigation alternatives are required in accordance with Section 373.4137, Florida Statutes. Advance consultation and consensus between the District and FDOT are required.

Coordinator Feedback: None

4 ETAT Review by Mary Mittiga, US Fish and Wildlife Service (01/22/2010)

Wetlands Effect: Substantial

Coordination Document: To Be Determined: Further Coordination Required

Identified Resources and Level of Importance:

Water resources within the proposed corridor include the Blackwater River, its floodplain, and potentially high quality wetland communities. The Blackwater River is designated as an Outstanding Florida Water and is included in Critical Habitat Unit 4 - the Yellow River System - for the federally threatened Gulf sturgeon. The Blackwater River drains to Blackwater Bay, part of the Yellow River Marsh Aquatic Preserve. Wetlands may include areas of cypress/gum swamp, pitcher plant prairie, and wet pine flatwoods. A known historic breeding pond for the endangered reticulated flatwoods salamander (Ambystoma bishopi) vegetated with pond cypress and slash pine is located on private property adjacent to Corridors 1-3. This pond and its associated uplands are designated as Critical Habitat Unit RFS-2, Subunit A (162 acres).

Comments on Effects to Resources:
The Blackwater River, its tributaries, floodplain, and associated wetlands provide habitat for a large number of fish and wildlife species including federally protected species. The Service recommends implementing measures to protect fish and wildlife resources from potential impacts resulting from the proposed project. Direct impacts may include, but are not limited to, stream diversion or culverting, wetland fill, erosion, siltation, and loss of shoreline vegetation. Indirect impacts may include introduction of exotic species adapted to colonizing disturbed areas, fragmentation of contiguous habitats, altered hydrology, increases in stormwater discharge, altered patterns of sediment erosion and deposition, increased impervious surface area, and additional disturbance in newly opened areas.

Impacts to wetlands and waterbodies can be minimized in a number of ways. Avoidance is often the most effective measure to reduce impacts; it can be accomplished either by locating the route to circumvent the most valuable resources or by reducing the project footprint. Unavoidable impacts can be minimized by adjusting the design of bridges or culverts. The Service recommends using fluvial geomorphology analyses to design crossing structures that permit normal bedload movement, a low flow channel to allow fish passage and preserve water quality, and additional culverts installed above bankfull level to maintain the hydrologic regime of floodplain areas. These measures may also result in a reduction of blowout events and maintenance requirements. Measures should be implemented to minimize any hydrologic alteration to surrounding wetlands, especially to habitat used by the flatwoods salamander. Information should be provided on Best Management Practices (BMPs) to prevent degradation of aquatic resources from erosion, siltation, and nutrient discharges associated with the project site. Specialized measures may be required to prevent inadvertent impacts to high quality wetlands and designated critical habitat units.

After all efforts have been taken to avoid and minimize impacts to wetlands and other waters of the United States, mitigation measures should be implemented to replace the areal extent as well as the functions and values of the aquatic resources that would be impacted. Suitable mitigation measures include wetland restoration or enhancement, culvert/bridge design measures to enhance fish and wildlife movement at crossings, stream restoration measures such as replacing riprap with biotechnical erosion controls, or restoring suitable meander geometry. Land acquisition and mitigation opportunities proximate to the project impacts may be the best options to offset wetland functional losses.

Coordinator Feedback: None

- No review submitted from the Federal Highway Administration

Wildlife and Habitat

Coordinator Summary

4 Summary Degree of Effect

Wildlife and Habitat Summary Degree of Effect: Substantial

Reviewed By:
FDOT District 3 (4/21/2010)
Comments:
The Florida Department of Transportation (FDOT) has evaluated comments from the Naval Air Station Whiting Field, US Fish and Wildlife and the FL Fish and Wildlife Conservation Commission and recommends a Degree of Effect of Substantial.

FDOT understands the Naval Air Station's (Whiting Field) concern over the potential for increased bird animal strike hazard for Alternative 2 because NASWF aircraft fly entry and exit routes along the SR 87/89 Corridor. If this Alternative is chosen, it is understood mitigation strategies may need to be taken like minimizing stormwater retention to 48 hours, bird monitoring, and/or mowing schedules updates to reduce bird animal strike hazards.

The US Fish and Wildlife Service commented that all six alternatives cross critical habitat for the threatened Gulf Sturgeon (Acipenser oxyrinchus desotoi). Alternatives 1-3 cross 0.9 miles upstream of Cooper Basin, an area where fish congregate while Alternatives 4-6 cross the Blackwater River south of Milton, where fish are not known to congregate. Also, Alternatives 1-3 may impact flatwoods salamander habitat while all alternatives cross waters that are accessible to the federally endangered West Indian manatee (manatus latirostris). In addition, there is potential for the endangered red-cockaded woodpecker (RCW) (Picoides borealis) to occur along the proposed roadway where suitable habitat is present. The Department understands the importance of protecting the above species and their habitat. We have taken note of the proposed impact minimization techniques the US Fish and Wildlife Service listed in their comments. These include measures to protect the Gulf Sturgeon, including limiting in-water work activities when Gulf Sturgeon are present to the extent practicable, as well as using appropriate Standard Manatee Construction Conditions if they are found to be in the project area. In addition, the assessment of critical habitat for the flatwoods salamander and the RCW will be completed as suggested in the comments. Finally, the Department understands that new roadways may affect migrating animals and potentially costly measures such as designing bridges to span riverine floodplains and preserving wide riparian buffers should be reviewed and considered when prioritizing the alternatives.

The Florida Fish and Wildlife Conservation Commission (FWC) completed a 500 ft GIS analysis of the 6 Alternatives within the 4 corridors. The results of the analysis indicated that all six Alternative Corridors can be considered moderately to mostly rural in nature, as High and Low Impact Urban Lands vary from a low of only 79.0 acres for Alignment 3 to a high of 208.2 acres along Alignment 6. Wetlands along the Alignments vary from a low of 143.1 acres for Alignment 2, to a high of 256.3 acres for Alignment 6. Upland forests range from a low of 318.3 acres for Alignment 5 to a high of 763.8 acres along Alignment 3. The wetlands are predominately characterized by freshwater marsh, cypress swamp, bay swamp, hardwood swamp, mixed wetland forest, and open water, while uplands are represented by upland hardwood forest, mixed hardwood-pine forests, pinelands, longleaf pine-turkey oak sandhills, and shrub and brushland. Based on known range and preferred habitat type, the following species listed by FWC as Endangered (E), Threatened (T), or Species of Special Concern (SSC) may occur and be impacted: gopher tortoise (T), Eastern indigo snake (T), Florida pine snake (SSC), gopher frog (SSC), pine barrens treefrog (SSC), snowy egret (SSC), little blue heron (SSC), tricolored heron (SSC), white ibis (SSC), wood stork (E), Southeastern American kestrel (T), red-cockaded woodpecker (SSC), Gulf sturgeon (SSC), blackmouth shiner (E), and possibly the eastern chipmunk (SSC) and Florida black bear (T). In addition, we understand FWCs concern that all six Alternatives could adversely impact good to high quality upland and wetland habitat as indicated by scores of 6 to 7 or 6 to 8 (10 = high, 0 = Low) on FWC's Integrated Wildlife Habitat Ranking System map. We will investigate the location of Priority Wetlands and Biodiversity Hotspots as outlined by FWC utilizing the FWC GIS Shapefiles to ensure minimal impact while offering the public a safe new transportation corridor. Priority Wetlands for Wetland Dependent Listed Species are capable of supporting 1 to 3 focal species in uplands, and 1 to 3 focal species in wetlands. In addition, high quality areas of upland and wetland habitat that have been designated by FWC as Biodiversity Hotspots can support 3 to 4, 5 to 6, and 6 to 7 or more focal species; and are within regional areas officially designated as consultation areas for the listed Gulf Sturgeon, and the red-cockaded woodpecker. In addition, FDOT's environmental research will

include habitat location assessments for the other species FWC notes in their comments as species of conservation need: eastern cottontail rabbit, northern red-headed woodpecker, hairy woodpecker, bobwhite, southeastern fox squirrel, spotted skunk, striped skunk, southern hognose snake, alligator snapping turtle, Gulf coast box turtle, Escambia map turtle, Gulf coast smooth softshell turtle, carpenter frog, Florida bog frog, seal salamander, bald eagle, peregrine falcon, loggerhead shrike, brown headed nuthatch, ironcolor shiner, speckled darter, and southern starhead topminnow. Another comment made by FWC was concern that all of the alternatives have the potential to impact the Blackwater River Heritage State Trail, the Coldwater Creek Preserve, the Blackwater River State Forest, the Black Water River Water Management Area, and the lands of the Naval Air Station at Whiting Field. With the exception of the Heritage Trail, we believe that we may be able to avoid these properties utilizing FWCs GIS shapefiles and Santa Rosa County's Parcel data to locate them. In addition, the Heritage Trail, if impacted, will be incorporated into the roadway cross section to ensure its location is not dramatically shifted from its existing position along the historic railroad alignment. Finally, we understand and will consider the comment that Alternatives 2 and 3 will diminish the conservation value of the proposed acquisition lands for the Clear Creek/Whiting Field Florida Forever Project and may facilitate growth in proximity to the Naval Air Station, impacting fish and wildlife habitat and reducing their land manager's ability to use prescribed burning to enhance conservation lands during our Alternative Corridor selection process.

In addition, we will review the following Best Management Practices (BMPs) during this PD&E Study listed by FWC as we determine which Alternative will effectively provide a new transportation corridor, while causing the least amount of negative environmental and social impacts. The BMPs include the review of the existing corridor for potential improvements to minimize impacts, development of a vegetative cover map to be used to mitigate habitat loss, assurance that mitigation sites are in the same regional area, coordination with FWC on listed species surveys, inclusion of design options that include spanning streambeds and wetland floodplain areas where possible, and inclusion of drainage design options to reduce the need for offsite Drainage Retention Areas.

No Comments were received from the Federal Highway Administration (FHWA) or the US Forest Service.

ETAT Reviews for Wildlife and Habitat

4 ETAT Review by Scott Sanders, FL Fish and Wildlife Conservation Commission (01/19/2010)
Wildlife and Habitat Effect: Substantial

Coordination Document: To Be Determined: Further Coordination Required

Identified Resources and Level of Importance:
The Habitat Conservation Scientific Services Section of the Florida Fish and Wildlife Conservation Commission (FWC) has coordinated an agency review of ETDM #12597, Santa Rosa County, and provides the following comments related to potential effects to fish and wildlife resources on this Programming Phase project.

The Project Description Summary states that this project involves a Project Development and Environment (PD&E) Study to evaluate the potential for providing a new roadway corridor to serve as the missing link or bypass for connecting SR-87 South and SR-87 North as an Alternative to the existing shared facility of SR-87 South to SR-87 North via US-90, a portion of which runs through the Town of Milton, and is currently operating at a failing Level of Service (LOS F). According to information provided by the Florida Department of Transportation's (FDOT's) consultant, the No-build Alternative, and the Transportation System Alternative that involves improvements to intersections for traffic flow and safety and other measures along the existing Alignment will necessarily involve work in the downtown Historic District of Milton where Right-of-way expansion is problematic. However, since the existing SR-87 Alignment was not provided on the Environmental Screening Tool as one of the project options, we are unable to provide an assessment and

comparison of fish and wildlife resource and habitat impacts together with the following four new corridors and six Alterative Alignments that have been identified for evaluation for improved mobility and safety on the project in the PD&E Study:

1. Corridor 1 (Alternative 1) extends from the existing intersection of US-90 and SR-87 South crossing the Blackwater River near the existing eastern power line easement; then continues to follow the power easement and connects to SR-87 North near the southern split of SR-87 North and SR-89, for a total length of about 6.5 miles.

2. Corridor 2 (Alternative 2) also runs to the north from the US-90 and SR-87 South intersection and crosses the Blackwater River near the easternmost power line crossing easement, and then runs just to the north of Corridor 1 adjacent to the Clear Water Creek environmental lands. This proposed route of about 7.2 miles then runs west to connect to SR-87 North near the northern split of SR-87 North and SR-89.

3. Corridor 3 (Alternative 3), which is about 10.5 miles in length, also runs to the north from the US-90 and SR-87 South intersection and crosses the Blackwater River near the easternmost power line crossing easement, then extends north on the east side of Whiting Field, possibly using portions of the Pat Brown Road Right-of-way (ROW). North of Whiting Field, the corridor will attempt to pass through a narrow gap between the Nature Conservancy and Florida Forever Lands, and Whiting Field, at a location where it can intersect SR-87 North, south of Southridge Road and north of Whiting Field.

4. Corridor 4 (Alternatives 4, 5, & 6) will evaluate areas to the south of US-90, which will involve a new crossing of the Blackwater River between Bagdad and Milton. The southern corridor will generally head west from SR-87 South, sharing a portion of US-90 ROW that will be expanded, and connect to SR-87 North at the intersection of US-90 and SR-87 North. The western end of this corridor near SR-87 North will utilize the ROW of the Blackwater Heritage Trail, and incorporate the trail in the roadway cross section. This corridor is approximately 5.6 to 6.5 miles long.

A GIS analysis within 500 feet of each of the six Alternative Alignments 1, 2, 3, 4, 5, and 6 within Corridors 1, 2, 3, and 4 was accomplished; and Table 1 provides the acreage of native upland forests and forested and herbaceous wetland plant community types, along with man-altered land use types that include Agricultural lands and High and Low Impact Urban lands. The results of our analysis indicates that all six Alternative Alignments can be considered moderately to mostly rural in nature, as High and Low Impact Urban Lands vary from a low of only 79.0 acres for Alignment 3 to a high of 208.2 acres along Alignment 6. Wetlands along the Alignments vary from a low of 143.1 acres for Alignment 2, to a high of 256.3 acres for Alignment 6. Upland forests range from a low of 318.3 acres for Alignment 5 to a high of 763.8 acres along Alignment 3.

According to our assessment of all six Alternatives, wetlands are predominately characterized by freshwater marsh, cypress swamp, bay swamp, hardwood swamp, mixed wetland forest, and open water, while uplands are represented by upland hardwood forest, mixed hardwood-pine forests, pinelands, longleaf pine-turkey oak sandhills, and shrub and brushland. Man-altered land use types include High and Low Impact Urban lands, and Agricultural lands. Based on known range and preferred habitat type, the following species listed by our agency as Endangered (E), Threatened (T), or Species of Special Concern (SSC) may occur and be impacted directly by loss or degradation of habitat within the project area Right-of-way (ROW), or indirectly due to associated residential or commercial development within the adjacent regional area: gopher tortoise (T), Eastern indigo snake (T), Florida pine snake (SSC), gopher frog (SSC), pine barrens treefrog (SSC), snowy egret (SSC), little blue heron (SSC), tricolored heron (SSC), white ibis (SSC), wood stork (E), Southeastern American kestrel (T), red-cockaded woodpecker (SSC), Gulf sturgeon (SSC), blackmouth shiner (E), and possibly the eastern chipmunk (SSC) and Florida black bear (T).

The following wildlife species that may occur in and adjacent to the project area, while not officially listed, are considered by our agency as species of greatest conservation need due to long-term and

chronic habitat loss: eastern cottontail rabbit, northern red-headed woodpecker, hairy woodpecker, bobwhite, southeastern fox squirrel, spotted skunk, striped skunk, southern hognose snake, alligator snapping turtle, Gulf coast box turtle, Escambia map turtle, Gulf coast smooth softshell turtle, carpenter frog, Florida bog frog, seal salamander, bald eagle, peregrine falcon, loggerhead shrike, brown headed nuthatch, ironcolor shiner, speckled darter, and southern starhead topminnow.

Furthermore, our analysis included an overall accounting, provided in Table 2, which includes a comparison of the potential for impacts or possible adverse interaction for all six Alternative Alignments with important and sensitive ecological features in the regional study area. Overall, our screening shows that all new Alignments have the potential for at least moderately high to substantial adverse effects on fish and wildlife and habitat resources. First, based on the information provided in the project description, all new Alignments would require construction of a new bridge across the Blackwater River and floodplain. Second, all six Alignments could adversely impact good to high quality upland and wetland habitat as indicated by scores of 6 to 7 or 6 to 8 (10 = high, 0 = Low) on FWC's Integrated Wildlife Habitat Ranking System map; impact areas designated by our agency as Priority Wetlands for Wetland Dependent Listed Species, which are capable of supporting 1 to 3 focal species in uplands, and 1 to 3 focal species in wetlands; impact high quality areas of upland and wetland habitat that have been designated by FWC as Biodiversity Hotspots that can support 3 to 4, 5 to 6, and 6 to 7 or more focal species; and are within regional areas officially designated as consultation areas for the listed Gulf sturgeon, and the red-cockaded woodpecker. Furthermore, all Alignments could impact the Blackwater and Yellow Rivers and other streams which support listed and rare fish species, while some of these Alignments could in addition adversely affect Clear Creek and Pond Creek. Finally, all Alignments could impact the Blackwater River Heritage State Trail, while other Alignments in varying degrees could adversely impact the Coldwater Creek Preserve, Blackwater River State Forest, Black Water River Water Management Area, and the lands of the Naval Air Station at Whiting Field.

Comments on Effects to Resources:
Direct effects of the project could be substantial for all Alignments. Our analysis shows that all new Alignments have the potential for the direct loss of high quality and productive upland, wetland, and riverine habitat and will, to some degree, adversely impact public conservation lands by clearing within the ROW footprint, interchanges, and the construction of Drainage Retention Areas (DRAs).

Indirect effects could also be substantial since these new Alignments would cause detrimental habitat fragmentation and isolation of wetland and upland habitat; and result in impacts to a moderate number of listed species by decreased habitat connectivity and increased mortality through roadkills. Increased stormwater runoff could also degrade aquatic and wetland habitat by reduced water quality and through increased turbidity. Long-term Impacts from increased commercial and residential development could be encouraged and facilitated by the project and naturally follow the new roadway, causing significant loss and degradation of habitat, as could the construction of new secondary roads to connect with the new bypass. Public lands could be indirectly impacted by increased noise, artificial lighting, and possibly the reduced ability to perform prescribed burning necessary to maintain appropriate habitat conditions because of liability and concern for public safety due to smoke drift to the new roadway.

Additional Comments (optional):
The following recommendations and Best Management Practices (BMPs) are offered for consideration in future planning efforts so that adequate funding can be justified for the PD&E study to design the project in a manner to avoid, minimize, or mitigate project effects to wildlife species and their habitat:

1. The Project Description defines the No-Build Alternative and the Transportation System Management (TSM) Alternative along the existing alignment, in addition to the new Bypass Alternatives, as viable parts of the total project to be addressed in the PD&E Study. The TSM Alternative along the existing Alignment appears to have potential for the least impacts to fish and wildlife and habitat resources. If improvement of the existing Alignment is found not to be a viable

option after further study, we recommend a concerted effort during the PD&E Study Phase to avoid, minimize or properly mitigate impacts to the fish and wildlife and habitat resources we have detailed in our assessment above.

2. A vegetative cover map and accounting by acreage for each plant community type should be made for the affected project area. Compensatory mitigation for all upland and wetland habitat loss should be accomplished. If wetlands are mitigated under the provisions of Chapter 373.4137 F.S., the proposed mitigation sites should be located within the immediate or same regional area; be functionally equivalent; equal to or of higher functional value; and as or more productive as the impacted wetlands. Land acquisition and restoration of appropriate tracts adjacent to existing public lands, or other tracts placed under conservation easement or located adjacent to large areas of jurisdictional wetlands that currently serve as regional core habitat areas, would be supported by our agency. An important focus of the selection process for mitigation lands for this project should include a strong consideration of, and habitat replacement for the listed and non-listed birds, mammals, amphibians, reptiles, and fish that are discussed above as potentially occurring in the project area.

3. Surveys for listed species should be accomplished within and adjacent to the ROW of all Alignments and proposed sites for DRAs. The methodology for these surveys should be coordinated with FWC early in the PD&E Study and follow appropriate survey techniques or guidelines to determine presence, absence, or probability of occurrence of various species, and to assess habitat quality. These study methods should be designed considering the potential listed species discussed above. Please note that some species are known to use atypical habitat types and transitional habitat areas; therefore, due diligence and thorough coverage during field investigations are key to adequately determining presence or absence of all species. Based on the survey results, a plan should be developed to address direct, indirect, and cumulative effects of the project on wildlife and habitat resources, including listed species, and other important species we have included above. Avoidance, minimization, and mitigation measures should also be formulated and implemented. Permits may be needed from the FWC for impacts to the gopher tortoise, and possibly other listed species; and due diligence and coordination with FWC is recommended.

4. We strongly recommend that all new bridges over streams, and in particular the Blackwater River, be constructed to span completely the streambed and wetland floodplain along with the upland transitional area. We also recommend that FDOT develop and implement customized BMPs especially formulated for this project as they pertain to dredging and filling, control of siltation and turbidity, and the nutrient loading associated with discharge of roadside runoff, to reduce effects within freshwater basin wetlands and riparian systems. The PD&E Study should address the potential for treating roadside runoff within the median and roadside swales to reduce the need for offsite Drainage Retention Areas and avoid habitat loss. Appropriately designed fencing should also be erected within rural habitat areas to reduce roadkills, and improve public safety. The design of this fence should include smaller mesh at ground level to preclude access onto the roadway by various mammals, amphibians and reptiles. Our biologists are available to provide input on appropriate fence design.

5. Construction equipment staging areas; storage of oils, greases, and fuel; fill and roadbed material; and equipment maintenance activities should be sited in previously disturbed areas far removed from streams, wetlands, or surface water bodies. Staging areas, along with borrow areas, should also be surveyed for listed species. Close coordination with federal, state and local permitting agencies is recommended.

We appreciate the opportunity to provide input on highway design and the conservation of fish and wildlife resources. Please contact Terry Gilbert at (850) 402-6311 or email terry_gilbert@urscorp.com to initiate the process for further overall coordination on this project.

Coordinator Feedback: None

2 ETAT Review by Randy Roy, Naval Air Station Whiting Field (02/14/2010)

Wildlife and Habitat Effect: Minimal

Coordination Document: To Be Determined: Further Coordination Required

Identified Resources and Level of Importance:
Alternative 2 may have minimal to moderate impact on Naval Air Station Whiting Field's mission.

Comments on Effects to Resources:
Potential for increased Bird Animal Strike Hazards. Retention pond development to support project alternatives - Possible measures/mitigation strategies to consider would be to minimize storm water retention to 48-hours, provide active bird monitoring, and implement mowing schedules (Bird Animal Strike Hazard concerns). NASWF mission aircraft routinely fly entry and exit routes along/adjacent the 87/89 corridor.

Coordinator Feedback: None

4 ETAT Review by Mary Mittiga, US Fish and Wildlife Service (01/22/2010)

Wildlife and Habitat Effect: Substantial

Coordination Document: To Be Determined: Further Coordination Required

Identified Resources and Level of Importance:
Federally Protected Species
Federally listed threatened and endangered species may occur along the proposed alignment. All six corridors cross critical habitat for the threatened Gulf sturgeon (Acipenser oxyrinchus desotoi). The Blackwater River from its confluence with Big Coldwater Creek downstream to its discharge into Blackwater Bay is included within Critical Habitat Unit 4 - the Yellow River System. Corridors 1-3 cross the Blackwater River approximately 0.9 mile upstream of Cooper Basin, an area where numerous fish congregate for summer resting and staging. Sturgeon occurrence drops significantly upstream of Cooper Basin at the proposed crossing. Corridors 4-6 cross the Blackwater River just south of Milton. While fish migrate through this area, it is not a known major congregation site.

Corridors 1, 2, and 3 may impact Critical Habitat Unit RFS-2, subunit A, for the endangered reticulated flatwoods salamander. Threats to this unit from the proposed corridor include potential urban development, potential hydrologic alterations to the habitat, and the potential for fire suppression.

The proposed project includes work in waters accessible to the federally endangered West Indian manatee (Trichechus manatus latirostris), an occasional, warm month visitor to the panhandle.

There is potential for the endangered red-cockaded woodpecker (RCW) (Picoides borealis) to occur along the proposed roadway where suitable habitat is present.

Other Fish and Wildlife Resources
The Blackwater River, its tributaries, floodplain, and associated wetlands provide habitat for a large number of fish and wildlife species. Much of the Blackwater River floodplain ranks as Priority 1 (highest) and 2 conservation areas for rare species using the Florida Natural Areas Inventory (FNAI)

Habitat Conservation Priorities Geographic Information System data layer. Corridors 2 and 3 will cross proposed acquisition lands for the Clear Creek/Whiting Field Florida Forever project. Corridor 3 will cross the Phase I project between Whiting Field Naval Air Station and a 1,400-acre block of conservation lands to the northeast acquired under Florida Forever in 2009. Corridor 2 will cross proposed acquisition lands for Phase II of the project to the southwest of Whiting Field. The purpose of these conservation lands is to create a conservation land buffer to the Naval Air Station, protect surrounding water bodies, and allow for expanded recreation opportunities for the State of Florida.

Comments on Effects to Resources:
Federally Protected Species
A complete description and map of Critical Habitat Unit 4 are given in the Designation of Critical Habitat for the Gulf Sturgeon Final Rule available on the internet at http://alabama.fws.gov/gs/. Measures to protect the Gulf sturgeon should be incorporated in your project plans, and should include construction constraints to avoid and minimize effects to the sturgeon, their riverine habitat, and the primary constituent elements (PCEs) of sturgeon critical habitat essential to their conservation. In-water work activities should be avoided to the extent practicable during periods when Gulf sturgeon are present in their riverine habitat.

Measures to avoid and minimize impacts to reticulated flatwoods salamander critical habitat should be included in your project plans. Affects to the PCEs of critical habitat should be specifically assessed. Information on PCEs is available in the Designation of Critical Habitat for Frosted Flatwoods Salamander and Reticulated Flatwoods Salamander Final Rule at: http://www.fws.gov/panamacity/species/pdf/FlatwoodsSalamander.pdf . Your review should address direct, secondary, and cumulative effects to both the wetland and upland components of critical habitat. Examples of indirect effects include hydrologic alteration, reduced ability to manage property by prescribed burning, spread of exotic nuisance species, and roadkill.

We recommend including appropriate Standard Manatee Construction Conditions for your project to provide protection measures for the manatee.

For the RCW, if work impacts pine stands 30 years of age the stand should be surveyed for RCW. No other records for federally listed species were identified with the FNAI database. However, we assume that listed species occur in suitable ecological communities. Site surveys should be made to determine the presence or absence of listed species whenever suitable habitat is present.

Other Fish and Wildlife Resources
During this early phase of project development, the Service recommends implementing measures to protect fish and wildlife resources from potential impacts resulting from the proposed project. Corridors 2 and 3 will diminish the conservation value of the proposed acquisition lands for the Clear Creek/Whiting Field Florida Forever Project. Corridors 2 and 3 may facilitate growth in proximity to the Naval Air Station, impacting fish and wildlife habitat and reducing their land manager's ability to use prescribed burning to enhance conservation lands.

All the new corridors will result in further fragmentation of the regional landscape. Increasing fragmentation is correlated with isolated, less stable wildlife populations, particularly for small mammals. Roads form a barrier for taxa that are sensitive to surface microclimate changes (temperature, moisture, chemistry), and may detrimentally affect groups such as reptiles and amphibians which migrate annually to breeding sites. The Florida black bear and other wide-ranging species are especially vulnerable to roadkill because of frequent road crossing. Some measures which help maintain habitat linkage include designing bridges to span the riverine floodplain, preserving wide riparian buffers, and/or adding multi-species wildlife. These costs should also be incorporated in the project's cost-benefit analysis.

Degradation of adjacent habitat is a secondary effect of the proposed roadway, especially for migratory birds. Many migratory bird species prefer "deep woods" and require land tracts with low edge:area ratios. Increasing fragmentation results in smaller islands of habitat, favoring species

adaptable to woodland edges. Mitigation costs for secondary effects in these habitats should be considered.

Coordinator Feedback: None

- No review submitted from the Federal Highway Administration

ETAT Reviews: Cultural

Historic and Archaeological Sites

Coordinator Summary

3 Summary Degree of Effect

Historic and Archaeological Sites Summary Degree of Effect: Moderate

Reviewed By:
FDOT District 3 (4/21/2010)
Comments:
The Florida Department of Transportation (FDOT) has reviewed the comments submitted by the Federal Highway Administration (FHWA), the Florida Department of State, and the Miccosukee Tribe of Indians of Florida, and recommends a Degree of Effect of Moderate.

The FDOT is aware of Historic State Road 1 that parallels US 90. The design for a possible crossing will include measures to address this historic facility. Likewise, as part of this Study the Department will be performing a CRAS to identify and evaluate any cultural resources that might be affected by this project.

No comments were received from the Seminole Tribe of Florida.

ETAT Reviews for Historic and Archaeological Sites

2 ETAT Review by Steve Terry, Miccosukee Tribe of Indians of Florida (01/19/2010)

Historic and Archaeological Sites Effect: Minimal

Coordination Document: No Selection

Identified Resources and Level of Importance:
There are no recorded archaeological sites reported near this project. However, a Cultural Resources Survey will need to be done to ascertain if there are any archaeological sites within the project boundaries.

Comments on Effects to Resources:
Once a Cultural Resources Survey has been done, then effects, if any, to archaeological sites can be ascertained.

Additional Comments (optional):

If the Cultural Resources Survey shows there are no archaeological sites that will be impacted by this project, then no further consultation is necessary. However, if the Cultural Resources Survey does show that archaeological sites will be impacted by this project, then further consultation with the Miccosukee Tribe should be done.

Coordinator Feedback: None

3 ETAT Review by Alyssa McManus, FL Department of State (01/25/2010)

Historic and Archaeological Sites Effect: Moderate

Coordination Document: No Selection

Identified Resources and Level of Importance:
There are few identified resources located within the Alternative 1 project corridor. There are two standing structures, SR1095 and SR1208, within the 500 ft boundary of this project cooridor. Neither of these buildings appears to have been evaluated. There is one National Register- listed site, which is Florida State Road No. 1, 8SR1313, located within the 100 ft boundary of this project corridor. This is also the only resource group identified within this buffer.

In 1929, Florida State Road 1 became part of the federal highway system and officially became US 90. It was listed in the NRHP in 2002. Careful consideration should be taken to determine if this project will adversely affect this resource.

Comments on Effects to Resources:
The lack of identified cultural resources most probably reflects the lack of any formal CRAS for this project corridor. Also, it is unknown what impact this project will have on State Road 1. For this reason, we are recommending that a CRAS be performed to identify and evaluate any cultural resources that might be affected by this project.

Coordinator Feedback: None

3 ETAT Review by Cathy Kendall, Federal Highway Administration (04/08/2010)

Historic and Archaeological Sites Effect: Moderate

Coordination Document:PD&E Support Document As Per PD&E Manual

Identified Resources and Level of Importance:
Alternatives 1, 2 and 3 may have fewer impacts for historic resources than alternatives 4-6. Alternatives 1-3 have a potentially historic structure located within 500 feet of the proposed road improvement. Alternatives 4-6 have a potentially historic structure within 200 feet of the proposed improvement. Alternatives 4-6 also have a potentially significant archaeological site (lumber mill) located within 100 feet. Alternatives 4-6 also have a potentially historic bridge located within 500 feet.

All alternatives potentially impact SR 1, an NRHP resource known as Red Brick Road.

Alternative 4 goes through a portion of the town of Milton, and would potentially impact historic

structures that have not yet been identified.

Comments on Effects to Resources:
Impacts to known historic sites should be avoided. A CRAS will determine the significance of the known as well as the yet to be identified historic properties. Of all the alternatives, Alternative 4 may have the most impacts to historic resources. This will need to be verified with the CRAS.

Coordinator Feedback: None

- No review submitted from the Seminole Tribe of Florida

Recreation Areas

Coordinator Summary

4 Summary Degree of Effect

Recreation Areas Summary Degree of Effect: Substantial

Reviewed By:
FDOT District 3 (4/21/2010)
Comments:
The Florida Department of Transportation (FDOT) has reviewed the comments submitted by the Florida Department of Environmental Protection (FDEP) and the US Enviromental Protection Agency (EPA), and recommends a Degree of Effect of Substantial.

The FDOT is aware Alternative 2 will need to cross the Blackwater Heritage State Trail. As such, coordination and mitigation as necessary will be pursued with OGT, the Board of Trustees of the Internal Improvement Trust Fund, or any other Governing Board.

In addition, FDOT is aware that Alternative 2 traverses lands that are planned for purchase as part of the The Clear Creek/Whiting Field Florida Forever BOT Project. Should this alternative be selected, the location and design efforts will be closely coordinated with the Naval Air Station, BOT, and Santa Rosa County to ensure minimal impacts to the project.

No Comments were received from the Federal Highway Administration (FHWA) or the National Park Service.

ETAT Reviews for Recreation Areas

3 ETAT Review by Madolyn Dominy, US Environmental Protection Agency (01/29/2010)

Recreation Areas Effect: Moderate

Coordination Document: No Selection

Identified Resources and Level of Importance:
Resources: Recreation Areas - recreational trails, conservation lands, wildlife management areas, Florida Forever BOT Projects, Florida Managed Areas, Greenways and Trails, Public Parks, etc.

Level of Importance: These recreational areas are of a high level of importance in the State of Florida. A moderate degree of effect is being assigned to this issue for the proposed project Alternative 2 (ETDM #12597, SR 87 Connector).

Comments on Effects to Resources:
The alignment for Alternative 2 is within close proximity to the Blackwater Heritage State Trail and the Clear Creek/Whiting Field Florida Forever BOT Project.

The Blackwater Heritage State Trail is part of Florida's System of Greenways and Trails. It is the State's westernmost rail trail and runs from Milton to Whiting Field Naval Air Station. The trail could be directly and indirectly impacted by the roadway project.

The Clear Creek/Whiting Field Florida Forever BOT Project is also within the proposed Alternative 2 alignment. Florida Forever Board of Trustees (BOT) projects are lands that have been proposed for acquisition because of outstanding natural resources, opportunity for natural resource-based recreation, or historical and archaeological resources. Portions of these projects may have already been acquired by the State and/or its acquisition partners. The Clear Creek/Whiting Field Florida Forever BOT project is one of the top projects on the 'A' priority list. The project helps to create a conservation land buffer to Naval Air Station Whiting Field which will protect surrounding water bodies and allowing for expanded recreation opportunities. The Clear Creek/Whiting Field Florida Forever BOT project connects to a portion of the Blackwater River State Forest, one of the state's largest natural areas, and provides habitat for many endangered and threatened plants and animals, including gopher tortoises, southeastern weasel, white-topped pitcher plant, spoon-leaved sundew, panhandle lily and the hairy-peduncled beakrush. Located near Milton in Santa Rosa County, the majority of the project consists of upland pine forests, sand hills, and mature and young pine plantations.

EPA is assigning a moderate degree of effect to this issue due to the fact that the roadway could impact these recreation areas. Also, resulting development in the corridor would have significant indirect and cumulative impacts on these types of resources. FDOT should evaluate direct, indirect, and cumulative impacts to recreation areas features such as the one listed and any other public or private parks within the vicinity. The PD&E study should include a survey of the area to identify if any recreation areas which would require a Section 4(f) review are present in the project area. Opportunities to avoid and or minimize impacts and fragmentation to recreational resources should be evaluated and considered to the greatest extent practicable.

Coordinator Feedback: None

4 ETAT Review by Lauren P. Milligan, FL Department of Environmental Protection (01/29/2010)
Recreation Areas Effect: Substantial

Coordination Document: To Be Determined: Further Coordination Required

Identified Resources and Level of Importance:
Alternative 2 crosses the Blackwater Heritage State Trail and Clear Creek/Whiting Field Florida Forever BOT Project.

Comments on Effects to Resources:
These lands contain significant natural communities and numerous element occurrences of listed species, as indicated by the Florida Natural Areas Inventory. The Department is interested in preserving the area's natural communities, wildlife corridor functions, natural flood control,

stormwater runoff filtering capabilities, aquifer recharge potential, and recreational trail opportunities. Therefore, future environmental documentation should include an evaluation of the primary, secondary, and cumulative impacts of roadway construction on the above public lands and proposed acquisition sites.

Additional Comments (optional):
Under Article X, Section 18 of the Florida Constitution (as amended in 1998), dispositions of state-owned conservation lands are restricted to those lands "no longer needed for conservation purposes." If the proposed highway connector construction activities necessitate right-of-way creation within these state and water management district lands, the applicant will need to request that the Board of Trustees of the Internal Improvement Trust Fund or Northwest Florida Water Management District Governing Board determine whether the subject properties are no longer needed for conservation purposes. This requirement must be met before the conveyance of these lands can proceed. In addition, please be advised that proposals to utilize state conservation lands may be required to meet the guidelines of the state's linear facility policy, POLICY Use of Natural Resource Lands by Linear Facilities As Approved By Board of Trustees of the Internal Improvement Trust Fund on January 23, 1996.

Coordinator Feedback: None

- No review submitted from the Federal Highway Administration
- No review submitted from the National Park Service

Section 4(f) Potential

Coordinator Summary

3 Summary Degree of Effect

Section 4(f) Potential Summary Degree of Effect: Moderate

Reviewed By:
FDOT District 3 (4/21/2010)
Comments:
The Florida Department of Transportation (FDOT) has reviewed the comments from the Federal Highway Administration (FHWA) and recommends a Degree of Effect of Moderate.

As outlined in the FHWA comments, the SR 1 Red Brick Road (Trail) historic site, and the Blackwater River Heritage Trail will be crossed with this corridor. As such, in conjunction with the CRAS that will be prepared for this Study a determination of applicability will be needed to determine if the facilities are Section 4(f)resources.

ETAT Reviews for Section 4(f) Potential

3 ETAT Review by Cathy Kendall, Federal Highway Administration (04/08/2010)

Section 4(f) Potential Effect: Moderate

Coordination Document:PD&E Support Document As Per PD&E Manual

Identified Resources and Level of Importance:
Alternatives 3-6 have potential impacts to recreational lands or lands used as a wildlife refuge, that may be protected under Section 4(f).

All alternatives have potential to affect historic resources that may be protected under Section 4(f). The extent of these potential historic resources for each alternative are described below (as previously stated in comments for historic resources). Alternatives 4-6, however, appear to have greater potential to impact historic resources, which may be protected under Section 4(f)

Alternatives 1, 2 and 3 may have fewer impacts for historic resources than alternatives 4-6. Alternatives 1-3 have a potentially historic structure located within 500 feet of the proposed road improvement. Alternatives 4-6 have a potentially historic structure within 200 feet of the proposed improvement. Alternatives 4-6 also have a potentially significant archaeological site (lumber mill) located within 100 feet. Alternatives 4-6 also have a potentially historic bridge located within 500 feet.

All alternatives potentially impact SR 1, an NRHP resource known as Red Brick Road.

Alternative 4 goes through a portion of the town of Milton, and would potentially impact historic structures that have not yet been identified.

Comments on Effects to Resources:
Impacts to known parks, recreation and wildlife refuge areas and historic sites protected under Section 4(f) should be avoided. A CRAS will determine the significance of the known as well as the yet to be identified historic properties. Of all the alternatives, Alternative 4 may have the most impacts to historic resources. This will need to be verified with the CRAS. A determination of applicability will be needed to determine if each park, recreation area or wildlife refuge area is, in fact, a Section 4(f) resource.

Coordinator Feedback: None

ETAT Reviews: Community

Aesthetics

Coordinator Summary

2 Summary Degree of Effect

Aesthetics Summary Degree of Effect: Minimal

Reviewed By:
FDOT District 3 (4/21/2010)
Comments:
The Florida Department of Transportation (FDOT) recommends a Degree of Effect of Minimal for aesthetics.

The majority of land within the project area is agriculture with a few residential homes dispursed in the area. The proposed roadway improvements should not significantly alter any viewsheds or vistas, but may contribute to changing the rural character of the area. However, the Blackwater River is an established

aesthetic feature in the project area. The proposed river crossing is to co-locate with a major power transmission line that crosses the river. Therefore, the Alternative crosses the river in an area that already has a significant disruption to the view sheds.

During the Project Development and Environment (PD&E) Study, a noise evaluation will be conducted. In addition, input from the public will be solicited on potential project effects on community aesthetics. The FDOT will consider incorporating aesthetic enhancements such as landscaping, into project design plans. Coordination with the community will occur throughout the PD&E Study.

No comments were received from the Federal Highway Administration (FHWA), the Florida-Alabama Transportation Planning Organization (TPO).

ETAT Reviews for Aesthetics

No reviews found for the Aesthetics Issue.
- No review submitted from the Federal Highway Administration

Economic

Coordinator Summary

1 Summary Degree of Effect

Economic Summary Degree of Effect: Enhanced

Reviewed By:
FDOT District 3 (4/20/2010)
Comments:
The Florida Department of Transportation (FDOT) recommends a Degree of Effect of Enhanced for economic.

Access to intermodal facilities and movement of goods and freight are also important considerations in the development of an effective transportation system. This is an enhancement provided with this Alternative by providing a link from northern areas of the County to areas in the southern end of the County. In addition it would establish the needed SIS link between Whiting Field and I-10 and the SR 87S SIS facility. The Santa Rosa County Aviation Industrial Park will also be provided improved access to the SIS facilities to the south.

The bicycle and pedestrian enhancements and improvements proposed along the new facility would increase safety, pedestrian mobility, connectivity between residential and nonresidential areas, and would provide access for transportation disadvantaged populations. As a result of the proposed improvements, property values for commercial uses within the County that benefit from this Alternative are likely to increase along with the County's tax base.

The FDOT will conduct public outreach to residents and businesses in the area to solicit input on the project, particularly concerning access. The FDOT will also develop and maintain channels of communication between the proposed subdivision developers, the City of Milton and Santa Rosa County officials, and the NASWF concerning the proposed project, including notifying them of upcoming public meetings.

No comments were received from the Federal Highway Administration (FHWA), and the Florida-Alabama Transportation Planning Organization (TPO).

ETAT Reviews for Economic

No reviews found for the Economic Issue.
- No review submitted from the FL Department of Economic Opportunity
- No review submitted from the Federal Highway Administration

Land Use

Coordinator Summary

2 Summary Degree of Effect

Land Use Summary Degree of Effect: Minimal

Reviewed By:
FDOT District 3 (4/21/2010)
Comments:
The Florida Department of Transportation has reviewed the comments submitted by the Florida Department of Community Affairs (DCA), and the Naval Air Station Whiting Field (NASWF), and recommends a Degree of Effect of Minimal.

Through consultation with Santa Rosa County Land Use staff, it was confirmed that the County's Map 4-3 "Needs Not Cost Feasible with Existing Resources," modified November 2008, the project is identified and it was on the previous Map 4-4 "Not Cost Feasible with Existing Revenue Sources," dated April 2002. Only one general alignment was shown which is similar to the general alignment in the TPO's Long Range Transportation Plan. The map does not, however, show the alternative alignments because they are determined through the corridor analysis and PD&E study. One will be selected as the preferred alignment, and it will go into the Comprehensive Plan. It will remain on the "Not Cost Feasible" map until we can show construction is cost feasible.

In addition, funding for this project is on Table 10-1 of the Schedule of Capital Improvements, page 10-13 of the Comprehensive Plan. It was $490,000 in FY 09, a federal earmark. The description is not more specific because we generally use the language of the earmark itself; however, we can be more specific in the future. This PD&E study is actually funded by three earmarks with the $490,000 as the second earmark. The first was originally appropriated in FY 07, so it is not shown in the Schedule of Capital Improvements, since it was outside the five-year window of the schedule: FY 08 - FY 12. The third was $475,000 appropriated for FY 10, which should be added to the Comprehensive Plan. No funding has been identified for the further phases of final design, right-of-way, or construction. But, this is typical of most projects. It is very rare that a project is funded through all phases at one time. The funding that we knew of at the time is in the Schedule of Capital Improvements. All earmark funds have been in the TIP and STIP.

The County also believes that if an alternative is not found to the existing roadways, sprawl will extend even further beyond the study area, congestion will worsen on US 90/SR 87 and job growth in particular in the East Milton industrial area will halt. The County's Comprehensive Plan also provides guidance on development around the military base, but application of the land development code (LDC) further defines, for instance, protections for military airport zones (MAZs). In the LDC, some types of development are compatible with air operations, such as industrial development. The County is building an aviation industrial park adjacent to NAS Whiting Field, made possible by an agreement with the Navy.

Santa Rosa County is nationally known for its cooperation with the Navy to achieve goals of both the County and the military. So, at the very general level of the Comprehensive Plan, a project may appear to be inconsistent, but in fact stronger protections exist such as in the LDC.

The project is also in the Florida - Alabama Transportation Planning Organization (TPO)'s 2025 Long Range Transportation Plan Cost Feasible Plan, adopted in Dec 2005.

The Federal Highway Administration (FHWA) did not provide comments.

ETAT Reviews for Land Use

3 ETAT Review by Gary Donaldson, FL Department of Community Affairs (03/02/2010)
Land Use Effect: Moderate

Coordination Document: No Selection

Identified Resources and Level of Importance:
Consistency review for proposed State Road 87 Connector project

Reviewed for consistency with the Santa Rosa County Comprehensive Plan and the City of Milton Comprehensive Plan

The State Road 87 Connector ETDM project is a proposed new roadway in Santa Rosa County which consists of six alignment alternatives associated with this review. The project is intended to provide an alternative to the existing shared facility of State Road 87 and US 90 which currently operates at a failing level of service. The indicated need for a new corridor is to provide additional capacity and improve regional connectivity.

Alternatives 1, 2 and 3 identify alternative connections to State Road 87 and US 90, which are located northeast of the City of Milton. Alternatives 2 and 3 traverse areas adjacent to Florida Forever lands. Alternatives 4, 5 and 6 connect State Road 87 to US 90 south of the City of Milton crossing the Blackwater River. The alternatives south of Milton are intended to route traffic around the City of Milton Historic District.

A portion of State Road 87 is identified in the Santa Rosa Comprehensive Plan 2008-2025 Comprehensive Plan Capital Improvements Element as a Federal earmark multi-laning project. However, the Element does not reference project boundaries associated with this specific improvement. The ETDM Project Description does not identify a funding source for this project.

None of the project alternatives are identified on Map 4-3 of the Santa Rosa County 2020 Future Transportation Map and none are identified on Map A of the City of Milton Future Transportation Map.

The State Road 87 Connector project (including its alternatives) is not consistent with the comprehensive plans of Santa Rosa County or the City of Milton for the following reasons:

(1) It is not specifically identified in the Santa Rosa County or the City of Milton Comprehensive Plans.
(2) It is not identified on the Future Transportation Maps of Santa Rosa County or the City of Milton.
(3) It is not specifically identified in the Five-Year Capital Improvement Schedule of Santa Rosa County and the City of Milton.
(4) It is inconsistent with Policy 8.1.D.6 of the Conservation Element of the Santa Rosa County Comprehensive Plan, which states that new public infrastructure should not be planned where development may be promoted in environmentally sensitive lands.
(5) It is inconsistent with Objective 3.3A of the Future Land Use Element of the Santa Rosa County Comprehensive Plan, which requires that future development within adopted Military Airport Zones (MAZs) not negatively impact current and long term viable use of airfields by limiting incompatible land uses.

The project should be modified to be consistent with the policies identified above and the local government comprehensive plans should be revised to include this project before it advances into the FDOT Five Year Work program.

Staff review of the project addressed the following concerns:

Land use --
Alternatives 1, 2, and 3 of the State Road 87 Connector project are located to the northeast of the City of Milton and connect through land designated as "Agriculture (AG)" on Map 3-1 of the Santa Rosa County Future Land Use Map. Construction of a roadway along these corridors has the potential to promote urban sprawl, based on the definitions in Rules 9J-5.003(134) and 9J-5.006(5), F.A.C.
(134) "Urban sprawl" means urban development or uses which are located in predominantly rural areas, or rural areas interspersed with generally low-intensity or low-density urban uses, and which are characterized by one or more of the following conditions: (a) The premature or poorly planned conversion of rural land to other uses; (b) The creation of areas of urban development or uses which are not functionally related to land uses which predominate the adjacent area; or (c) The creation of areas of urban development or uses which fail to maximize the use of existing public facilities or the use of areas within which public services are currently provided. Urban sprawl is typically manifested in one or more of the following land use or development patterns: Leapfrog or scattered development; ribbon or strip commercial or other development; or large expanses of predominantly low-intensity, low-density, or single-use development.

The information provided in the ETDM Project Description is insufficient to determine the impacts of the project on urban sprawl or greenhouse gas emmissions. The project has been discussed with Santa Rosa County planning staff who indicated that the selected alignment alternative is intended to be constructed as a limited access roadway. If so, contribution to urban sprawl and greenhouse gas emissions may be mitigated, depending on usage and access characteristics.

Objective 3.1.A of the Santa Rosa County Comprehensive Plan Future Land Use Element requires future land uses to be coordinated in order to ensure the protection of natural resources and with the availability of adequate infrastructure, the reduction of greenhouse gas emmissions. Alternatives 1,2, and 3 connect through agricultural, single family residential, industrial and conservation/recreation land uses. While Alternatives 4, 5 and 6 maximize the use of existing roadway infrastructure as identified in the ETDM Project Description, Alternatives 1,2 and 3 as described may not protect natural resources and reduce greenhouse gas emissions.

The portions of alternatives traversing through the City of Milton connect through commercial uses as identified on the City Future Land Use Map. The City of Milton Comprehensive Plan does not contain policies within its plan that address the reduction of greenhouse gas emmissions.

Transportation --
The ETDM Purpose and Need Statement identifies State Road 87 as a vital evacuation route for Gulf Breeze and Navarre residents to travel northbound. State Road 87 is also identified as a hurricane evacuation route on Map 4-2 Santa Rosa Future Transportation Map 2025. However, the current route connects using a congested portion of US 90 through the City of Milton downtown section.

The project is identified in the MPO 2020 Cost Feasible Plan as a Project Development and Environment Study (PD& E) consisting of preliminary design phases. The roadway corridor selected will be a two-lane facility with right-of way acquired for a four lane facility. No funding sources have currently been identified for the project. Further, the anticipated residential and business growth of Santa Rosa County emphasizes the need for an improved roadway network which will better facilitate traffic along the existing corridor.

Conservation -
Policy 8.1.D.6 of the Santa Rosa County Comprehensive Plan Conservation Element requires that

new public infrastructure be compatible with future and existing land uses and should not promote increased development located in environmentally sensitive lands. The proposed roadway alternatives located to the north and east of the City of Milton (Alternatives 1, 2 and 3) are located in agriculturally designated areas on the Santa Rosa County Future Land Use Map. Portions of the roadway alternatives are also located close to the Clear Creek/Whiting Field Florida Forever Project Boundary. Construction of a new roadway through and around areas designated for conservation has the potential to jeopardize environmental resources located in and around the Florida Forever project Boundary and surrounding agricultural areas. The project is therefore inconsistent with Santa Rosa Comprehensive Plan Policy 8.1.D.6.

Military Facility-
Objective 3.3.A of the Santa Rosa County Comprehensive Plan Future Land Use Element requires that future development within adopted Military Airport Zones (MAZs) and Public Airport Zones (PAZs) not negatively impact current and long term viable use of the airfield by limiting incompatible land uses. Portions of the proposed location of roadway Alternatives 1, 2 and 3 are located within, or near the Airport Zones identified on Map 3-18 of the Future Land Use Map Series (NAS Whiting Field Military Airport Zone (MAZ) Map) contained within the Santa Rosa County Comprehensive Plan. The map identifies Accident Potential Zones within the MAZ boundaries. Accident Potential Zones refer to areas with a greater potential for accidents to occur around airport facilities.

Alternatives 2 and 3 of this project are inconsistent with Objective 3.3.A of the Santa Rosa County Comprehensive Plan and Map 3-18 of the Santa Rosa County Future Land Use Map Series (NAS Whiting Field Military Facility) because of safety concerns involving the potentially adverse impacts of new roadway construction and vehicle traffic passing through Airport Zone boundaries around the existing military facility. Alternative 1 is located near the Airport Zone, but is located outside of the Airport Zone boundary.

Comments on Effects to Resources:
see above

Coordinator Feedback: None

2 ETAT Review by Randy Roy, Naval Air Station Whiting Field (02/14/2010)
Land Use Effect: Minimal

Coordination Document: To Be Determined: Further Coordination Required

Identified Resources and Level of Importance:
Alternative 2 may have minimal to moderate impact on Naval Air Station Whiting Field's mission.

Comments on Effects to Resources:
Possible increase in development immediately adjacent Naval Air Station Whiting Field (NASWF). Though existing zoning regulations and an approved Joint Land Use Study are in place to protect the installation from incompatible development, it is important to highlight potential consequences with development trends adjacent project area. Detailed maps and land development code can be reference and included in the assessment (references are located on the Santa Rosa County Planning and Zoning website.

NASWF has two multi-year agreements to acquire conservation lands and properties adjacent the installation. The goal is to partner with county and state to conserve environmentally sensitive lands and buffer the installation's mission from incompatible development. Alternative 2 could have

potential impacts due to acquired conservation lands located immediately south of NASWF. Encourage study incorporate language/maps identifying these targeted areas of concern and their potential impacts on the planning/alternative selection. The specifics in regards to these on-going conservation efforts are listed in the Florida Forever project list (Clear Creek I, Clear Creek II, and a potential add-on project called Wolfe Creek Forest). Santa Rosa County and NAS Whiting Field have also partnered in developing an Area of Concern Map (available via the SRC Planning and Zoning website).

Coordinator Feedback: None

- No review submitted from the FL Department of Economic Opportunity
- No review submitted from the Federal Highway Administration

Mobility

Coordinator Summary

1 Summary Degree of Effect

Mobility Summary Degree of Effect: Enhanced

Reviewed By:
FDOT District 3 (4/21/2010)
Comments:
The FDOT agrees with the Florida Department of Environmental Protection and recommends a Degree of Effect of Enhanced.

This project will not only improve mobility for motoring traffic, but it will also enhance bicycle and pedestrian travel by providing an improved and expanded network.

The Federal Highway Administration (FHWA) and the Federal Transit Administration did not provide comments.

ETAT Reviews for Mobility

1 ETAT Review by Lauren P. Milligan, FL Department of Environmental Protection (01/29/2010)

Mobility Effect: Enhanced

Coordination Document: To Be Determined: Further Coordination Required

Identified Resources and Level of Importance:
The project provides connectivity between several "High" Multi-Use Trail Priority Corridors: the Blackwater Heritage Trail, the Highway 191 (Munson Highway) Corridor and the Whiting Bike Trail Corridor. Alternative 1 crosses the Blackwater Heritage Trail; Alternative 3 is in close proximity to the Naval Air Station at Whiting Field, the Coldwater Creek Florida Forever Project and the proposed Blackwater Heritage State Trail Extension; and multiple alternatives cross the Florida National Scenic Trail. Steps should be taken to ensure the protection and enhancement of the existing trails. Inclusion of a multi-use trail facility within the entire project area could enhance connectivity between the various existing and future trail systems, alleviate traffic and enhance mobility while enhancing

alternate forms of transportation. Location of the road alignment could, however, make access difficult for trail users. Future adjacent development could affect the trail by generating increased vehicular traffic. Enhancements to alternate transportation and trail safety would occur if a grade separated crossing (for the trail) is included with the roadway design. Coordination is recommended to ensure that impacts to the trail are given due consideration and that they can benefit the multiple uses of the trail.

Comments on Effects to Resources:
Since 1995, the Florida Department of Environmental Protection's Office of Greenways & Trails (OGT) has been working with the University of Florida to identify the best opportunities to protect ecological connectivity statewide. To that end, the Florida Ecological Greenways Network (Network) was developed through a decision support model and collaborative process involving technical input from the Florida Greenways Commission, the Florida Greenways Coordinating Council, state, regional and federal agencies, scientists, conservation groups, planners and the general public. Since its legislative adoption in 1999, the Network has been prioritized to rank all areas into classes based upon value for ecological connectivity. The Ecological Linkages represent areas that are most important to protect because of their ability to connect existing ecological hubs and because of the potential threats of development.

The proposed project is in an area that has been identified as a Critical Ecological Linkage within Florida. Because of the long range potential for this area to serve as an ecological connector for protection of wildlife, OGT staff suggests that appropriate steps be considered as part of the project. Underpasses or other steps may be appropriate in order to maintain or establish habitat connectivity and a safe path for wildlife.

For further information and assistance, please contact Ms. Robin Turner at (850) 245-2909.

Coordinator Feedback: None

- No review submitted from the Federal Highway Administration
- No review submitted from the Federal Transit Administration

Relocation

Coordinator Summary

2 Summary Degree of Effect

Relocation Summary Degree of Effect: Minimal

Reviewed By:
FDOT District 3 (4/21/2010)
Comments:
The Florida Department of Transportation (FDOT) recommends a Degree of Effect of Minimal for relocation.

Additional ROW will be required to accommodate the improvements and associated ponds. There are a few residences within the 200-foot buffer distance that may be effected as the Alternative appoaches SR 87N.

Potential residential, business, and public facility relocations will be analyzed in detail throughout the Project Development and Environment (PD&E) Study. Depending on the project alignment and alternative selected, there is a potential for displacement of residences. Relocation efforts will be further analyzed as more detailed project information and ROW needs become available. Relocations should be minimized and any

identified historic residences located along the project should be avoided where reasonable and feasible. Any potential relocation should be evaluated to ensure that there are no disproportionate adverse impacts to any distinct minority, ethnic, elderly, or handicapped groups and/or low-income households.

This project will be developed in accordance with the Civil Rights Act of 1964, as amended by the Civil Rights Act of 1968. Along with Title VI of the Civil Rights Act, Executive Order 12898 (Environmental Justice) which ensures that minority and/or low-income households are neither disproportionably adversely impacted by major transportation projects, nor denied reasonable access to them by excessive costs or physical barriers (Environmental Protection Agency [EPA], 1994).

No comments were received from the Federal Highway Administration (FHWA), or the Florida-Alabama Transportation Planning Organization (TPO).

ETAT Reviews for Relocation

No reviews found for the Relocation Issue.
- No review submitted from the Federal Highway Administration

Social

Coordinator Summary

3 Summary Degree of Effect

Social Summary Degree of Effect: Moderate

Reviewed By:
FDOT District 3 (4/21/2010)
Comments:
The Florida Department of Transportation (FDOT) has reviewed the comments made by the US Environmental Protection Agency (EPA) and recommends a Degree of Effect of Moderate. The FL Department of Community Affairs had no comments.

The DOT agrees with EPA's assessment that there will be social benefits from this project. However, the FDOT understands there may be issues associated with the effects caused from a new roadway facility. To address those issues, the project team will be utilizing an on-going public involvement program throughout the PD&E Study.

The Federal Highway Administration (FHWA) did not comment.

ETAT Reviews for Social

0 ETAT Review by Gary Donaldson, FL Department of Community Affairs (03/02/2010)

Social Effect: None

Coordination Document: No Selection

Identified Resources and Level of Importance:
Social impacts cannot be determined for the project at this time.

Comments on Effects to Resources:

None found.

Coordinator Feedback: None

3 ETAT Review by Madolyn Dominy, US Environmental Protection Agency (02/01/2010)
Social Effect: Moderate

Coordination Document: No Selection

Identified Resources and Level of Importance:
Resources: Social impacts to features such as residential populations, residential communities, commercial businesses, social service facilities, minority or low-income populations, disadvantaged populations, archeological and historic areas or structures, etc.

Level of Importance: These resources are of a high level of importance. Impacts to these types of resources, both positive and negative, should be evaluated and documented in the PD&E phase of the project. A moderate degree of effect is being assigned to this issue for the SR 87 Alternatives.

Comments on Effects to Resources:
According to the project description, the primary need for this new corridor is to provide additional capacity, and to improve regional connectivity by providing a more direct route from areas of high growth in northern Santa Rosa County, such as the Berryhill Road area, to I-10 and to areas further to the south. Likewise, access will be improved to and from I-10 for the Whiting Field U.S. Naval Air Station, and the County's Joint Use Planning Area near Whiting Field. It is also anticipated that this new facility would provide relief to Ward Basin Road and its intersection with US 90. It is also intended to provide much needed relief to the US 90 Blackwater Bridge.

Santa Rosa County has been experiencing considerable growth over the past year, and has grown in its own right, but also as a bedroom community to the greater Pensacola area. This growth has spurred the need for an improved roadway network. In addition, there are several major traffic generators within the US 90 corridor area, such as new residential developments, the Santa Rosa Criminal Justice Center, the Santa Rosa Corrections Facility, Whiting Field U.S. Naval Air Station, Team Rosa Joint Planning area near Whiting Field, and the Santa Rosa Commerce Park, which would all benefit from the capacity this facility will provide. The need for the project is also related to committed trips associated with future development in the northern portions of Santa Rosa County, as well as, the future development along the US 90 corridor, which is hindered by the existing capacity limits of US 90. Santa Rosa County has grown 173% since 1980 and is expected to grow another 92% by 2030. This increase will put further demand on the US 90/SR 87 segment, making growth and evacuation difficult due to a lack of capacity.

EPA is assigning a moderate degree of effect to this issue. There will be social benefits resulting from the project due to congestion relief and an improvement in mobility with the new SR 87 Connector project. However, there are several social issues to be considered. The project should take into account various social issues and impacts for each of the Alternatives. These issues may include, but are not limited to, population and growth estimates, community cohesion, noise, vibration, visual aesthetics, environmental justice issues, low income populations, elderly populations, economic development, land acquisition, displacements or relocations, effects on special populations, archeological and historic areas or structures, and other social features that may be affected by the project.

These issues should be evaluated and addressed during the PD&E phase of the project. EPA

recommends that any negative direct and indirect impacts to social resources and affected communities be avoided or minimized to the best extent practicable. Public involvement on this project should be ongoing and continual throughout the project.

EPA recommends that a Sociocultural Effects (SCE) Evaluation be considered as detailed in the FDOT document entitled Sociocultural Effects in ETDM. This document outlines the importance of evaluating sociocultural effects throughout the transportation planning and development process. An SCE Evaluation is used to assess community impacts utilizing both quantitative and qualitative methods. The SCE Evaluation should be based on the best available data and provide for adequate public involvement and outreach activities.

Some of the issues to be considered when conducting an SCE Evaluation include: social consequences to surrounding or interconnected communities; demographics of affected community; displacement of population; increase/decrease of population as a result of the project; displacement of minority populations; and disproportionate effects on special populations. The particular types of social issues that are important for this proposed project should be evaluated.

Coordinator Feedback: None

- No review submitted from the Federal Highway Administration

ETAT Reviews: Secondary and Cumulative

Secondary and Cumulative Effects

Coordinator Summary

4 Summary Degree of Effect

Secondary and Cumulative Effects Summary Degree of Effect: Substantial

Reviewed By:
FDOT District 3 (4/21/2010)
Comments:
The Florida Department of Transportation (FDOT) has evaluated comments from the US Fish and Wildlife Service (USFWS), and the Northwest Florida Water Management District (NWFWMD) and recommends a Degree of Effect of Substantial.

The FDOT, in conjunction with the Federal Highway Administration (FHWA), will be facilitating a task force to evaluate and provide guidance on Indirect (Secondary) and Cumulative Effects. This task force consists of representatives from the FHWA, the FDOT, various agencies, and regional planning councils. The output of this task force will be guidance in the form of a White Paper along with possible revisions to the Environmental Screening Tool (EST) to facilitate Indirect and Cumulative Effects Analysis. A Cumulative Effects Evaluation will also be conducted as part of the Project Development and Environment (PD&E) Study.

ETAT Reviews for Secondary and Cumulative Effects

4 ETAT Review by Mary Mittiga, US Fish and Wildlife Service (01/22/2010)
Secondary and Cumulative Effects Effect: Substantial

Coordination Document: To Be Determined: Further Coordination Required

At-Risk Resource: Wildlife and Habitat

Comments on Effects:
The secondary effects of a new road alignment will extend outward from the roadway for variable distances, depending on the nature of the effect. Examples of secondary effects to wildlife and habitat include: transport of particulate and chemical materials, such as sediment, mineral nutrients, and heavy metals; micro-climate changes; roadkill; roadside maintenance activities; traffic noise; traffic vibration; the attraction effect of light; hydrological alterations; habitat fragmentation; disruption of wildlife movement corridors; increased human access; new development with habitat loss, and the spread of invasive, non-native plant species. A new roadway will provide access for development into adjoining natural lands which provide habitat for numerous wildlife species. Corridors 2 and 3 may result in additional development near to Naval Air Station Whiting Field, impacting land manager's ability to implement prescribed burning for habitat improvement. Due to recent rapid coastal development in Florida and throughout the U.S., the secondary and cumulative effects of new growth associated with the corridor should be evaluated.

Recommended Avoidance, Minimization, and Mitigation Measures:
The following measures are recommended to avoid and minimize secondary and cumulative impacts to wildlife and habitat:
Environmentally-sensitive bridge construction should be used.
Post-project monitoring should occur regularly to determine identify and control invasive, non-native species.
Water quality protection measures to Environmental Resource Permitting (ERP) standards or better should be in place within these high quality undeveloped watersheds.
Specific water quality protection Best Management Practices (BMPs) should be developed to avoid and minimize potential effects to designated critical habitat for the Gulf sturgeon and reticulated flatwoods salamander.

Recommended Actions to Improve At-Risk Resources:
None found.

At-Risk Resource: Wetlands

Comments on Effects:
The secondary effects of a new road alignment will extend outward from the roadway for variable distances, depending on the nature of the effect. Examples of secondary effects to wetlands include: transport of particulate and chemical materials, such as sediment, mineral nutrients, and heavy metals; micro-climate changes; roadside maintenance activities; hydrological alterations; increased human access; new development, and the spread of invasive, non-native plant species. A new roadway can provide access for development into adjoining natural/open lands, of which much are wetlands. Due to the recent rapid coastal development in Florida and throughout the U.S., the secondary and cumulative effects of new growth associated with the corridor should be evaluated.

Recommended Avoidance, Minimization, and Mitigation Measures:
Other measures to avoid and minimize impacts to wetlands include: post-project monitoring to identify and control invasive, non-native species; additional culverts to maintain hydrologic connections between wetlands; environmentally sensitive bridge construction; and water quality protection measures.

Recommended Actions to Improve At-Risk Resources:
None found.

Coordinator Feedback: None

4 ETAT Review by Leigh Brooks, Northwest Florida Water Management District (01/29/2010)
Secondary and Cumulative Effects Effect: Substantial

Coordination Document: To Be Determined: Further Coordination Required

At-Risk Resource: Water Quality and Quantity

Comments on Effects:
Existence of the new roadway could lead to development of undeveloped proximate areas, particularly approaching SR 87 North. Conversion of the natural landscape that reduces vegetation, exposes bare soil, and alters surface hydrology would degrade water quality.

Incremental and interactive effects on wetland and floodplain resources, water quality, and associated sensitive terrestrial and aquatic habitats can be expected. These changes may reduce the quality of remaining resources and cause further wetland impacts, fragmentation, hydrologic alteration, and associated impacts to water quality and habitats.
Impacts from development associated with this corridor present less of a concern because there are

suitable upland areas for development, however development will increase impervious surface and could increase stormwater runoff, diminishing water quality.

Recommended Avoidance, Minimization, and Mitigation Measures:
Minimizing the total project footprint, especially in sensitive areas, combined with strict stormwater controls will help minimize impacts to water quality. Impacts to wetlands and surface hydrology could be minimized this way as well, and more so by raising the roadway over wetlands and flood hazard areas in the form of a viaduct or extended elevated bridge, allowing for free movement of plants, animals and water and maintaining the natural water quality benefits provided by these lands.

Recommended Actions to Improve At-Risk Resources:
- Plan stormwater treatment and management to provide for protection of both flows and water quality, and identify and implement opportunities for retrofit.
- Carefully examine and resolve any existing issues with drainage related impacts.
- Develop a detailed plan of best management practices encompassing both construction and facility design. These should be designed to protect against nonpoint source pollution (both long-term and during construction), prevent offsite wetland and water quality impacts, and maintain hydrologic connectivity.
- Protect wetland systems and functions, including isolated wetlands.
- Conduct early consultation with the District to develop wetland mitigation alternatives.
- Plan stream and bank protection measures so as to protect and/or restore riparian habitat the full width of the natural floodplain.
- Incorporate extended bridging in areas important to hydrologic and habitat connectivity.
- Minimize the total footprint of the project.
- Minimize the effective impervious area.
- Conduct advance planning with local governments and state agencies to prevent adverse cumulative impacts associated with anticipated and spin-off development.

At-Risk Resource: Wetlands

Comments on Effects:
The overall and long-term cumulative effects of the proposed roadway include direct project impacts and related development along with incremental and interactive effects from anticipated and spin off development to wetland and floodplain resources, water quality, and associated sensitive terrestrial and aquatic habitats. These changes will reduce the quality of remaining resources and cause

further wetland impacts, fragmentation, hydrologic alteration, and associated impacts to water quality and habitats.

Impacts from development associated with this corridor present less of a concern because there are suitable upland areas for development.

Recommended Avoidance, Minimization, and Mitigation Measures:
Early interagency planning and coordination of wetland mitigation alternatives are required in accordance with Section 373.4137, Florida Statutes.

Work with local government to discourage development activities adjacent to environmentally sensitive water resources. Determine the future land uses for currently undeveloped regions and design roadway infrastructure and mitigation measures to accommodate associated development activities.

Minimize the project footprint; use extended bridges in areas important to hydrologic and habitat connectivity.

Recommended Actions to Improve At-Risk Resources:
- Follow the process for mitigation of wetland impacts required under s. 373.4137, F.S. Initiate coordination with the District as soon as possible.
- Develop a detailed plan of best management practices encompassing both construction and facility design. These should be designed to maintain hydrologic connectivity and to prevent nonpoint source pollution (both long-term and during construction), offsite wetland and water quality impacts, and habitat fragmentation.
- Protect wetland systems and functions, including isolated wetlands.
- Carefully examine and resolve any existing issues with drainage related impacts.
- Plan stream and bank protection measures so as to protect and/or restore riparian habitat the full width of the natural floodplain.
- Incorporate extended bridging in areas important to hydrologic and habitat connectivity.
- Minimize the project footprint.
- Minimize the effective impervious area.
- Conduct advance planning with local governments and state agencies to prevent adverse cumulative impacts associated with anticipated and spin-off development.

Coordinator Feedback: None

Eliminated Alternatives

Alternative #3 - Eliminated

- **Date Updated:** 10/12/2011
- **Updated By:** FDOT District 3
- **Justification for Elimination:**
  Corridor 3
  Per the Federal Highway Administration's (FHWA) determination dated August 8, 2011: "Alternative 3A has been considered for elimination from further analysis. Documentation of recent State purchase of properties within the Alternative 3 corridor support elimination from further analysis. Confirmation that standard Navy covenants over the purchased property will not be modified to allow the proposed road project also supports elimination of Alternative 3A from further analysis.

  The purchase of a property by the State does not specifically remove an alternative from consideration for use. Use of a resource designated as 4(f) property may not be approved unless there is no feasible and prudent avoidance alternative and the action includes all possible planning to minimize harm to the property resulting from the proposed use. It should also be noted that resources along Alternative 3A will likely be afforded Section 4(f) protection and the process to acquire rights of way from State lands with this designation is particularly arduous. Given the apparent viable alternatives that exist, Alternative 1 and Alternative 2, which do not have these identified constraints it is reasonable that Alternative 3A be removed from requiring further analysis. If Alternatives 1 or 2 have equal or nearly equal constraints which need to be considered then further analysis of the Alternative 3A corridor may be required."

Alternative #4 - Eliminated

- **Date Updated:** 10/13/2011
- **Updated By:** FDOT District 3
- **Justification for Elimination:**
  Corridor 4
  Per the Federal Highway Administration's (FHWA) determination dated July 26, 2011: "Multiple State and Federal ETAT members identified alternatives 4, 5, and 6 as having substantial affects on water quality, wetlands, wildlife and habitat, historical sites, recreational areas, parks, and floodplains. These affects are counter to State and Federal responsibility to avoid and minimize impacts to natural resources within this interconnected, ecologically important, highly productive, and protected area proposed project corridor.

  Effects on wetlands and potential for secondary and cumulative effects were identified as topics of potential dispute by Northwest Florida Water Management District. Their dispute justification is as follows. "The proposed use is incompatible with the purpose for which District lands were acquired under the Florida Preservation 2000 program with public funds of the Florida Preservation 2000 Trust Fund, such purpose to protect valuable natural resources. (Florida Preservation 2000 Act: Florida Statute 259.101(7). "

  Additionally, alternatives 4, 5, and 6 provide only marginal improvements to providing "a more direct route from areas of high growth in northern Santa Rosa County to I-10" and improved access to I-10 from Whiting Field US Naval Air Station.

  Based on the combination of identified land use, public funds invested to support that use, and other reasons it is reasonable that Alternatives 4, 5, and 6 do not require further analysis given the apparent viable alternatives exist which do not have these constraints."

Alternative #5 - Eliminated

- **Date Updated:** 10/13/2011
- **Updated By:** FDOT District 3
- **Justification for Elimination:**
  Corridor 5
  Per the Federal Highway Administration's (FHWA) determination dated July 26, 2011: "Multiple State and Federal ETAT members identified alternatives 4, 5, and 6 as having substantial affects on water quality, wetlands, wildlife and habitat, historical sites, recreational areas, parks, and floodplains. These affects are counter to State and Federal responsibility to avoid and minimize impacts to natural resources within this interconnected, ecologically important, highly productive, and protected area proposed project corridor.

  Effects on wetlands and potential for secondary and cumulative effects were identified as topics of potential dispute by Northwest Florida Water Management District. Their dispute justification is as follows. "The proposed use is incompatible with the purpose for which District lands were acquired under the Florida Preservation 2000 program with public funds of the Florida Preservation 2000 Trust Fund, such purpose to protect valuable natural resources. (Florida Preservation 2000 Act: Florida Statute 259.101(7). "

  Additionally, alternatives 4, 5, and 6 provide only marginal improvements to providing "a more direct route from areas of high growth in northern Santa Rosa County to I-10" and improved access to I-10 from Whiting Field US Naval Air Station.

  Based on the combination of identified land use, public funds invested to support that use, and other reasons it is reasonable that Alternatives 4, 5, and 6 do not require further analysis given the apparent viable alternatives exist which do not have these constraints."

Alternative #6 - Eliminated

- **Date Updated:** 10/13/2011
- **Updated By:** FDOT District 3
- **Justification for Elimination:**
  Corridor 6
  Per the Federal Highway Administration's (FHWA) determination dated July 26, 2011: "Multiple State and Federal ETAT members identified alternatives 4, 5, and 6 as having substantial affects on water quality, wetlands, wildlife and habitat, historical sites, recreational areas, parks, and floodplains. These affects are counter to State and Federal responsibility to avoid and minimize impacts to natural resources within this interconnected, ecologically important, highly productive, and protected area proposed project corridor.

  Effects on wetlands and potential for secondary and cumulative effects were identified as topics of potential dispute by Northwest Florida Water Management District. Their dispute justification is as follows. "The proposed use is incompatible with the purpose for which District lands were acquired under the Florida Preservation 2000 program with public funds of the Florida Preservation 2000 Trust Fund, such purpose to protect valuable natural resources. (Florida Preservation 2000 Act: Florida Statute 259.101(7). "

  Additionally, alternatives 4, 5, and 6 provide only marginal improvements to providing "a more direct route from areas of high growth in northern Santa Rosa County to I-10" and improved access to I-10 from Whiting Field US Naval Air Station.

  Based on the combination of identified land use, public funds invested to support that use, and other reasons it is reasonable that Alternatives 4, 5, and 6 do not require further analysis given the apparent viable alternatives exist which do not have these constraints."

General Project Commitments

No General Project Commitments Found

Permits

No Permits Found.

Technical Studies

No Technical Studies Found.

Class of Action

Class of Action	Other Actions
Environmental Impact Statement	Section 4(f) Evaluation
Lead Agency	**Cooperating Agency/Agencies**
Federal Highway Administration	

Signatures

	Name	Review Status	Date
FDOT ETDM Coordinator	Peggy Kelley (FDOT District 3)	ACCEPTED	5/12/2010
Comments	No comments were found.		
	Name	**Review Status**	**Date**
Lead Agency ETAT Member	Cathy Kendall (Federal Highway Administration)	ACCEPTED	5/21/2010
Comments	The following notes were included in the FHWA acceptance of the P&N, which should be reflected as the project moves forward into PD&E: Since the intent seems to be to acquire enough right-of-way for an ultimate 4-lane project, the scope of the PD&E should assess the impacts of a 4-lane facility, with the understanding that it is likely to be a phased improvement. DCA noted potential inconsistencies with comprehensive land use and environmental policies in their AN/ETDM review. Some of these concerns could potentially be addressed using access management standards for the project as a means of guiding secondary development to the most appropriate locations. This should be addressed during PD&E. The project description states that the LRTP indicates the year 2025 as the design year for the project. Funding in the associated planning documents should therefore be consistent with this schedule. In other words, a portion of the construction funding would need to be indicated by the year 2025, with money for design and right-of-way programmed for earlier dates in the LRTP, TIP and STIP. FHWA would look for consistency with these documents, as well as the local comprehensive plans, before PD&E approval.		

Dispute Resolution Activity Log

No Dispute Actions Found.

Appendicies

Legend			
Color Code	**Meaning**	**ETAT**	**Public Involvement**
0	None	The issue is present, but the project will have no impact on the issue; project has no adverse effect on ETAT resources; permit issuance or consultation involves routine interaction with the agency.	No community opposition to the planned project. No adverse effect on the community.
1	Enhanced	Project has positive effect on the ETAT resource or can reverse a previous adverse effect leading to environmental improvement.	Affected community supports the proposed project. Project has positive effect.
2	Minimal to None	Project has little adverse effect on ETAT resources. Permit issuance or consultation involves routine interaction with the agency. Low cost options are available to address concerns.	Minimum community opposition to the planned project. Minimum adverse effect on the community.
3	Moderate	Agency resources are affected by the proposed project, but avoidance and minimization options are available and can be addressed during development with a moderated amount of agency involvement and moderate cost impact.	Project has adverse effect on elements of the affected community. Public Involvement is needed to seek alternatives more acceptable to the community. Moderate community interaction will be required during project development.
4	Substantial	The project has substantial adverse effects but ETAT understands the project need and will be able to seek avoidance and minimization or mitigation options during project development. Substantial interaction will be required during project development and permitting.	Project has substantial adverse effects on the community and faces substantial community opposition. Intensive community interaction with focused Public Involvement will be required during project development to address community concerns.
5	Dispute Resolution	Project does not conform to agency statutory requirements and will not be permitted. Dispute resolution is required before the project proceeds to programming	Community strongly opposes the project. Project is not in conformity with local comprehensive plan and has severe negative impact on the affected community.
	No ETAT Consensus	ETAT members from different agencies assigned a different degree of effect to this project, and the ETDM coordinator has not assigned a summary degree of effect.	
	No ETAT Reviews	No ETAT members have reviewed the corresponding issue for this project, and the ETDM coordinator has not assigned a summary degree of effect.	

Supporting Documents

Date	Type	Size	Link	Name / Description
6/08/2010	Meeting Minutes	924 KB	http://etdmpub.fla-etat.org/est/servlet/blobViewer?blobID=10076	Public Involvement Comments: Comments received from the March 23rd Kick-Off Mtg
12/17/2009	Ancillary AN Package Documentation	4.04 MB	http://etdmpub.fla-etat.org/est/servlet/blobViewer?blobID=9215	SR 87 Maps: SR 87 Connector Project Description Reference Maps
12/14/2009	Form SF-424: Application for Federal Assistance	246 KB	http://etdmpub.fla-etat.org/est/servlet/blobViewer?blobID=9172	SR 87 Connector: SR 87 from SR 87S to SR 87N

Appendix B: Plan Consistency Documentation

Planning Requirements for Environmental Document Approvals with Segmented Implementation

Document Information:

Date: 9/11/2015 **Document Type:** EIS **Document Status:** Available to Public

Project Name: SR 87 Connector **FM #:** 416748

Project Limits: SR 87S/US 90 to SR 87N/Southridge Road **ETDM #:** 12597

Are the limits consistent with the plans? **Yes**

Identify MPO(s) (if applicable): Florida-Alabama TPO **Original PD&E FAP#** SFT1 296 R and S129 348 R

Segment Information: (Add additional tables as needed to describe all segments within the logical termini limits. Clearly identify segment representing the next funded phase)

Segment Limits: **Segment FM #:** 416748-

Currently Adopted CFP-LRTP	COMMENTS
Yes	

PHASE	Currently Approved TIP	Currently Approved STIP	TIP/STIP $	TIP/STIP FY	COMMENTS
PE (Final Design)	Y	Y	$4,374,240.00	2016-2020	Note: There is currently $7,874,240 in Work Program for FY 2019. The difference in funding is due to $3,500,000 not being added until WP was in the gaming cycle, and will not be considered adopted until the 2015 legislative session ends. At that time (November 2015), the TIP and STIP will be updated.
R/W	N	N	$		Currently outside the horizon of 2035 LRTP; Will be seeking Federal Funding for this phase.
Construction	N	N	$		Currently outside the horizon of 2035 LRTP; Will be seeking Federal Funding for this phase.

FDOT Preparer's Name: Peggy Kelley **Date:** 9/11/2015 **Phone #:** 850 330-1517

Preparer's Signature: Peggy Kelley **Email:** peggy.kelley@dot.state.fl.us

***Attach: County Comprehensive Plan, LRTP, TIP, STIP pages**

Planning Consistency Form
Appendices

Appendix A: County Comprehensive Plan Excerpts. This attachment includes verbiage from Transportation Element and Future Transportation Corridor Map.

Appendix B: 2035 FL-AL LRTP excerpts. This attachment highlights both narrative references to the SR 87 Connector, listings of the project from the LRTP and the Cost Feasible Plan. Report lists item # 54, SR 87 Connector, to be provided with $14,714,314 for ***Design*** in 2016.

Appendix C: FY 2011 STIP and FY 2012 STIP. This attachment references funding allocations for the PD&E phase of the SR 87 Connector. The FY 2015 STIP references the design funds set aside for this project.

Appendix D: FL-AL TPO FY 2014-2018 TIP. This attachment shows the SR 87 Connector as #10 in the TIP Appendix. In addition, the Design Phase is shown in Green as Cost Feasible for #19 SR 87 Connector in Table 2, *FY 14-18 Non-Strategic Intermodal System (Non-SIS) Project Priorities*. FL-AL TPO FY 2015-2019 TIP includes the design funds for this project.

Appendix E: Work Program Summary – Item Segment 416748-3. This attachment includes the FDOT financial information. This includes $4,374,240 for design, as well as the additional $3,500,000 in design funds added during the gaming cycle. Once the 2015 legislative session ends, the TIP and STIP will be updated to include this additional amount.

Narrative

This project is currently Priority 19 in Non-SIS Project Priorities. The PD&E Study began in 2009, and was submitted to FHWA in the Fall of 2014 for public availability review and approval. The Design Phase for this project is included in the Cost Feasible Plan (CFP) of the 2035 Long Range Transportation Plan (LRTP) for the Florida Alabama TPO. The funds included total just over $14M.

The design funding needs for this project are estimated to be just over $7.5M. Currently, there is $4,374,240 in the adopted Work Program for design, and an additional $3.5M in design funds that are tentative for FY 2019. When the 2015 legislative session ends, the TIP and the STIP will be updated to reflect the additional funds. The ROW and Construction phases for this project are beyond the 2035 LRTP. ROW is estimated to occur during the FY 2041-2050 time period for a minimum period of 24 months. The Construction is estimated to occur during the FY 2046-2055 time period for approximately 3-5 years.

Santa Rosa County

Comprehensive Plan Excerpts

and Future Transportation Map

SR 87 Connector

Transportation Element

Goal 4.1 • To provide a safe, cost effective, and functional transportation system for all residents of and visitors to Santa Rosa County that appropriately balances access and mobility needs.

Public Purpose: To establish and maintain the desired and projected transportation system in Santa Rosa County and particularly to plan for future motorized and non-motorized traffic circulations systems. Future traffic circulation systems are supported by goals, objectives, and policies contained herein, and are depicted on the Future Transportation Map Series in this element (reference Figures 4-1 through 4-4).

Objective 4.1.E • Give the highest priority to transportation projects that will relieve existing traffic congestion.

Policy 4.1.E.1 • The County shall use measures of congestion to prioritize transportation projects in the Capital Improvements Element.

Policy 4.1.E.2 • The County shall continue to request, recommend, and support immediate roadway improvements in order to relieve the congestion on the segment of US 90 between Canal Street and SR 87S.

Policy 4.1.E.3 • The County shall continue to request, recommend, and support immediate roadway improvements in order to relieve the congestion on the segment of SR 281 (Avalon Boulevard) between 1-10 and US 90.

Policy 4.1.E.4 • The County shall continue to request, recommend, and support immediate roadway improvements in order to relieve the congestion on all segments of US 98.

Policy 4.1.E.5 • Maps 4-1 through 4 show the planned future transportation system for Santa Rosa County and is incorporated herein by reference.

Objective 4.1.F • Provide a transportation system that optimizes preservation and efficiency of existing transportation facilities by minimizing the need for new highway construction through identification of strategies to reduce travel demand, encourage alternate modes and implement traffic operations improvements.

Policy 4.1.F.1 • The County will coordinate with the Florida-Alabama Transportation Planning Organization (TPO) in the development of the Traffic Operations Project Priorities for inclusion in the five year Transportation Improvement Program and in the development of the Transit Development Plan.

Santa Rosa County
Future Transportation Map Series
Map 4-4 - Needs Not Cost Feasible w/Existing Revenue Sources through 2023
Roads and Trails
Revised November 2011

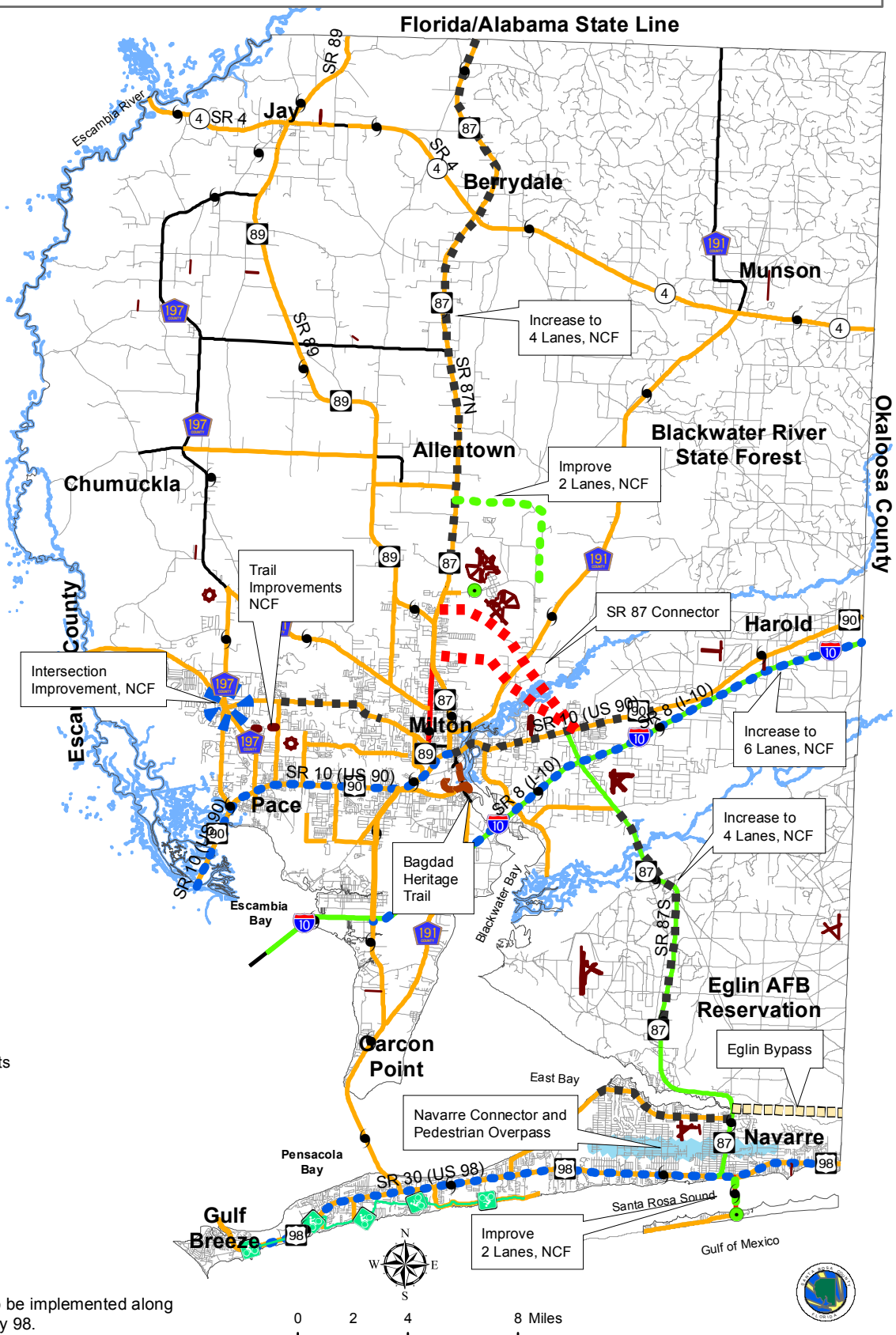

Legend

- Airfields
- Main Roads
- Major Rivers
- Streets
- Bagdad Heritage Trail
- Bicycle Trail
- Evacuation Routes
- Major Trip Generators

Proposed Improvement

Not Cost Feasible

- 87 Connector
- Trail Improvements
- Increase to 6 Lanes
- Eglin Bypass
- Intersection Improvements
- Improve 2 Lanes
- Increase to 4 Lanes
- Navarre Connector

Adopted Level of Service

- (C)
- (D)
- (E)

Corridor Management Project to be implemented along US Highway 90 and US Highway 98.

Additional Changes to the Capital Improvement Element will be reflected in these maps.

Map Document: (C:\mav's-d-drive\mav\work\Nancy\FlumMap UpdateNov2011\New 4-4 Not Cost Feasible.mxd)
11/8/2011 -- 8:34:52 AM

Community Planning, Zoning and Development Division
November 8, 2011

2035 Florida-Alabama

Long Range Transportation Plan

SR 87 Connector

1. Narrative and Excerpts
2. Cost Feasible Plan

SR87 Connector – SR87 South to SR87 North

The purpose of the SR 87 Connector Project Development and Environment (PD&E) Study is to develop a proposed improvement strategy that is technically sound, environmentally sensitive and publicly acceptable. This project is needed to provide for a new roadway facility linking SR

87S with SR 87N, as an alternative to the existing shared facility of SR 87 and US 90, which is a constrained facility that is currently operating at a failing level of service (LOS F). Therefore, the primary need for this new corridor is to provide additional capacity, and to improve regional connectivity by providing a more direct route from areas of high growth in northern Santa Rosa County, such as the Berryhill Road area, to I-10 and to areas further to the south.

Likewise, access will be improved to and from I-10 for the Whiting Field U.S. Naval Air Station, and the County's Joint Use Planning Area near Whiting Field. It is also anticipated that this new facility would provide relief to Ward Basin Road and its intersection with US 90. It is also intended to provide much needed relief to the US 90 Blackwater Bridge.

Emergency Evacuation

SR 87 serves as a vital evacuation route for northbound traffic destined for I-65 in Alabama. During times of hurricane force winds, both the Escambia Bay Bridge and the Garcon Point Bridge close. This leaves SR 87 north to the interstate and beyond the only access point out for many beach area communities, such as Gulf Breeze and Navarre. It is the only access point into the area for Emergency First Responders. However, with a portion of the current alignment travelling along a congested portion of US 90, through historic downtown Milton, it cannot function as a contiguous roadway. The project will address future projected deficiencies on an established emergency hurricane evacuation route.

Multi-modalism

The project will also address the need for greater bicycle and sidewalk connectivity in the County with possible connections to the Blackwater Heritage Trail. Unfortunately, Escambia County Area Transit does not provide service to this area of Santa Rosa County and Santa Rosa County does not currently offer transit service. However, in the future if such services were to be provided, the proposed facility would offer greater opportunities in regional network systems for transit.

Roadway Characteristics

Depending on the corridor selected, the project could range between 6 and 12 miles in length. Based upon preliminary project review, the new facility will likely be a two-lane rural facility with an open drainage system; however, in areas where steep grades or poor soil conditions occur near wetlands, separate stormwater retention ponds may be required.

Social Demand and Economic Development

Santa Rosa County has been experiencing considerable growth over the past year, and is also as a bedroom community to the greater Pensacola area. This growth has spurred the need for an improved roadway network. In addition, there are several major traffic generators within the US 90 corridor area, such as new residential developments, the Santa Rosa Criminal Justice Center, the Santa Rosa Corrections Facility, Whiting Field U.S. Naval Air Station, Team Rosa Joint Planning area near Whiting Field, and the Santa Rosa Commerce Park, which will all benefit from the capacity this facility will provide. The need for the project is also related to committed trips associated with future development in the northern portions of Santa Rosa County, as well

as the future development along the US 90 corridor, which is hindered by the existing capacity limits of US 90.

Future Growth

Santa Rosa County has grown 173% since 1980 and is expected to grow another 92% by 2030. This increase will put further demand on the US 90/SR 87 segment, making growth and evacuation difficult due to a lack of capacity. In Traffic Analysis Zones adjacent to the corridor, population is anticipated to grow by 2,648 from 2,029 to 4,677, or 56.62 percent, between 1997 and 2020. Employment is projected to increase by 575 from 908 to 1,483, or 38.77 percent. The number of dwelling units is forecasted to rise by 1,114 from 827 to 1,941, or 57.39 percent.

Traffic Data

According to the Santa Rosa County Comprehensive Plan, the current adopted Level of Service (LOS) standard for US 90 is D. In 2008, US 90 from Ward Basin Road to SR 87N had a failing level of service. Without the proposed improvement, the operating conditions will continue to deteriorate. The Raw Model Volume for the 2020 Needs Plan for this new segment is 9,472. This would provide much needed relief to US 90.

Safety/Crash Rates

The information below contains crash data from the period of 2004 through 2009 according to the Florida Department of Transportation TSAT data base.

On SR 87 south, from I-10 to US 90, between mile points 18.500 (I-10) and 19.769 (US 90), there were a total of 86 crashes, 47 of those were with injuries, and 39 with property damage only. The majority of the crashes in this segment occurred at the US 90/SR 87S intersection.

On US 90, from 87 south to 87 north, between mile points 11.610 and 16.202, there were a total of 234 crashes, 144 of those were with injuries, 1 fatality, and 89 with property damage only. The majority of these crashes were distributed throughout the segment. There was, however, a slightly higher concentration of crashes at the US 90/SR 87N intersection. The single fatality in the segment occurred at mile point 13.847 just east of Ward Basin Road.

On SR 87N, from US 90 to Southridge Road, between mile points 11.610 and 16.202, there were a total of 166 crashes, 113 of those were with injuries, and 53 with property damage only. As with the segment along US 90, the majority of these crashes were distributed throughout the segment. There was, however, a slightly higher concentration of crashes at the US 90/SR 87N intersection.

The new proposed road way will connect SR 87S and SR 87N. Presently, the SR 87 corridor follows along US 90, a congested roadway, for five miles.

This portion of the corridor is operating at a LOS F. Improvements to the existing roadway in this vicinity are difficult due to the historic downtown Milton area. By developing a new

corridor that does not follow the existing US 90 alignment, the traveler would be able to avoid this high traffic area.

Plan Consistency

The proposed new facility is consistent with the Santa Rosa County Comprehensive Plan, and is also referenced in the County's Capital Improvements Schedule in Policy 4.1.E.3. The Comprehensive Plan design year for this facility is currently 2025. As the project moves through the next study phase and a formal forecast traffic report is completed, the design year will change to allow for a standard twenty year forecast year to comply with federal guidelines (Design Year 2035). Likewise, the proposed new facility is in the TIP and the STIP, as well as, in the Florida/Alabama TPO and listed in their five-year work program.

Roadway Capacity Projects						
Map ID	Corridor	From	To	County	Project Description	2025 Need Plan
48	Pine Forest Road (SR 297)	Nine Mile Road (SR 10)	Nine & One Half Road	Escambia	Provide 4 Lanes of Capacity	Yes
49	Pinestead-Longleaf Connector	SR 297 (Pine Forest Road)	US 29 (SR 95)	Escambia	Realign to Provide 4 Lanes of Capacity	Yes
50	Sorrento Road (SR 292)	South Approach to ICWW Bridge	North Approach to ICWW Bridge	Escambia	Provide 4 Lanes of Capacity	Yes
51	Sorrento Road (SR 292)	North Approach to ICWW Bridge	SR 173 (Blue Angel Parkway)	Escambia	Provide 4 Lanes of Capacity	Yes
52	SR 87 North	CR 87A (Langley St)	Alabama state line	Santa Rosa	Provide 4 Lanes of Capacity	Yes
53	SR 87 South	Eglin Air Force Base boundary	CR 184	Santa Rosa	Provide 4 Lanes of Capacity	Yes
54	SR87 Connector (New Road)	SR87 South	SR87 North	Santa Rosa	New 4 Lane Facility (w/ 1 interchange)	Yes
55	Sterling Way	Bell Lan57e	Avalon Boulevard (SR 281)	Santa Rosa	Provide 4 Lanes of Capacity	No
56	US 29 (SR 95)	I-10 (SR 8)	Nine Mile Road (SR 10)	Escambia	Provide 6 Lanes of Capacity	Yes
57	US 29 (SR 95)	Nine Mile Road (SR 10)	CR 95A	Escambia	Provide 6 Lanes of Capacity	Yes
58	US 90	Us 90 (Scenic Highway)	East Spencer Field Road	Escambia/ Santa Rosa	Provide 6 Lanes of Capacity	Yes
59	US 90	East Spencer Field Road	Avalon Boulevard (SR 281)	Santa Rosa	Provide 6 Lanes of Capacity	Yes
60	US 90	Avalon Boulevard (SR 281)	SR87 North (Stewart Street)	Santa Rosa	Provide 6 Lanes of Capacity	Yes
61	US 90	SR 87 North (Stewart Street)	Airport Road	Santa Rosa	New/Realigned 4 Lane Capacity	Yes
62	US 90	Airport Road	SR87 South	Santa Rosa	Provide 4 Lanes of Capacity	Yes
63	US 90	SR 87 South	S.A. Jones Road	Santa Rosa	Provide 4 Lanes of Capacity	Yes
64	US 90	Us 90 / US 98 Connector	US 29 Connector	Escambia/ Baldwin	Provide 4 Lanes of Capacity	Yes
65	US 90 / US 98 Connector (New Road)	US 98 (SR 30)	US 90 (SR 10)	Baldwin	Provide 2 Lanes of New Capacity	Yes
66	US 98	SR 399 (end of 6 Lanes)	East end of Naval Live Oaks	Santa Rosa	Provide 6 Lanes of Capacity	Yes
67	US 98	Bayshore Road	Portside Drive	Santa Rosa	Provide 6 Lanes of Capacity	Yes
68	US 98	Portside Drive	Bergren Road	Santa Rosa	Provide 6 Lanes of Capacity	Yes
69	US 98	Bergren Road	Belle Meade Circle	Santa Rosa	Provide 6 Lanes of Capacity	Yes

Florida-Alabama TPO 2035 LRTP
Fiscal Year 2016-2020 Year of Expenditure Cost Feasible Plan

Project Corridor	To	From	Phase	2010 Cost	YOE Cost
Main Street	Barrancas Avenue	"A" Street	PE	$206,084	$259,879
Nine Mile Road (US 90A)	SR 297 (Pine Forest Road)	US 29 (SR 95)	ROW	$ 1,000,000	$1,261,034
			CST	$12,778,000	$16,113,493
Nine Mile Road (US 90A)	I-10 (SR8)	SR 297 (Pine Forest Road)	PDE	$2,261,083	$2,851,303
			ROW	$2,100,000	$2,648,172
SR87 Connector	SR87 South	SR87 North	PE	$11,668,451	$14,714,314
Corridor Management Box			PDE	$620,000	$781,841
Corridor Management Box			PE	$1,300,000	$1,639,344
Corridor Management Box			ROW	$1,000,000	$1,261,034
Corridor Management Box			CST	$6,000,000	$7,566,204
Enhancement Program				$2,350,000	$2,963,430
Transit Capital Box			CST	$1,250,000	$1,576,293
Transit Ops Box			CST	$15,565,764	$19,628,958
Bike Ped Box			PE	$400,000	$504,414
Bike Ped Box			ROW	$350,000	$441,362
Bike Ped Box			CST	$1,000,000	$1,261,034
ITS Box			CST	$9,000,000	$11,349,306
		FY 2016-2020	**Total**	**$55,054,847**	**$69,426,037**

is needed to straighten curves and smooth dips and rises in the road, this would be considered a more expensive and hence longer-term proposition. The TPO will work with local governments and the FDOT to insure these types of improvements are considered in on-going maintenance projects, corridor studies, safety projects, etc. These projects will also be considered during the annual priority setting process by the TPO.

Longer-Term Recommendations

A bridge replacement project on US 90 over Macavis Bayou programmed in the TIP will help alleviate congestion in the east/west direction through Milton. Longer term, the planned SR 87 by-pass will both divert freight traffic around Milton and serve the Whiting Field aviation commerce park. A PD&E study is in progress but funding for ROW and construction are not programmed. Likewise, US 98 suffers from severe congestion and delay, which discourages its use as a major east/west freight through route, but local deliveries are impeded. A future by-pass planned in the Navarre area would alleviate congestion, but funding has not been identified in the TIP at this time.

Improved access to the region's interstate system would benefit existing and proposed economic activity centers. For example, a new interchange on Interstate I-10 at 9th Avenue would provide more direct access to Pensacola Gulf Coast Airport. Such an improvement requires FHWA approval through an Interchange Justification Report (IJR). Funding has not been identified in the TIP at this time.

US 90 (Nine Mile Road) from Chemstrand Road to I-10 could provide access to surrounding land uses if they were to develop in the future as major freight and distribution centers. However, the road is currently failing in terms of congestion and would need improvement and expansion before this could happen.

Roadway Capacity Projects						
Map ID	Corridor	From	To	County	Project Description	2025 Need Plan
48	Pine Forest Road (SR 297)	Nine Mile Road (SR 10)	Nine & One Half Road	Escambia	Provide 4 Lanes of Capacity	Yes
49	Pinestead-Longleaf Connector	SR 297 (Pine Forest Road)	US 29 (SR 95)	Escambia	Realign to Provide 4 Lanes of Capacity	Yes
50	Sorrento Road (SR 292)	South Approach to ICWW Bridge	North Approach to ICWW Bridge	Escambia	Provide 4 Lanes of Capacity	Yes
51	Sorrento Road (SR 292)	North Approach to ICWW Bridge	SR 173 (Blue Angel Parkway)	Escambia	Provide 4 Lanes of Capacity	Yes
52	SR 87 North	CR 87A (Langley St)	Alabama state line	Santa Rosa	Provide 4 Lanes of Capacity	Yes
53	SR 87 South	Eglin Air Force Base boundary	CR 184	Santa Rosa	Provide 4 Lanes of Capacity	Yes
54	SR87 Connector (New Road)	SR87 South	SR87 North	Santa Rosa	New 4 Lane Facility (w/ 1 interchange)	Yes
55	Sterling Way	Bell Lan57e	Avalon Boulevard (SR 281)	Santa Rosa	Provide 4 Lanes of Capacity	No
56	US 29 (SR 95)	I-10 (SR 8)	Nine Mile Road (SR 10)	Escambia	Provide 6 Lanes of Capacity	Yes
57	US 29 (SR 95)	Nine Mile Ro59ad (SR 10)	CR 95A	Escambia	Provide 6 Lanes of Capacity	Yes
58	US 90	Us 90(Scenic Highway)	East Spencer Field Road	Escambia/ Santa Rosa	Provide 6 Lanes of Capacity	Yes
59	US 90	East Spencer Field Road	Avalon Boulevard (SR 281)	Santa Rosa	Provide 6 Lanes of Capacity	Yes
60	US 90	Avalon Boulevard (SR 281)	SR87 North (Stewart Street)	Santa Rosa	Provide 6 Lanes of Capacity	Yes
61	US 90	SR 87 North (Stewart Street)	Airport Road	Santa Rosa	New/Realigned 4 Lane Capacity	Yes
62	US 90	Airport Road	SR87 South	Santa Rosa	Provide 4 Lanes of Capacity	Yes
63	US 90	SR 87 South	S.A. Jones Road	Santa Rosa	Provide 4 Lanes of Capacity	Yes
64	US 90	Us 90 / US 98 Connector	US 29 Connector	Escambia/ Baldwin	Provide 4 Lanes of Capacity	Yes
65	US 90 / US 98 Connector (New Road)	US 98 (SR 30)	US 90 (SR 10)	Baldwin	Provide 2 Lanes of New Capacity	Yes
66	US 98	SR 399 (end of 6 Lanes)	East end of Naval Live Oaks	Santa Rosa	Provide 6 Lanes of Capacity	Yes
67	US 98	Bayshore Road	Portside Drive	Santa Rosa	Provide 6 Lanes of Capacity	Yes
68	US 98	Portside Drive	Bergren Road	Santa Rosa	Provide 6 Lanes of Capacity	Yes
69	US 98	Bergren Road	Belle Meade Circle	Santa Rosa	Provide 6 Lanes of Capacity	Yes

Florida-Alabama TPO 2035 LRTP
Fiscal Year 2016-2020 Year of Expenditure Cost Feasible Plan

Project Corridor	To	From	Phase	2010 Cost	YOE Cost
Main Street	Barrancas Avenue	"A" Street	PE	$206,084	$259,879
Nine Mile Road (US 90A)	SR 297 (Pine Forest Road)	US 29 (SR 95)	ROW	$ 1,000,000	$1,261,034
			CST	$12,778,000	$16,113,493
Nine Mile Road (US 90A)	I-10 (SR8)	SR 297 (Pine Forest Road)	PDE	$2,261,083	$2,851,303
			ROW	$2,100,000	$2,648,172
SR87 Connector	SR87 South	SR87 North	PE	$11,668,451	$14,714,314
Corridor Management Box			PDE	$620,000	$781,841
Corridor Management Box			PE	$1,300,000	$1,639,344
Corridor Management Box			ROW	$1,000,000	$1,261,034
Corridor Management Box			CST	$6,000,000	$7,566,204
Enhancement Program				$2,350,000	$2,963,430
Transit Capital Box			CST	$1,250,000	$1,576,293
Transit Ops Box			CST	$15,565,764	$19,628,958
Bike Ped Box			PE	$400,000	$504,414
Bike Ped Box			ROW	$350,000	$441,362
Bike Ped Box			CST	$1,000,000	$1,261,034
ITS Box			CST	$9,000,000	$11,349,306
US98 (Phillip Beal Bridge)[1]	Replacement of existing structure		PE	TBD	TBD
			ROW	TBD	TBD
			CST	TBD	TBD

Appendix E: 2035 Needs Plan Master Project List

Map ID	Corridor	From	To	County	Improvement	2025 Need Plan
39	Nine Mile Road (US 90)	University Parkway	Davis Highway (SR 291)	Escambia	Provide 6 Lanes of Capacity	Yes
40	Nine Mile Road (US 90)	Davis Highway (SR 291)	Scenic Highway (SR 10A)	Escambia	Provide 6 Lanes of Capacity	Yes
41	Ninth Avenue (SR 289)	Bayou Boulevard (SR 296)	Langley Avenue	Escambia	Provide 6 Lanes of Capacity	Yes
42	Ninth Avenue (SR 289)	Langley Avenue	Olive Road (SR 290)	Escambia	Provide 6 Lanes of Capacity	Yes
43	Olive Road (SR 290)	Old Palafox Highway (CR95A)	Davis Highway (SR 291)	Escambia	Provide 3 Lanes of Capacity	Yes
44	Olive Road (SR 290)	Davis Highway	Ninth Avenue (SR 289)	Escambia	Provide 3 Lanes of Capacity	Yes
45	Olive Road (SR 290)	Ninth Avenue (SR 289)	Scenic Highway (SR 10A)	Escambia	Provide 3 Lanes of Capacity	Yes
46	Perdido Key Drive (SR 292)	Alabama State Line	South Approach to ICWW Bridge	Escambia	Provide 4 Lanes of Capacity	Yes
47	Pine Forest Road (SR 297)	I-10 (SR 8)	Nine Mile Road (SR 10)	Escambia	Provide 4 Lanes of Capacity	Yes
48	Pine Forest Road (SR 297)	Nine Mile Road (SR 10)	Nine & One Half Road	Escambia	Provide 4 Lanes of Capacity	Yes
49	Pinestead-Longleaf Connector	SR 297 (Pine Forest Road)	US 29 (SR 95)	Escambia	Realign to Provide 4 Lanes of Capacity	Yes
50	Sorrento Road (SR 292)	South Approach to ICWW Bridge	North Approach to ICWW Bridge	Escambia	Provide 4 Lanes of Capacity	Yes
51	Sorrento Road (SR 292)	North Approach to ICWW Bridge	SR 173 (Blue Angel Parkway)	Escambia	Provide 4 Lanes of Capacity	Yes
52	SR 87 North	CR 87A (Langley St)	Alabama state line	Santa Rosa	Provide 4 Lanes of Capacity	Yes
53	SR 87 South	Eglin Air Force Base boundary	CR 184	Santa Rosa	Provide 4 Lanes of Capacity	Yes
54	SR87 Connector (New Road)	SR87 South	SR87 North	Santa Rosa	New 4 Lane Facility (w/ 1 interchange)	Yes
55	Sterling Way	Bell Lane	Avalon Boulevard (SR 281)	Santa Rosa	Provide 4 Lanes of Capacity	No
56	US 29 (SR 95)	I-10 (SR 8)	Nine Mile Road (SR 10)	Escambia	Provide 6 Lanes of Capacity	Yes
57	US 29 (SR 95)	Nine Mile Road (SR 10)	CR 95A	Escambia	Provide 6 Lanes of Capacity	Yes
58	US 90	Us 90 (Scenic Highway)	East Spencer Field Road	Escambia/Santa Rosa	Provide 6 Lanes of Capacity	Yes
59	US 90	East Spencer Field Road	Avalon Boulevard (SR 281)	Santa Rosa	Provide 6 Lanes of Capacity	Yes

Cost Feasible Plan Modification Report

FLORIDA-ALABAMA 2035 LONG RANGE TRANSPORTATION PLAN OR BLUEPRINT 2035

Prepared for

Florida-Alabama Transportation Planning Organization and The Florida Department of Transportation, District Three

Prepared by

West Florida Regional Planning Council
Staff to the Florida-Alabama
Transportation Planning Organization

December 2013

This report was financed in part by the U.S. Department of Transportation, Federal Highway Administration, the Florida Department of Transportation, and local participating governments, in partial fulfillment of UPWP Work Task C.2

Adopted Cost Feasible Plan Projects - Modified October 4, 2013

Transportation Blueprint 2035 Cost Feasible Plan

Modified October 4, 2013

Project ID	Roadway Corridor	From	To	Project Description	Total Project Cost (2010)	2014-2015	TIP Projects (2010-2015)[1]				2016-2020				2021-2025				2026-2030				2031-2035				Grand Total[3]
						PE/PDE	PE/PDE	ROW	CST	Total	PE/PDE	ROW	CST	Total	PE/PDE	ROW	CST	Total	PE/PDE	ROW	CST	Total	PE/PDE	ROW	CST	Total	
SIS/FIHS Cost Feasible Plan Projects																											
56 (2186031)	**US 29**	I-10	Nine and a 1/2 Mile Road	Provide 6 Lanes of Capacity	50,873,376			13,333,004		13,333,004			37,540,372	37,540,372							-	-					37,540,372
2204423	**SR87**	N of Five Forks	Eglin AFB Boundary	Provide 4 lanes of Capacity	23,812,554				23,812,554	23,812,554																	
2224771 [2]	**SR8 (I-10)**	SR291 Davis Hwy	SR10A (US90) Scenic Hwy	Provide 6 Lanes of Capacity	50,407,360		1,357	6,905,813	43,500,190	50,407,360																	
22	**I-10 (SR 8) @ US29 (SR 95)**			Modified Interchange	5,289,682		858,000			858,000							4,431,682	4,431,682									4,431,682
2204427	**SR 87**	Eglin AFB Boundary	2 miles S. Yellow Bridge	Provide 4 lanes of Capacity	24,592,452			530,000	24,062,452	24,592,452																	
2204424	**SR 87**	2 miles S. Yellow Bridge	CR 184 (Hiclory Hammock Road)	Provide 4 lanes of Capacity	37,905,460								37,905,460	37,905,460													37,905,460
19 (4331131)	**I-10 (SR8) @ Beulah Rd**			New Interchange	79,367,221		2,025,000			2,025,000	5,524,444			5,524,444													5,524,444
26 (4130623)	**I-10**	Escambia Bay Bridge	Avalon Boulevard	Provide 6 Lanes of Capacity	46,279,557		3,976,280	12,056,002		16,032,282						13,607,988	47,894,970	61,502,958									61,502,958
	Totals				**318,527,662**		**$6,860,637**	**32,824,819**	**91,375,196**	**131,060,652**	**5,524,444**		**75,445,832**	**80,970,276**		**13,607,988**	**52,326,652**	**65,934,640**									**103,475,012**

Project ID	Roadway Corridor	From	To	Project Description	Total Project Cost (2010)	2014-2015	2010-2015				2016-2020				2021-2025				2026-2030				2031-2035				Grand Total
						PE/PDE	PE/PDE	ROW	CST	Total	PE/PDE	ROW	CST	Total	PE/PDE	ROW	CST	Total	PE/PDE	ROW	CST	Total	PE/PDE	ROW	CST	Total	
Other Arterial/TMA Cost Feasible Plan Projects																											
2204125	SR281 Avalon Blvd	Commerce Road	SR10 (US90)	Provide 4 lanes of capacity	10,095,980		54,055		10,041,925	10,095,980																	
2204126	SR281 Avalon Blvd	N of CSX R/R Bridge	S of Commerce Road	Provide 4 lanes of capacity	7,563,303				7,563,303	7,563,303																	
2204127	SR281 Avalon Blvd	S of Moor's Lodge	N of CSX R/R Bridge	Provide 4 lanes of capacity	13,788,203		54,007		13,734,196	13,788,203																	
2204128	SR281 Avalon Blvd	SR8 (I-10)	S of Moor's Lodge	Provide 4 lanes of capacity	8,845,842		49,858		8,795,984	8,845,842																	
30	Main Street	Barrancas Avenue	Baylen Street	Improve to 2 Lane Facility	6,930,802						554,464			554,464	831,696	-	304,858	1,136,554			3,930,835	3,930,835					5,621,853
31	Bayfront Parkway (SR 196)	Tarragona Street	Chase Street	Improve to 2 Lane Facility	4,687,006						374,961			374,961	562,441			562,441		-	3,749,605	3,749,605					4,687,007
8	Burgess Road (SR 742)	US 29 (SR 95)	I-110 Overpass	Realign to Provide 4 Lanes of Capacity	26,381,898		1,100,000			1,100,000		5,000,000		5,000,000			2,599,386	2,599,386			17,571,845	17,571,845					25,171,231
37 (2186052)	Nine Mile Road (US 90A)	SR 297 (Pine Forest Road)	US 29 (SR 95)	Provide 4 Lanes of Capacity	14,141,218			2,445,465		2,445,465			10,300,000	10,300,000													10,300,000

36	Nine Mile Road (US 90A)	US 90 (SR 10A)	SR 297 (Pine Forest Road)	Provide 4 Lanes of Capacity	64,620,499		1,520,000			1,520,000	6,009,571			6,009,571										6,147,541		6,147,541	12,157,112
49	Pinestead-Longleaf Connector	SR 297 (Pine Forest Road)	US 29 (SR 95)	Provide 4 Lanes of Capacity	26,529,174												6,136,095	6,136,095									6,136,095
16	Gulf Beach Highway (SR292)	SR 173 (Blue Angel Parkway)	Fairfield Drive (SR727)	Provide 4 Lanes of Capacity	36,668,308										6,307,332			6,307,332									6,307,332
17	Gulf Beach Highway (SR292)	Fairfield Drive (SR727)	Navy Boulevard (SR295)	Provide 4 Lanes of Capacity	21,112,056										3,631,494			3,631,494									3,631,494
46	SR 292 (Perdido Key Drive)	South end of ICWW Bridge	North end of ICWW Bridge	Provide 4 Lanes of Capacity	18,620,868														5,123,249		5,123,249						5,123,249
52	SR 87 North	CR 87A (Langley St)	TPO Urban Area Boundary	Provide 4 Lanes of Capacity	38,633,657																	2,520,847				2,520,847	2,520,847
54	SR87 Connector	SR87 South	SR87 North	New 4 Lane Facility (w/ 1 interchange)	178,916,247						14,714,314			14,714,314													14,714,314
60	US 90	Avalon Boulevard (SR 281)	SR87 North (Stewart Street)	Provide 6 Lanes of Capacity	21,859,132											13,791,867		13,791,867						5,122,951	25,774,590	30,897,541	44,689,408
61	US 90	Glover Ln/Old Hwy 90	Airport Road	New/Realigned 4 Lane Capacity	55,489,136																	4,310,061					4,310,061
62	US 90	Airport Road	SR87 South	Provide 4 Lanes of Capacity	17,365,118										2,675,839			2,675,839									2,675,839
63	US 90	SR87 South	S.A. Jones Rd	Provide 4 Lanes of Capacity	39,691,699														7,190,525		7,190,525						7,190,525
67	US 98	Bayshore Drive	Portside Drive	Provide 6 Lanes of Capacity	51,945,419											12,573,964		12,573,964						32,091,516		32,091,516	44,665,480
85	Langley/Tippin/9th Avenue			Major Intersection Improvement	28,070,339						2,074,968													6,147,541			8,222,509
72	US29 Connector (New Road)	US90 (SR10)	US29 (SR95)	New 4 Lane Facility (w/ 1 interchange)	211,671,034																	6,830,908					6,830,908
75 (4219941)	Woodbine Road (CR197A)	US90 (SR10)	Five Points Intersection	Provide 4 lanes of Capacity and Intersection Realignment[7]	38,184,733				1,000,000	1,000,000																	1,000,000
46 (4210111)	SR 292 (Perdido Key Drive)	Alabama State Line	Gulf Beach Highway / Innerarity Point Road	Provide 4 lanes of capacity	96,851,600		1,366,000			1,366,000						2,000,000		2,000,000									3,366,000
50[6] (4210121)	SR173 Blue Angel Pkwy	SR292 Sorrento Road	SR30 (US98)	Provide 4 lanes of capacity	55,879,050							1,367,080															1,367,080
51[6] (4210112)	Sorrento Road (SR292)	Gulf Beach Highway / Innerarity Point Road	Blue Angel Parkway	Provide 4 Lanes of Capacity	65,659,094							1,367,080															1,367,080
NA	Box $130,000 Annually for Corridor Management Studies			Corridor Management Studies	2,600,000					900,000	781,841			781,841	917,160			917,160	1,078,261		1,078,261	1,250,000				1,250,000	4,027,262
NA	Box $1,500,000 Annually for Corridor Management Plan Improvements			Corridor Management Improvements	28,500,000		602,000		5,700,000	6,302,000	1,639,344	1,261,034	7,566,204	10,466,582	1,923,077	1,479,290	8,875,740	12,278,107	2,260,870	1,739,130	10,434,783	14,434,783	2,663,934	2,049,180	12,295,082	17,008,196	54,187,668
	Totals				**1,113,008,382**		4,691,865	2,445,465	29,230,180	**37,267,510**	18,064,924	8,995,194	17,866,204	**34,945,937**	16,849,039	29,845,121	17,916,079	**47,761,200**	15,652,905	1,739,130	35,687,068	**37,426,198**	17,575,750	51,558,729	38,069,672	**89,628,401**	**209,761,736**

Florida Department of Transportation

FY 2011, 2012, 2015

State Transportation Improvement Program

SR 87 Connector

HIGHWAYS

ITEM NO / OLD ITEM / DESCRIPTION / COUNTY / RDWY ID / PROJ LGTH / FEDERAL AID NUMBER	TYPE OF WORK / EXIST/IMPROVE/ADD (LANES) / FISCALYR / FUND	PRELIMINARY ENGINEERING	RIGHT-OF-WAY	RAILROADS & UTILITIES	CONSTRUCTION	GRANTS & MISC.
4153657 SR 281						
GARCON POINT BRIDGE BRIDGE NO. 580174						
SANTA ROSA	TOLL PLAZA					
58170000 3.496 MI	2 0 0					
	2011 DSBC	55,000	0	0	0	0
4153721 SR 89 ALABAMA STREET						
FROM S CITY LIMITS OF JAY TO SR 4						
SANTA ROSA	RESURFACING					
58060000 1.126 MI	2 2 0					
	2011 DIH	0	0	0	3,150	0
4155811 SR 8 (I-10)						
BLACKWATER RIVER BRIDGE BRIDGE NO. 580168						
SANTA ROSA	BRIDGE-REPAIR/REHABILITATION					
58002000 .589 MI	4 0 0					
	2011 DIH	0	0	0	1,000	0
4167481 SR 87						
FROM N END OF CLEAR CK BR TO ALABAMA STATE LINE						
SANTA ROSA	PD&E/EMO STUDY					
58050000 20.768 MI	2 2 2					
	2011 DIH	7,320	0	0	0	0
4167483 SR 87S / SR 87N						
CONNECTOR NEW ALIGNMENT						
SANTA ROSA	PD&E/EMO STUDY					
58050000 7.914 MI	4 4 2					
	2011 DIH	938	0	0	0	0
4167484 SR 87						
PD&E STUDY - EXPANSION						
SANTA ROSA	PD&E/EMO STUDY					
58000000 8.450 MI	0 0 0					
TCSP-033-U	2011 TCSP	3	0	0	0	0
T129-348-R	2011 S129	2	0	0	0	0
	** ITEM TOTALS **	5	0	0	0	0

ITEM NO / OLD ITEM / DESCRIPTION / COUNTY / RDWY ID / PROJ LGTH / FEDERAL AID NUMBER	TYPE OF WORK / EXIST/IMPROVE/ADD (LANES) / FISCALYR / FUND	PRELIMINARY ENGINEERING	RIGHT-OF-WAY	RAILROADS & UTILITIES	CONSTRUCTION	GRANTS & MISC.
4153721 SR 89 ALABAMA STREET						
FROM S CITY LIMITS OF JAY TO SR 4						
SANTA ROSA	RESURFACING					
58060000 1.126 MI	2 2 0					
	2012 DIH	0	0	0	2,919	0
4167481 SR 87						
FROM N END OF CLEAR CK BR TO ALABAMA STATE LINE						
SANTA ROSA	PD&E/EMO STUDY					
58050000 20.768 MI	2 2 2					
	2012 DIH	2,255	0	0	0	0
4167483 SR 87S / SR 87N						
CONNECTOR NEW ALIGNMENT						
SANTA ROSA	PD&E/EMO STUDY					
58050000 7.914 MI	4 4 2					
	2012 DIH	1,887	0	0	0	0
4169371 SR 10 (US 90)						
FROM CR 197A WOODBINE RD TO SR 281 AVALON BLVD						
SANTA ROSA	RESURFACING					
58010000 6.177 MI	5 5 0					
	2012 DIH	0	0	0	305	0
4212431 SR 10 (US 90)						
OVER WHITE RIVER BRIDGE NO. 580055						
SANTA ROSA	BRIDGE REPLACEMENT					
58010000 .544 MI	2 2 0					
	2012 BNBR	0	0	0	2,013,303	0
	DIH	82,145	0	0	137,480	0
4801-048-P	2012 ACBR	0	0	0	7,132,901	0
	BNBR	0	0	0	7,892,240	0
	** ITEM TOTALS **	82,145	0	0	17,175,924	0
4212441 SR 10 (US 90)						
OVER BASS HOLE COVE BRIDGE NO. 580057						
SANTA ROSA	BRIDGE REPLACEMENT					
58010000 .418 MI	4 2 0					
	2012 DIH	41,082	0	0	0	0
4801-049-P	2012 ACBR	0	0	0	6,332,732	0
	** ITEM TOTALS **	41,082	0	0	6,332,732	0

Effective Date: 07/01/2015

Florida Department of Transportation

Run: 08/27/2015 15.21.26

5 Year TIP

View 5 Year TIP Phase Grouping Crosswalk

Item Segment: 416748 3

Fund	<2016	2016	2017	2018	2019	2020	>2020	All Years
HIGHWAYS								
Item Number: 416748 3 Project Description: SR 87S / SR 87N CONNECTOR NEW ALIGNMENT *NON-SIS*								
District: 03 County: SANTA ROSA Type of Work: PRELIM ENG FOR FUTURE CAPACITY Project Length: 13.949								
P D & E / MANAGED BY FDOT								
CM -CONGESTION MITIGATION - AQ	10,867	0	0	0	0	0	0	10,867
DIH -STATE IN-HOUSE PRODUCT SUPPORT	127,538	1,397	0	0	0	0	0	128,935
DS -STATE PRIMARY HIGHWAYS & PTO	12,848	0	0	0	0	0	0	12,848
EB -EQUITY BONUS	65,225	0	0	0	0	0	0	65,225
HPP -HIGH PRIORITY PROJECTS	2,131,399	0	0	0	0	0	0	2,131,399
S129 -STP EARMARKS - 2008	430,884	0	0	0	0	0	0	430,884
TCSP -TRANS, COMMUNITY & SYSTEM PRES	2,587	0	0	0	0	0	0	2,587
PRELIMINARY ENGINEERING / MANAGED BY FDOT								
DIH -STATE IN-HOUSE PRODUCT SUPPORT	0	0	0	0	43,309	0	0	43,309
SA -STP, ANY AREA	0	0	0	0	4,330,931	0	0	4,330,931
Item 416748 3 Totals:	**2,781,348**	**1,397**	**0**	**0**	**4,374,240**	**0**	**0**	**7,156,985**
Project Total:	**2,781,348**	**1,397**	**0**	**0**	**4,374,240**	**0**	**0**	**7,156,985**
District 03 Totals:	**2,781,348**	**1,397**	**0**	**0**	**4,374,240**	**0**	**0**	**7,156,985**
Grand Total	**2,781,348**	**1,397**	**0**	**0**	**4,374,240**	**0**	**0**	**7,156,985**

Florida-Alabama TPO

FY 14-18; FY 16-20

Transportation Improvement Program

SR 87 Connector

Florida- Alabama Transportation Planning Organization
Status Report for Ongoing Projects

	FDOT Project #	Project Description	Limits	Total Remaining Project Cost (2010 $)	PD&E	Design	ROW	CST	Comments
1	218605-2	9 Mile SR 10 (US 90A)	SR 297 Pine Forest to SR 95 (US 29)	$13,778,350	Update Underway (Escambia County Funded)	Underway (Funded in FY09 in FY 09-13 TIP with State / Federal Funds)		LRTP CFP in FY 16-20 with State / Federal Funds	Escambia County is currently doing a PD&E Update. Design was funded as a separate project phase in FY 2009; this appeared in the FY 09-13 TIP.
2	421012-1	SR 173 Blue Angel Parkway	SR 292 Sorrento Rod to SR 30 (US 98)	$31,422,595	Underway (TRIP Funded in FY 07-11 TIP)	Underway (TRIP Funded in FY 07 in FY 07-11 TIP)	LRTP CFP in FY 10-15 with $15,000,000 in TIF Funds and in FY 16-20 with $1,367,080 in State/ Federal Funds	LRTP CFP in FY 16-20 with $36,000,000 in TIF Funds	Carry-over table added to LRTP Cost Feasible Plan to illlustrate when PD&E and Design were funded.
3	421011-2	SR 292 Sorrento Road	Innerarity Point Rd to SR 173 Blue Angel Pkwy.	$70,003,134	Underway (TRIP Funded in FY 06 in FY 06-10 TIP)	Underway (TRIP Funded in FY 08 in FY 08-12 TIP)	LRTP CFP in FY 10-15 in FY 10-15 with $20,000,000 in TIF Funds and in FY 16-20 with $1,367,080 in State/ Federal Funds	LRTP CFP in FY 21-25 with $40,300,000 in TIF Funds	Carry-over table added to LRTP Cost Feasible Plan to illlustrate when PD&E and Design were funded.
4	421014-1	Pinestead- Longleaf Connector	SR 297 Pine Forest to SR 95 (US 29)	$26,529,174	Underway (TRIP Funded in FY 06 in FY 06-10 TIP)	Underway (TRIP Funded in FY 08 in FY 08-12 TIP)	LRTP CFP in FY 10-15 with $8,000,000 in LOST Funds	$8,200,000 in LOST Funds and in FY 21-25 with $8,136,095 in State / Federal Funds	
5	218429-1 / 218404-1	Burgess Road (Realign and widen)	From SR 95 (US 29) to I-110 Overpass (Creighton Rd)	$26,381,898	Update Underway (Escambia County Funded)	Funded in FY 12 in FY 12-16 TIP (State / Federal Funds)	Funded in FY 13/14 in the FY 14-18 TIP	LRTP CFP in FY 21-25 & 26-30 with State / Federal Funds	
6	416748-1	SR 87	Whiting Field to Alabama State Line	$73,905,117	Underway (Funded with State / Federal Funds in FY 09 in 09-13 TIP)	LRTP CFP for FY 31-35 *only segment from Whiting Field to TPO boundary* (State / Federal Funds)			Project #4167482, SR 87 from the end of Clear Crekk Bridge to South Coldwater Creek, is now in the FDOT Work Program with $1,000 for Design in FY 11/12 and $3,345,645 for Design in FY 12/13. The TIP Amendment will be presented to the TPO for approval in March.
7	222476-1	I-10 & SR 95 (US 29)	Interchange	$22,500,000	Re-eval Underway (funded with State / Federal funds in FY 07 in FY 07-11 TIP)	$200,000 for 40% design of interim improvements			Funding listed for design is within current contract for re-evaluation; project being designed is an interim phase of the overall project.
8		Langley / Tippen / 9th Ave.	Major intersection improvement	$28,070,339	Underway (county funded)	LRTP CFP for FY 16-20 (State / Federal Funds)	LRTP CFP in FY 31-35 with State / Federal Funds		
9	421011-1	SR 292 Perdido Key Drive	Alabama State Line to Innerarity Point Rd.	$53,490,767	Underway (TRIP Funded in FY 09 in FY 09-13 TIP)	Funded in FY 14/15 FY 14-18 TIP	LRTP CFP in FY 16-20 with TIF Funds	LRTP CFP in FY 21-25 with TIF Funds	

10	416748-3	SR 87 N/SR 87 S Connector New Alignment	Area defined by 3 points: 1). North of Clear Creek Bridge, 2). Intersection of US 90 and Glover Lane, 3). Intersection of US 90 and SR 87S	$178,916,247	Underway (Funded with State / Federal funds in FY 10 in FY 09-13 and 10-14 TIPs)	LRTP CFP in FY 16-20 with State / Federal funds	Funding for ROW is outside of current 2035 LRTP	Funding for Construction is outside of current 2035 LRTP	Project is currenty Priority 19 in Non-SIS Project Priorities. It is estimated that ROW may begin in 2041-2050 and Construction may begin in 2046-2055. Funds are antcipated to be Federal/State funds.
11		I-10 & Beulah Rd. Interchange		$98,729,840	Underway with Local Funds	LRTP CFP in FY 16-20 with LOST Funds			Feasibility study concluding. This was funded with a Federal earmark and Escambia County local funds. PD&E and IJR to begin with Escambia County funds.
12		Escambia / Santa Rosa Beltway							This project is in the planning phase & is a project in the NWFCA Master Plan. The 2035 LRTP shows it as a need outside 2035.
13	220403-1	SR 87	SR 30 (US 98) to SR 10 (US 90)		Yes (2000)				Phase 62 currently open. All segments except through Eglin AFB are under construction or completed.
14	220436-1	Hwy 90 & Avalon Blvd			Yes (1996)	Plans complete 2004			Design done under 22-412-2. ROW in 2035 CFP in the 2021-2025 time period. Design will need update before construction.
15	220440-1	SR 30 (US 98)	Bayshore Rd to Portside Dr.		Yes (2002)	FY 08,09, and 10	Funded in FY 14/15 in the FY 14-18 TIP		
16		SR 727 Fairfield Drive	Lillian Highway to Mobile Highway (10A)		Yes (1999)				
17	416748-4	SR 87 PD&E Study Expansion	US 90 Capacity Improvements from intersection of US90/Glover Lane to intersection of US 90/SR 87S	$72,854,254	Underway (Funded with State / Federal funds in FY 14 in 10-14 TIP)	LRTP CFP in FY 21-25 and 31-35 with State / Federal funds	Funding for ROW is outside of current 2035 LRTP	Funding for Construction is outside of current 2035 LRTP	Project is currenty Priority 13 in Non-SIS Project Priorities. It is estimated that ROW may begin in 2036-2045 and Construction may begin in 2041-2050. Funds are anticipated to be Federal/State funds.

Projects shaded in yellow are currently in draft form and are expected to adopted at June 2014 TPO meeting as part of a LRTP amendment.

TABLE 2: FY14-18 NON-STRATEGIC INTERMODAL SYSTEM (NON-SIS) PROJECT PRIORITIES

PROJECT NAME	FROM	TO	IMPROVEMENT	Phases in Green are Cost Feasible with State/Federal Funds in the 2035 LRTP - Red phases are NOT Cost Feasible with State/Federal Funds	PRIORITY RANKING
ITS Master Plan Projects	$1,230,000 Annually ($1,230,000 for for 20 years = $24,600,000)				1
Corridor Management Plan/Studies	$130,000 Annually				2
Corridor Management Projects	$1,500,000 Annually				3
Public Transportation Capital Improvements	$300,000 Annually				4
Bicycle/Pedestrian Projects	$350,000 Annually				5
Traffic Signal Coordination	$300,000 Annually				6
Nine Mile Road	Pine Forest Rd	US 29	4 lanes	ROW - Funded FY14/15 Project # 2180652 Construction	7
Burgess Road	US 29	I-110 Overpass	4 lanes	ROW Construction	8
Pinestead-Longleaf Connector	Pine Forest Rd	US 29	4 lanes	ROW - Funded FY14/15 with Local Funds Project # 4210141 Construction	9
SR 87 North	CR 87A (Langley St.)	TPO Urban Boundary	4 lanes	DESIGN - Funded FY12/13 Project #4167482 ROW Construction	10
US 90	Glover Lane	SR 87 South	4 lanes	PD&E Design ROW Construction	11
US 98	Bayshore Drive	Portside Drive	6 lanes	ROW Construction	12
US 90	Avalon Boulevard	Stewart Street	6 lanes	ROW Construction	13
Nine Mile Road	I-10	Pine Forest Road	4 lanes	DESIGN ROW Construction	14
Gulf Beach Highway	Fairfield Drive	Navy Boulevard	4 lanes	DESIGN ROW Construction	15
Gulf Beach Highway	Blue Angel Parkway	Fairfield Drive	4 lanes	DESIGN ROW Construction	16
Sorrento Road	S. end of ICWW Bridge	N. end of ICWW Bridge	4 lanes	DESIGN ROW Construction	17
Sorrento Road	N. end of ICWW Bridge	Blue Angel Parkway	4 lanes	ROW- Funded FY15/16 with Local funds Project # 4210112- Priority for additional state/federal ROW funding Construction Cost Feasible with Local Funds Only	18
SR 87 Connector	SR 87 South	SR 87 North	4 lanes	DESIGN ROW Construction	19

4167483 SR 87N / SR 87S CONNECTOR NEW ALIGNMENT Non-SIS

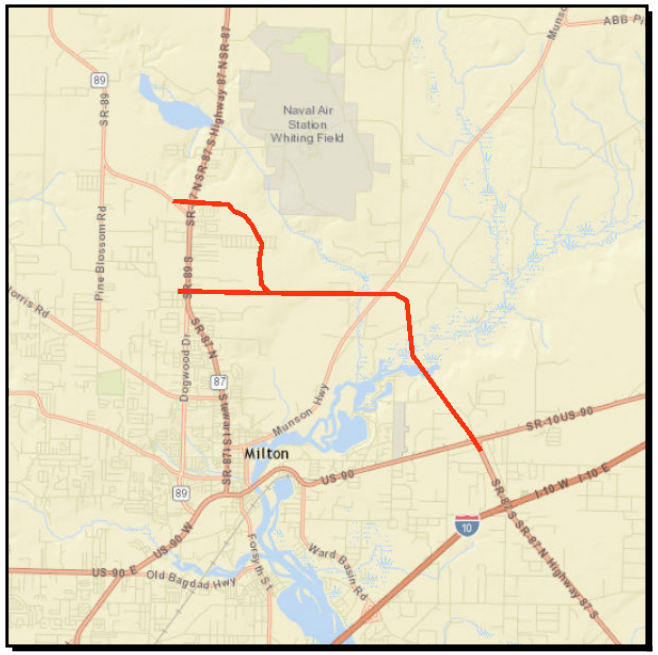

Work Summary: PRELIM ENG FOR FUTURE CAPACITY

From: North of Clear Creek Bridge

To: US 90/SR 87 S

Lead Agency: FDOT

Length: 13.949 MI

LRTP #: #54 in Amendment Report p. D-4

Phase	Fund Source	2015/16	2016/17	2017/18	2018/19	2019/20	Total
PE	DIH	0	0	0	43,309	0	**43,309**
PE	SA	0	0	0	4,330,931	0	**4,330,931**
Total		**0**	**0**	**0**	**4,374,240**	**0**	**4,374,240**

Prior Cost < 2015/16: 2,765,426

Future Cost > 2019/20: 0

Total Project Cost: 7,139,666

Project Description: Non-SIS Project Priority #17
Preliminary Engineering for the SR 87 Connector from North of Clear Creek Bridge to the Intersection of US 90 and SR 87S.

FDOT Work Program

Summary

Item Segment 416748-3

SR 87 Connector

ITEM SEGMENT OVERVIEW

Item Segment: 416748-3 Display Map
Description: SR 87S / SR 87N CONNECTOR NEW ALIGNMENT

Version Displayed:	AD (ADOPTED)	**As of:**	09/10/15, 17.06.13
Version Requested:	G1 (TENTATIVE)	**Managing District:**	03
Current Status:	010 - PRE-CONST.UNDERWAY 08/11/2008	**Geographic District:**	03
Transportation System:	INTRASTATE STATE HIGHWAY	**County:**	58 - SANTA ROSA
Box Item:	N	**Emergency:**	N
Work Mix:	9982 - PRELIM ENG FOR FUTURE CAPACITY	**Contract Type:**	1 - TO BE LET
Project Length:	13.949	**Measurement Type:**	E - ENGLISH
Project Manager:	PEGGY KELLEY	**Old Item:**	

Status History

Current:	010	PRE-CONST.UNDERWAY	08/11/2008
Prior:	005	ADOPTED, NOT BEGUN	08/07/2008
	000	CANDIDATE LINE ITEM	08/07/2008

Item Comments

03/26/04 PD&E COSTS FROM B.MARTIN PER T.BARFIELD $3.300

Item Segment Comments

PD&E STUDY FOR NEW ALIGNMENT OF NEW CONNECTION BETWEEN	(Misc)
SR 87S & SR 87N AT THE INTERSECTION OF US 90 TO WITHIN THE	(Misc)
VICINITY OF WHITING FIELD; FEDERAL EARMARKS SEE WP45	(Misc)
DESIGN INCLUDES TOLL ANALYSIS	(Misc)
2203 S.A. US90 SECTION OF STUDY FROM GLOVER LANE TO SR 87S	(Segment Comments)
FEDERAL EARMARKS PROGRAMMED;	(Segment Comments)
HPP 3903 (F296) REMAINING FUNDS OF $2,118,045; & SECTION	(Segment Comments)
129 EARMARK FROM APPROP.ACT 2008(F348)-$490,000;	(Segment Comments)
MUST CONTACT PM FOR ANY DESCRIPTION CHANGES	(Segment Comments)

Item Segment Groups

APP	POTENTIAL ADVANCED PRODUCTION
AP19	ADVANCED PRODUCTION 2019
EIS	ENVIRONMENTAL IMPACT STMT
ETDM	EFFICIENT TRNSPORTATN DECISION

FINANCIAL INFORMATION: Item Segment 416748-3

For details click on highlighted Financial Project or Phase Group; then use your Back button to return to this screen

Phase	Version	Scheduled Start Date	Financial Project	Status	Programmed	Authorized	Committed	Present Day Cost
PCR PD&E CONSULTANT	AD (ADOPTED)		416748-3-2C-01	Closed For Charges	$12,848	$12,848	$12,848.00	$12,848
PD&E IN-HOUSE	AD (ADOPTED)	06/15/2009	416748-3-21-01	Open For Charges	$129,265	$129,265	$127,872.10	$129,265
PD&E CONSULTANT	AD (ADOPTED)	06/15/2009	416748-3-22-01	Open For Charges	$2,218,542	$2,218,541	$2,218,538.63	$2,218,542
			416748-3-22-02	Open For Charges	$422,420	$422,420	$422,419.89	$422,420
			* Total Phase Group	PD & E	$2,783,075	$2,783,074	$2,781,678.62	$2,783,075
PE IN-HOUSE	AD (ADOPTED)	07/02/2018	416748-3-31-01	Never Opened	$43,309	$0	$.00	$43,309
PE CONSULTANT	G1 (TENTATIVE)	07/02/2018	416748-3-32-01	Never Opened	$7,830,931	$0	$.00	$7,830,931
			* Total Phase Group	PRELIMINARY ENGINEERING	$7,874,240	$0	$.00	$7,874,240
				** Grand Total	$10,657,315	$2,783,074	$2,781,678.62	$10,657,315

Related items for: Item Segment 416748-3

Below are listed related item types for this Items Segment. Click on the link(s) below to go to the Related Items Report

PROJECT COMPONENT (PC)

FEDERAL PROJECTS: Item Segment 416748-3

For details click on highlighted Federal Project; then use your Back button to return to this screen

Federal Project	Status	FAC	Description	%	Total Approved
SFT1-296-R	ACTIVE, 08/11/2008	LY20	HIGH PRIORITY PROJECTS - (#3677+) SAFETEA-LU	100.00	$2,444,059
		LY90	2008 SECT 129 CONSOLIDATED APPROPS ACT PL 110-161	100.00	$11,049
		LZ2E	EQUITY BONUS - SAFETEA-LU (SPECIAL O.A.)CR	100.00	$65,225
		L40E	CONGESTION MITIG-AQ - SAFETEA-LU-CR	100.00	$9,390
		L680	TCSP TRANSP, COMM & SYS PRESERVATION SAFETEA-LU	100.00	$2
		M400	CONGESTION MITIGATION & AIR QUALITY MAP-21	100.00	$1,477
			* Total Federal Project SFT1-296-R		$2,531,202
S129-348-R	ACTIVE, 08/08/2008	LY90	2008 SECT 129 CONSOLIDATED APPROPS ACT PL 110-161	100.00	$419,835
		L680	TCSP TRANSP, COMM & SYS PRESERVATION SAFETEA-LU	100.00	$2,585
			* Total Federal Project S129-348-R		$422,420

Appendix C: FEMA Flood Insurance Rate Maps (FIRM)

LEGEND

SPECIAL FLOOD HAZARD AREAS SUBJECT TO INUNDATION BY THE 1% ANNUAL CHANCE FLOOD

The 1% annual flood (100-year flood), also known as the base flood, is the flood that has a 1% chance of being equaled or exceeded in any given year. The Special Flood Hazard Area is the area subject to flooding by the 1% annual chance flood. Areas of Special Flood Hazard include Zones A, AE, AH, AO, AR, A99, V, and VE. The Base Flood Elevation is the water-surface elevation of the 1% annual chance flood.

ZONE A	No Base Flood Elevations determined.
ZONE AE	Base Flood Elevations determined.
ZONE AH	Flood depths of 1 to 3 feet (usually areas of ponding); Base Flood Elevations determined.
ZONE AO	Flood depths of 1 to 3 feet (usually sheet flow on sloping terrain); average depths determined. For areas of alluvial fan flooding, velocities also determined.
ZONE AR	Special Flood Hazard Area formerly protected from the 1% annual chance flood by a flood control system that was subsequently decertified. Zone AR indicates that the former flood control system is being restored to provide protection from the 1% annual chance or greater flood.
ZONE A99	Area to be protected from 1% annual chance flood by a Federal flood protection system under construction; no Base Flood Elevations determined.
ZONE V	Coastal flood zone with velocity hazard (wave action); no Base Flood Elevations determined.
ZONE VE	Coastal flood zone with velocity hazard (wave action); Base Flood Elevations determined.

FLOODWAY AREAS IN ZONE AE

The floodway is the channel of a stream plus any adjacent floodplain areas that must be kept free of encroachment so that the 1% annual chance flood can be carried without substantial increases in flood heights.

OTHER FLOOD AREAS

ZONE X Areas of 0.2% annual chance flood; areas of 1% annual chance flood with average depths of less than 1 foot or with drainage areas less than 1 square mile; and areas protected by levees from 1% annual chance flood.

OTHER AREAS

ZONE X Areas determined to be outside the 0.2% annual chance floodplain.

ZONE D Areas in which flood hazards are undetermined, but possible.

MAP SCALE 1" = 1000'

500 0 1000 2000 FEET

METER

COASTAL BARRIER RESOURCES SYSTEM (CBRS) AREAS

OTHERWISE PROTECTED AREAS (OPAs)

CBRS areas and OPAs are normally located within or adjacent to Special Flood Hazard Areas.

1% annual chance floodplain boundary

0.2% annual chance floodplain boundary

Floodway boundary

Zone D boundary

CBRS and OPA boundary

Boundary dividing Special Flood Hazard Area Zones and boundary dividing Special Flood Hazard Areas of different Base Flood Elevations, flood depths or flood velocities.

513	Base Flood Elevation line and value; elevation in feet*
(EL 987)	Base Flood Elevation value where uniform within zone; elevation in feet*

* Referenced to the North American Vertical Datum of 1988

A — A	Cross section line
23 - - - - - 23	Transect line
87°07'45", 32°22'30"	Geographic coordinates referenced to the North American Datum of 1983 (NAD 83), Western Hemisphere
76 N	1000-meter Universal Transverse Mercator grid values, zone 16
600000 FT	5000-foot grid ticks: Florida State Plane coordinate system, North zone (FIPSZONE 0903), Lambert Conformal Conic projection
DX5510 ×	Bench mark (see explanation in Notes to Users section of this FIRM panel)
● M1.5	River Mile

MAP REPOSITORY
Refer to listing of Map Repositories on Map Index

EFFECTIVE DATE OF COUNTYWIDE
FLOOD INSURANCE RATE MAP
DECEMBER 19, 2006

EFFECTIVE DATE(S) OF REVISION(S) TO THIS PANEL

For community map revision history prior to countywide mapping, refer to the Community Map History table located in the Flood Insurance Study report for this jurisdiction.

To determine if flood insurance is available in this community, contact your Insurance agent or call the National Flood Insurance Program at 1-800-638-6620.

This is an official copy of a portion of the above referenced flood map. It was extracted using F-MIT On-Line. This map does not reflect changes or amendments which may have been made subsequent to the date on the title block. For the latest product information about National Flood Insurance Program flood maps check the FEMA Flood Map Store at www.msc.fema.gov

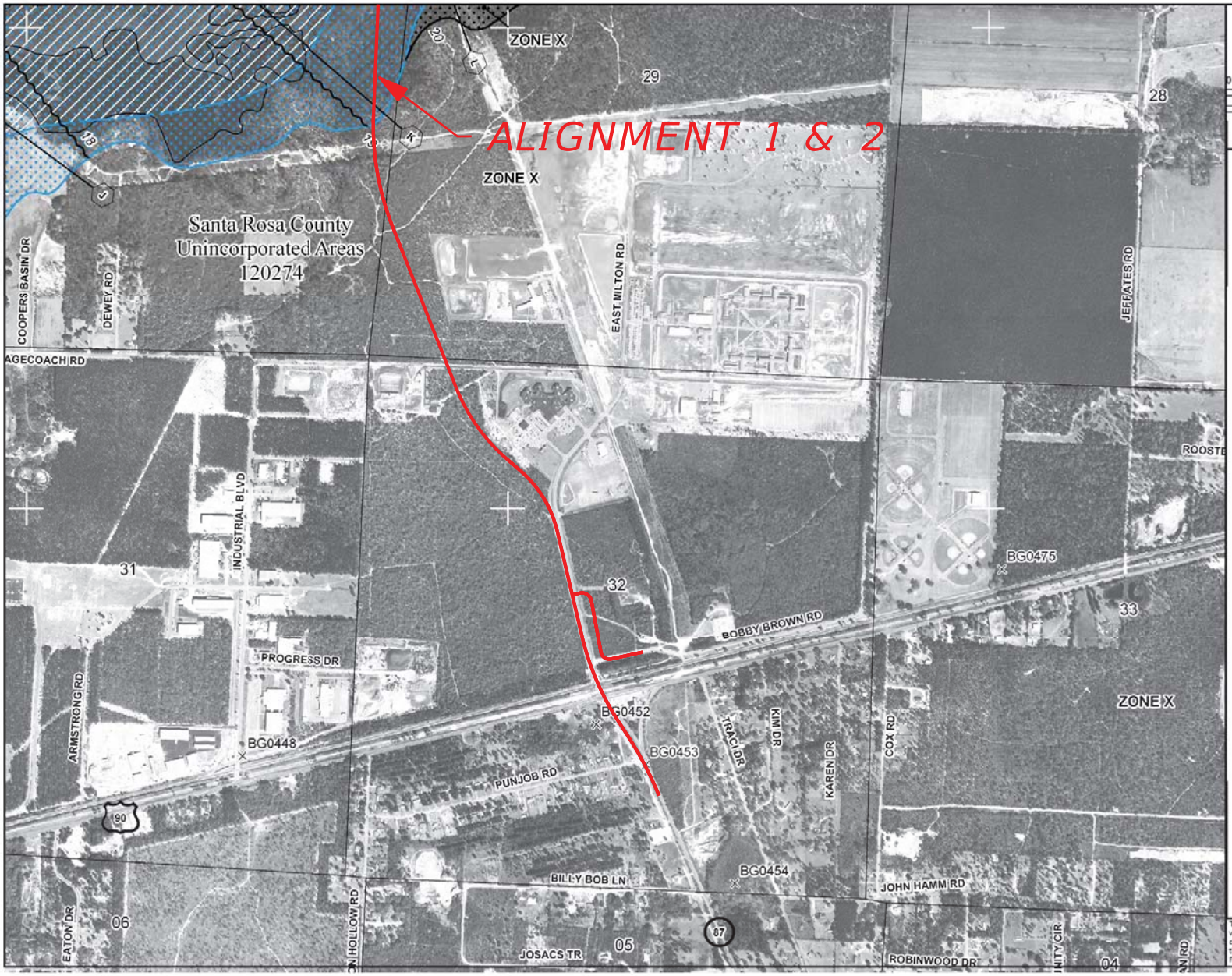

MAP SCALE 1" = 1000'

0 1000 2000 FEET

METERS

NFIP

NATIONAL FLOOD INSURANCE PROGRAM

PANEL 0340G

FIRM

FLOOD INSURANCE RATE MAP

SANTA ROSA COUNTY, FLORIDA
AND INCORPORATED AREAS

PANEL 340 OF 657

(SEE MAP INDEX FOR FIRM PANEL LAYOUT)

CONTAINS:

COMMUNITY	NUMBER	PANEL	SUFFIX
SANTA ROSA COUNTY	120274	0340	G

Notice to User: The **Map Number** shown below should be used when placing map orders; the **Community Number** shown above should be used on insurance applications for the subject community.

MAP NUMBER
12113C0340G

EFFECTIVE DATE
DECEMBER 19, 2006

Federal Emergency Management Agency

This is an official copy of a portion of the above referenced flood map. It was extracted using F-MIT On-Line. This map does not reflect changes or amendments which may have been made subsequent to the date on the title block. For the latest product information about National Flood Insurance Program flood maps check the FEMA Flood Map Store at www.msc.fema.gov

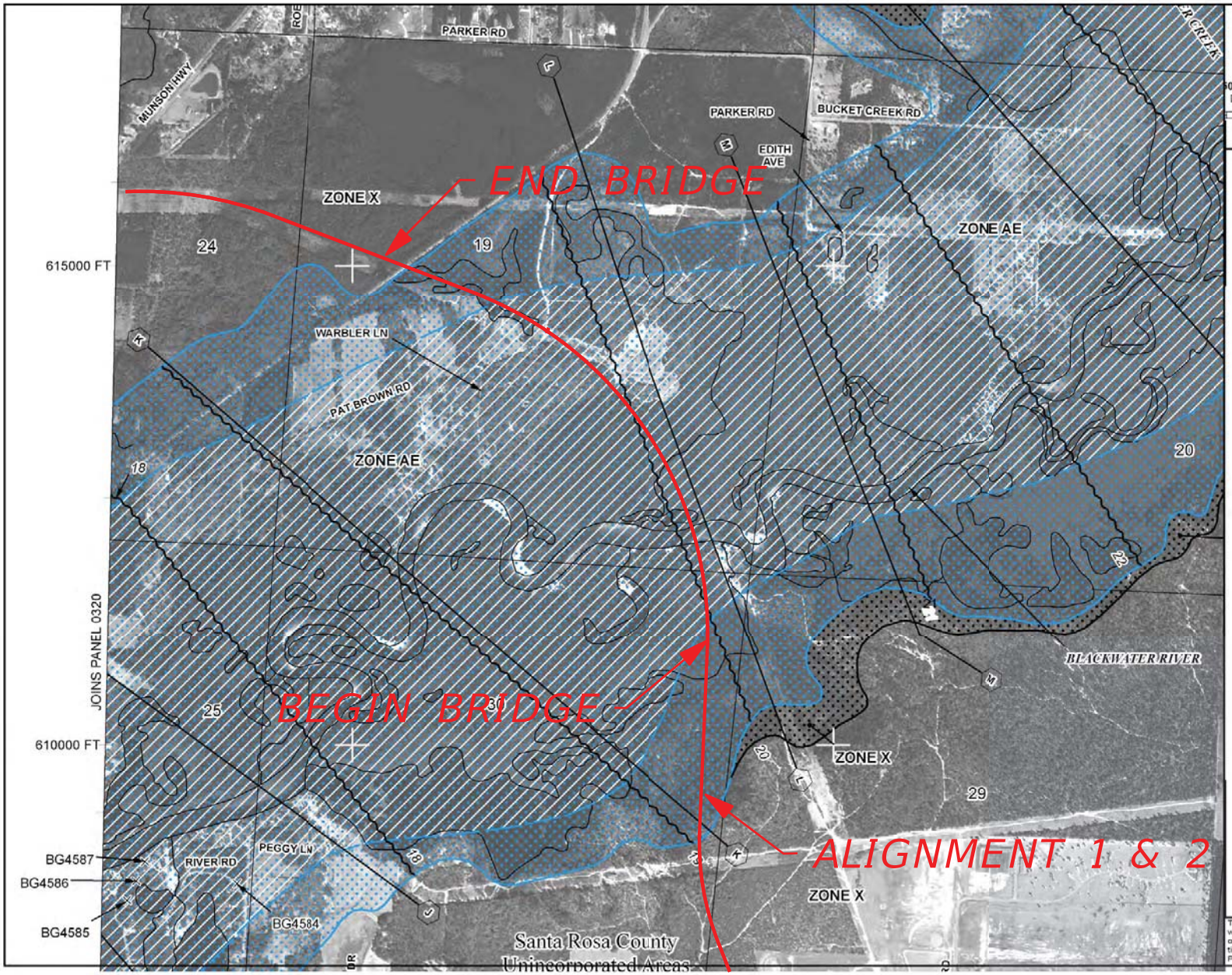

MAP SCALE 1" = 1000'

500 0 1000 2000 FEET

METER

NFIP

NATIONAL FLOOD INSURANCE PROGRAM

PANEL 0340G

FIRM

FLOOD INSURANCE RATE MAP

SANTA ROSA COUNTY, FLORIDA
AND INCORPORATED AREAS

PANEL 340 OF 657

(SEE MAP INDEX FOR FIRM PANEL LAYOUT)

CONTAINS:

COMMUNITY	NUMBER	PANEL	SUFFIX
SANTA ROSA COUNTY	120274	0340	G

Notice to User: The **Map Number** shown below should be used when placing map orders; the **Community Number** shown above should be used on insurance applications for the subject community.

MAP NUMBER
12113C0340G

EFFECTIVE DATE
DECEMBER 19, 2006

Federal Emergency Management Agency

This is an official copy of a portion of the above referenced flood map. It was extracted using F-MIT On-Line. This map does not reflect changes or amendments which may have been made subsequent to the date on the title block. For the latest product information about National Flood Insurance Program flood maps check the FEMA Flood Map Store at www.msc.fema.gov

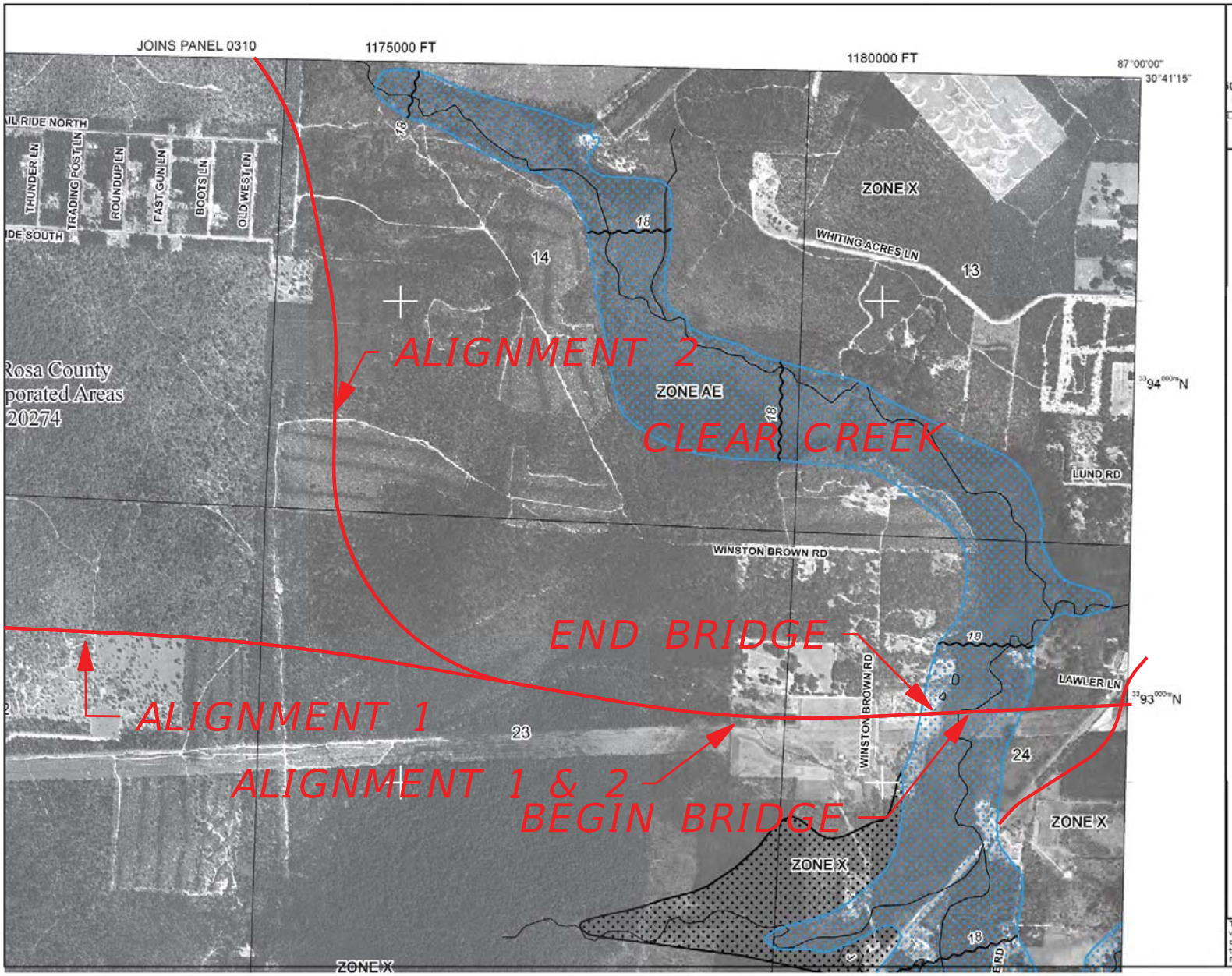

MAP SCALE 1" = 1000'

500 0 1000 2000 FEET

METER

NFIP

NATIONAL FLOOD INSURANCE PROGRAM

PANEL 0320G

FIRM

FLOOD INSURANCE RATE MAP

SANTA ROSA COUNTY, FLORIDA
AND INCORPORATED AREAS

PANEL 320 OF 657

(SEE MAP INDEX FOR FIRM PANEL LAYOUT)

CONTAINS:

COMMUNITY	NUMBER	PANEL	SUFFIX
MILTON, CITY OF	120276	0320	G
SANTA ROSA COUNTY	120274	0320	G

Notice to User: The **Map Number** shown below should be used when placing map orders; the **Community Number** shown above should be used on insurance applications for the subject community.

MAP NUMBER
12113C0320G

EFFECTIVE DATE
DECEMBER 19, 2006

Federal Emergency Management Agency

This is an official copy of a portion of the above referenced flood map. It was extracted using F-MIT On-Line. This map does not reflect changes or amendments which may have been made subsequent to the date on the title block. For the latest product information about National Flood Insurance Program flood maps check the FEMA Flood Map Store at www.msc.fema.gov

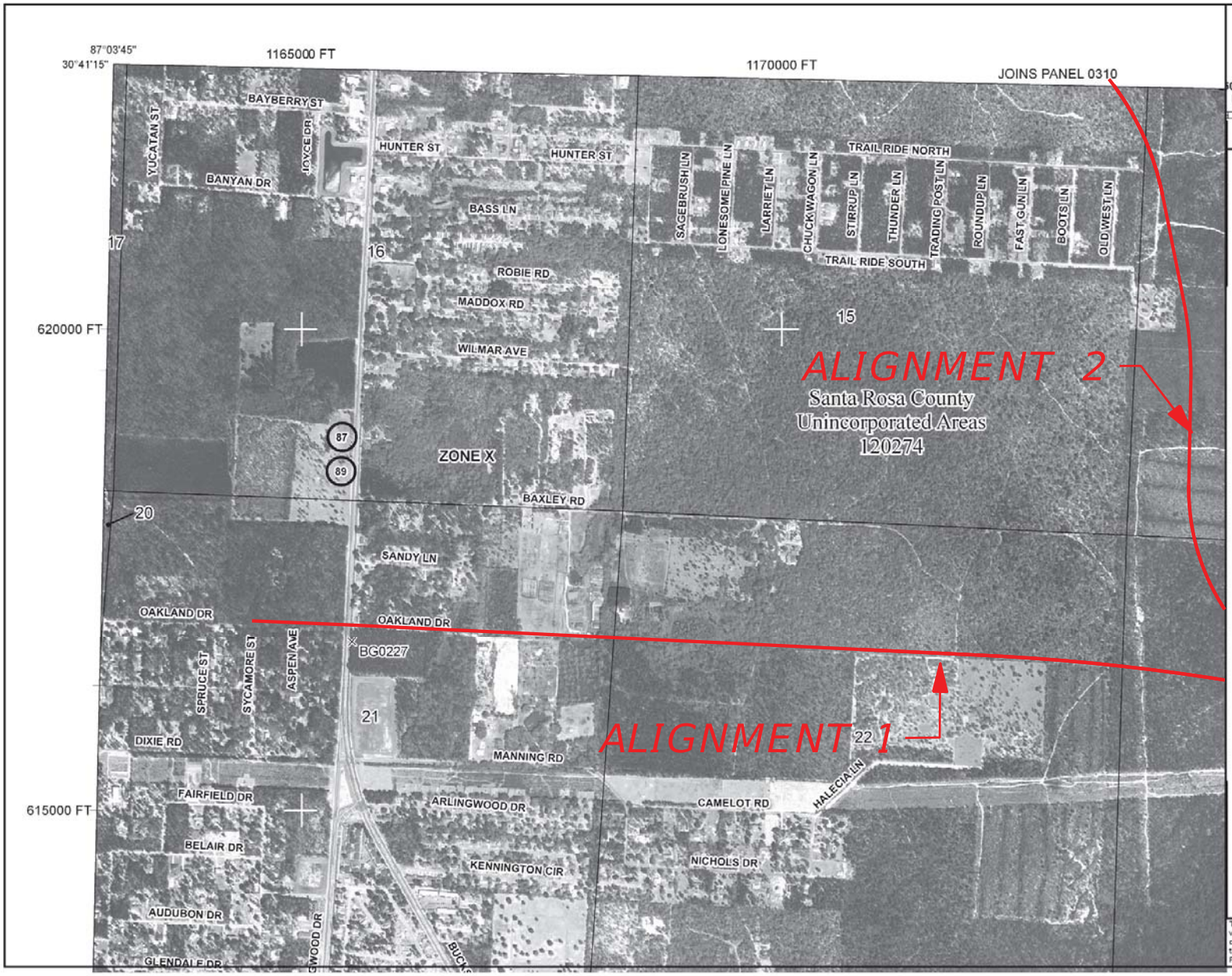

MAP SCALE 1" = 1000'

500 0 1000 2000 FEET

METER

NFIP

NATIONAL FLOOD INSURANCE PROGRAM

PANEL 0320G

FIRM

FLOOD INSURANCE RATE MAP

SANTA ROSA COUNTY, FLORIDA
AND INCORPORATED AREAS

PANEL 320 OF 657

(SEE MAP INDEX FOR FIRM PANEL LAYOUT)

CONTAINS:

COMMUNITY	NUMBER	PANEL	SUFFIX
MILTON, CITY OF	120276	0320	G
SANTA ROSA COUNTY	120274	0320	G

Notice to User: The **Map Number** shown below should be used when placing map orders; the **Community Number** shown above should be used on insurance applications for the subject community.

MAP NUMBER
12113C0320G

EFFECTIVE DATE
DECEMBER 19, 2006

Federal Emergency Management Agency

This is an official copy of a portion of the above referenced flood map. It was extracted using F-MIT On-Line. This map does not reflect changes or amendments which may have been made subsequent to the date on the title block. For the latest product information about National Flood Insurance Program flood maps check the FEMA Flood Map Store at www.msc.fema.gov

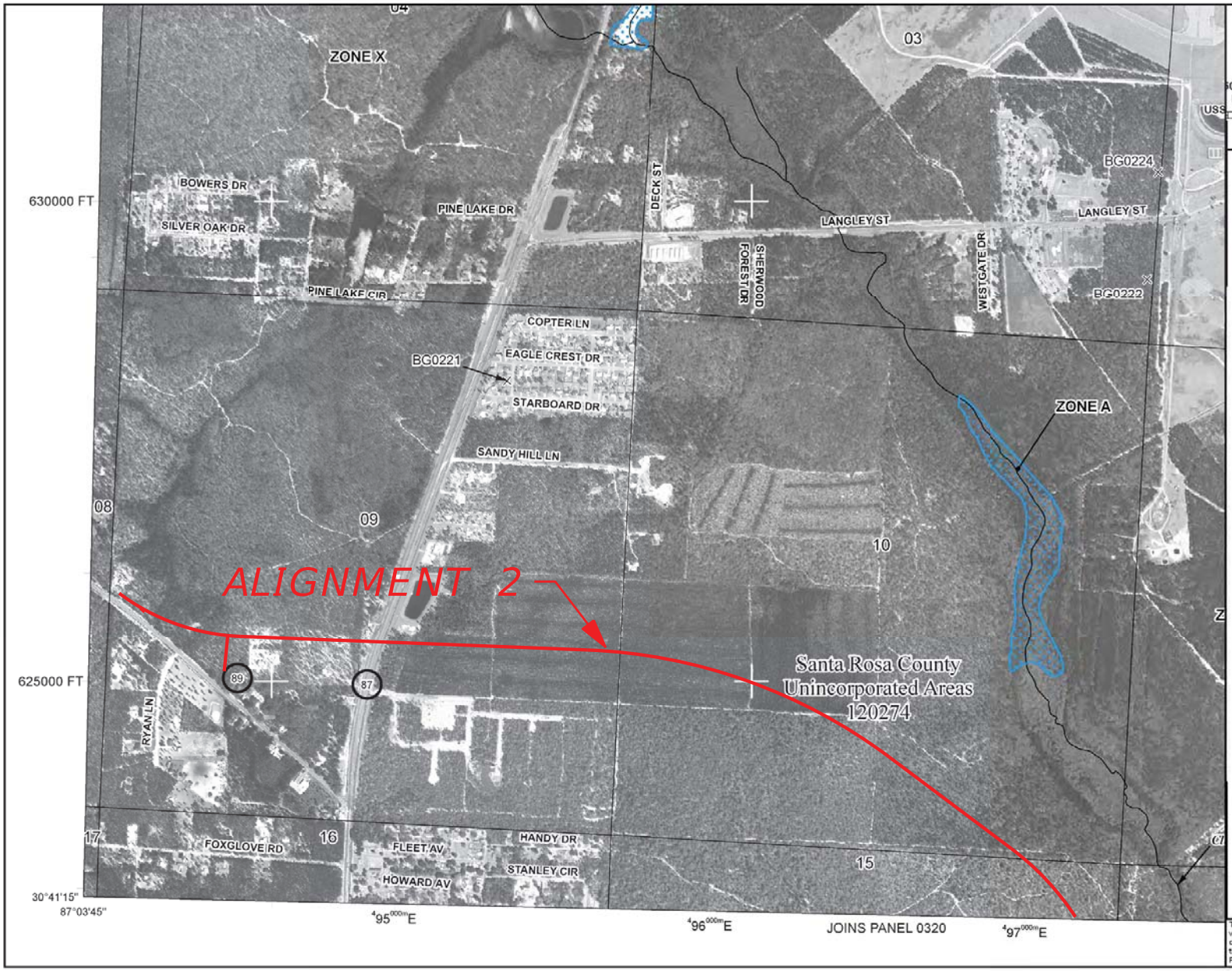

MAP SCALE 1" = 1000'

500 0 1000 2000 FEET

METER

NFIP

NATIONAL FLOOD INSURANCE PROGRAM

PANEL 0310G

FIRM

FLOOD INSURANCE RATE MAP

SANTA ROSA COUNTY, FLORIDA
AND INCORPORATED AREAS

PANEL 310 OF 657

(SEE MAP INDEX FOR FIRM PANEL LAYOUT)

CONTAINS:

COMMUNITY	NUMBER	PANEL	SUFFIX
SANTA ROSA COUNTY	120274	0310	G

Notice to User: The **Map Number** shown below should be used when placing map orders; the **Community Number** shown above should be used on insurance applications for the subject community.

MAP NUMBER
12113C0310G

EFFECTIVE DATE
DECEMBER 19, 2006

Federal Emergency Management Agency

This is an official copy of a portion of the above referenced flood map. It was extracted using F-MIT On-Line. This map does not reflect changes or amendments which may have been made subsequent to the date on the title block. For the latest product information about National Flood Insurance Program flood maps check the FEMA Flood Map Store at www.msc.fema.gov

Appendix D: Corridor Alternatives Evaluation Report

CORRIDOR ALTERNATIVES EVALUATION SUMMARY REPORT

SR 87 CONNECTOR PD&E STUDY

From SR 87S at US 90 to SR 87N at Southridge Road
Santa Rosa County, Florida

FINANCIAL PROJECT NUMBERS:
4167483-22-01; 4167483-22-02; 4167484-22-01; 4167484-22-02; and 4167484-22-90

Prepared for:

Florida Department of Transportation

and

Federal Highway Administration

Prepared by:

METRIC ENGINEERING

December 2010

Revised: 1/20/2011
Up-dated 6/08/2011
Rev. 10/3/2011
Rev. 12/7/2011

Table of Contents

Section	Title	Page
1.0	**PROJECT HISTORY**	**1**
1.1	Purpose and Need for the Project	4
1.2	Project Study Area	4
1.3	Corridor Build Alternatives	5
1.4	Prior Studies	6
1.5	Efficient Transportation Decision Making	6
2.0	**ALTERNATIVE BUILD CORRIDORS**	**10**
2.1	Corridor Descriptions	10
2.2	Proposed Build Corridor Roadway Design	12
2.3	Storm Water Management Designs	16
2.4	Proposed Build Corridor Bridge Designs	16
3.0	**EVALUATION OF BUILD CORRIDORS**	**20**
3.1	Evaluation Criterion for the Project's Purpose and Need	20
3.2	Traffic	30
3.3	Alternative Build Corridors Potential Environmental Impacts	38
3.4	Cultural Resource Assessment Survey	47
3.5	Social Impacts	49
3.6	Alternative Build Corridors Estimated Costs	52
4.0	**PUBLIC INVOLVEMENT AND COORDINATION**	**53**
5.0	**CORRIDOR EVALUATION SUMMARY**	**55**
APPENDICES		

Table of Figures

Figure	Title	Page
1.1	Aviation Park	2
1.2	Study Area Map	5
1.3	Corridor Alternatives	5
2.1	Corridor Maps	11
2.2	Interim Urban Typical	13
2.3	Build-out Urban Typical (4-Lane Arterial)	13
2.4	Interim Suburban Typical	14
2.5	Build-out Suburban Typical (4-Lane Arterial)	15
2.6	Power-line easement (Corridors 1, 2, & 3)	16
2.7	Corridors 4, 5 and 6 Crossing	17
2.8	Non-Navigable Regions	18
2.9	Bridge Typical Section	19
3.1	Blackwater Heritage Trail	24
3.2	US 90 Historic Trail	24
3.3	Aviation Park	26
3.4	Areas of Economic Development	27
3.5	LOS by Roadway Segment	32
3.6	Environmental Concerns	40
3.7	Integrated Wildlife Habitat Rankings	41
3.8	Northern Noise Sensitive Sites	45
3.9	Southern Noise Sensitive Sites	46
3.10	Historic SR 1 Trail	47
3.11	Corridor 3 Impacted Residences	50

Table of Tables

Table	Title	Page
3.1	Purpose and Need Comparison	28
3.2	Daily LOS 2035 (2035) (2-lane undivided configuration)	34
3.3	Daily LOS 2035 (2035) (4-lane undivided configuration)	35
3.4	Comparison (2-lane vs. 4-lane divided) of Project Traffic Volumes (2035)	36
3.5	Network Segment Performance	Appendix D
3.6	Vehicle Miles Travelled Reduction	37
3.7	Traffic Evaluation Comparison	37
3.8	Environmental Comparison	39
3.9	Noise Sensitive Sites	45
3.10	Cultural Impacts	49
3.11	Social Impacts	49
3.12	Environmental Analysis Summary	51
3.13	Summary of Costs for Alternative Build Corridors (in millions)	52
5.1	Final Evaluation Summary	55

1.0 PROJECT HISTORY

The Florida Department of Transportation is conducting a study to evaluate potential corridors that would connect SR 87S at US 90 east of Milton to SR 87N in Milton or north of Milton. The primary objectives in the extension of SR 87S is to facilitate north/south traffic movement to more effectively serve freight movement and to provide for a more direct hurricane evacuation route from the coast to areas north in Alabama. It also is the intent to reduce congestion in the City of Milton, and to alleviate travel demand on the section of US 90 currently shared by SR 87. Versions of this project have gone through ETDM screening as ETDM Project # 2861 in 2008. However, that project was much more limited in scope and only evaluated a corridor from SR 87S to Munson Highway.

SR 87 is the main north-south artery of Santa Rosa County. It links Milton at US 90 with US 98 at Navarre to the south and Alabama (transitions to Alabama 41 en route to Brewton then on to I-65) to the north. It also serves as a corridor for freight movement north to I-65 as well as a vital evacuation route for northbound traffic. During times of hurricane force winds, both the Escambia Bay Bridge and the Garcon Point Bridge close, leaving SR 87 north to the interstate and beyond as the only access out of the beach areas like Gulf Breeze and Navarre, and it is the only access into the area for Emergency First Responders. However, with a portion of the current alignment travelling along a congested portion of US 90 through historic downtown Milton, it cannot function as a contiguous facility. Future growth will continue to constrain this portion of the roadway. As reported in the *Haas Center's Impact of Economic Development in Santa Rosa County*, the County has grown 173% since 1980 and is expected to grow another 92% by 2030. This increase will put further demand on this roadway, making growth and evacuation difficult due to a lack of capacity on US 90. As a result, Santa Rosa County's Capital Improvements Schedule, includes Policy 4.1.E.3, *"The County shall continue to request, recommend, and support immediate roadway improvements in order to relieve the congestion on the segment of US 90 between Canal Street and SR 87S".*

1.1 Purpose and Need for the Project

This project is needed to provide for a new roadway facility linking SR 87S with SR 87N. This will serve as an alternative to the existing shared facility of SR 87 and US 90, which is a constrained facility that is currently operating at a failing level of service (LOS F). Therefore, the primary need for this new corridor is to provide additional capacity, and to improve regional connectivity by providing a more direct route from areas of high growth in northern Santa Rosa County, such as the Berryhill Road area, to I-10 and to areas further to the south. Likewise, access will be improved to and from I-10 for the Whiting Field U.S. Naval Air Station, and the County's Joint Use Planning Area near Whiting Field. It is also anticipated that this new roadway facility would provide relief to Ward Basin Road and its intersection with US 90. It is also intended to provide much needed relief to the US 90 Blackwater Bridge.

1.1.1 Emergency Evacuation

SR 87 serves as a vital evacuation route for northbound traffic destined for I-65 in Alabama. During times of hurricane force winds, both the Escambia Bay Bridge and the Garcon Point Bridge close leaving SR 87 north to the interstate and beyond as the only access out of the beach areas like Gulf Breeze and Navarre, and is the only access into the area for Emergency First Responders. However, with a portion of the current alignment travelling along a congested portion of US 90, through historic downtown Milton, it cannot function as a contiguous roadway. The project will address future projected deficiencies on an established emergency hurricane evacuation route.

1.1.2 Multi-modalism

The project will also address the need for greater bicycle and sidewalk connectivity within the County with possible connections with the Blackwater Heritage Trail, enabling area resident's direct access. Unfortunately, Escambia County Area Transit does not provide service to this area of Santa Rosa County; however, in the future if such services were to be provided, the proposed facility would offer greater opportunities in regional network systems for transit. Finally, connection to the proposed Whiting Aviation Park will be considered. This park will be located on the east side of Whiting Field and will include a 6,000 ft runway currently under a joint use agreement with the Naval Base. See Figure 1.1

Figure 1.1 Aviation Park

1.1.3 Social Demand and Economic Development

Santa Rosa County is not only a bedroom community to the greater Pensacola area, but in its own right, has also been experiencing considerable population growth. This growth has spurred the need for an improved roadway network. In addition, major traffic generators in the area such as new residential developments, the Santa Rosa Criminal Justice Center, the Santa Rosa Corrections Facility, the Whiting Field U.S. Naval Air Station, the Team Rosa Joint Planning area near Whiting Field, and the Santa Rosa Commerce Park on the US 90 corridor, would all benefit from the capacity this facility will provide. The need for the project is also related to committed trips associated with future development in the northern portions of Santa Rosa County, as well as, the future development on the US 90 corridor, which is hindered by the existing capacity limits of US 90.

1.1.4 Future Growth

As reported by the US Census Bureau 2010 Report, Santa Rosa County continues to be among the fastest growing counties in Florida. The county population has grown 150% (from just under 60,000 to over 150,000 people) from 1980 to 2010.

According to the University of Florida's Bureau of Economic and Business Research (BEBR) Report and the FL-AL Transportation Planning Organization's (TPO) 2035 Long Range Transportation Plan (LRTP), the population is expected to grow another 45% to nearly 220,000 people by 2035. This population growth will put further demand on the US 90/SR 87 segment, making growth and evacuation difficult due to a lack of roadway capacity.

In Traffic Analysis Zones adjacent to the corridor, population is anticipated to grow by 2,648 from 2,029 to 4,677, or 131 percent, between 1997 and 2020. Employment is projected to increase by 575 from 908 to 1,483, or 63 percent. The number of dwelling units is forecasted to rise by 1,114 from 827 to 1,941, or 135 percent. This projected growth is based on the 2035 Cost Feasible Transportation Model that was adopted in 2011 and accounts for the economic downturns of the past 3 years.

1.1.5 Traffic Data

According to the Santa Rosa County Comprehensive Plan, the current adopted Level of Service (LOS) standard for US 90 is D. In 2008, US 90 from Ward Basin Road to SR 87N had a failing level of service. Without the proposed improvement, the operating conditions will continue to deteriorate. The Raw Model Volume for the FL-AL TPO 2020 Needs Plan for this new segment was 9,472 vpd. This would provide much needed relief to US 90. In a more recent modeling analysis done in the SR 87 PD&E Connector Preliminary Traffic Report, dated September 2010, the volumes for the new segment are approximately 14,500 vpd. Traffic analysis is based on the adopted 2035 NWFRPM Cost Feasible Model. A sub-area model refinement has been performed and an updated traffic analysis is being undertaken for the final Traffic Memorandum but no significant changes to the previous results are anticipated.

1.1.6 Safety/Crash Rates

The information below contains crash data from the period of 2004 thru 2009 according to Florida Department of Transportation TSAT data base.

On SR 87 south, from I-10 to US 90, between mile points 18.500 (I-10) and 19.769 (US 90), there were a total of 86 crashes, 47 of those were with injuries, and 39 with property damage only. The majority of the crashes in this segment occurred at the US 90/SR 87S intersection.

On US 90, from SR 87 south to SR 87 north, between mile points 11.610 and 16.202, there were a total of 234 crashes, 144 of those were with injuries, 1 fatality and 89 with property damage only. The majority of these crashes were distributed throughout the segment. There was, however, a slightly higher concentration of crashes at the US 90/SR 87N intersection. The single fatality in the segment occurred at milepost 13.847 just east of Ward Basin Road.

On SR 87N, from US 90 to Southridge Road, between mile points 0.004 and 11.362, there were a total of 166 crashes, 113 of those were with injuries, and 53 with property damage only. As with the segment along US 90, the majority of these crashes were distributed throughout the segment. There was, however, a slightly higher concentration of crashes at the US 90/SR 87N intersection.

The SR 87 Connector will include a new roadway to connect SR 87S and SR 87N. Presently, the SR 87 corridor follows along US 90, a congested roadway, for five miles. This portion of the corridor is operating at a LOS F and is the area where the only fatality in the corridor occurred. Improvements to the existing roadway in this vicinity are difficult due to the historic downtown Milton area. By developing a new corridor that does not follow the existing US 90 alignment, the traveler would be able to avoid this high traffic area.

1.1.7 Plan Consistency

The proposed new facility is consistent with the Santa Rosa County Comprehensive Plan, and is also referenced in the County's Capital Improvements Schedule in Policy 4.1.E.3. The Comprehensive Plan design year for this facility is currently 2025, although as the project moves through the next study phase and a formal forecast traffic report is completed, the design year will change to allow for a standard twenty year forecast year to comply with federal guidelines (Design Year 2035).

Likewise, the proposed new facility is in the proposed Transportation Improvement Plan (TIP) Appendices and in the current adopted State Transportation Improvement Plan (STIP) and current adopted TPO TIP 2009-2013. The current (adopted 2011) STIP includes Preliminary Engineering Funds for the year 2012 totaling nearly $1.9M. It was also included in the TPO's 2025 LRTP, as well as in the current 2035 LRTP Update as the SR 87 Connector or as part of the larger Outer Beltway Connector. It is listed as a Roadway Capacity Project in the Needs Plan as SR 87 Connector and in the "Beyond 2035" Projects as the Outer Beltway Connector. The Design phase is also listed in the Fiscal Year 2016-2020 Year of Expenditure Cost Feasible Plan in the latest LRTP.

1.2 Project Study Area

In an effort to improve emergency evacuation, and to more effectively meet area commuter's needs, the Florida Department of Transportation is conducting this Project Development and Environment Study to evaluate the potential for providing a new corridor for the missing link of SR 87. The study area, as shown in Figure 1.2, extends from a southern boundary just north of I-10 along SR 87S; to the intersection of Southridge Road and SR 87N to the north; just west of SR 87N to the west; and just east of SR 87S to the east.

1.3 Corridor Build Alternatives

In addition to the No-build alternative and the Transportation System Management (TSM) alternative along the existing alignment, a number of new corridors will be identified and evaluated for improved mobility and safety. See Figure 1.3. Corridor Alternatives.

Segmentation

As shown below, the corridors have been divided up into segments, such as a, b, c, etc. This has been done to show segments of the roadway that are common to multiple Corridor Alternatives. For example Segment 1a is common to all three Corridors 1, 2, and 3. Segment 1b is common to Corridors 1 and 2. Likewise, on the Corridors to the south, segment 4a is common to all three Corridors 4, 5, and 6.

The Corridor segment make up are as follows:

Corridor 1 (Segments 1a+1b+1c)
Corridor 2 (Segments 1a+1b+2a)
Corridor 3 (Segments 1a+3a)
Corridor 4 (Segments 4a+4b)
Corridor 5 (Segments 4a+5a)
Corridor 6 (segments 4a+4b+6a)

Figure 1.2 Study Area Map

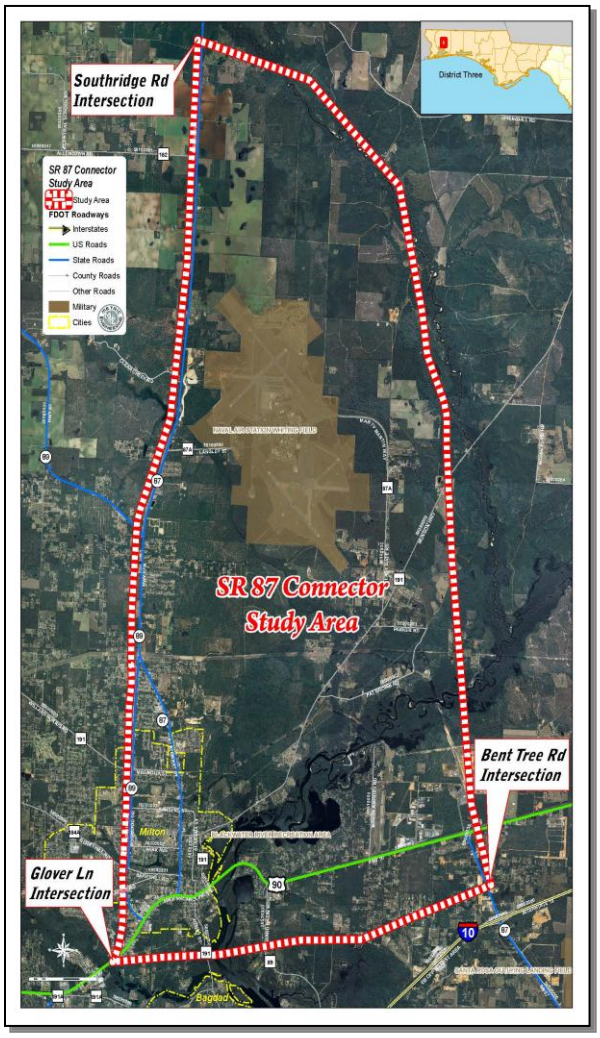

Figure 1.3 Corridor Alternatives

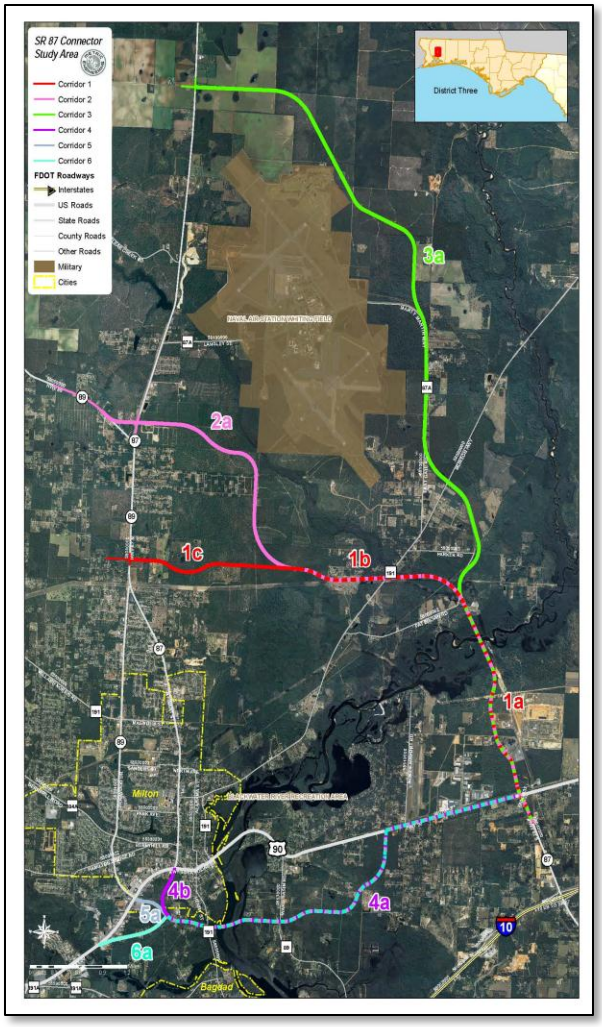

1.4 Prior Studies

After researching available information and/or meeting with representatives from the County, City of Milton, Whiting Field, Sheriff's Department, Northwest Florida TPO, West Florida Regional PC, North West Florida Corridor Authority, Correction Facility, etc, we found that this project has been reviewed and studied for many years under a variety of names. The FAST (Florida Alabama Strategic Task Force) studied this project calling it "Brewton to the Beaches'; the County includes it in the 'Better Santa Rosa Plan'; Team Santa Rosa includes it as part of their future planning; and the Corridor Authority, the County, and the Planning Council include this project as the eastern leg of the overall Beltway Project that spans both Escambia and Santa Rosa County in their Long Range Plans and Cost Feasible Projects. In addition, the Beltway Project was also studied by the Turnpike Enterprise. Their findings showed that there was enough demand for a roadway in our study area with a toll road being very close to being a feasible project. An ETDM review was done in February 2008. ETDM #2861 only looked at a potential corridor that went from SR 87S/US 90 to Munson Highway. It was the intent that this segment be the first phase of a corridor that would be extended to SR 87N. The corridor generally followed the route of Corridor 1 of this study.

1.5 Efficient Transportation Decision Making

On December 19, 2009, the ***SR 87 Connector*** project was submitted for ETDM review as Project #12597. Initially, five corridors were to be studied, with Corridor 4 having two different termini. In addition, these corridors were segmented to enhance the initial GIS review.

It should be noted, due to the limitations of discerning the different segments and termini within the Environmental Screening Tool, the Corridors were renamed in the ETDM as follows:

1.	*Corridor 1 – 1a+1b+1c*	*4.*	*Corridor 4 – 4a+4b*
2.	*Corridor 2 – 1a+1b+2a*	*5.*	*Corridor 5 – 4a+5a*
3.	*Corridor 3 – 1a+3a*	*6.*	*Corridor 6 – 4a+4b+6a*

The six corridors that are reflected in this report were evaluated. Of the six corridors, four were identified as having a Dispute Resolution degree of effect. Corridor 3 was issued a dispute by the Florida Department of Environmental Protection (DEP) due to the fact the Corridor's preliminary alignment is through parcels planned to be purchased as part of the Clear Creek/Whiting Field Florida Forever project. In addition, the planned corridor was to be co-located within a portion of the Blackwater River Heritage Trail, which DEP staff determined a dispute would be constituted since it would need to involve the Section 4(f) process.

Dispute Resolution

The Project Team and the FDOT Project Manager met with DEP, the Florida Department of State Lands (DOS), and the Office of Greenways and Trails (OGT) on **March 24, 2010** for the first attempt for mitigation of the disputes and to see if DEP would remove the dispute on Corridor 3 due to traversing lands planned to be purchased, but not yet owned. It was DEP's position that regardless of the ownership issue, the corridor and its secondary impacts orphaned a parcel that had already been purchased as part of the Clear Creek/Whiting Field Florida Forever project and therefore warranted the dispute.

Dispute Resolution Meetings

- **March 24, 21010 (FDEP, OGT, DOS, WFWMD)**
- **May 21, 2010 (FDEP, OGT, DOS, WFWMD)**

In a meeting with the Federal Highway Administration (FHWA) on **March 25, 2010**, FHWA staff stated that simply crossing the Blackwater River Heritage Trail and the Old US 90 Historic Trail would not constitute Section 4(f) involvement, but collocating and utilizing the trail right-of-way would. To address this conflict, Corridor 3 has been adjusted to simply cross the trail as in the case with the other five corridors.

The other three corridors that were issued a dispute were Corridors 4, 5, and 6, or commonly referred to as the southern corridors. In this case, the issuing agency was the Northwest Florida Water Management District (NWFWMD). The proposed three corridors directly impacted Florida Forever Lands adjacent to and within the Blackwater River that are owned by NWFWMD.

The agency reviews were completed in the spring of 2010 and the ETDM Summary Report was completed and published on May 12, 2010.

On **May 21, 2010**, another mitigation meeting was held with the FDEP, DOS, OGT, and NWFWMD to: review a modified alignment for Corridor 3, discuss whether there may be any flexibility on the NWFWMD properties, and to discuss answers to questions formulated by FDOT and the Project Team. The result of the meeting was that DEP maintained their position on Corridor 3. Likewise on May 21, 2010 a discussion regarding Corridors 4, 5, and 6 was conducted concerning the complexities associated with the funding used to purchase the NWFWMD lands through the Florida Forever Program, there were no options available that would allow for these corridors to impact the NWFWMD lands as long as there were other viable corridors.

On **March 29, 2011,** the Project Team met with FHWA and it was determined the Department of Transportation will be evaluating all three northern Corridors associated

with the SR 87 Connector PD&E Study. The NEPA process requires the evaluation of more than one Corridor, along with the No Build, through the alternatives phase.

It was stipulated that any viable corridor that meets the project's purpose and need, and has no fatal flaw, be carried forward for further evaluation in the alternatives phase of this study. In evaluating the northern corridors (Corridor's 1, 2, and 3) it was determined these corridors met the stipulated criteria. During the meeting, the red-flag condition imposed on Corridor 3 by DEP was discussed and whether it constituted a fatal flaw. The **FHWA Staff stated that it was not a fatal flaw** as the red-flag had been imposed on property owned by others beyond the jurisdiction of DEP.

On March 29, 2011, FHWA concluded that the southern alignments should be eliminated for further evaluation due to their impacts to the Water Management District's Florida Forever parcels, as this was determined to be a fatal flaw for the corridors, and due to the results of the dispute resolution.

As of June 30, 2011, the Florida Department of Environmental Protection, using Florida Forever Funds, purchased several parcels that are part of the Clear Creek/Whiting Field Florida Forever Board of Trustees Project. The path of Corridor 3 traverses these recently purchased parcels. In addition, the purchase of these parcels closes the gap in any physically viable corridor that would allow passage northeast of the Whiting Field Naval Air Station that would meet the Purpose and Need for the SR 87 Connector.

Article X, Section 18 of the Florida Constitution (as amended in 1998), states dispositions of state-owned conservation lands are restricted to those lands "no longer needed for conservation purposes". It would be unreasonable to meet the criteria that would establish that the land is no longer needed for conservation when the parcels are in fact part of an existing conservation master plan, and it was just established that the land was of significant conservation quality to be eligible for the Florida Forever Funding.

In some cases, linear facilities are permitted on Florida Forever Lands. Such approvals are made by the **Board of Trustees of the Internal Improvement Trust Fund** who is responsible for the protection and management of such lands. However, on January 23, 1996 the Board of Trustees approved a Policy for the Use of Natural Land by Linear Facilities that stipulates in **Section (C) Avoidance** that *"owners and operators of linear facilities **must avoid location on natural resource lands unless no other practical and prudent alternative is available** and all steps to minimize impacts are set forth below are implemented. The test of practicality and prudence will compare the social, economic, and environmental effects of the alternatives".*

Based on the stipulations noted above, the fact that there are other viable Corridors (Corridors 1 and 2), the opportunities to impact the DEP lands as a linear facility would also be precluded.

It is due to these limitations, along with the other restrictions and prohibitions provided by the legal counsel of the Navy, that Corridor 3 was also eliminated by FHWA from further considerations unless mitigating circumstances ensue.

2.0 ALTERNATIVE BUILD CORRIDORS

2.1 Corridor Descriptions

In addition to the No-build alternative and the Transportation System Management (TSM) alternative along the existing alignment, a number of new corridors will be identified and evaluated for improved mobility and safety. See Figure 2.1 Corridor Maps.

Corridor 1 As shown in the Corridor Maps, see Figure 2.1, **Corridor 1** will extend north from the US 90/SR 87S intersection crossing the river in proximity of the existing eastern power easement crossings. Once across the river, it will run parallel or adjacent to the power easement, then connect with SR 87N in proximity of the southern split of SR 87N and SR 89, utilizing the Manning Lane right-of-way. This corridor would be roughly 6.5 miles in length.

Corridor 2 Much like Corridor 1, **Corridor 2** will also extend north from the US 90/SR 87S intersection crossing the river in proximity of the eastern most existing power easement crossing. Once across the river, it will run slightly north of Corridor 1, and run adjacent to the Clear Water Creek environmental lands, where it then heads west to connect with SR 87N in proximity of the northern split of SR 87N and SR 89. This corridor would be roughly 7.2 miles in length.

Corridor 3 Like Corridors 1 and 2, **Corridor 3** will extend north from the US 90/SR 87S intersection crossing the river in proximity of the eastern most existing power easement crossing. Once across the river, the corridor will proceed north on the east side of Whiting Field possibly utilizing portions of the Pat Brown Road right-of-way. Once north of Whiting Field, the corridor will seek passage through a narrow gap between the Nature Conservancy/Florida Forever Lands and Whiting Field to a point where it then can be rejoined with SR 87N north of Whiting Field and south of Southridge Road. This corridor would be around 10.5 miles in length.

Corridors 4-6 These Corridors evaluate areas to the south of US 90, and will involve a new river crossing between Bagdad and Milton. The southern corridor will generally head west from SR 87S using a portion of the US 90 right-of-way that can accommodate widening, and reconnect with SR 87N at the US 90/SR 87N intersection. The western end of this corridor near SR 87N will utilize the right-of-way of the Blackwater Heritage Trail, and incorporate the trail into the roadway's cross section. This corridor may be approximately 5.6 to 6.5 miles in length depending on which option is selected. (The options for this corridor include Corridor 4, as well as the different terminus locations that make up Corridor 5 and Corridor 6.)

Figure 2.1 Corridor Maps

Corridor 1

This Corridor is approximately 6.5 miles in length. It begins at SR 87S, heads north passing just west of the Santa Rosa County Criminal Justice Facility and follows the existing powerline easement across Blackwater River. The alignment heads west just north of the powerline and intersects SR 87N near Oakland Dr.

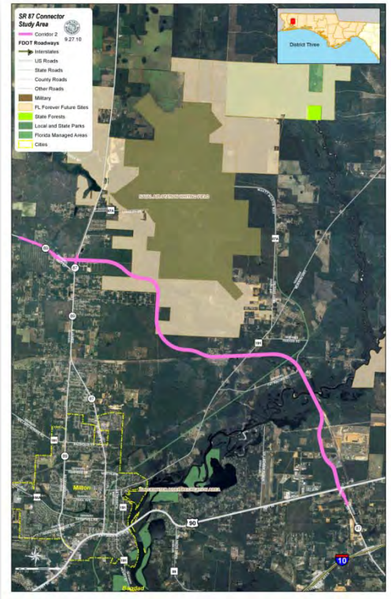

Corridor 2

This Corridor is approximately 7.2 miles in length. It begins at SR 87S, heads north passing just west of the Santa Rosa County Criminal Justice Facility and follows the existing powerline easement across Blackwater River. The alignment heads west just north of the powerline , then heads northwest and intersects SR 87N just north of the SR 89N intersection.

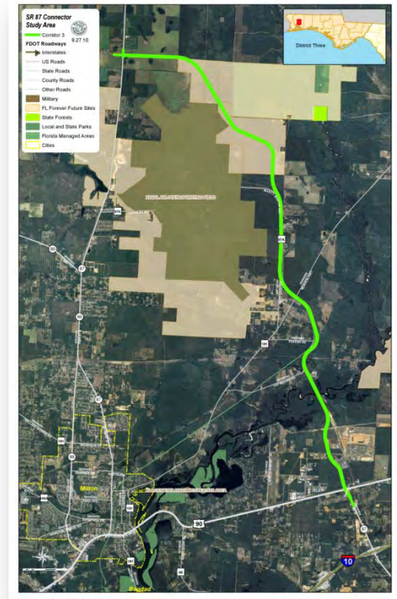

Corridor 3

This Corridor is approximately 10.5 miles in length. It begins at SR 87S, heads north passing just west of the Santa Rosa County Criminal Justice Facility and follows the existing powerline easement across Blackwater River. The alignment Continues north following the Blackwater Heritage Trail to Marty Martin Way. The trail then continues north and northwest until it intersects SR 87N near Jesse Allen Rd.

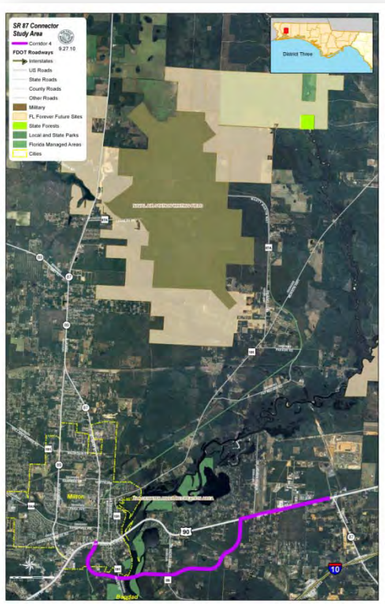

Corridor 4

This Corridor is approximately 5.6 miles in length. It begins at SR 87S and heads west following the existing US 90 alignment. Just west of Airport Rd., the alignment heads southwest, following a portion of S Airport Rd.'s alignment then crosses Blackwater River near McCray Rd. to the East and Taylor St. to the West. The alignment then heads north following the Trail to the SR 87N Intersection.

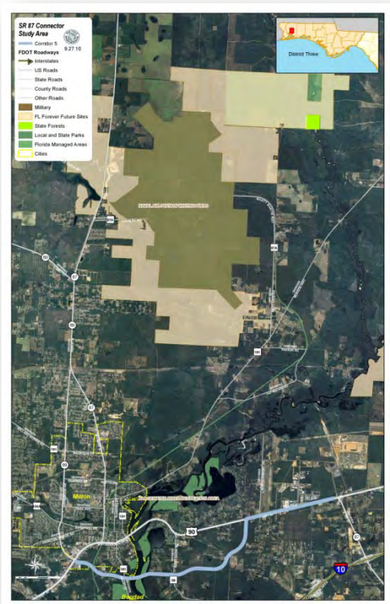

Corridor 5

This Corridor is approximately 5.6 miles in length. It begins at SR 87S and heads west following the existing US 90 alignment. Just west of Airport Rd., the alignment heads southwest, following a portion of S Airport Rd.'s alignment then crosses Blackwater River near McCray Rd. to the East and Taylor St. to the West. The alignment then continues along Old US 90 and West to the US 90/SR 89 intersection.

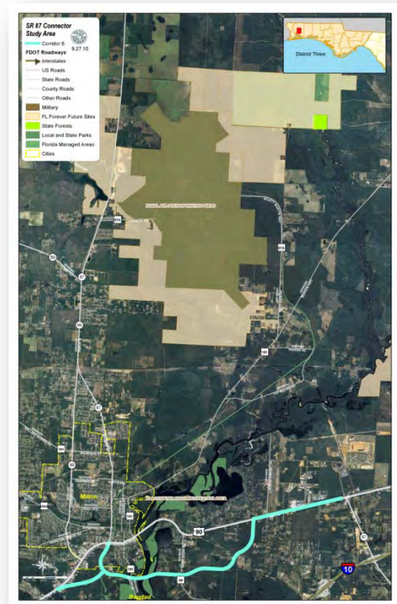

Corridor 6

This Corridor is approximately 6.5 miles in length. It begins at SR 87S and heads west following the existing US 90 alignment. Just west of Airport Rd., the alignment heads southwest, following a portion of S Airport Rd.'s alignment then crosses Blackwater River near McCray Rd. to the East and Taylor St. to the West. The alignment then heads north following the Trail to the SR 87N Intersection, as well as west along Old Hwy 90 until it intersects US 90.

2.2 Proposed Build Corridor Roadway Design

The roadway for the build alternatives is proposed as a four-lane, restricted access, divided highway. South of the Blackwater Bridge the roadway will be Class 5. The bridge and north of the bridge will be a Class 3. It is the intent for the project to build an initial two-lane road and as demand warrants the need, the road would be expanded to four lanes. The ultimate build out to four lanes is also desired to match the four lane section at the existing SR 87S, and at the connection with SR 87N which is also four lane. Most importantly, the four laning of the Connector is pursuant to recent legislation that addresses evacuation routes in Florida's panhandle. (HB 1359-SB 7121) mandates Regional Hurricane Evacuation Route and Shelter improvements for counties north of the US 98 Corridor. HB 1359 stipulates that *"the adopted level of service for out-of-county hurricane evacuation is maintained for a Category 5 storm event as measured on the Saffir-Simpson Scale"*. This is also to comply with rules 9J-5.012(3)(b)(6) and 9J-5.012(3)(b)(7), Florida Administrative Code, by following the process in paragraph (a), that states the level of service shall be no greater than 16 hours for a category 5 storm event.

SR 87 south of the project limits is a four-lane divided urban section. The proposed roadway is intended to match the segment to the south. An urban section will minimize right-of-way impacts and potential impacts to natural lands. As the corridor enters into less constrained areas north of the Blackwater River, a suburban section is being recommended. This will allow for slightly higher speeds and be more appropriate for the area's characteristics, while still reducing the amount of right of way required as compared to a rural section. As the corridor approaches SR 87N, where land uses become more dense, the corridor is recommended to resume the urban typical section minimizing social impacts.

Interim Urban Typical

The interim urban typical section will consist of two twelve-foot travel lanes, crowned in the middle, with four foot shoulder/bike lanes on each side. On the west and south side of the typical, a twelve foot bike/ped. trail will be provided. There will be a sidewalk on the east and north side for the interim urban section. The future median will be used for open drainage in the interim. See Figure 2.2.

Figure 2.2 Interim Urban Typical

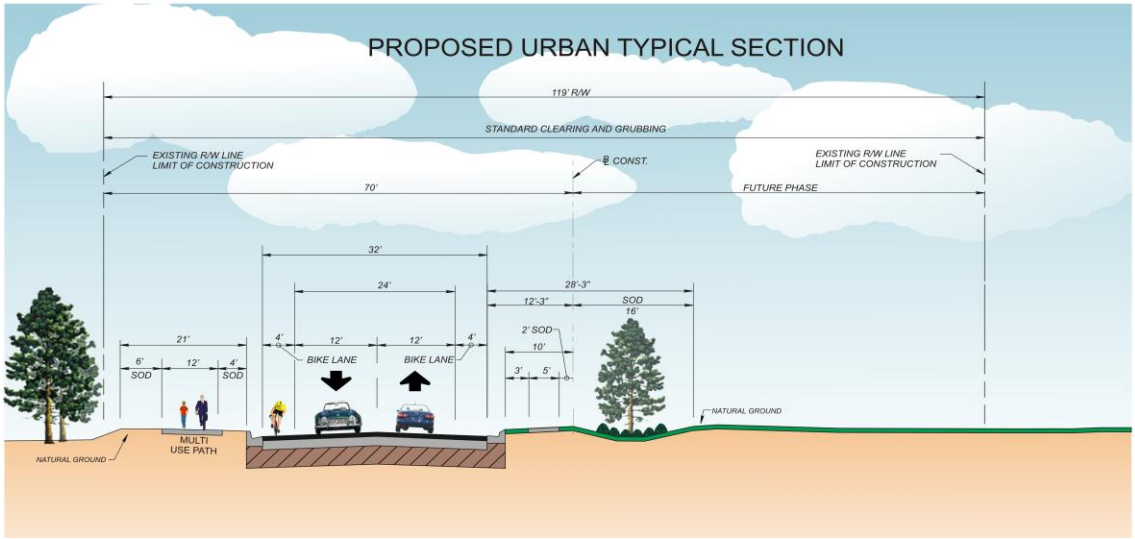

Future Build-out Urban Section

The future urban section will utilize the interim construction. The crown will be overbuilt to provide a single outside slope for drainage. The interim four foot inside shoulder will be eliminated with the over-build. A twenty-four foot median will be provided for landscaping and turn-bays. Two additional north/west bound travel lanes will be added to the typical, along with a four foot outside shoulder. A five foot sidewalk will be provided with curb and gutter and a three foot parkway. See Figure 2.3.

The urban typical will be used between SR 87S and the bridge over the Blackwater River due to existing right of way constraints, and to match SR 87 between US 90 and I-10. The urban typical will also be used in Corridors 1 and 2 for the tie back into SR 87N.

Figure 2.3 Build-out Urban Typical (4-Lane Arterial)

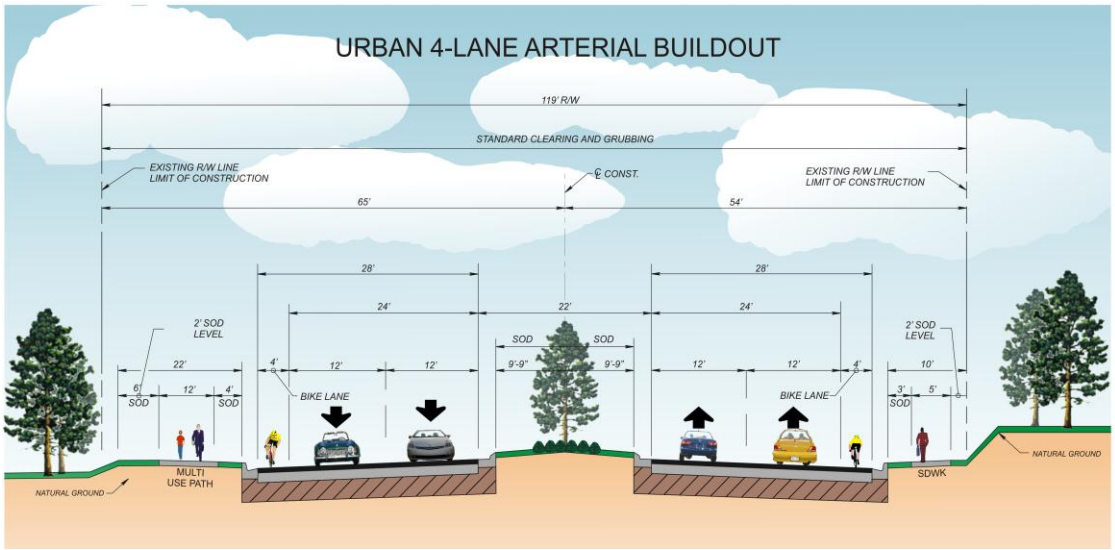

Interim Suburban Typical

The interim suburban typical section will consist of two twelve-foot crowned travel lanes, and six and one-half foot shoulders/bike lanes on each side. In the interim, the median will be utilized for an open drainage swale. On the west and south side of the typical, a twelve foot bike/ped. trail will be provided. There will be sidewalk on the east and north side for the interim urban section. See Figure 2.4.

Figure 2.4 Interim Suburban Typical

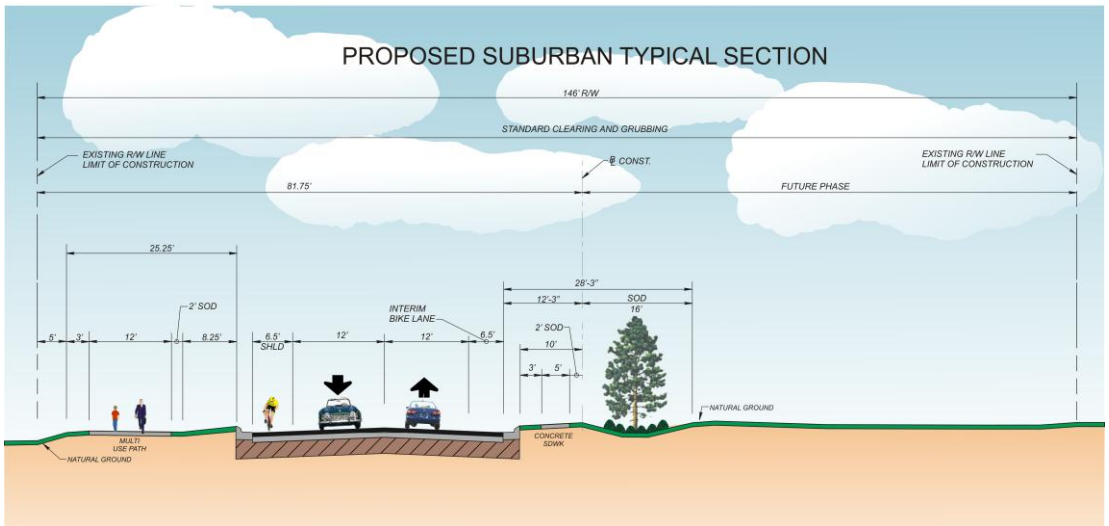

Future Build-out Suburban Section

The future urban section will utilize the interim construction. The crown will be overbuilt to provide a single outside slope for drainage. The interim six and one-half foot inside shoulder will be eliminated with the over-build and replaced with a four foot shoulder. A twenty-two foot median will be provided for landscaping and turn-bays. Two additional north/west bound travel lanes will be added to the typical, along with a six and one-half foot outside shoulder. A five foot sidewalk will be provided with curb and gutter and an eight and a quarter foot parkway. See Figure 2.5.

The suburban typical will be used between the bridge over the Blackwater River and the urban approaches to SR 87N in both Corridors 1 and 2. In Alternative 3, it will be used between the bridge and the east gate to the Whiting Field Naval Station.

Figure 2.5 Build-out Suburban Typical (4-Lane Arterial)

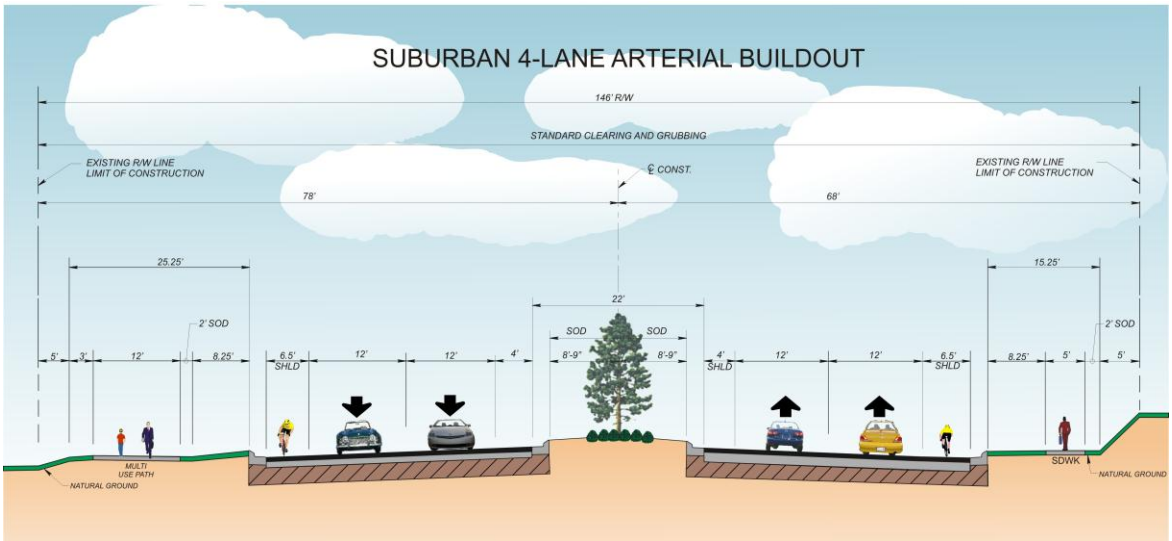

2.3 Storm Water Management Systems

The primary method of storm water attenuation and treatment will be handled in storm water ponds. All types of ponds will be considered, as the final design will depend on several factors such as soil types, proximity to wetlands or waterways, and proximity to aviation flight paths.

The storm water on bridges will be handled the same way on each alternative. The storm water will be collected in scuppers on the bridges, and transported through pipes along the underside of the bridge, and ultimately down a pier column and into the roadway drainage systems.

All corridors have an urban typical section and curb inlets will collect and pipe the runoff to storm water ponds. Corridor 3 has an option to be a rural typical section and will collect runoff in median and roadside ditches. The runoff can then be attenuated in roadside ditches with ditch blocks (weirs) or flow from ditches to storm water ponds to meet water quality treatment requirements.

During construction, ponds shall be constructed prior to any clearing and grubbing for roadbed construction. This will allow subsequent phases of construction to drain to the ponds for treatment and assist with erosion control. In order for the final ponds to function properly, any sedimentation (fine sands and clays) from construction will be excavated and backfilled with suitable soils.

2.4 Proposed Build Corridor Bridge Designs

A key component in all of the build alternatives is that a new bridge crossing will be required at the Blackwater River. As part of building the Corridor alternatives, various bridge locations were assessed in an effort to minimize environmental impacts. Working with environmentalists and DEP staff, two crossing locations were identified. A bridge that could serve potential corridors on the north side of the river was identified at a location immediately adjacent to an existing power line crossing. Likewise, a location was determined for any potential southern corridors.

2.4.1 Locations

North Bridge: The north bridge location will serve Corridors 1, 2, and 3 to the north. As noted, the north bridge location is adjacent to where a major power easement currently crosses the Blackwater River just north of the Santa Rosa County Criminal

Figure 2.6
Power-line easement (Corridors 1, 2, &3)

Justice Center on East Milton Road. See Figure 2.8. This location would place the bridge in an already disturbed river crossing area. In a meeting with DEP on March 24, 2010, DEP concurred that this location served as the best site for the bridge.

South Bridge: The bridge over the Blackwater River in Corridors 4, 5 and 6 is anticipated to tie into the current location of McCray Road on the east end and Taylor Street on the west end. The alignment may need to be shifted slightly to the north of the current alignment of Taylor Street on the west end due to a small canal just to the north of Taylor Street. The amount that it can be shifted will be limited by historic sites to the north and a small creek to the north. See Figure 2.7.

Figure 2.7 Corridors 4, 5 and 6 Crossing

Additional Bridge: For Corridors 1 and 2, there will need to be an additional crossing over Clear Creek south of Whiting Field.

2.4.2 Navigation

There is a railroad swing bridge approximately ¾ miles upstream of the proposed bridge location for Corridor 4a that allows unlimited vertical clearance. The SR 10 (US 90) Bridge is less than ¼ miles upstream from the railroad bridge and has 16.2 feet of vertical clearance over mean high water (MHW) based on the existing plans. The I-10 Bridge, which is approximately 2.5 miles downstream, has 45 foot of vertical clearance over MHW. Assuming the channel depth is sufficient, any vessels that could pass under the I-10 Bridge could make it up to the project location. However, during the ETDM Phase, the Army Corps of Engineers and the United States Coast Guard (USCG) both identified the Blackwater River as commercially un-navigable. The river is navigable for recreational traffic, therefore the bridge will need to provide adequate clearance for the type of boats currently used in the area; however, it does not need to be a high level bridge to accommodate commercial vessels.

Per 23 CFR 650.805 (a), FHWA has the responsibility to determine that a USCG permit is not required for bridge construction and, per 23 CFR 650.805 (d), this determination is to be based on supporting information provided by the

Department. A Bridge Questionnaire is being completed for the Department. Their determination will be then be submitted to FHWA for a final decision. Both Senior Structures Engineer Jeffrey Ger at FHWA and David Frank of the USCG have been contacted and are aware of this project.

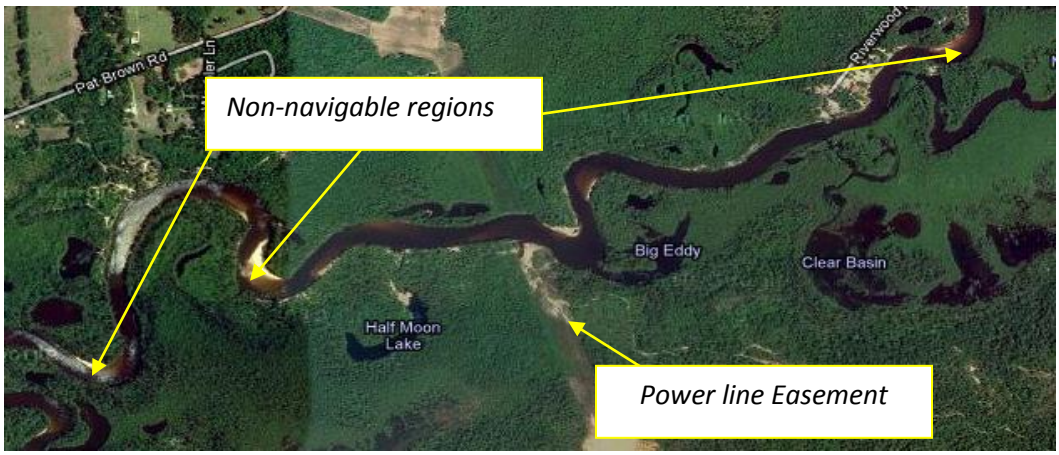

Figure 2.8 Non-Navigable Regions

2.4.3 Bridge Descriptions

The final required bridge length will be set during the preparation of the Bridge Hydraulics Report. For the purposes of this preliminary conceptual study, the total bridge length was estimated by extending it beyond the boundaries of the wetland areas.

For Corridors 1 or 2, the total bridge length is anticipated to be near **3,380 feet** long. In addition, a bridge crossing Clear Creek is estimated to be around **1,170 feet** in total length. For Corridor 3, only the 3,380 ft bridge will be required.

For Corridors 4, 5 and 6, two alternatives were reviewed. These included a bridge with a clearance dictated by the SR 10 (US 90) bridge to the north, and a bridge with a clearance dictated by the I-10 bridge located to the south. The lower level bridge length would need to be approximately **3,105 feet**, and the higher level bridge would need to be approximately **3,800 feet** in total length. It is possible that the low level bridge may need to extend further, especially on the west end, in order to maintain "no-rise" conditions within the floodway.

Construction Requirements

The river crossing will consist of two parallel bridges that will be phased with the roadway phasing. Though two bridges require more piers, it will reduce the shadowing effects on the river. Figure 2.9 shows the potential concept:

Figure 2.9 Bridge Typical Section, Northern Corridors

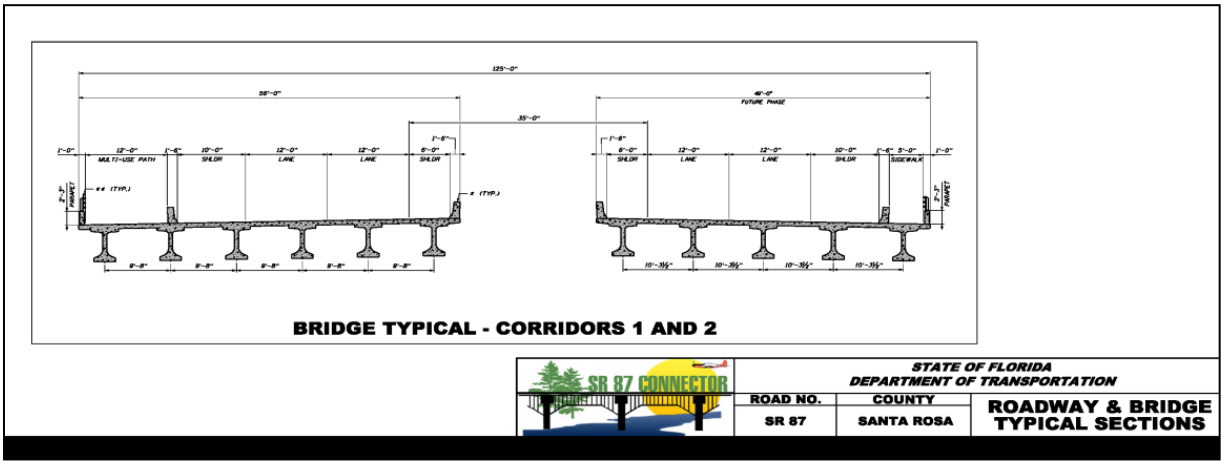

All bridges associated with these corridors will have sections located in environmentally sensitive areas. The final bridge(s) can be constructed using conventional methods in the floodplain areas; however in wetland areas, the preferred construction method chosen will be one that minimizes impacts.

3.0 EVALUATION OF BUILD CORRIDORS

3.1 Evaluation Criterion for the Project's Purpose and Need

Florida's ETDM Programming Screen includes development of the project Purpose and Need. On December 2, 2009, FHWA concurred with the Purpose and Need Statement for the project. As previously discussed in detail in **Section 1.1**., the Purpose and Need of the proposed SR 87 Connector is to:

1) Provide a more direct connection between SR 87S and SR 87N as an alternative to the existing connection via US 90.
2) Improve hurricane evacuation by providing a more direct route to the north, avoiding having to go through the City of Milton.
3) Improve mobility within the regional transportation network by providing new connections to existing and future transportation routes consistent with the Florida/Alabama LRTP.
4) Enhance connectivity for more efficient operation of the Whiting Field Naval Air Station by providing a more direct route to I-10.
5) Improve multi-modalism for the region.
6) Enhance economic development by more effectively serving the Santa Rosa County/Whiting Field Industrial Park.

Criterion 1: ***Provide a more direct connection between SR 87S and SR 87N as an alternative to the existing connection via US 90.***

Corridors 1, 2, and 3 (the northern corridors) meet this criterion as they provide connections north of US 90 and redirect the northbound SR 87 traffic across US 90 to a point where it can reconnect with SR 87N north of the City of Milton. In addition, this provides an estimated 20% relief to the traffic volumes on US 90. Conversely, Corridors 4, 5, and 6 (the southern corridors) would utilize US 90 between SR 87S and just west of South Airport Road. Since these Corridors utilize the existing roadway, the build option of this corridor implies additional lanes of traffic would be added in order for these Corridors to meet Criterion 1. The southern corridors are unique in this fashion as all other corridors provide capacity improvements to the existing roadway network by providing a new alternative route to assist with traffic demands, and to facilitate a more northerly movement consistent with the travel use for SR 87. It should be noted; however, that the southern corridors do provide the greatest relief to the congested and failing sections of US 90. A preliminary traffic analysis reflected an estimated 30% reduction in key locations.

The traffic flow on the new corridor is not insignificant by any standards and the traffic reduction on SR 90 is important on most of the corridor. The new northern corridors will carry more traffic than the SR 90 corridor for two-thirds of its length between SR 87S and Ward Basin Road. The preliminary analysis does indicate that short constrained segments on SR 90 within the downtown of Milton may still fail in 2035. However, regional models in general and the NWFRPM in particular are not good tools to evaluate traffic conditions in a downtown setting because they are based on average link capacity and do not consider intersection capacity that is much more important in downtown environments. It should be noted that the preliminary analysis is based on the adopted NWFRPM. A sub-area model refinement has been developed to more accurately reflect traffic conditions in Downtown Milton and will be used to project traffic for the operational analysis phase of this PD&E. Further, the SR 87 connector has additional benefits such as hurricane evacuation, improved connectivity and access to NAS, enhanced safety, and reduction in fuel consumption and exhaust pollution.

Criterion 2: ***Improve hurricane evacuation by providing a more direct route to the north, avoiding traffic along US 90 in Milton.***

Future traffic projections derived from the adopted NWFRPM cost feasible model accounts for background traffic, regional traffic, and new traffic from new developments and committed projects.

The evacuation options from vulnerable coastal areas in south Santa Rosa County are limited to SR 87, SR 281 or CR 191. None of these routes provide for a direct north-south evacuation corridor. Currently, both SR 87 and CR 191 travel through the most congested areas of the City of Milton and SR 281 does not continue north of US 90. In addition, both SR 281 and CR 191 will not be available during high wind events due to bridge closures, leaving SR 87 as the only available route. The recent Florida Statewide Regional Evacuation Study Program for the West Florida Region named SR 87 as a major evacuation route. The most vulnerable residents, located in Category 1 evacuation zones, are those located in all of Navarre Beach, the Gulf Breeze Peninsula, and all waterfront residents who live within 1300 feet of water from the Okaloosa County Line to Escambia Bay, East Bay and East River. In addition, in East Milton just south and in our study area, all waterfront areas along Blackwater Bay, the Blackwater and Yellow Rivers and all residents who live within 2600 feet of these bodies of water are also in Category 1 Evacuation Zone. During evacuations, it was found that the SR 87S and US 90 intersection in our study area was on the list of most Critical Segments with Highest Queues in the Study.

Corridors 1, 2, and 3 meet this criterion as they all by-pass the City of Milton to its northeast and provide a continuous north-south corridor. The southern corridors do not meet this criterion because large sections of the evacuation route would still need to go through the City. The southern corridors only provide minimal relief from travelling through the Historic District of the Town by circuitously going south and west of the historic district; therefore these southern routes provide very little benefit to hurricane evacuation.

Criterion 3: ***Improve mobility within the regional transportation network by providing new connections to existing and future transportation routes consistent with the local, regional, and State planning documents.***

The project is also in the Florida - Alabama Transportation Planning Organization (TPO)'s 2025 Long Range Transportation Plan (LRTP) Cost Feasible Plan, adopted in Dec 2005, and in the more recently adopted Blueprint 2035 LRTP. Initially, this project was part of a larger Outer Beltway Connector project in the 2025 LRTP that included a new corridor from US 90 in Escambia County to US 90/SR87S in Santa Rosa County. The updated 2035 LRTP now includes specifically the SR 87 Connector as a stand-alone project as well as the Outer Beltway future project. It is listed as a Roadway Capacity Project in the Needs Plan and in the "Beyond 2035" Projects as the Outer Beltway Connector. The Design phase is also listed in the Fiscal Year 2016-2020 Year of Expenditure Cost Feasible Plan in the latest LRTP. In addition, the proposed new facility is in the proposed Transportation Improvement Plan (TIP) Appendices and in the current adopted State Transportation Improvement Plan (STIP). The current (adopted 2011) STIP includes Preliminary Engineering Funds for the year 2012 totaling nearly $1.9M.

Only one general alignment was shown which is similar to the general alignment in the TPO's Long Range Transportation Plan. The map does not, however, show the southern corridors. They were developed as part of this study in an effort to address the growing deficiencies of the US 90 Corridor.

Though all of the build corridors meet this criterion to greater or lesser degrees, Corridors 1, 2, and 3 improve mobility to a greater extent by providing a new bridge crossing in a more strategic location accommodating both travel from the northeast and northwest to areas south, and the reverse for northbound travel. Greater mobility is afforded by providing an alternate to what would otherwise be channeling traffic through the congested areas of the Town of Milton. The northern corridors also provide better links north and south serving areas east of Whiting Field. Corridor 3 offers the greatest mobility improvements in that it provides greater access and additional north/south capacity by providing a duplicate corridor for much of the existing SR 87N

Corridor. Corridor's 1 and 2 are most consistent with the region's LRTP as these corridors are in proximity of the originally intended location from the previous studies outlined in Section 1.2. Likewise, through consultation with Santa Rosa County Planning staff, it was confirmed that the County's Map 4-3 "Needs Not Cost Feasible with Existing Resources," modified November 2008, identifies the project. In addition, it was also included on the previous Map 4-4 "Not Cost Feasible with Existing Revenue Sources," dated April 2002. One alignment will be selected as the preferred alignment, and it will be added to the Comprehensive Plan. It will remain on the "Not Cost Feasible" map until we can show construction is cost feasible.

In addition, funding for this project is on Table 10-1 of the Schedule of Capital Improvements, page 10-13 of the Comprehensive Plan. It was $490,000 in FY 09, a federal earmark. The description is not more specific because generally the language of the earmark itself is used; however, as this study progresses, it can be more specific in the future. This PD&E study is actually funded by three earmarks with the $490,000 as the second earmark. The first was originally appropriated in FY 07, so it is not shown in the Schedule of Capital Improvements, since it is outside the five-year window of the schedule: FY 08 - FY 12. The third earmark is $475,000 appropriated for FY 10, which should be added to the Comprehensive Plan. As typical with most projects, no funding has been identified for the further phases of final design, right-of-way, or construction. It is very rare that a project is funded through all phases at one time. The known funding is included in the Schedule of Capital Improvements. All earmark funds for the PD&E Study have been in the TIP and STIP. The earmarks Include Numbers: 4167483, and 4167484.

The County also believes that if an alternative is not found to the existing roadways, sprawl will extend even further beyond the study area; congestion will worsen on US 90/SR 87 and job growth in particular in the East Milton industrial area will halt. The County's Comprehensive Plan also provides guidance on development around the military base, but the application of the land development code (LDC) further defines, for instance, protections for military airport zones (MAZs). In the LDC, some types of development are compatible with air operations, such as industrial development. The County is building an aviation industrial park adjacent to NAS Whiting Field, made possible by an agreement with the Navy.

Santa Rosa County is nationally known for its cooperation with the Navy to achieve goals of both the County and the military. So, at the very general level of the Comprehensive Plan, a project may appear to be inconsistent, but in fact stronger protections exist such as in the LDC.

Criterion 4: ***Enhance connectivity for more efficient operation of the Whiting Field Naval Air Station by providing a more direct route to I-10.***

Currently, Santa Rosa County is home to eight airfields utilized by the Navy, the largest being NAS Whiting Field. Whiting is supported by 14 NOLFs spread throughout Santa Rosa County, Escambia County, Florida and the counties of Baldwin, Conecuh and Escambia in Southern Alabama. Whiting's mission is to provide services and materials to support the training of US Navy, Coast Guard, Air Force, Marine and international student aviators in fixed-winged training as well as helicopter training. Whiting Field is responsible for 10% of the USN/USMC flight hours worldwide and is a vital flight training area for the US Navy. This vital role in the nation's defense program also represents a large participation in the Santa Rosa County job base and economy. Thousands of military, civilian contractor, and private industry personnel and/or students work or train at this facility and efficient methods of transporting goods and people to and from the base are essential to the success of the base's mission.

Figure 3.1
Blackwater Heritage Trail

Currently, the major roads to Whiting include SR 87 and CR 191, neither of which offers a connection to I-10 without travelling along the congested US 90/SR 87 alignment. Corridors 1, 2, and 3 all meet the criterion of improving connection to Whiting. Corridor 3 is the most successful in meeting this need since it includes roadway improvements all the way to Whiting Field's East Gate. Not only would there be a direct link from the East Gate to I-10, but an additional link north with Corridor 3.

Figure 3.2
US 90 Historic Trail

Corridors 4, 5, and 6 generally do not meet this criterion as they remain too circuitous of a route. These corridors are slightly better in providing a more direct route to I-10 than the existing US 90. The slight benefit is due to the corridors by-passing the historic district and by-passing the constrained US 90 bridge; however, much of the southern routes' alignments utilize the existing SR 87N into town and do not offer significant connectivity for Whiting Field to the north. In spite of the marginal benefits, Corridors 4, 5, and 6 fail to meet the objectives of this *need* as outlined in the Purpose and Need.

Criterion 5: ***Improve multi-modalism for the region.***

All proposed corridors enhance multi-modal aspects of the region. **The FL-AL TPO Long Range Transportation Plan (Blueprint) 2035 states:** ***"The project (SR 87 Connector) will address the need for greater bicycle and sidewalk connectivity in the County with possible connections to the Blackwater Heritage Trail."*** However, corridors vary in the effectiveness due to length, proximity, destination connections, etc. As there is no transit in the area, the multimodal improvements are based on the pedestrian and bicycle facilities provided in conjunction with the roadway, as well as connectivity to the new Whiting Aviation Park located on the east side of NAS Whiting Field that includes an airstrip under joint agreement between the County and the Naval Base.

The two most notable existing pedestrian/bicycle facilities in the region are the Blackwater Heritage Trail and the US 90 Historic Trail. All corridors make the desired connection with the Blackwater Heritage Trail increasing multi-modal opportunities in the area. Corridors 1, 2, and 3 make the connection to the trail near Munson Highway. Corridors 4, 5, and 6 make their connection with the trail at its southern terminus at Old Bagdad Highway. For the northern corridors, even greater opportunities could be explored by increasing the length and connectivity of the existing trail. The SR 87 Connector will greatly enhance the trail by providing a connection with eight to twelve additional miles of multi-use trail that will parallel the SR 87 connector. In addition, the SR 87 Connector will begin to build a network of trails for the Community linking the Blackwater Heritage Trail to the Historic SR 1 Trail along US 90. Likewise, future links can be made to area parks and recreation facilities. It is unknown at this point if there will be grade separation between the trail and the proposed roadway. The need will be determined as part of the final alternatives development.

The southern corridors likewise enhance multi-modal connections to the Blackwater Heritage Trail linking area neighborhoods parks and the Milton Historic District, as well as, areas to the south in the Bagdad Historic District. The northern corridors actually provide vital links to the County's multi-modal opportunities. First, these corridors cross the Blackwater River between the Blackwater Heritage Trail and the US 90 Historic Trail. This link between the two facilities significantly expands the multi-modal network for the region. In addition, Corridors 1 and 2 include both bicycle and pedestrian facilities for their entire length. The other link is the connection to the new Aviation Park on the east side of Whiting Field. This park includes an airstrip and industrial area that will be utilized by the county. Corridor 3 provides the most direct access to this high growth target area. See Figure 3.3.

Figure 3.3 Aviation Park
(Shown in pink)

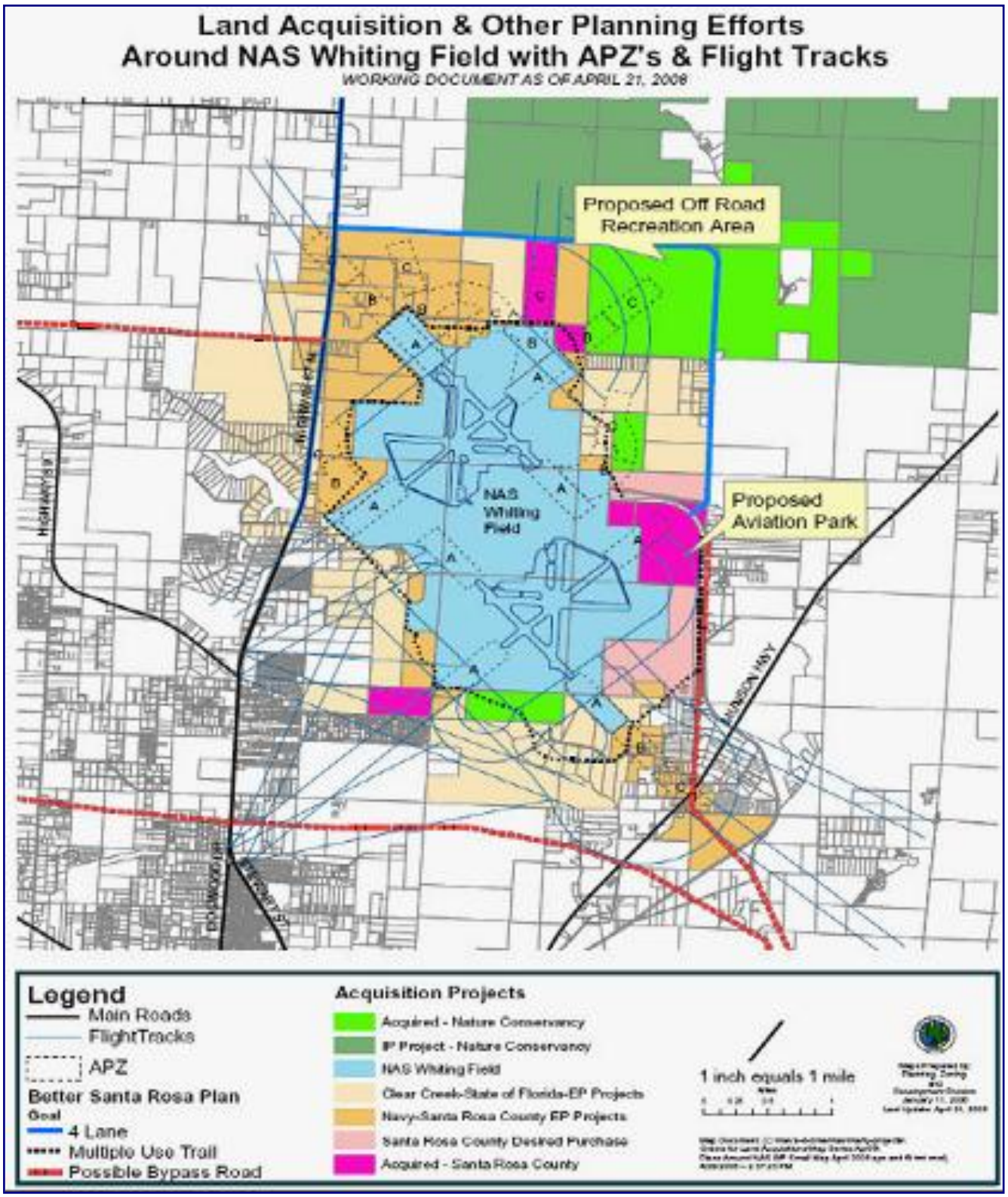

Criterion 6: ***Enhance economic development by more effectively serving the County, as well as the Santa Rosa Joint Land Use Study Planning Area.***

Generally, all corridors help facilitate the economic development targeted by the County and the Town of Milton east of the river by the fact that all corridors provide relief to the failing sections of US 90. However, in addition to the City of Milton's and Santa Rosa County's economic development area near the Santa Rosa Airstrip and the Criminal Justice Center, the County has also recognized Team Santa Rosa's efforts on a Joint Land Use Planning initiative See Figure 3.4. This study is a joint land use study that incorporates the land use planning efforts between Santa Rosa County and the NAS Whiting Field Military Installation. The study area encompasses a nearly 8,000 acre area around Whiting Field in northern Santa Rosa County and includes an Aviation park on the east side of the base and proposed roadways that are similar in location to Corridors 1 and 3.

Figure 3.4 Areas of Economic Development

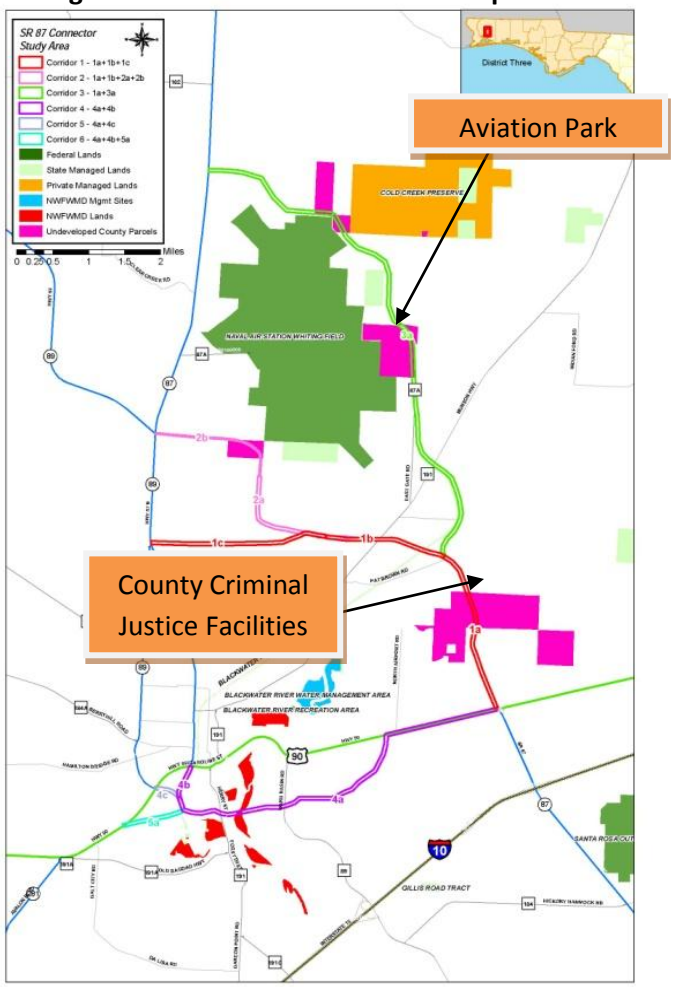

The northern corridors serve this Study area, whereas, the southern corridors do not. Corridors 1 and 2 provide a bypass around Milton and a more direct route to SR 87N. In addition, they also intersect SR 87N in a more developed area than Corridor 3, potentially serving existing residents and business more efficiently. Likewise, Corridor 3 will serve the economic development of the area as it provides an additional North-South Corridor; and a route directly to the Aviation Park, Whiting's East Gate and to the proposed 4 lane section of SR 87N to the State Line.

One important concern voiced by Whiting Field staff was that Corridor 3 may limit some expansion possibilities for Whiting Field, restricting growth of the base to the north.

Corridors 4, 5, and 6 do not connect to the Joint Land Use Planning Area so do little to serve the economic development targeted for this area. The corridors are too far away from the land uses, and do not provide the much needed northbound bridge over the Blackwater River that will enhance the connectivity of the area, and provide north-south connections with I-10 and SR 87N to the Alabama State line. As such, these corridors are applicable to development east of Milton only due to the fact they provide a parallel crossing over Blackwater River to the existing US 90/SR 87 bridge.

3.1.1 Criterion Comparisons

Having evaluated the corridors with respect to the primary objectives of the Project's Purpose and Need, the following **Table 3.1.** compares the corridors to each other by each criterion. If the corridor simply did not meet the criteria, it was assigned a 7. The corridor with the lowest score generally would be considered the corridor that best meets the project's Purpose and Need.

Table 3.1

Purpose and Need Comparison

Corridor	Crit. 1 Connection between 87S and 87N	Crit. 2 Hurricane Evacuation	Crit. 3 Improve Mobility, consistent with LRTP	Crit. 4 Connectivity to WFNAS and Park	Crit. 5 Multi-Modalism	Crit. 6 Economic Dev.	Subtotal
1	1	3	1	3	2	1	11
2	2	2	2	2	3	2	13
3	3	1	3	1	1	3	12
4	5	7	5	7	5	5	34
5	6	7	6	7	6	6	38
6	4	7	4	7	4	4	30

As can be noted, the northern corridors best meet the project's Purpose and Need due to the fact they are avoiding the conflicts along US 90 and are by-passing the congestion of the Town of Milton. The northern corridors also lend themselves to more of a north/south travel consistent with SR 87. Though the southern corridors do meet many of the criteria for the project's purpose and need, they fail to meet all items.

It is important to note, had the primary objective of this Study been to provide east/west relief, the southern corridors would have fared much better. There is in fact a tremendous need for east/west relief on the sections of US 90 that are failing. The objective in looking at the southern corridors was to see how they would compete with the northern corridors in meeting the project's purpose and need. As noted in the analysis, the southern corridors were more effective in providing relief to US 90 (Reference Table 3.5 in Appendix), but fell short when providing for the north/south movement and hurricane evacuation. The other issue associated with the southern corridors was their impacts to the Water Management District's Florida Forever lands which remain to be a fatal flaw.

As stated earlier, regional models in general and the NWFRPM in particular are used for initial evaluations of traffic conditions in a downtown setting because they are based on average link capacity and do not consider intersection capacity that is much more important in downtown environments. A sub-area model refinement has been performed for the study area to more accurately reflect traffic conditions in Downtown Milton. The refined model will be used to project traffic to be used in the operational analysis task of this PD&E.

3.2 Traffic

3.2.1 Alternative Corridors:

Six corridor alternatives for SR 87 Connector, in addition to the No Build alternative, were evaluated for the design year 2035. The new corridor is anticipated to be a two-lane facility with right-of-way for a future four-lane divided facility. Therefore, both the two lane undivided and four-lane divided roadway configurations were evaluated for each new corridor.

3.2.2 Preliminary Analysis of Traffic Conditions:

The traffic analysis of existing conditions (2009) revealed that daily Level of Service (LOS) for most of the roadway segments were currently in the range of A to D, except for four roadway segments located on US 90 and SR 281/Avalon Boulevard. (See Table 3.2) These segments are the following:

- US 90: from Glover Lane to SR 89 (LOS E)
- US 90: from SR 87N/Stewart Street to Canal Street (LOS D)
- US 90: from Broad Street/Willing Street to Johnson Road/Milton Trail (LOS F)
- US 90: from Johnson Road/Milton Trail to Ward Basin Road (LOS TBD)
- SR 281/Avalon Boulevard: from I-10 to US 90 (LOS E) (Currently under construction)

The Highway Capacity Manual (HCM) defines highway capacity and LOS analysis procedures. The 2009 FDOT Quality/Level of Service Handbook provides guidance to evaluate LOS on Florida's facilities. HCM divides highway quality of service into six letter grades, “A” through “F,” with “A” being the best and “F” being the worst.

For most planning and preliminary engineering applications, the maximum service volumes for LOS E can be considered as the capacity of the roadway. LOS F implies travel demand exceeds capacity and the roadway is operating in oversaturated back-up conditions. However, local governments set the allowable LOS standards for each facility type in their comprehensive plans. These adopted LOS standards for suburban or rural facilities are generally less that the roadway capacity and limited to LOS B to D depending on facilities. The adopted LOS standards for the roadway facilities located within the study area are shown in Table 3.2 and in Figure 3.5.

There are three levels of analysis: (1) Generalized planning that makes extensive use of statewide default values and generalized LOS tables, and is intended for broad applications. (2) Preliminary engineering that is more detailed and

accurate than generalized planning and uses tools such as FDOT's LOS software (LOSPLAN), which includes ARTPLAN, FREEPLAN, and HIGHPLAN. And (3) detailed operational analysis using the HCS software, signal optimization software such as SYNCHRO or micro-simulation software such as CORSIM. FSUTMS Transportation models in Florida, including NWFRPM represent the first level of analysis because it is based on generalized LOS tables whereas HCM defines LOS for arterials and freeways based on average speed and density. This PD&E study includes a level (3) operational analysis using HCS, SYNCHRO and CORSIM

The traffic analysis for the design year (2035) was performed for the six corridor alternatives in addition to the No-Build alternative for both the two-lane undivided and four-lane divided roadway configurations of the new corridors. The new SR 87 Connector corridor will attract significant traffic, changing traffic patterns in the study area, and partially relieving traffic congestion on US 90 within the study area.

Figure 3.5; 2009 Daily LOS

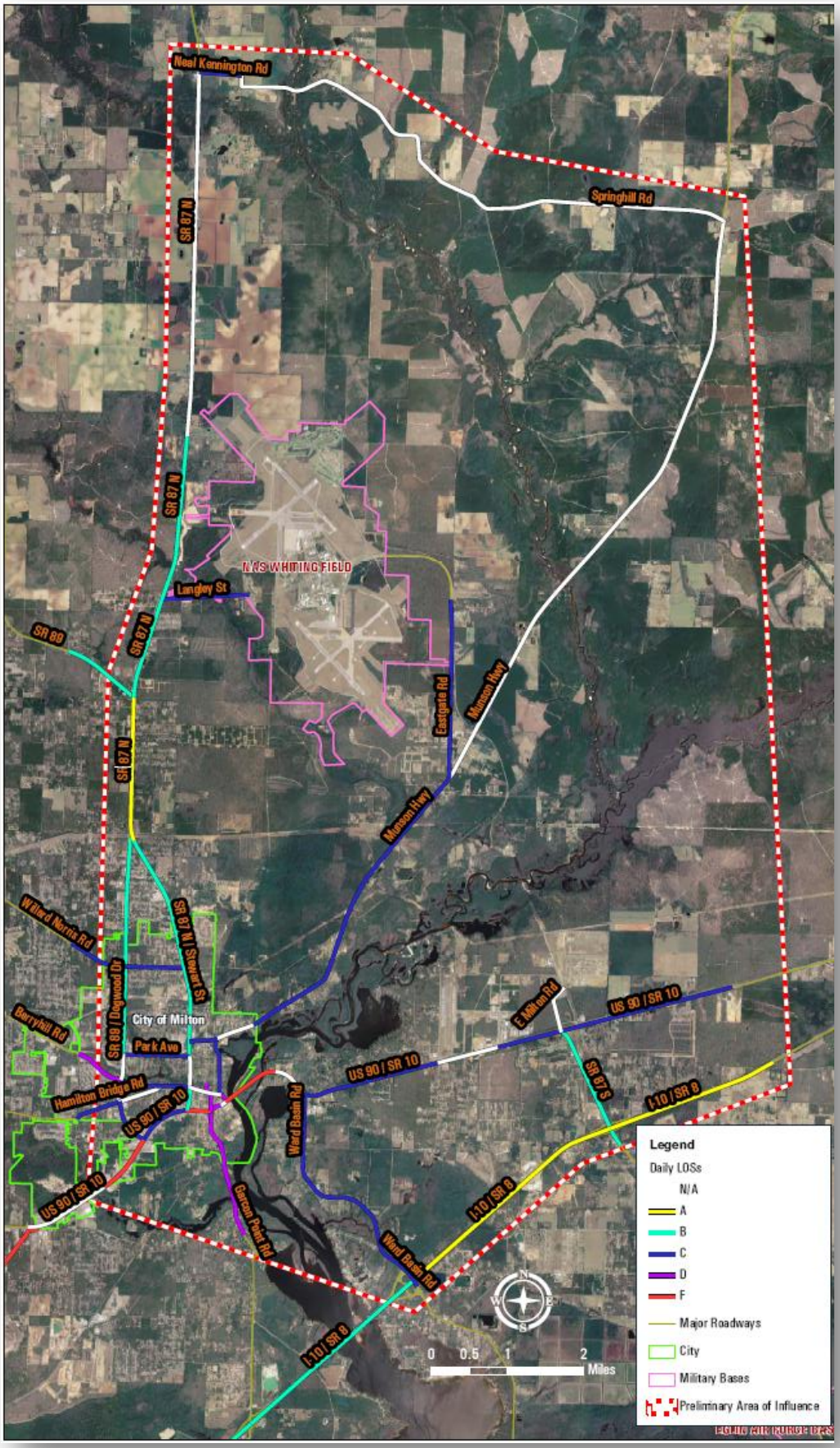

3.2.3 Two-lane Undivided Roadway Configuration:

Compared with the No-Build alternative, all six Build alternatives will improve the failing segments of US 90 between SR 87S and Ward Basin Road to a LOS D or better. The failing segments between Ward Basin Road and Broad Street/Willing Street will decrease by 20% to 30%, though these segments will remain operating at a failing LOS. The failing segments on US 90 west of Broad Street/Willing Street will experience a decrease in traffic volumes but, will also remain operating at a failing LOS. In addition, traffic volumes will decrease at some constrained and failing roadway segments within the Milton downtown area, even though these roadways will remain operating at a failing LOS.

It should be noted that for the regional traffic on SR 87 with no destination in Milton, Corridors 1-3 provide 2.0 to 3.5 miles shorter trip lengths than Corridors 4-5, and save 6 to 8 minutes on each one-way trip from Langley Street to the intersection of SR 87S and US 90, assuming no congestion in Downtown Milton.

Evacuation time will be significantly shorter due to expected congestion in historic downtown Milton and the constrained roadway capacity. Truck travel time savings are even greater due to slower speeds. Therefore, the additional benefits of Corridors 1-3 are to reduce traffic in downtown Milton which relieves congestion and improves safety. The preliminary operational analysis results are summarized in **Table 3.2**.

The 2010 Florida Traffic Information (FTI) DVD indicates that the daily truck percentages on SR 87S are 8.7% (Count Station 58-0020), SR 90 7.0% (Count Station 58-0019), and SR 87N up to 15.4% (Count Station 58-0114). Future truck traffic may even be higher on the SR 87 Connector northern corridors due to the planned and expanded industrial zones in the influence area; and because the connector will offer shorter distance, fewer stops and higher travel speed.

Two important qualifications must be made regarding the traffic analysis in this Corridor Alternatives Evaluation Summary Report. First, as stated above it is based on level 1 analysis using the default capacity tables included in the regional model. Such analysis does not offer a detailed evaluation of traffic conditions or congestion relief in a downtown setting such as the short failing sections on the constrained segments of US 90 located in Downtown Milton. Congestion relief can be better evaluated using detailed operational and intersection analyses to be documented in future reports. Second, the distinction between two-lane and four-lane corridors is very preliminary at this stage. It also requires operational analysis because generalized levels of service

do not account for many factors including truck operation that is very critical on two-lane undivided roadways. Therefore, both downtown congestion relief and the evaluation of two versus four-lane corridors must be performed during the detailed operational analysis phase of this study.

Table 3.2 Daily Level of Service in 2035 (SR 87 Connector is 2-Lane Undivided)

Roadway		Existing						Year 2035													
								No-Build		Alt 1		Alt 2		Alt 3		Alt 4		Alt 5		Alt 6	
From	To	Number of Lanes	Segment Length	Adpoted LOS	Capacity (LOS 2007 Tables)	Daily LOS	v/C	Daily LOS	v/C	Daily LOS	v/C	Daily LOS	v/C	Daily LOS	v/C	Daily LOS	v/C	Daily LOS	v/C	Daily LOS	v/C
US 90																					
SR 281/Avalon Blvd	Parkmore Plaza	4	0.25	D	32,700	N/A		F	1.45	F	1.42	F	1.39	F	1.42	F	1.47	F	1.47	F	1.50
Parkmore Plaza	Glover Ln	4	0.74	D	32,700			F	1.45	F	1.42	F	1.39	F	1.42	F	1.46	F	1.44	F	1.49
Glover Ln	SR 89	4	0.70	D	32,700	F	1.12	F	1.26	F	1.23	F	1.21	F	1.23	F	1.10	F	1.15	F	1.07
SR 87N/Stewart Street	Canal Street	2	0.27	D	16,400	F	1.10	F	1.25	F	1.15	F	1.19	F	1.19	D	0.86	F	1.09	C	0.83
Broad St/Willing St	Johnson Rd/Milton Tr	2	0.69	D	16,400	F	1.04	F	1.81	F	1.40	F	1.42	F	1.53	F	1.30	F	1.25	F	1.30
Johnson Rd/Milton Tr	Dale St/Ward Basin Rd	2	0.42	D	16,400	N/A		F	1.67	F	1.28	F	1.29	F	1.40	F	1.17	F	1.11	F	1.16
Dale St/Ward Basin Rd	Airport Rd	2	1.26	D	16,400	C	0.79	F	1.09	C	0.78	C	0.80	D	0.86	D	0.94	D	0.92	D	0.97
Airport Rd	Industrial Blvd	2	0.97	D	16,400	N/A		F	1.19	D	0.90	D	0.91	D	0.98	B	0.66	B	0.68	B	0.69
Industrial Blvd	SR 87S	2	0.75	D	16,400	C	0.73	F	1.18	D	0.91	D	0.92	D	0.98	B	0.65	B	0.67	B	0.68
SR 281/Avalon Blvd																					
I-10	US 90	2	4.88	D	16,400	F	1.25	F	1.42	F	1.29	F	1.25	F	1.30	F	1.23	F	1.20	F	1.22
CR 191/Henry St																					
South of US 90	US 90	2	0.41	D	10,000	D	0.7	D	0.91	D	0.96	E	1.02	D	0.94	C	0.21	D	0.71	C	0.22
CR 191/Broad St/Willing St																					
US 90	Berryhill Rd	2	0.11	D	10,000	D	0.8	E	1.18	D	0.91	D	0.96	E	1.06	D	0.93	D	0.94	D	0.97
Old US 90 (High speed 2LU for Corridor 6 only)																					
Canal Street	US 90	2	1.03	D	10,000	N/A		C	0.08	C	0.07	C	0.08	C	0.08	D	0.83	C	0.12	C	0.63

Legend

- Acceptable LOS
- Traffic Volume Exceeds Adopted LOS
- Four-lane Divided Roadway with the Capacity of 37,500 for Alts 4, 5 and 6

3.2.4 Four-lane Divided Roadway Configuration:

Except for Corridors 4, 5 and 6, the project traffic volumes of each segment for all Build Alternatives were almost the same as those with the two lane undivided roadway configuration for the new corridors. Therefore, the conclusion for the new corridors with the two-lane undivided roadway configuration is also applicable to the four-lane divided roadway configuration. The preliminary operational analysis results are summarized in **Table 3.3**. However, Corridors 4, 5 and 6 now attract slightly more traffic. **Table 3.4** shows the comparison of the project traffic volumes between the two-lane undivided and the four-lane divided roadway configurations for the Build Corridors.

Table 3.3 Daily Level of Service in 2035 (SR 87 Connector is 4-Lane Divided)

Roadway		Existing						Year 2035													
								No-Build		Alt 1		Alt 2		Alt 3		Alt 4		Alt 5		Alt 6	
From	To	Number of Lanes	Segment Length	Adpoted LOS	Capacity (LOS 2007 Tables)	Daily LOS	v/C	Daily LOS	v/C	Daily LOS	v/C	Daily LOS	v/C	Daily LOS	v/C	Daily LOS	v/C	Daily LOS	v/C	Daily LOS	v/C
US 90																					
SR 281/Avalon Blvd	Parkmore Plaza	4	0.25	D	32,700	N/A		F	1.45	F	1.40	F	1.40	F	1.41	F	1.45	F	1.46	F	1.54
Parkmore Plaza	Glover Ln	4	0.74	D	32,700			F	1.45	F	1.40	F	1.40	F	1.41	F	1.42	F	1.43	F	1.52
Glover Ln	SR 89	4	0.70	D	32,700	F	1.12	F	1.26	F	1.22	F	1.22	F	1.22	E	1.04	F	1.20	E	1.04
SR 87N/Stewart Street	Canal Street	2	0.27	D	16,400	F	1.10	F	1.25	F	1.17	F	1.17	F	1.19	C	0.70	E	1.02	C	0.75
Broad St/Willing St	Johnson Rd/Milton Tr	2	0.69	D	16,400	F	1.04	F	1.81	F	1.36	F	1.39	F	1.53	F	1.24	F	1.15	F	1.17
Johnson Rd/Milton Tr	Dale St/Ward Basin Rd	2	0.42	D	16,400	N/A		F	1.67	F	1.23	F	1.26	F	1.40	F	1.10	E	1.01	E	1.03
Dale St/Ward Basin Rd	Airport Rd	2	1.26	D	16,400	C	0.79	F	1.09	C	0.76	C	0.78	D	0.87	D	0.89	D	0.85	D	0.87
Airport Rd	Industrial Blvd	2	0.97	D	16,400	N/A		F	1.19	D	0.87	D	0.90	D	0.98	B	0.69	B	0.70	B	0.72
Industrial Blvd	SR 87S	2	0.75	D	16,400	C	0.73	F	1.18	D	0.89	D	0.91	D	0.99	B	0.68	B	0.69	B	0.70
SR 281/Avalon Blvd																					
I-10	US 90	2	4.88	D	16,400	F	1.25	F	1.42	F	1.25	F	1.23	F	1.27	F	1.20	F	1.19	F	1.20
CR 191/Henry St																					
South of US 90	US 90	2	0.41	D	10,000	D	0.7	D	0.91	E	1.01	D	0.98	D	0.95	C	0.12	D	0.52	C	0.12
CR 191/Broad St/Willing St																					
US 90	Berryhill Rd	2	0.11	D	10,000	D	0.8	E	1.18	D	0.85	D	0.90	E	1.08	E	1.00	D	0.73	D	0.79
Old US 90 (Widened to 4LU for Corridor 6 only)																					
Canal Street	US 90	2	1.03	D	21,300	N/A		C	0.08	C	0.07	C	0.07	C	0.08	D	0.79	C	0.41	C	0.47

Legend

X Acceptable LOS

X Traffic Volume Exceeds Adopted LOS

Four-lane Divided Roadway with the Capacity of 37,500 for Alts 4, 5 and 6

Table 3.4 Comparison (2-Lane divided) of Project Traffic Volumes (2035)

Corridor	From	To	2-Lane Undivided			4-Lane Divided		
			AADT	V/C	LOS	AADT	V/C	LOS
1	US 90	Munson Hwy	15,746	0.75	D	17,046	0.30	A
	Munson Hwy	SR 87N	13,654	0.65	C	14,156	0.25	A
2	US 90	Munson Hwy	15,538	0.74	D	16,519	0.29	A
	Munson Hwy	SR 87N	13,065	0.62	C	13,945	0.25	A
3	US 90	Munson Hwy	13,244	0.63	C	13,420	0.24	A
	Munson Hwy	SR 87N	10,957	0.52	C	11,128	0.20	A
4	US 90	Ward Basin Rd	4,971	0.23	B	6,784	0.11	A
	Ward Basin Rd	Henry St	16,299	0.77	D	18,614	0.30	B
	Henry St	Old US 90	24,126	1.13	E	27,878	0.45	B
	(4b) Old US 90	SR 87 N	15,216	0.71	D	18,252	0.30	A
5	US 90	Ward Basin Rd	6,291	0.30	B	7,854	0.13	A
	Ward Basin Rd	Henry St	18,456	0.87	D	20,064	0.32	B
	Henry St	Old US 90	20,939	0.98	D	25,595	0.41	B
	(5a) Old US 90	SR 89	16,075	0.75	D	23,176	0.38	B
6	US 90	Ward Basin Rd	5,353	0.25	B	8,130	0.13	A
	Ward Basin Rd	Henry St	16,843	0.79	D	20,770	0.34	B
	Henry St	Old US 90	24,585	1.15	E	30,100	0.49	B
	(4b) Old US 90	SR 87 N	13,635	0.64	C	15,524	0.25	A
	(6a) Canal St	US 90	10,105	0.47	C	13,458	0.22	A

3.2.5 Overall Regional Affect

As illustrated in Table 3.5 (in Appendix D) and Table 3.6, the northern corridors pull the most traffic off of the network and decrease the overall Vehicle Miles Travelled (VMT). Corridor 3 provides access to Whiting Field, which is likely the largest traffic generator north of Milton, but its intersection with SR 87N is well north of Milton in a rural area. As a result, this may not be as effective in serving the more congested areas closer to Milton. Corridors 1 and 2 are closer to Milton and will serve as more of an alternative route to residences and businesses in the area. Corridors 1 and 2 also could include a connection to Munson Highway which would give direct access to Whiting.

Regionally, Corridors 4, 5, and 6 draw traffic from US 90, but do not offer the regional benefit to the roadway network the northern corridors offer. Please see the following tables and Appendix D for the Network Segment Performance and VMT results.

Table 3.6 Vehicle Miles Travel Reduction

Corridor	Existing trip length on SR 90	Existing trip length on SR 87 N	Total Existing trip length (miles)	New Corridor trip length (miles)	Trip Reduction (miles)	AADT	VMT Reduction (miles/day)	Gas Use Reduction (Gallons/ day)
1	4.6	3.8	8.4	6.5	1.9	14,856	28,200	1,410
2	4.6	5.0	9.6	7.2	2.4	13,945	33,500	1,675
3	4.6	9.0	13.6	10.5	3.1	11,128	34,500	1,725
4	4.6	n/a	4.6	5.6	n/a	n/a	n/a	n/a
5	4.6	n/a	4.6	5.6	n/a	n/a	n/a	n/a
6	4.6	n/a	4.6	6.5	n/a	n/a	n/a	n/a

- Daily reduction in gas consumption based on an average vehicle consumption of 20 miles per gallon

Table 3.7 Traffic Evaluation Comparison

Corridor	Overall Regional Effect	Traffic Relief on US 90 and Downtown	Reduction in Vehicle Miles Traveled (VMT)	Subtotal
1	1	4	3	8
2	2	5	2	9
3	3	6	1	10
4	5	2	4	11
5	6	3	4	13
6	4	1	4	9

3.3 Alternative Build Corridors Potential Environmental Impacts

3.3.1 Wetlands, Species, Floodplains, and Outstanding Waterways

The six corridors were evaluated using geographic information system (GIS) data and limited field verification. All GIS data was evaluated within a 250 foot Right of Way (ROW) width to determine total corridor acreage and the acreage of each criterion evaluated. Acres were then calculated for all the criteria except for Florida Natural Areas Inventory (FNAI) element occurrences data and Florida Fish and Wildlife Conservation Commission (FFWCC) black bear kill data. Priority and class rankings for wetlands, habitat, floodplains, and Integrated Wildlife Habitat Ranking System were developed by Florida Natural Areas Inventory staff and Florida Fish and Wildlife Conservation Commission staff. The priorities and class rankings are "built-in" to the GIS shapefiles. The following table and figures summarize and illustrate the data collected for the impact evaluation:

Table 3.8 Environmental Comparison

		Corridors					
Criterion		***1***	***2***	***3***	***4***	***5***	***6***
Total Corridor Acres		***413.94***	***495.90***	***637.93***	***345.76***	***338.35***	***406.40***
NWI Wetlands (Acres)[1]	Palustrine	101.1	93.83	0.43	108.77	105.8	126.82
	Estuarine	0	0	0	16.03	16.03	16.03
	Total	101.1	93.83	0.43	124.8	121.83	142.85
	% of Total	24%	19%	0%	36%	36%	35%
Florida Natural Areas Inventory (FNAI) Wetland Priorities (Acres)[2]	Priority 1	84.21	83.72	42.43	63.01	63.01	63.01
	Priority 2	0	0	0	0	0	0
	Priority 3	17.55	11.74	1.31	43.9	40.45	41.5
	Priority 4	0	0	0	0	0	0
	Total	101.76	95.46	43.74	106.91	103.46	104.51
	% of Total	25%	19%	7%	31%	31%	26%
FFWCC Strategic Habitat Conservation Areas (Acres)[3]	Priority 1	0	0	0	0	0	0
	Priority 2	1.11	1.11	14.97	10.5	4.73	11.14
	Priority 3	0	0	0.13	2.93	2.93	2.93
	Priority 4	0	0	0	0	0	0
	Priority 5	233.44	202.69	108.93	154.41	146.85	177.4
	Total	234.55	203.8	124.03	167.84	154.51	191.47
	% of Total	57%	41%	19%	49%	46%	47%
Floodplains (Acres)[4]	Priority 1	35.26	35.26	29	0	0	0
	Priority 2	0	0	0	18	18	18
	Priority 3	0.07	0.07	0.07	66.82	60.22	75.45
	Total	35	35	29	85	78	93
	% of Total	9%	7%	4%	25%	23%	23%
FNAI T/E Species (Count)[5]		0	0	0	0	0	1
FDEP OFW (Acres)[6]		39.05	39.05	44.22	35.84	35.84	35.84
Black Bear Kills (Count)[7]		0	0	0	0	0	0
FFWCC Integrated Wildlife Habitat Ranking System (Acres)[8]	Class 1	0	0	0	0	0	0
	Class 2	0.62	0.62	78.34	23.35	19.71	27.4
	Class 3	15.97	11.05	127.37	93.37	88.32	109.58
	Class 4	56.18	32.52	109.31	120.65	118.67	126.41
	Class 5	101.09	145.7	50.74	79.5	82.77	109.08
	Total 1-5	173.86	189.89	365.76	316.87	309.47	372.47
	% of Total	42%	38%	57%	92%	91%	92%
	Class 6	80.02	145.96	22.97	15.67	15.67	15.67
	Class 7	59.14	59.14	30.64	13.2	13.2	13.2
	Class 8	100.93	100.93	119.34	0	0	0
	Class 9	0	0	0	0	0	0
	Class 10	0	0	0	0	0	0
	Total 6-10	240.09	306.03	172.95	28.87	28.87	28.87
	% of Total	58%	62%	27%	8%	9%	7%
FLUCCS Pristine Lands (Acres)[9]	Total	220.31	273.1	375.4	234.58	233.52	233.46
	% of Total	53%	55%	59%	68%	69%	57%
FEMA Special Flood Hazard (Acres)[10]	Total	94.22	94.22	84.3	67.01	66.4	105.56
	% of Total	23%	19%	13%	19%	20%	26%
Superscripts refer to the metadata references in Appendix C							

Figure 3.6 Environmental Concerns

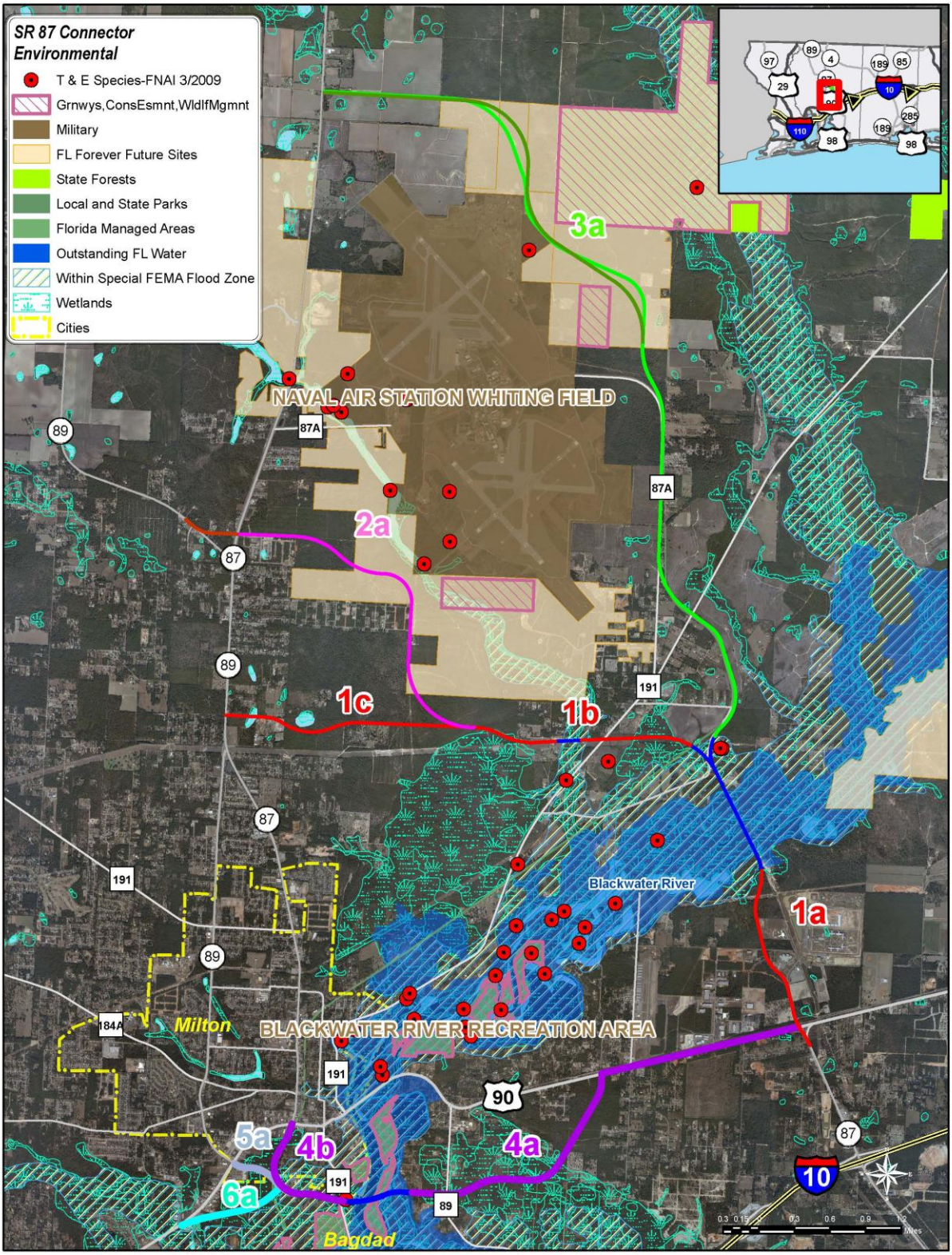

Figure 3.7 Integrated Wildlife Habitat Rankings

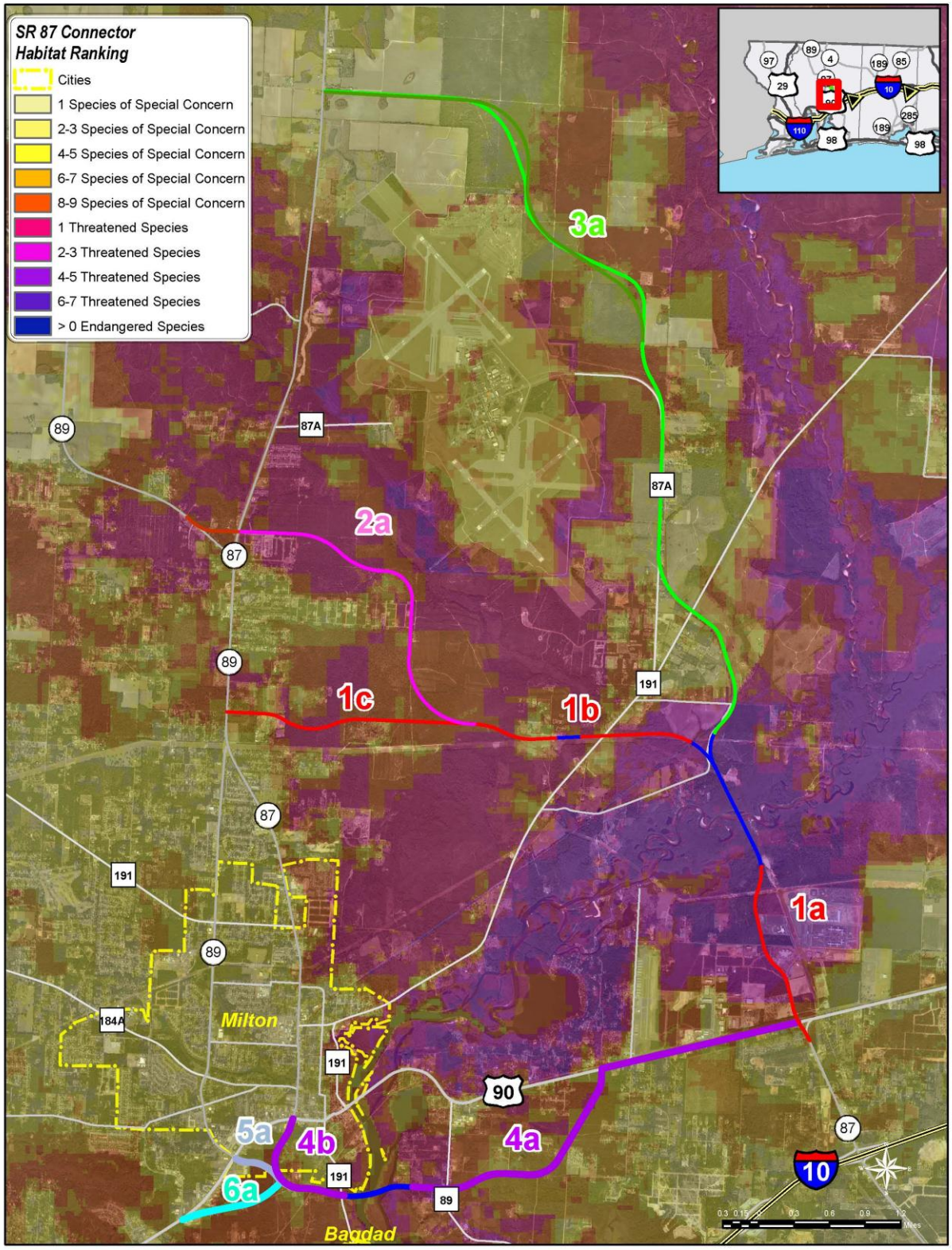

3.3.2 Avoidance, Minimization, and Secondary and Cumulative Impacts

Avoidance and Minimization

Planning measures are being taken to avoid and minimize wetland impacts to the maximum extent practicable. The Blackwater River will have to be crossed in all Corridors. To determine the least environmentally damaging practical corridor, a crossing analysis was conducted. Working with DEP the location that would have the least impact was to co-locate the bridge with the power line easement where the environment adjacent to the river is most degraded. In a meeting on May 25, 2010 DEP staff stated they would support the proposed bridge location associated with Corridors 1, 2, and 3.

Corridors 1 and 2 must also cross Clear Creek. A similar crossing analysis will be conducted for Clear Creek and the least environmentally damaging practicable alternative will be selected. Further, wetlands associated with the creek will be bridged where feasible to reduce direct wetland impacts.

If avoidance of T/E species is not feasible, then impacts to the habitats will be minimized or appropriate permits from the State or Federal agencies will be obtained to transplant or relocate the particular species. The State requires incidental take permits for wildlife through the Florida Fish and Wildlife Conservation Commission (FFWCC). The FFWCC also regulates relocating gopher tortoises. If necessary, relocation permits will be obtained for gopher tortoises prior to construction. The Federal government requires incidental take permits for plants and wildlife through the US Fish and Wildlife Services (USFWS). Depending on the species within the corridor areas, if any, permits will be applied for prior to construction. Relocation plans will be species dependent. Takes will be considered as a last resort, but will be avoided if possible.

Road placement is being carefully considered to try to avoid or minimize wetland impacts. Simply providing bridges over significant wetland areas will help to avoid and minimize impacts to wetlands as well. Acceptable mitigation will be provided for all unavoidable wetland impacts. Stormwater treatment is being planned for the new corridor to eliminate untreated runoff to wetlands.

Where impacts to wetlands or T/E species are necessary, appropriate mitigation plans will be developed to address each resource. Wetland impacts will be assessed using the Uniform Mitigation Assessment Methodology (UMAM) and the necessary off-set will be offered. T/E species mitigation will be evaluated with the Florida Fish and Wildlife Conservation Commission and/or the US Fish and Wildlife Service.

Wetland impacts were evaluated using both the National Wetlands Inventory (NWI) and the FNAI Wetland Priority data layer. The summary table indicates that Corridor 3 has the smallest acreage and percentage of impact for both of these categories although it is the longest corridor.

Floodplains were evaluated using Federal Emergency Management Agency (FEMA) flood zone designation data and the Florida Natural Areas Inventory (FNAI) floodplain priority data layer. To evaluate the FEMA data, all floods zones in the high risk category were included. Based on the FEMA data, Corridor 5 has the least acreage impact out of all the corridors. Corridor 3 has the least impact by percentage out of all the corridors and the least acreage impact out of the northern corridors. Corridor 3 also impacts the least acreage of FNAI floodplain priority areas out of all the corridors.

Due to the presence of the Blackwater River in the vicinity of all the corridors, the acreage of impact to Outstanding Florida Waters (OFW) was evaluated using data from the Florida Department of Environmental Protection (FDEP). Corridors 4-6 have less impact to OFW designated waters than Corridors 1-3.

To evaluate the potential impacts to pristine habitat areas, Florida Land Use, Cover, Forms Classification System (FLUCCS) data, FNAI Habitat Priority data, and Florida Fish & Wildlife Conservation Commission (FFWCC) Integrated Wildlife Habitat Ranking System (IHWRS) data were evaluated. Corridor 3 had the least impact based on the FNAI habitat priority data. Corridor 1 had the least impact based on the FLUCCS data.

The IHWRS ranks wildlife habitat using ten different data layers. A higher score represents a higher priority for use by wildlife. The highest rankings occur close to the Blackwater River floodplain, the Clear Creek floodplain, and the FDEP Florida Forever Tracts. The IHWRS data was evaluated by comparing the scores of 1-5 as compared to scores of 6-10. Corridors 4-6 have a smaller impact to the higher priority habitats since 90% (+/-) of their land area is classified between Priorities 1-5. Corridor 3 has the lowest impact to the highest priority areas when comparing the three northern corridors.

To evaluate the potential impacts to known threatened and/or endangered species, FNAI element occurrence data and FFWCC black bear kill data were evaluated. The Blackwater River floodplain and the Clear Creek floodplain have the most suitable habitat for many threatened and endangered plant species; however, only Corridor 6 had a documented species occurrence even though all the corridors require bridging the floodplains. There were no identified black bear kills within the vicinity of any corridors.

Many measures can be taken to reduce the amount of secondary and indirect impacts. Specific erosion control measures can be implemented during construction, construction activities can be planned to take place outside of nesting or breeding season of any listed species that may be present in the area, and additional mitigation can be provided. Additional mitigation can include: educational signage on nearby nature trails, culverts for wildlife crossings under certain sections of roadway, and wildlife crossing signs posted on the new roadway.

Secondary and Cumulative Impacts

Many measures will be taken to reduce the amount of secondary and indirect impacts. Specific erosion control measures will be implemented during construction, construction activities will be planned to take place outside of nesting or breeding season of any listed species that may be present in the area, and additional mitigation will be provided. Additional mitigation will include: educational signage on nearby nature trails, culverts for wildlife crossings under certain sections of roadway, and wildlife crossing signs posted on the new roadway.

3.3.3 Noise Receptors

A preliminary field review was conducted on July 1, 7 & 8, 2010 for the proposed alternative corridors (Corridors 1, 2, 3, 4, 5 and 6) of the SR 87 Connector PD&E Study. The purpose of the field review was to identify and map all noise receptors within 400 feet of the each proposed roadway corridor. As defined in Chapter 17 Noise of the PD&E Manual, a noise receptor is: *Any property (owner occupied, rented, or leased) where frequent exterior human use occurs and where a lowered noise level would be of benefit. In those situations where there are no exterior activities to be affected by the traffic noise, the interior of the building shall be used to identify a noise sensitive receiver. Many commercial and/or industrial land uses are not particularly noise sensitive and may not require consideration of noise abatement. This determination must be made on a case-by-case basis. Undeveloped land is not considered to be noise sensitive.*

The proposed alternative corridors were reviewed by traversing all roads within and adjacent to each corridor alignment. For those areas that were not accessible in the field, aerial photo-interpretation of the Santa Rosa County Property Appraiser maps (2006) and recently flown (2010) aerials were used to identify potential noise receptors. The noise receptors identified within 400 feet of each proposed corridor consisted of residences scattered through-out each corridor, the Milton Girls Juvenile Residential Facility recreational area, Whiting Field Naval Air Station (NAS) golf course (a “special use” noise receptor), the Blackwater Heritage State Trail, recreation trail rest areas, First Baptist Church of East Milton, and Living God’s Standard Community Outreach Church. All noise receptors identified are shown on Figures 3.8 and 3.9 and in Table 3.9:

Table 3.9 Noise Receptors

Proposed Corridor	Potential Noise Receptors			
	Residences	Churches	Recreation	Total
Corridor 1 (1a+1b+1c)	90	0	1 (juvenile rec. facility), 1 (trail)	92
Corridor 2 (1a+1b+2a+2b)	98	0	1 (juvenile rec. facility), 1 (trail)	100
Corridor 3 (1a+3a)	86	0	1 (juvenile rec. facility), 4 (trails), 1 (trail rest area), 1 (golf course)	93
Corridor 4 (4a+4b)	58	2	1 (trail rest area)	61
Corridor 5 (4a+4c)	50	2	1 (trail rest area)	53
Corridor 6 (4a+4b+5a)	67	2	1 (trail rest area)	70

Figure 3.8 Northern Corridors Noise Receptors

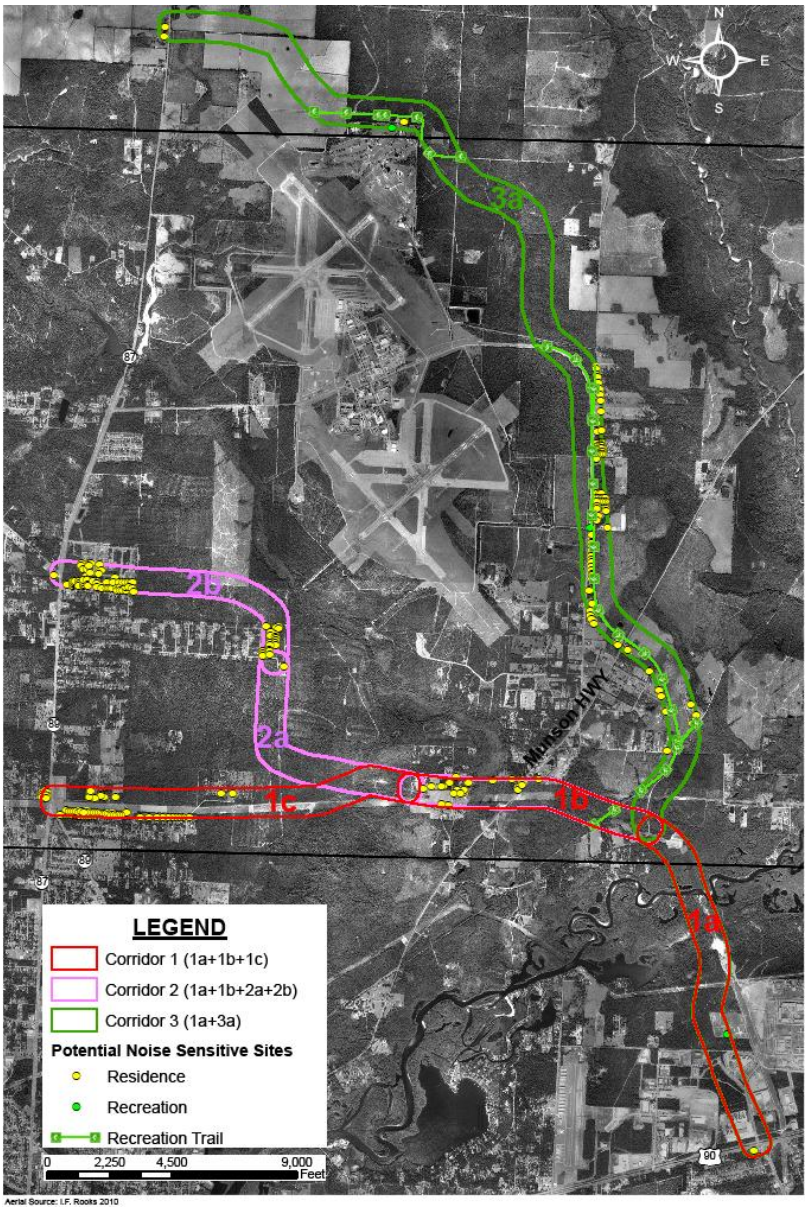

Figure 3.9 Southern Noise Receptors

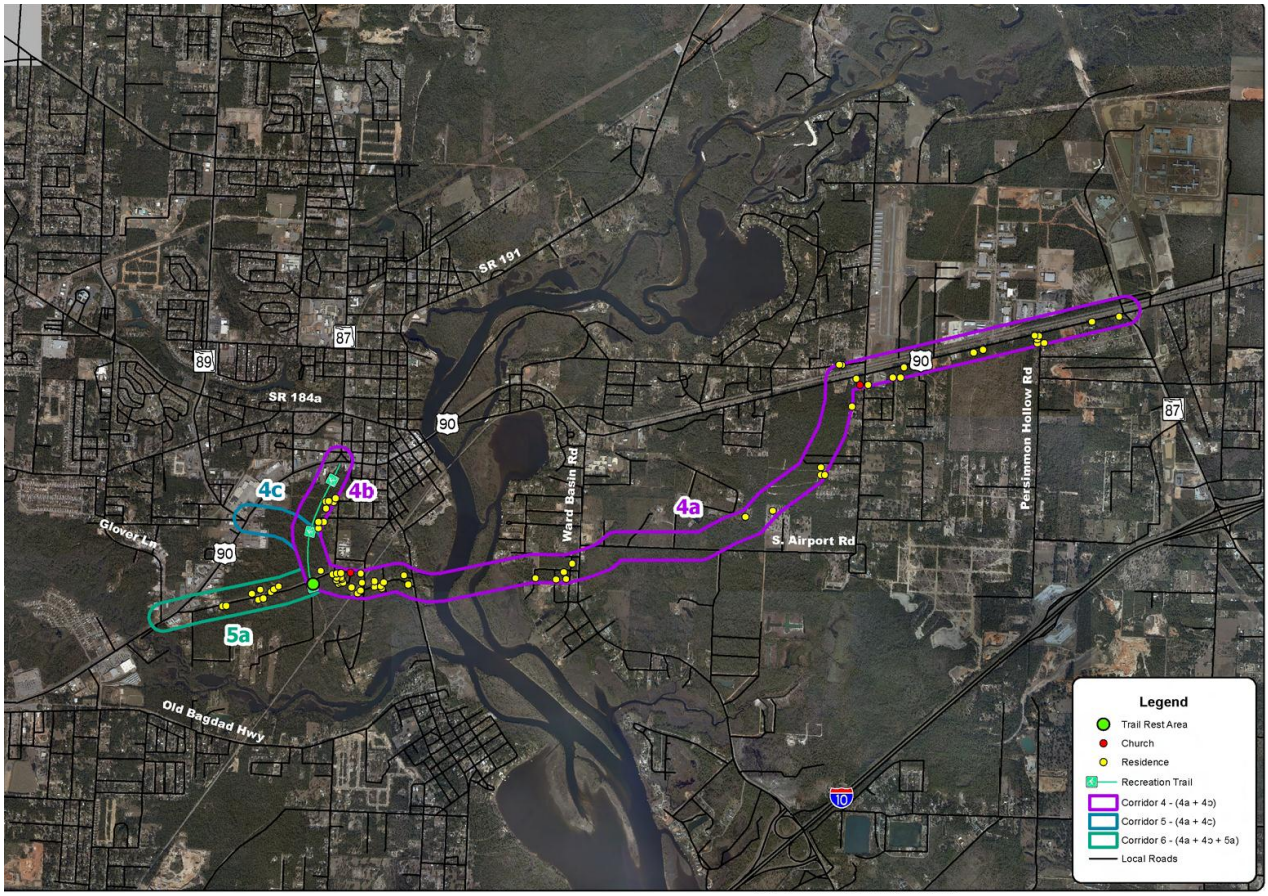

3.4 Cultural Resource Assessment Survey

3.4.1 Corridors 1, 2, and 3

Archaeological

There are no previously recorded archaeological sites located within the Area of Potential Effect (APE) for this corridor. However, there are four high Zones of Archeological Potential (ZAP)s and seven moderate ZAPs. These generally correspond to better-drained soils proximate to Blackwater River, Clear Creek, and other potable water sources. In addition, there is a historic archaeological ZAP associated with the swamp crossing for the railroad. The general setting is rural in nature and has undergone little disturbance except for timbering and agricultural use of the area. The area immediately south of the western limits of the corridor is residential.

Historical

Two previously recorded sites are located within this APE. 8SR1313 is Florida State Road 1, which is listed in the NRHP (Figure 3.10). 8SR1095 is a ca. 1925 Bungalow style residence that has not been evaluated by the SHPO in terms of NRHP eligibility. In addition to these, two historic railroads, one historic structure, and a historic cemetery not previously recorded are located within the APE for this corridor. The historic railroad corridors, buildings, and the cemetery do not appear to be eligible for listing in the NRHP.

Figure 3.10. *SR 1 (8SR1313), Facing West across East Milton Road. P10027A – SR 87 CRPA 5-2*

3.4.2 Corridors 4, 5, and 6

Archaeological

There is one previously recorded archaeological site located within the APE for this corridor. 8SR766, the Blackwater Air-Dry Pilings, is located on an island in the Blackwater River over which the proposed corridor will cross. The site has not been evaluated in the terms of NRHP eligibility. There are three high ZAPs and four moderate ZAPs. The moderate ZAPs generally correspond to better-drained soils proximate to Blackwater River and other potable water sources. The ZAP along the west side of the river was elevated to a high ZAP when the visual reconnaissance revealed historic structural remains along the bank of the river. In addition, there is another historic archaeological ZAP associated with early settlement along Taylor Road.

8SR766 is also considered a high ZAP. The general setting is rural in. There has been some development along US 90 and Taylor Street, and a few other residential areas in the vicinity.

3.4.3 Corridor 4 and 5

Historical

Two previously recorded sites are located within this APE. 8SR1313 is Florida SR 1, which is listed in the NRHP. 8SR1095 is a ca. 1925 Bungalow style residence that has not been evaluated by the SHPO in terms of NRHP eligibility. In addition to these, two historic railroads cross the corridor, and there are 10 historic buildings located within the APE for this Corridor. The historic railroad corridors and buildings are not considered eligible for listing in the NRHP as they do not appear to meet NRHP eligibility criteria. P10027A – SR 87 CRPA 5-3.

3.4.4 Corridor 6

Historical

Two previously recorded sites are located within this APE. 8SR1313 is Florida State Road 1, which is listed in the NRHP. 8SR1095 is a ca. 1925 Bungalow style residence that has not been evaluated by the SHPO in terms of NRHP eligibility. In addition to these, two historic railroads cross the corridor, and there are 15 historic buildings located within the APE for this corridor. The historic railroad corridors and buildings are not considered eligible for listing in the NRHP, as they do not appear to meet NRHP eligibility criteria.

Table 3.10 summarizes each corridor's potential impact to the cultural environment. Archeological and historic sites are the number of sites from the Florida Master Site File that fall within a corridor's area. Similar to the Elemental Occurrence data, social and cultural impacts are estimated by calculating the number of each parcel type, or archeological and historic site that fall within the limits of the corridor. For the archeological and historic sites, impacts are based on an 800-foot wide corridor in rural area, and a 400-foot wide corridor in the urban areas.

Table 3.10 Cultural Impacts

Corridor	Property Types Within Corridors		
	Historical Sites		Archaeological
	Listed	To be	
1	1	1	0
2	1	2	0
3	1	1	0
4	1	11	1
5	1	11	1
6	1	16	1

The background research, data analysis, and reconnaissance survey detailed in this report identified one potential cultural resource issue -- SR 1 (8SR1313) that is listed in the NRHP and is located within all of the potential corridors. Based on this initial research, no other historic resources appear to be eligible for listing in the NRHP. However, impacts to historical and archeological resources will require further analysis and potentially mitigation.

3.5 Social Impacts

Table 3.11 summarizes each corridor's potential impact to the social environment. For purposes of this comparison, social impacts were confined to impacts to residential and business properties as no community facilities would be impacted. As illustrated, Corridors 4, 5 and 6 impact the greatest number of Residential Parcels.

Corridor	Table 3.11 Social Impacts				Agriculture Parcels
	Residential Parcels		Manufactured Home	Business Parcels	
	Vacant	SF			
1	3	0	1	0	14
2	4	0	1	0	16
3	3	2	0	0	19
4	35	2	0	1	3
5	34	1	0	1	3
6	37	3	1	1	3

Of the northern corridors, Corridor 3 is the only corridor that impacts permanent residences. At this point, it appears that two residences will need to be taken near the 87A merge. Through alignment refinement, it may be possible to affect just one. The Figure below shows the location of the impacts. The property Owners of all impacted parcels have been notified of all public meetings to date.

Figure 3.11 Impacted Residences

Table 3.12 Environmental Analysis Summary						
Corridor Evaluation						
Environmental Criteria	Corridor Scoring					
	1	*2*	*3*	*4*	*5*	*6*
Wetlands	3	2	1	5	4	6
FNAI	3	2	1	6	4	5
Habitat	6	4	3	2	1	5
Floodplain	2	3	1	5	4	6
T/E Species**	1	1	1	1	1	6
OFW*	4	4	4	1	1	1
Black Bear	0	0	0	0	0	0
FFWCC 1-5	1	2	6	4	3	5
FFWCC 6-10*	4	4	4	1	1	1
Pristine Lands	4	5	6	2	1	3
FEMA	4	5	3	2	1	6
Noise	4	6	5	2	1	3
CRAS	1	3	1	4	4	6
Social	1	3	2	5	4	6
Total Score:	38	44	38	40	30	59

*** Tie between the Northern or Southern Corridors**
****Only Corridor 6 had impacts**

3.6 Alternative Build Corridors Estimated Costs

Costs of the Build Corridor Alternatives were calculated by totaling the right-of-way and construction cost estimates. Construction cost estimates were based on an average per-unit lane-mile cost for a four-lane urban section. The estimated costs of each alternative Corridor are summarized in Table 3.11.

Table 3.13: Summary of Costs for Alternative Build Corridors (in millions)

Corridor	Right-of-Way Costs	Construction Costs			Total Estimated Costs
		Roadway Cost	Low Level Bridge Cost	High Level Bridge Cost	
1	$2.24	$45.83	$55.4	N.A.	$103.47
2	$2.74	$57.88	$55.4	N.A.	$116.02
3	$2.20	$78.57	$42.6	N.A.	$123.37
4	$4.09	$42.75	$41.0	$59.8	$87.84/$106.64
5	$13.49	$41.47	$41.0	$59.8	$95.96/$114.76
6	$8.38	$50.70	$41.0	$59.8	$100.08/$118.88

Note: Blue text represents costs associated with high level bridge. High level bridges were not reviewed for the Northern Corridors due to the USGS ruling the waters were not commercially navigable in the crossing area.

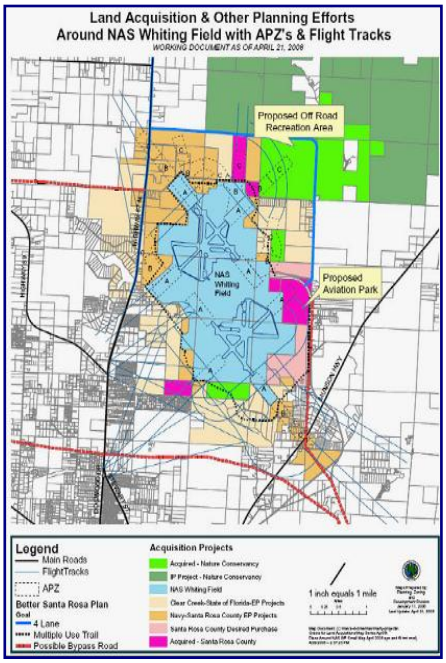

As seen in the above table, Corridor 3 has the lowest right-of-way costs due its more rural nature. In addition, a number of the properties impacted have already had their development rights purchased through programs with the Whiting Field Naval Air Station in an effort to keep development away from the naval air station. As shown in the map to the right, the dark beige areas are lands where the development rights have been purchased from property owners. The effort in this program is to prevent development that may create problems for Whiting Field in the future. A prime example is when an area develops as residential, and then later property owners complain about jet noise.

Corridor 5 has the lowest roadway cost because it is shortest in length and likewise, Corridor 3 has the highest roadway cost due to its longer length. Overall on a per mile basis including the bridge costs, Corridors 3 and 6 have the lowest costs at $15.55/mile, and $15.33/mile respectively. Generally, the northern corridors are more expensive because they are longer, and mostly due to the bridge length needed to clear the wide flood plain. Corridor 1 is the least expensive of the northern corridors.

4.0 PUBLIC INVOLVEMENT AND COORDINATION

At the initiation of the project, a series of four public kick-off meetings were conducted.

They were:

- ***Elected Official Meetings***

  A meeting was held with the Santa Rosa County, County Commissioners on February 25th, 2010; the City of Milton, City Council on March 9th, 2010; and the Florida/Alabama TPO on March 10, 2010. At these meetings, a brief overview was provided outlining the project's need, known issues, and the schedule. In addition, preliminary corridors were presented to the elected officials for comments and suggestions.

- ***Public Kick-off Meeting***

  A presentation of the project was given to the public in a similar format as the Elected Officials meetings on March 23rd, 2010 at the Santa Rosa County Auditorium. The project team members emphasized the purpose and need for the study, including the need for more efficient traffic circulations as well as environmental and military area protection constraints. During the meeting, the project team members also held informal discussions with the public. There were over 300 FDOT, County, and City officials; business owners; property owners and interested citizens at this meeting.

- ***Project Scoping Meeting***

  On July 29, 2010 the Project Team conducted a Scoping Meeting for the projects to enable the agencies to become more familiar with the project and corridor locations. The meeting was initiated with a presentation covering corridor locations, project issues, ETDM findings, and preliminary corridor analysis. Following the presentation a tour of the corridors was conducted. Representatives from 12 agencies, as well as, representatives from various FDOT departments, the County, the City, and Team Santa Rosa were invited to attend the meeting.

- ***ETDM Workshop***

  As part of District 3's quarterly ETDM Workshops, the District hosted a presentation on the SR 87 Connector PD&E Study. Much like the public kick-off meeting and scoping meeting, the presentation covered corridor locations, project issues, ETDM findings, and preliminary corridor analysis.

- ***Corridor Public Meeting***

  The next public meeting planned will be the Corridor Public Meeting. This meeting will be geared to presenting the public the analysis of the corridors, and outline issues associated with each of the corridors. As a result of this Corridor Analysis, a corridor will be selected and recommended for further study. Based on public comment, and the analysis and findings of this report, FHWA will be consulted for the selection of a preferred corridor.

- **City of Milton Endorsement**

  It should also be noted that the City of Milton passed and adopted Resolution #1160-10 on August 10, 2010 endorsing Corridor 1. The resolution was forwarded to FDOT Secretary Stephanie Kopelousos on September 9, 2010 to make the Department aware of their position. See Appendix B.

5.0 CORRIDOR EVALUATION SUMMARY

Through the course of this analysis, the six build corridors have been compared in terms of their effectiveness in meeting the stated project's Purpose and Need. In addition, four corridors appear to have fatal flaws. As can be seen through the course of this comparison and determination in meeting the project's Purpose and Need, it often involves a series of evaluations that may have competing objectives. For example: the least expensive corridor might provide the worst traffic service, or have the highest environmental impact. Therefore, how important is minimizing cost versus traffic service or environmental impacts? In order to quantify this dilemma, members of the consultant's team, reflecting a broad range of professional backgrounds, were asked to provide their perceived degree of importance (weights) for each of the four evaluation parameters (e.g. – purpose and need compatibility, traffic service, environmental impacts and cost). The resulting relative weights shown in Table 5.1 serve as an additional aid in evaluation, and are thus reflective of the average of the individual weighting results submitted by the team. Compliance with the project's Purpose and Need was judged to be the most important parameter with an overall weight of 40% (0.40), while cost was the least important at 10% (.10). In order to determine the final scoring, each individual rank was multiplied by the assigned parameter weight and the resulting score added for all evaluation parameters. The corridors with the lowest resulting total scores are the more successful options. For example, as previously stated, under the "Purpose and Need" parameter, Corridor 1 was the most successful, so this score was multiplied by the relative weight and a resulting score was obtained (1 x 0.4 = 0.4). According to the results shown on the table, Corridors 1, 2, and 3 perform well.

Table 5.1 Final Evaluation Summary

20% **Relative Weight**

0.40 **Resulting Score**

Evaluation / Parameter	40% Purpose and Need	20% Traffic	30% Environmental	10% Cost
1	1 / 0.40	1 / 0.20	2 / 0.60	4 / 0.40
2	3 / 1.20	2 / 0.40	5 / 1.50	5 / 0.50
3	2 / 0.80	4 / 0.80	2 / 0.60	6 / 0.60
4	5 / 2.00	5 / 1.00	4 / 1.20	1 / 0.10
5	6 / 2.40	6 / 1.20	1 / 0.30	2 / 0.20
6	4 / 1.60	2 / 0.40	6 / 1.80	3 / 0.30

When looking at Table 5.1, it can be seen that in comparing the corridors, the northern corridors perform better than the southern corridors. Regardless, as outlined at the beginning of this report that discussed the ETDM review, Corridor's 4, 5, and 6 are fatally flawed due to their passage through protected lands owned by the Water Management District. After two mitigation meetings with the North West Florida Water Management District, it was determined that there were no reasonable designs that would circumvent the detrimental impacts to the property. After discussing challenging design options (aerial spans), and discussing the financial ramifications relative to the debt bonds, such alternatives were decided to not be viable especially in light of the fact there are reasonable alternatives to the north that are viable options.

Likewise, FHWA has removed Corridor 3 from consideration for further evaluation since DEP, using Florida Forever funds, recently purchased additional lands where Corridor 3 was located. The purchase not only blocked passage of Corridor 3, it also blocked any other nearby potential Corridors that might have been explored.

As such, Corridors 1 and 2 remain as the viable potentials with no fatal flaws.

APPENDIX A

Corridor Alternative Detail Sheets

REVISIONS			
DATE	DESCRIPTION	DATE	DESCRIPTION

METRIC ENGINEERING
- ENGINEERS
- PLANNERS
- SURVEYORS

C. BRIAN FULLER, P.E. # 49524
METRIC ENGINEERING, INC.
615 CRESCENT EXECUTIVE CT
SUITE 524
LAKE MARY, FLORIDA 32746
TEL. (407) 644-1898
FAX. (407) 644-1921
FLORIDA CERT. NO. EB-0002294

STATE OF FLORIDA
DEPARTMENT OF TRANSPORTATION

ROAD NO.	COUNTY	FINANCIAL PROJECT ID
87	SANTA ROSA	4167483-22-01,-02 4167484-22-01,-02

SR 87 CONNECTOR STUDY AREA

FIGURE

$USER$ $DATE$ $TIME$ $FILE$

NOTICE: THE OFFICIAL RECORD OF THIS SHEET IS THE ELECTRONIC FILE SIGNED AND SEALED UNDER RULE 61G15-23.003, F.A.C.

END CORRIDOR I

BEGIN CORRIDOR I

N

0 400 2000

Feet

LEGEND

BRIDGE

URBAN ROADWAY
Ia+Ib+Ic

REVISIONS			
DATE	DESCRIPTION	DATE	DESCRIPTION

C. BRIAN FULLER, P.E. # 49524
METRIC ENGINEERING, INC.
615 CRESCENT EXECUTIVE CT
SUITE 524
LAKE MARY, FLORIDA 32746
TEL. (407) 644-1898
FAX. (407) 644-1921
FLORIDA CERT. NO. EB-0002294

● ENGINEERS
● PLANNERS
● SURVEYORS

STATE OF FLORIDA
DEPARTMENT OF TRANSPORTATION

ROAD NO.	COUNTY	FINANCIAL PROJECT ID
87	SANTA ROSA	4167483-22-01,-02 4167484-22-01,-02

CORRIDOR 1

FIGURE

$USER$ $DATE$ $TIME$ $FILE$

NOTICE: THE OFFICIAL RECORD OF THIS SHEET IS THE ELECTRONIC FILE SIGNED AND SEALED UNDER RULE 61G15-23.003, F.A.C.

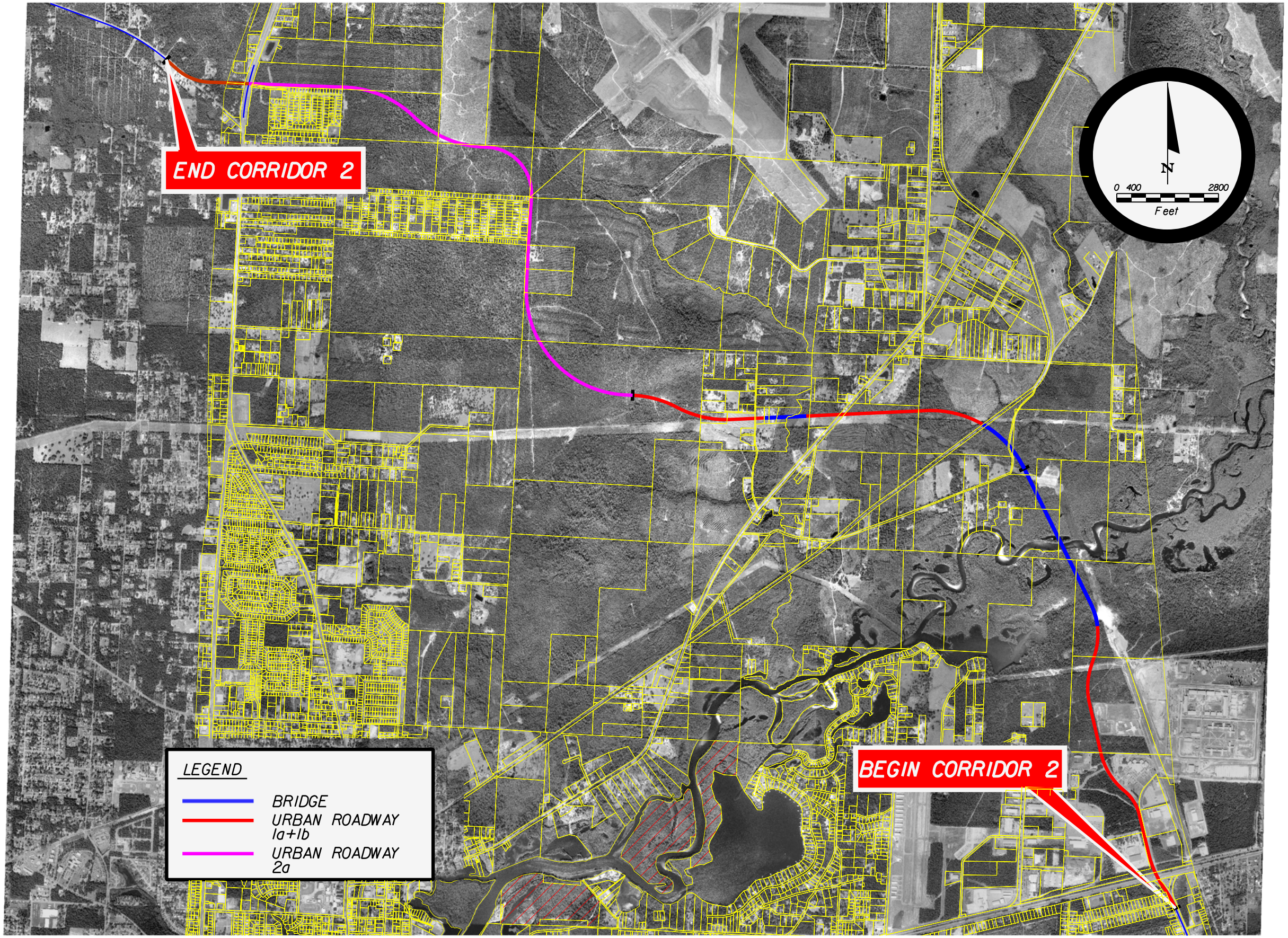

REVISIONS			
DATE	DESCRIPTION	DATE	DESCRIPTION

C. BRIAN FULLER, P.E. # 49524
METRIC ENGINEERING, INC.
615 CRESCENT EXECUTIVE CT
SUITE 524
LAKE MARY, FLORIDA 32746
TEL. (407) 644-1898
FAX. (407) 644-1921
FLORIDA CERT. NO. EB-0002294

● ENGINEERS
● PLANNERS
● SURVEYORS

STATE OF FLORIDA
DEPARTMENT OF TRANSPORTATION

ROAD NO.	COUNTY	FINANCIAL PROJECT ID
87	SANTA ROSA	4167483-22-01,-02 4167484-22-01,-02

CORRIDOR 2

FIGURE

$USER$ $DATE$ $TIME$ $FILE$

NOTICE: THE OFFICIAL RECORD OF THIS SHEET IS THE ELECTRONIC FILE SIGNED AND SEALED UNDER RULE 61G15-23.003, F.A.C.

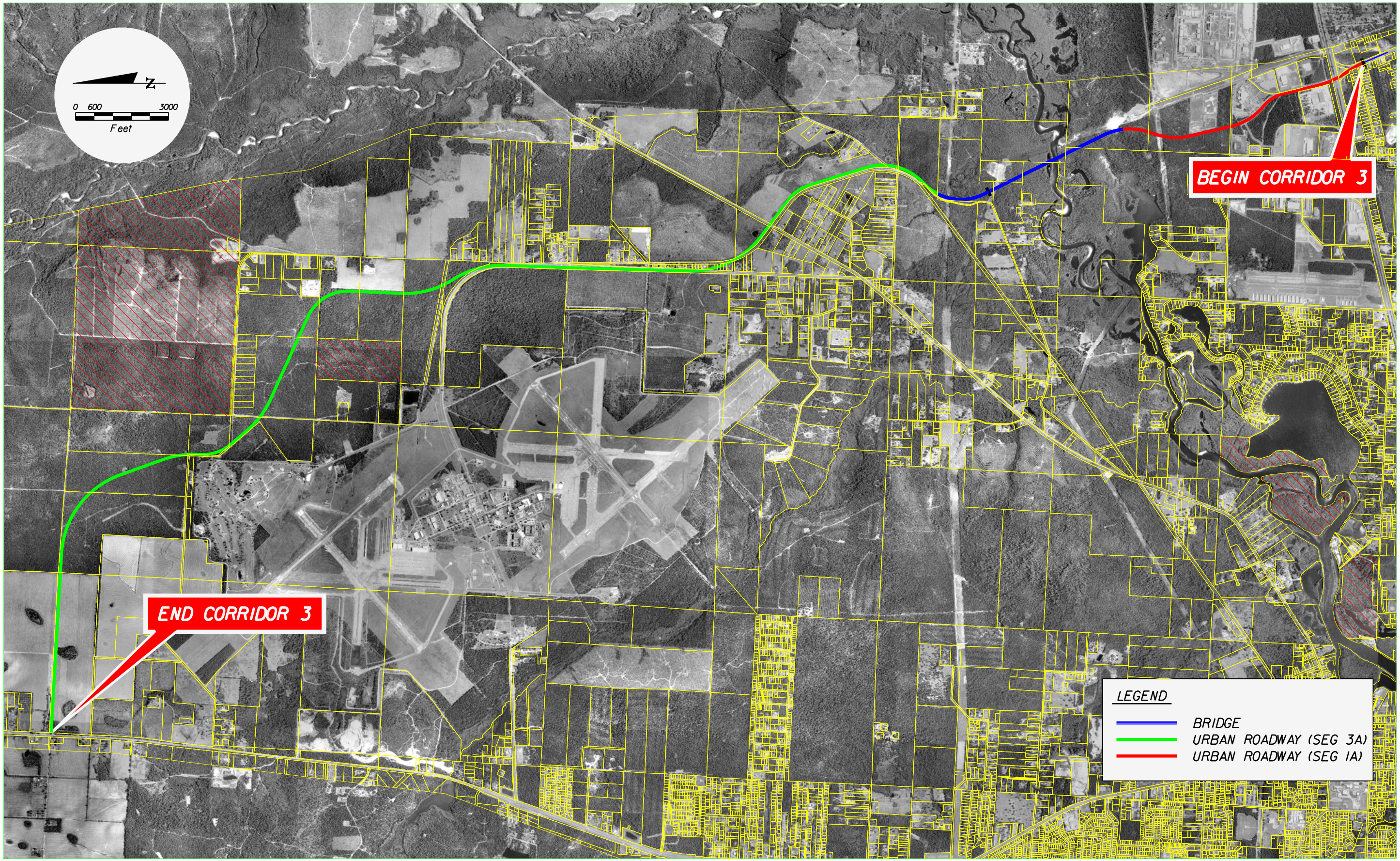

NOTICE: THE OFFICIAL RECORD OF THIS SHEET IS THE ELECTRONIC FILE SIGNED AND SEALED UNDER RULE 61G15-23.003, F.A.C.

REVISIONS			
DATE	DESCRIPTION	DATE	DESCRIPTION

METRIC ENGINEERING
● ENGINEERS
● PLANNERS
● SURVEYORS

C. BRIAN FULLER, P.E. # 49524
METRIC ENGINEERING, INC.
615 CRESCENT EXECUTIVE CT
SUITE 524
LAKE MARY, FLORIDA 32746
TEL. (407) 644-1898
FAX. (407) 644-1921
FLORIDA CERT. NO. EB-0002294

STATE OF FLORIDA
DEPARTMENT OF TRANSPORTATION

ROAD NO.	COUNTY	FINANCIAL PROJECT ID
87	SANTA ROSA	4167483-22-01,-02 4167484-22-01,-02

CORRIDOR 3
URBAN

FIGURE

METCAD601 12/1/2010 5:03:49 PM U:\PROJECTS\SR 87\PROJECT FILES\dgn\alignrd01_Corridor3 - Urban.dgn

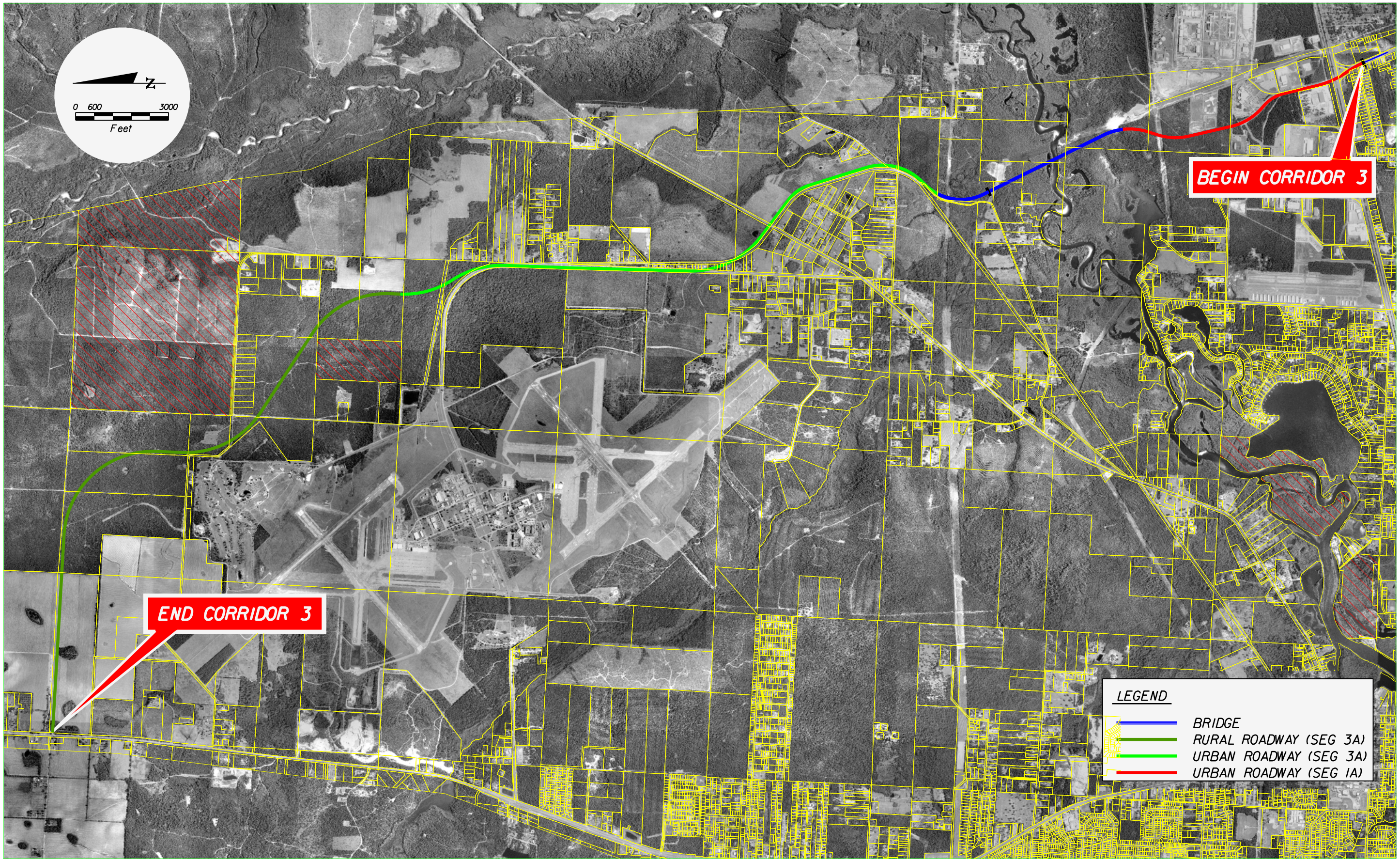

REVISIONS			
DATE	DESCRIPTION	DATE	DESCRIPTION

C. BRIAN FULLER, P.E. # 49524
METRIC ENGINEERING, INC.
615 CRESCENT EXECUTIVE CT
SUITE 524
LAKE MARY, FLORIDA 32746
TEL. (407) 644-1898
FAX. (407) 644-1921
FLORIDA CERT. NO. EB-0002294

● ENGINEERS
● PLANNERS
● SURVEYORS

STATE OF FLORIDA
DEPARTMENT OF TRANSPORTATION

ROAD NO.	COUNTY	FINANCIAL PROJECT ID
87	SANTA ROSA	4167483-22-01,-02 4167484-22-01,-02

CORRIDOR 3
URBAN AND RURAL

FIGURE

$USER$ $DATE$ $TIME$ $FILE$

NOTICE: THE OFFICIAL RECORD OF THIS SHEET IS THE ELECTRONIC FILE SIGNED AND SEALED UNDER RULE 61G15-23.003, F.A.C.

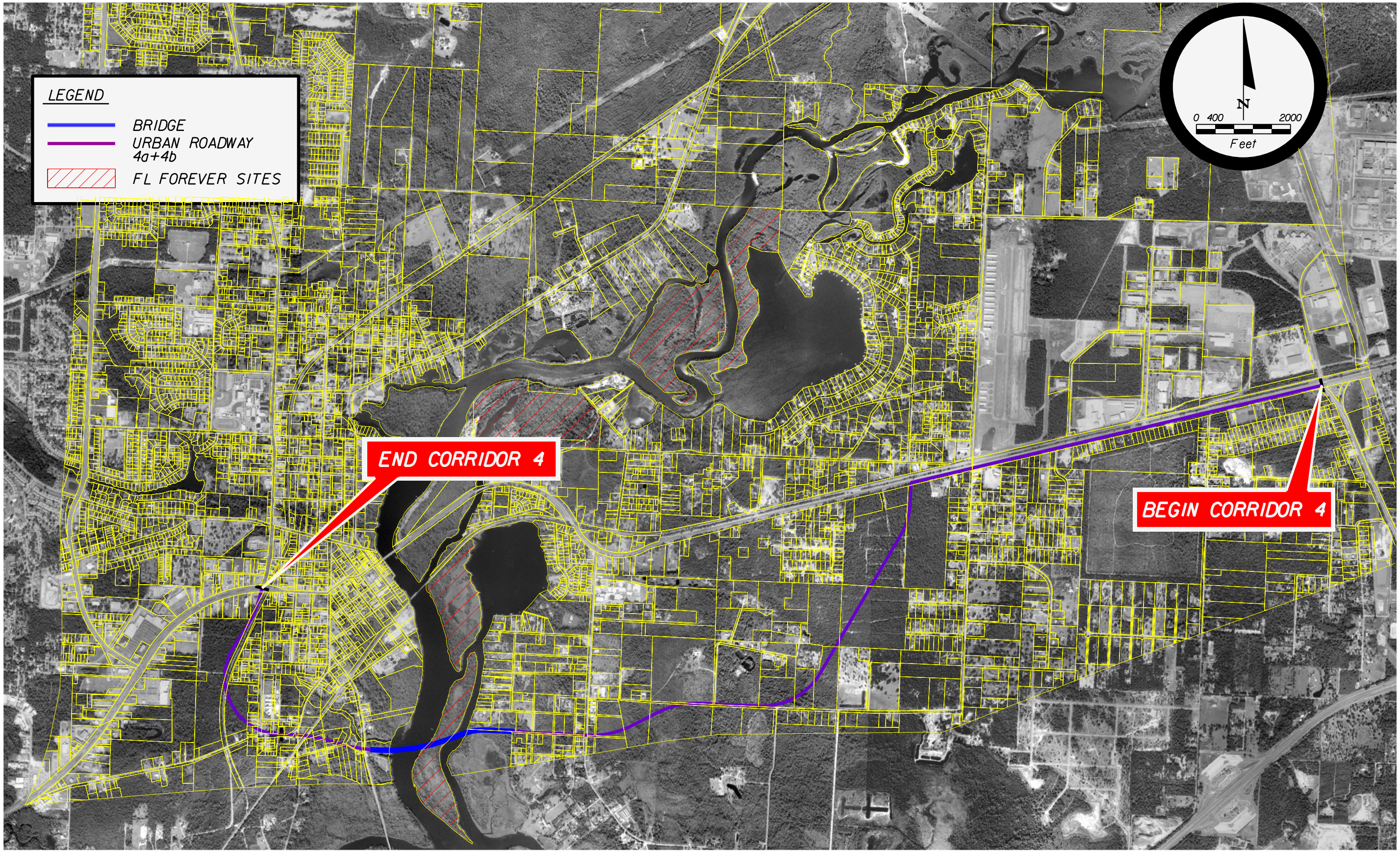

REVISIONS			
DATE	DESCRIPTION	DATE	DESCRIPTION

C. BRIAN FULLER, P.E. # 49524
METRIC ENGINEERING, INC.
615 CRESCENT EXECUTIVE CT
SUITE 524
LAKE MARY, FLORIDA 32746
TEL. (407) 644-1898
FAX. (407) 644-1921
FLORIDA CERT. NO. EB-0002294

● ENGINEERS
● PLANNERS
● SURVEYORS

STATE OF FLORIDA
DEPARTMENT OF TRANSPORTATION

ROAD NO.	COUNTY	FINANCIAL PROJECT ID
87	SANTA ROSA	4167483-22-01,-02 4167484-22-01,-02

CORRIDOR 4

FIGURE

$USER$ $DATE$ $TIME$ $FILE$

NOTICE: THE OFFICIAL RECORD OF THIS SHEET IS THE ELECTRONIC FILE SIGNED AND SEALED UNDER RULE 61G15-23.003, F.A.C.

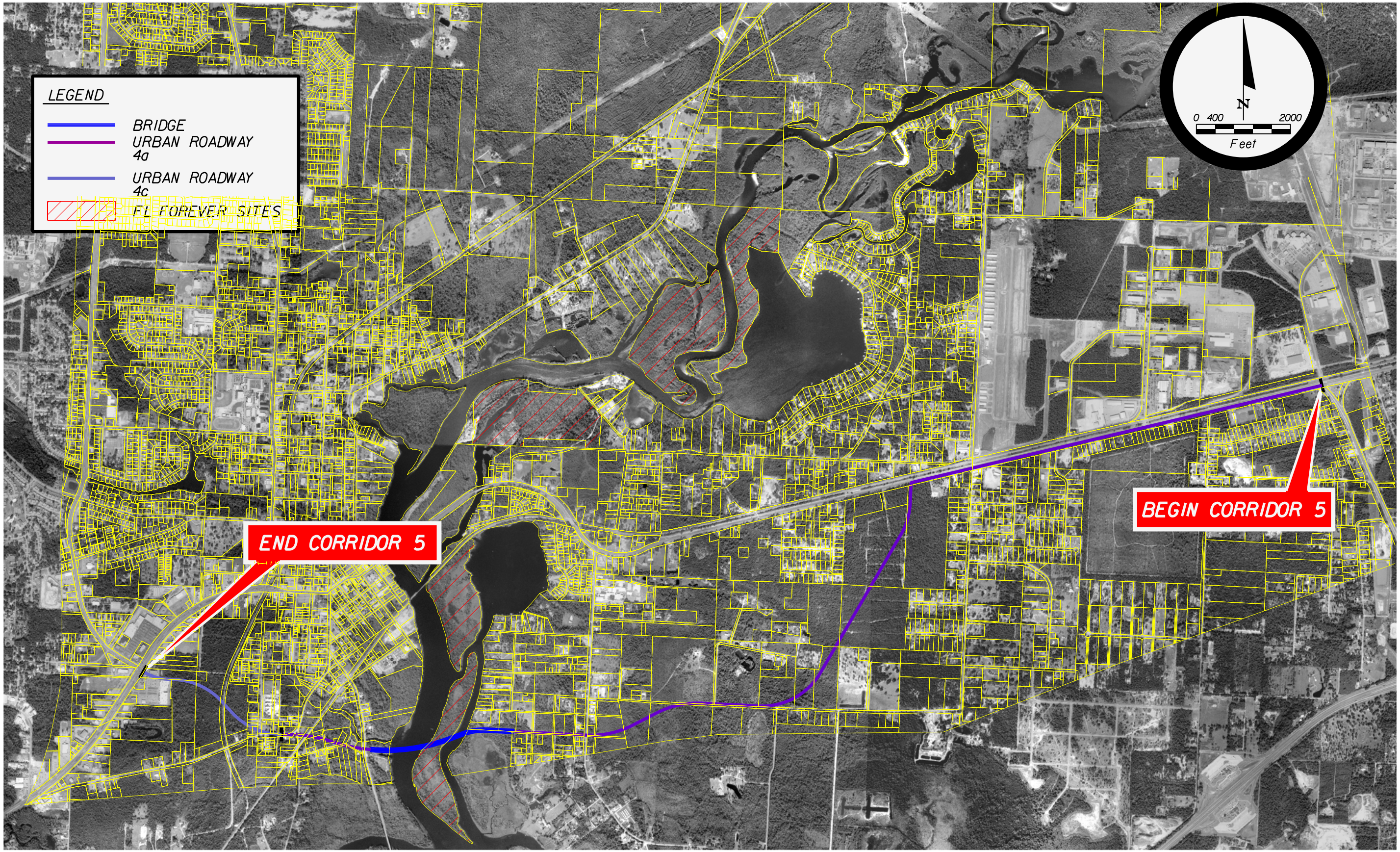

REVISIONS			
DATE	DESCRIPTION	DATE	DESCRIPTION

C. BRIAN FULLER, P.E. # 49524
METRIC ENGINEERING, INC.
615 CRESCENT EXECUTIVE CT
SUITE 524
LAKE MARY, FLORIDA 32746
TEL. (407) 644-1898
FAX. (407) 644-1921
FLORIDA CERT. NO. EB-0002294

● ENGINEERS
● PLANNERS
● SURVEYORS

STATE OF FLORIDA
DEPARTMENT OF TRANSPORTATION

ROAD NO.	COUNTY	FINANCIAL PROJECT ID
87	SANTA ROSA	4167483-22-01,-02 4167484-22-01,-02

CORRIDOR 5

FIGURE

$USER$ $DATE$ $TIME$ $FILE$

NOTICE: THE OFFICIAL RECORD OF THIS SHEET IS THE ELECTRONIC FILE SIGNED AND SEALED UNDER RULE 61G15-23.003, F.A.C.

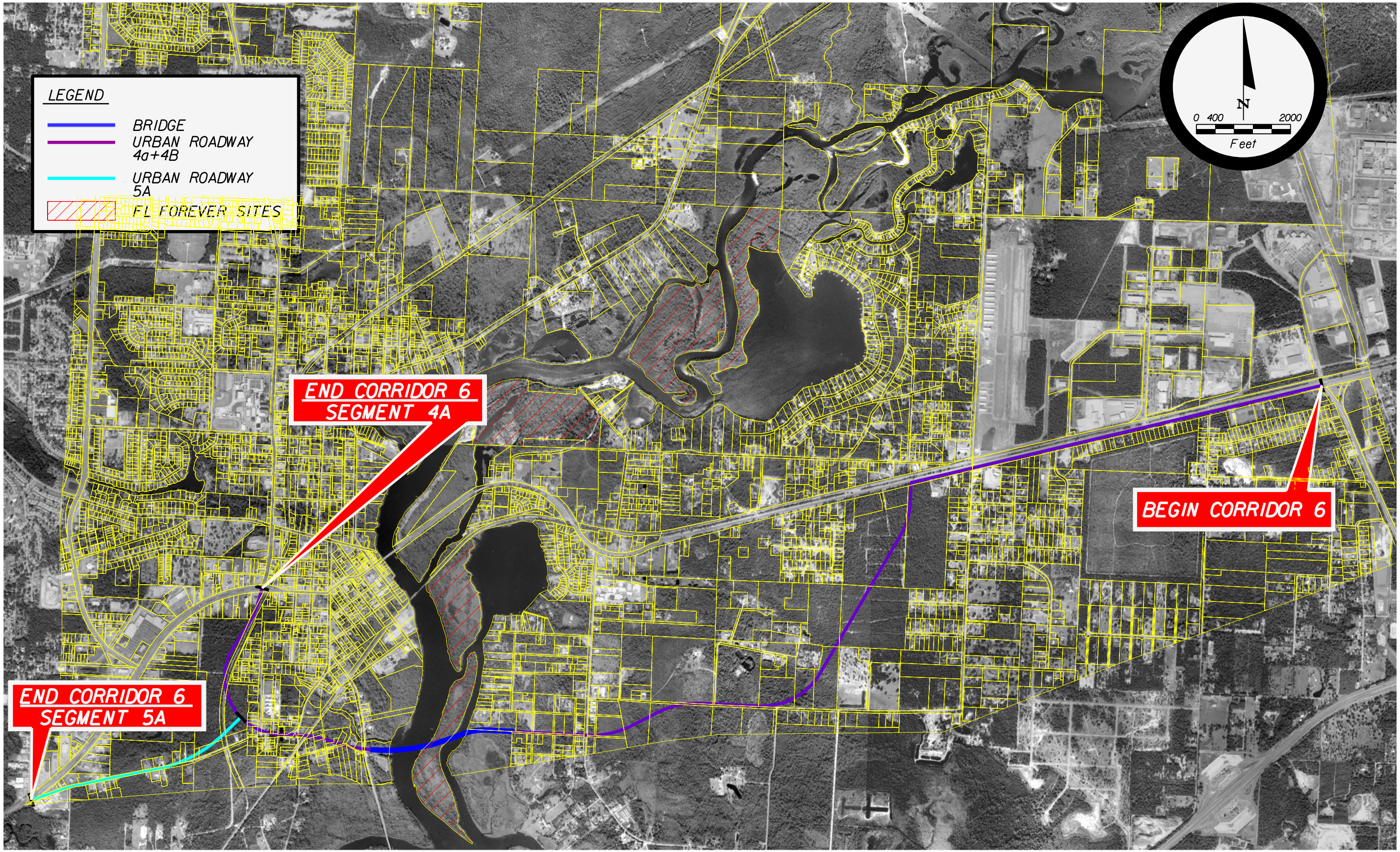

REVISIONS			
DATE	DESCRIPTION	DATE	DESCRIPTION

C. BRIAN FULLER, P.E. # 49524
METRIC ENGINEERING, INC.
615 CRESCENT EXECUTIVE CT
SUITE 524
LAKE MARY, FLORIDA 32746
TEL. (407) 644-1898
FAX. (407) 644-1921
FLORIDA CERT. NO. EB-0002294

● ENGINEERS
● PLANNERS
● SURVEYORS

STATE OF FLORIDA
DEPARTMENT OF TRANSPORTATION

ROAD NO.	COUNTY	FINANCIAL PROJECT ID
87	SANTA ROSA	4167483-22-01,-02 4167484-22-01,-02

CORRIDOR 6

FIGURE

$USER$ $DATE$ $TIME$ $FILE$

NOTICE: THE OFFICIAL RECORD OF THIS SHEET IS THE ELECTRONIC FILE SIGNED AND SEALED UNDER RULE 61G15-23.003, F.A.C.

APPENDIX B

City of Milton Endorsement of Corridor 1.

City of Milton

Office of the Mayor

September 9, 2010

Secretary Stephanie Kopelousos
Florida Dept. of Transportation
605 Suwannee St – MS 54
Tallahassee, FL 32399-0450

Dear Secretary Kopelousos:

The City of Milton would like to thank you for the allowing us to be involved in the Project Development and Environmental Study (PD&E) in regard to the Highway 87 Connector. The Study is reviewing four alternatives that will connect Highway 87 South to Highway 87 North. We believe a thorough review of all four alternatives will be of great benefit to the City, State, and FHA as it pertains to this issue, as well as to deal with future needs in and around this community. Therefore, the City of Milton respectfully requests that all alternatives remain in the study.

As you are aware the selected alternative will connect Highway 87 S to 87 N, either south of the City as is the case with alternative 4, or north as is the case with alternates 1, 2, and 3 (see attachment 1). The City has examined the alternates as presented and believes the best option is the one depicted as proposed segments 1a, 1b and 1c. We believe this option provides the best potential for long term economic impact on the City of Milton and the least potential for long term operational impact on NAS Whiting Field. We believe this option should also be very attractive to the state as to cost, schedule and environmental impact. With this in mind the City Council has endorsed the alternative identified in proposed segments 1a, 1b, and 1c and unanimously passed a resolution stating the same (see attachment 2).

The City Council has taken this action and provided this information to ensure you have a clear understanding of our desires. The City of Milton is working diligently to provide for the economic interest of the citizens of Milton and the surrounding area. The selection of option 1a, 1b and 1c would greatly help us in this quest and the protection of NAS Whiting Field, one of the economic engines of this area. It is the City's opinion that any alternative that could impact the

P. O. Box 909 • 6738 Dixon Street • Milton, Florida 32572 • (850) 983-5400 • Fax (850) 983-5411
~ Established 1844 ~

future expansion or operations of NAS Whiting Field should not be considered. Once again, thank you for the opportunity to participate in the process and your consideration of our request.

Sincerely,

Guy Thompson
Mayor

GT:pkh

Cc: Senator Durell Peaden, Jr.
Senator Bill Nelson
State Representative Jeff Miller
State Representative Greg Evers
Board of County Commissioners
West Florida Regional Planning Council
Florida Highway Administration
Florida/Alabama TPO
Captain Peter Hall, NAS Whiting Field
Metric Engineering

C:\My Files\Correspondence\Miscellaneous\Hwy 87 Support Letter2.docx

RESOLUTION #1160-10

A RESOLUTION OF THE CITY COUNCIL OF THE CITY OF MILTON, FLORIDA SUPPORTING CORRIDOR 1 FOR THE SR 87 CONNECTOR

WHEREAS, the City of Milton is responsible for local planning; and

WHEREAS, this corridor should be identified in a manner consistent with the City's plans; and

WHEREAS, the city's proposed evaluation and appraisal report identifies this corridor to enhance the City's and County's economic development opportunities; and

WHEREAS, in the National Highway System Act of 1995, Congress directed that designs for new and reconstructed highways take into account: the community impact of road construction; and

WHEREAS, a well-constructed and well-designed corridor 1 improves mobility, improves area commercial activity and thus increases community property values; and

WHEREAS, funding is limited for development of new roads and this corridor is cost effective; and

WHEREAS, the other corridors cross areas classified by State agencies as "critical wildlife habitat"; and

WHEREAS, construction of the other proposed corridors may severely limit Whiting Fields ability to respond to a changing mission environment; and

WHEREAS, Whiting Field is a vital part of the area's economic base; and

WHEREAS, there is no better route to SR 87 N which will open new lands and provide for economic growth:

NOW, THEREFORE BE IT RESOLVED: that the City Council of the City of Milton believes it to be in the best interest of the City, County, and State to extend SR 87 N to a point at or about the Southern split of SR 87 and SR 89.

PASSED AND ADOPTED by the City of Milton, this 10th, day of August, 2010.

By: _____
Guy Thompson, Mayor

ATTEST: _____
Dewitt Nobles, City Clerk

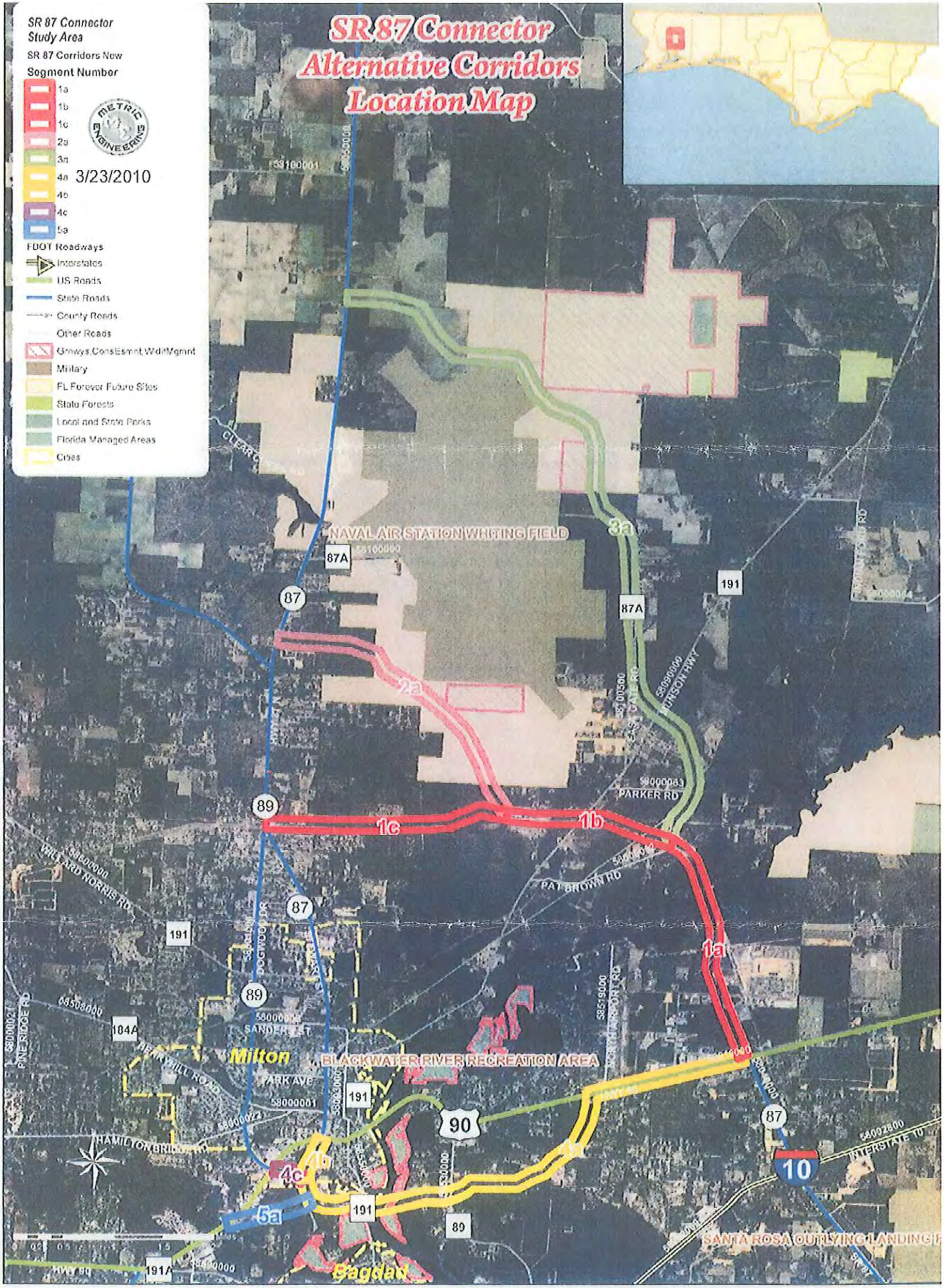
SR 87 Connector Alternative Corridors Location Map
SR 87 Connector Study Area
SR 87 Corridors New Segment Number
1a
1b
1c
2a
3a
4a
4b
4c
5a
3/23/2010
FDOT Roadways
Interstates
US Roads
State Roads
County Roads
Other Roads
Grnways,ConsEsmnt,WdlfMgmnt
Military
FL Forever Future Sites
State Forests
Local and State Parks
Florida Managed Areas
Cities
NAVAL AIR STATION WHITING FIELD
BLACKWATER RIVER RECREATION AREA
Milton
Bagdad
SANTA ROSA OUTLYING LANDING F
PARKER RD
PAT BROWN RD
WILLARD NORRIS RD
PARK AVE
HAMILTON BRIDGE RD
INTERSTATE 10
87A
87
89
191
184A
191A
90
10

APPENDIX C GIS shapefile metadata

1. National Wetland Inventory

ETAT.NWIP_OCT10 [GIS Shapefile]. Washington D.C.: US Fish and Wildlife Service, Division of Habitat and Resource Conservation, 2010.

2. FNAI Wetland Priorities

Wetlds_v3 [GIS Shapefile]. Tallahassee, Florida: Florida Natural Areas Inventory, 2008.

3. FFWCC Strategic Habitat Conservation Area Priorities

Shca_v3 [GIS Shapefile]. Tallahassee, Florida: Florida Fish and Wildlife Conservation Commission, 2008.

4. FNAI Floodplains

Floodpl_v3 [GIS Shapefile]. Tallahassee, Florida. Florida Natural Areas Inventory, 2007.

5. FNAI T&E Species

FNAI_FLEO_ERC_20091202_Sant_2 [GIS Shapefile]. Tallahassee, Florida: Florida Natural Areas Inventory, 2009.

6. OFW acres

ofw_other_jan11 [GIS Shapefile}. Tallahassee, Florida. Florida Department of Environmental Protection, 2011.

7. Black Bear Road Kills

Bearrdkill_2009 [GIS Shapefile]. Tallahassee, Florida. Florida Fish and Wildlife Conservation Commission, Fish and Wildlife Research Institute, 2009.

8. FWC Integrated Wildlife Habitat Ranking System

Iwhrs_2007 [GIS Shapefile}. Tallahassee, Florida. Florida Fish and Wildlife Conservation Commission, Fish and Wildlife Research Institute, 2007.

9. Pristine Lands (FLUCCS)

lu_nwfwmd_2007 [GIS Shapefile]. Tallahassee, Florida. Florida Department of Environmental Protection, Bureau of Watershed Restoration, 2011

10. Special Flood Hazard (FEMA)

dfirm_fldhaz_feb09 [GIS Shapefile]. Washington D.C. Federal Emergency Management Agency, 2009

Appendix D.

Table 3.5

Table 3.5 Network Segment Performance

SR 87 CONNECTOR PD&E STUDY - AADT (2 WAY) FOR ALL ALTERNATIVES

ROADWAY FROM	TO	DIST (MIL	2035 CF CAPA-CITY	NO OF LANES PER DIR	2006-AADT	35-H-CF AADT	35-R 2035-NB AADT	35-X Alt 1-AADT	35-Y Alt 2-4LD AADT	35-Z Alt 3-4LD AADT	35-L Alt 4-4LD AADT	35-M Alt 5-4LD AADT	35-I Alt 6-4LD AADT	35-U Alt 1-2L AADT	35-V Alt 2-2L AADT	35-W Alt 3-2L AADT	35-J Alt 4-2L AADT	35-K Alt 5-2L AADT	35-D Alt 6-2L AADT
I-10 / SR 8																			
SR 281 /	Garcon Point	3.92	95,837	1.0	39,279	56,633	57,020	56,983	57,531	57,448	57,899	58,215	56,884	57,313	56,842	57,112	57,992	57,519	57,925
Garcon	Ward Basin	2.06	8,450	2.0	32,389	45,192	47,378	45,182	45,558	46,161	44,684	44,553	44,113	45,730	44,966	46,150	44,618	44,697	44,590
Ward	SR 87 S / E.	2.78	19,441	1.8	27,419	37,297	42,159	36,612	37,892	39,817	39,347	39,419	38,779	37,366	37,043	39,671	40,789	39,513	40,221
SR 87 S	Log Lake	13.6	14,919	1.9	19,342	24,586	27,160	27,620	27,940	28,217	27,055	27,193	27,113	27,278	27,587	28,136	27,093	27,119	27,088
US 90 / SR 10																			
SR 281 /	Parkmore	0.25	46,200	1.0	35,824	47,090	47,404	45,695	45,891	46,078	47,351	47,747	50,433	46,375	45,476	46,342	48,133	48,077	48,939
Parkmo	Glover Lane	0.74	46,200	1.0	36,183	46,988	47,310	45,730	45,907	46,073	46,522	46,822	49,778	46,338	45,543	46,322	47,814	47,088	48,722
Glover	SR 89 /	0.70	15,443	2.2	29,792	38,952	41,095	39,779	39,889	40,007	34,166	39,173	34,059	40,211	39,639	40,272	35,830	37,638	35,045
SR 89 /	SR 87N /	0.64	54,368	1.0	13,104	16,526	21,192	21,668	21,699	21,329	16,539	16,819	14,336	21,676	21,380	21,421	16,798	16,919	15,547
SR 87N	Canal Street	0.27	51,510	1.0	12,279	14,625	20,528	19,239	19,124	19,449	11,482	16,698	12,277	18,918	19,494	19,455	14,168	17,853	13,673
Canal	Elmira Street	0.14	10,200	1.0	8,375	11,826	18,227	15,208	15,187	15,574	10,934	14,877	11,912	15,310	15,088	15,879	14,420	14,188	14,156
Elmira	Broad Street /	0.06	4,800	1.0	8,100	11,588	18,046	15,213	15,187	15,450	10,829	14,773	11,811	15,272	15,052	15,752	14,277	14,045	13,998
Broad	Johnson	0.69	29,481	1.0	20,969	28,245	29,608	22,225	22,794	25,050	20,349	18,872	19,234	22,988	23,208	25,094	21,378	20,464	21,309
Johnson	Dale St /	0.42	8,234	1.4	19,342	25,780	27,425	20,152	20,715	22,914	17,968	16,614	16,835	20,910	21,135	22,949	19,142	18,236	19,078
Dale St	Airport Road	1.26	9,461	1.0	14,982	16,252	17,807	12,431	12,806	14,241	14,625	13,936	14,191	12,824	13,060	14,183	15,481	15,017	15,965
Airport	Industrial	0.97	10,200	1.0	15,622	17,397	19,579	14,297	14,682	16,149	23,380	23,713	24,282	14,689	14,932	16,078	22,390	23,200	23,235
Industri	SR 87 S / E.	0.75	100,000	1.0	14,822	16,377	19,400	14,609	14,916	16,165	23,034	23,362	23,898	14,937	15,157	16,086	22,065	22,874	22,888
SR 87 S	S. A. Jones	5.83	7,446	1.0	10,160	13,966	8,223	8,791	8,599	8,374	8,316	8,226	8,376	8,743	8,635	8,378	8,274	8,299	8,358
HAMILTON																			
Glover	SR 89 /	0.54	9,314	1.4	2,394	4,623	4,467	4,489	4,463	4,484	4,298	5,660	3,684	4,455	4,499	4,490	4,365	5,577	4,336
SR 89 /	Berryhill Road	0.47	12,885	1.0	1,749	2,475	2,751	2,748	2,743	2,736	1,733	1,015	1,730	2,735	2,734	2,753	2,167	1,170	2,250
BERRYHILL ROAD																			
Glover	SR 89 /	0.57	47,219	1.0	8,676	10,712	11,108	10,807	11,172	11,196	11,825	10,216	11,303	11,185	11,143	11,188	11,533	11,233	11,557
SR 89 /	SR 87 N /	0.79	64,937	1.3	5,729	8,229	8,948	7,911	8,263	8,495	9,880	5,608	8,948	8,196	8,392	8,523	9,054	6,430	9,017
SR 87 N	Canal Street	0.26	39,493	1.4	9,209	12,327	8,986	6,783	7,262	7,900	4,667	3,015	4,279	7,150	7,490	7,913	4,729	3,924	4,611
Canal	Broad Street	0.10	100,000	1.0	8,629	9,047	6,059	5,040	5,580	6,274	4,570	2,968	4,191	5,348	5,887	6,123	4,642	3,813	4,541
PARK AVENUE																			
SR 89 /	SR 87 N /	0.75	13,236	1.3	1,332	1,492	1,538	1,538	1,534	1,530	1,817	1,788	1,763	1,518	1,540	1,510	1,797	1,707	1,777
WILLIARD NORRIS ROAD /																			
Northro	SR 89 /	1.71	18,919	1.5	6,786	8,918	8,720	8,871	8,291	8,548	8,965	8,993	8,691	8,563	8,302	8,538	8,934	9,008	8,864
SR 89 /	SR 87 N /	0.68	5,587	1.0	4,496	6,844	4,847	4,454	5,011	5,472	6,162	4,992	5,526	4,613	5,161	5,533	6,086	4,924	5,875
LANGLEY STREET /																			
SR 87 N	NAS Whiting	0.94	13,175	1.9	9,736	11,036	11,052	11,196	11,260	11,042	11,060	11,050	11,058	11,204	11,274	11,042	11,060	11,050	11,058

ROADWAY FROM	TO	DIST (MIL	2035 CF CAPA-CITY	NO OF LANES PER DIR	2006-AADT	35-H-CF AADT	35-R 2035-NB AADT	35-X Alt 1-AADT	35-Y Alt 2-4LD AADT	35-Z Alt 3-4LD AADT	35-L Alt 4-4LD AADT	35-M Alt 5-4LD AADT	35-I Alt 6-4LD AADT	35-U Alt 1-2L AADT	35-V Alt 2-2L AADT	35-W Alt 3-2L AADT	35-J Alt 4-2L AADT	35-K Alt 5-2L AADT	35-D Alt 6-2L AADT
WHITING FIELD																			
SR 87 N	NAS Whiting																		
GEORGE																			
SR 87 N	NAS Whiting																		
SPRINGHILL ROAD / NEAL																			
SR 87 N	Lewis Road	0.60	80,634	1.0	1,354	1,417	1,428	1,310	1,328	1,281	1,405	1,404	1,405	1,310	1,329	1,282	1,404	1,404	1,404
Lewis	Munson	6.16	20,097	1.0	258	323	331	214	222	199	304	304	304	214	224	198	304	304	304
SR 281 / AVALON																			
I-10	US 90 / SR 10	4.88	34,895	1.4	14,226	22,797	23,259	20,488	20,223	20,870	19,650	19,446	19,722	21,165	20,439	21,260	20,152	19,704	20,006
SR 89 /																			
US 90 /	Hamilton	0.53	19,811	1.0	20,884	26,852	27,178	25,474	25,629	26,075	25,401	31,124	25,618	25,871	25,623	26,225	26,216	30,012	26,295
Hamilto	Berryhill Road	0.25	18,030	1.0	19,928	25,846	27,178	25,550	25,656	26,142	24,696	30,042	25,484	25,912	25,728	26,283	25,777	29,113	25,959
Berryhil	Park Avenue	0.29	48,682	1.7	20,094	26,269	26,989	24,293	24,482	25,161	25,465	27,826	25,855	24,653	24,586	25,350	25,825	26,622	25,923
Park	Williard N.	0.99	25,580	1.5	17,669	22,860	23,504	20,871	21,072	21,772	21,807	24,814	22,269	21,223	21,164	21,917	22,167	23,486	22,293
Williard	SR 87 N /	1.51	11,287	1.0	9,216	14,684	13,673	13,146	12,414	13,126	12,866	15,887	13,429	12,741	12,141	13,267	13,184	14,358	13,148
SR 87 N	West	1.81	45,835	1.1	6,510	8,519	8,395	11,318	9,902	4,246	8,770	8,459	8,468	10,689	9,770	4,242	8,787	8,401	8,645
SR 87 N / Stewart																			
US 90 /	Berryhill Road	0.26	60,813	1.6	12,762	14,952	22,778	17,576	17,715	19,422	30,859	25,972	31,068	17,365	17,932	19,493	30,744	25,835	29,988
Berryhil	Park Avenue	0.34	9,600	1.3	17,799	20,862	22,237	16,970	17,117	18,133	26,745	24,905	27,632	16,748	17,561	18,204	27,222	24,789	26,379
Park	Magnolia	1.01	31,306	1.2	17,464	22,539	22,001	14,595	14,809	16,756	24,714	21,498	24,132	14,572	15,359	16,831	24,568	22,649	24,161
Magnoli	SR 89 /	1.67	32,013	1.0	11,594	14,114	14,686	7,273	6,854	8,151	15,930	13,181	15,645	7,085	7,284	8,254	15,676	14,654	15,564
SR 89 /	SR 89 North	1.57	28,234	1.5	20,783	26,376	26,273	30,063	18,424	18,974	26,743	26,321	26,474	29,431	18,612	19,156	26,774	26,275	26,637
SR 89	Langley	1.20	9,870	1.0	13,760	16,250	16,224	16,939	16,322	13,288	16,353	16,335	16,345	16,924	16,321	13,477	16,346	16,333	16,339
Langley	Whiting Field	0.45	100,000	1.0	8,605	9,854	9,836	10,060	10,226	6,898	9,899	9,903	9,898	10,028	10,151	7,081	9,895	9,902	9,891
Whiting	Springhill Rd /	5.59	30,438	1.0	7,463	8,732	8,707	8,957	9,118	8,765	8,769	8,773	8,766	8,922	9,049	8,899	8,764	8,770	8,759
ALABAMA ST & HENRY ST (CR 191																			
South	US 90 / SR 10	0.41	30,553	1.0	7,768	9,764	9,064	10,124	9,826	9,532	1,190	5,186	1,164	9,600	10,209	9,357	2,062	7,122	2,162
US 90 /	North of US	0.19	7,750	1.0	2,995	5,386	4,750	1,958	1,906	1,875	158	211	150	2,029	1,825	2,038	174	285	150
BROAD STREET & WILLING STREET																			
US 90 /	Berryhill Road	0.11	5,880	1.0	13,186	16,881	11,836	8,525	9,011	10,815	10,030	7,271	7,919	9,068	9,556	10,601	9,261	9,427	9,697
Berryhil	Munson	0.63	10,805	1.0	6,784	9,841	7,714	3,694	3,654	4,821	5,697	4,442	3,967	3,927	3,859	4,757	4,814	5,750	5,342
WARD BASIN																			
I-10	South Airport	1.73	6,855	1.0	2,788	7,464	8,008	5,872	6,068	6,950	12,952	12,717	12,990	6,236	6,242	7,036	12,872	13,286	12,466
US 90 /	US 90 / SR 10	0.93	6,471	1.9	2,231	6,478	7,006	4,983	5,175	6,027	1,536	1,942	1,919	5,345	5,343	6,116	1,501	1,614	1,760
AIRPORT ROAD																			
South	US 90 / SR 10	0.97	100,000	1.0	192	492	704	681	684	770	779	733	772	680	682	766	745	697	727
US 90 /	North of US	0.85	10,200	1.0	450	896	1,314	1,186	1,192	1,272	1,194	1,192	1,190	1,184	1,190	1,278	1,194	1,192	1,191

ROADWAY FROM	TO	DIST (MIL	2035 CF CAPA-CITY	NO OF LANES PER DIR	2006-AADT	35-H-CF AADT	35-R 2035-NB AADT	35-X Alt 1-AADT	35-Y Alt 2-4LD AADT	35-Z Alt 3-4LD AADT	35-L Alt 4-4LD AADT	35-M Alt 5-4LD AADT	35-I Alt 6-4LD AADT	35-U Alt 1-2L AADT	35-V Alt 2-2L AADT	35-W Alt 3-2L AADT	35-J Alt 4-2L AADT	35-K Alt 5-2L AADT	35-D Alt 6-2L AADT
SR 87 S																			
Hickory	I-10	2.10	34,281	1.2	16,125	19,206	20,714	21,272	21,530	21,482	20,835	21,169	20,825	21,568	21,140	21,532	21,416	20,811	21,442
I-10	US 90 / SR 10	1.24	11,179	1.9	12,343	13,311	17,140	24,434	24,654	23,891	18,201	18,578	18,567	23,514	23,852	23,697	17,416	18,146	17,982
US 90 /	Correction																		
MUNSON																			
SR 87 N	Broad Street	0.31	10,243	1.0	6,508	9,602	7,746	3,587	3,593	4,695	7,115	3,845	5,378	3,830	3,805	4,630	4,862	5,268	5,194
Broad	Munson Lane	0.45	9,600	1.0	3,088	3,169	3,306	1,480	1,515	1,412	3,306	3,307	3,308	1,478	1,533	1,412	3,298	3,296	3,297
Munson	CR 87 A	1.91	54,712	1.5	3,661	3,754	3,899	1,900	2,167	1,740	3,892	3,893	3,895	1,884	2,105	1,738	3,885	3,884	3,884
CR 87 A	Springhill	7.39	10,131	1.0	1,667	1,701	1,822	2,229	2,192	2,030	1,798	1,801	1,802	2,241	2,209	2,035	1,792	1,793	1,792
CR 87 A / WHITING FIELD CIRCLE /																			
Munson	NAS Whiting	2.47	5,920	1.0	1,984	2,054	2,058	2,120	2,118	777	2,056	2,056	2,056	2,120	2,118	773	2,056	2,056	2,056
OLD US 90																			
Canal St	US 90 / SR 10	1.03	4,800	1.0	450	2,837	765	730	753	764	8,300	1,228	13,458	740	732	751	7,881	4,075	10,105
SR 87 CONNECTOR (ALTs 1 - 2 - 3)																			
US90 /	CR 191 /			1 OR 2				17046	16,519	13,420				15746	15538	13244			
CR 191	SR 87 N			1 OR 2				14156	13,945	11,128				13654	13065	10957			
SR 87															**4 Lanes**	**2 Lanes**			
US90 / SR 10	WARD BASIN ROAD	1.87	7,362	1 OR 2		**2006-Val:**	**- Validated 2006 NWFRP**	**- 2006-Val**			6,784	7,854	8,130	**ALT 1**	35-X	35-U	4,971	6,291	5,353
WARD	HENRY ST /	0.87	5,920	1 OR 2							18,614	20,064	20,770	**ALT 2**	35-Y	35-V	16,299	18,456	16,843
HENRY ST / CR 191	Old US 90	0.33	9,600	1 OR 2		**35-H-CF:**	**Cost Feasible 2035**	**35-H-CF**			27,878	25,595	30,100	**ALT 3**	35-Z	35-W	24,126	20,939	24,585
Old US	SR 87 N OR										18,252	23,176	15,524	**ALT 4**	35-L	35-J	15,216	16,075	13,635
SR 87 N OR SR 89	US 90	1.03	20,492	1 OR 2		**35-R:**	**Revised Cost Feasible model**	**35-R**			8,300	1,228	13,458	**ALT 5**	35-M	35-K	7,881	4,075	10,105
							based on subarea refinement							**ALT 6**	35-I	35-D			

Appendix E. Regional Freight Network Plan excerpts

1. The Freight Movement Study lists SR 87 as a Regional Freight Corridor:

SR 87 US 98 US 90	SIS	750 – 1,800	C
SR 87 US 90 Alabama Line	RTN	1,000 – 3,000	D

2. The Beltway is included on the freight network map to connect SR 87 S to SR 87 N. It is called "Future By-Pass"
3. SR 87 is cited as a Corridor 'Critical to Business Success'
4. Finally and probably most importantly, In Table 2-2, "Freight Issues and Needs", the following was stated as a need:
   a. SR 87 Gulf Coast to I-65 (Alabama) Lacks strategic connection
   b. US 90 E. Downtown Milton to SR 87, Congestion & delay, incompatibility;

      evaluate truck signage through downtown
5. Projects List from Freight Network Plan:

   Santa Rosa County

   • SR 87, US 90 north to Whiting Field and south to I-10; eastern and southern bypasses to divert traffic around Milton and serve Whiting Aviation Park; PD&E study underway; construction unfunded.
6. In Table 4-2, Identification and Prioritization of Issues and Needs, the following project tied for 3rd with a cumulative score of 14

   Santa Rosa US 90, Downtown Milton to SR 87, FA22 1, Congestion & delay, incompatibility; evaluate truck signage through downtown, 1,000-3,000
7. Bridge Replacement Project # 4229071 PM 2 14, Consider PD&E for bypass Route
8. Longer-Term Recommendations

   A bridge replacement project on US 90 over Macavis Bayou programmed in the TIP will help alleviate congestion in the east/west direction through Milton. Longer term, the planned SR 87 by-pass will both divert freight traffic around Milton and serve the Whiting Field aviation commerce park. A PD&E study is in progress but funding for ROW and construction are not programmed.

9. Question and Answer Section at the end:

Q: Are there specific improvements programmed or identified as unfunded needs that would address the issues from 6, 7, or 8 above (Capacity, Safety, and Intersection Improvement)

A: The current SR 87 PD&E study will look at improving capacity through or around the City of Milton to include a connection between SR 87S and SR 87N (also known as eastern bypass) and the need for a southern bypass. In addition to relieving freight traffic in Milton, this may also help solve the issue of freight traffic through Bagdad, a small historic community whose vision is to become a walkable community. Freight traffic passes through Bagdad between SR 87N and I-10. We are hoping the PD&E study will show an eastern bypass will be the preferred route for freight traffic between SR 87N and I-10. This study will also address access to the new County air industrial park adjacent to Naval Air Station Whiting Field.

Q: What are the capacity issues that would affect trucking operations in your county? Is

congestion/delay a factor?

A: Another capacity issue is related to strategic connections. Four-lane capacity is needed from the Gulf Coast to I-65. With the military, industrial, commercial and residential growth east of Pensacola from Santa Rosa to Okaloosa County, four lanes along the SR 87 corridor from the Gulf Coast to I-65 would improve the STRAHNET, hurricane evacuation, hurricane recovery and economic development. This would take cooperation between Alabama and Florida, which has been occurring at the local level for 10 years. The effect of industrial growth in Mobile County should also be considered

Appendix E: Alternatives Evaluation

Alternatives Evaluation

The evaluation of the various design alternatives for the SR 87 Connector within the project limits involved essentially a multi-objective/multi-attribute decision making process. The establishment of the relative importance of each objective/criteria was critical in order to ultimately choose the most efficient or "best" roadway alternative. This process involved decisions which must make trade-offs between different and often conflicting objectives/criteria. The core decision making tool utilized during the evaluation was the Analytic Hierarchical Process (AHP). This process was developed by Thomas J. Saaty for decision analysis of complex subjective problems involving a large number of criteria. This appendix documents the application of the AHP computer decision making software used to determine the recommended roadway design alternative for the proposed project. Study participants started by addressing pertinent issues such as setting priorities, subsequently establishing criteria and criteria weights, and finally by evaluating the various alternatives for the proposed project improvements. **Figure B-1** illustrates the methodology utilized in the evaluation of the roadway project alternatives for the proposed project.

Evaluation Methodology

The Analytic Hierarchy Process (AHP) method is based on the breakdown of each problem into a system of stratified levels or hierarchies where each level consists of criteria or objectives to be compared. Each of the criteria or objectives in a level is further broken down in subsequent levels into sub-criteria or objectives that are easier to quantify. The relative importance or priority for all the criteria in a given level is then established through a sequence of pair-wise comparisons which will ultimately lead to the derivation of priorities (i.e., weights or importance) for each criterion as well as the determination of the recommended roadway alternative. Pair-wise comparisons have been technically proven to be more reliable in eliciting human judgment than directly assigning weights. Once the hierarchy was established and agreed upon, a questionnaire was developed based on pair-wise comparisons of the established

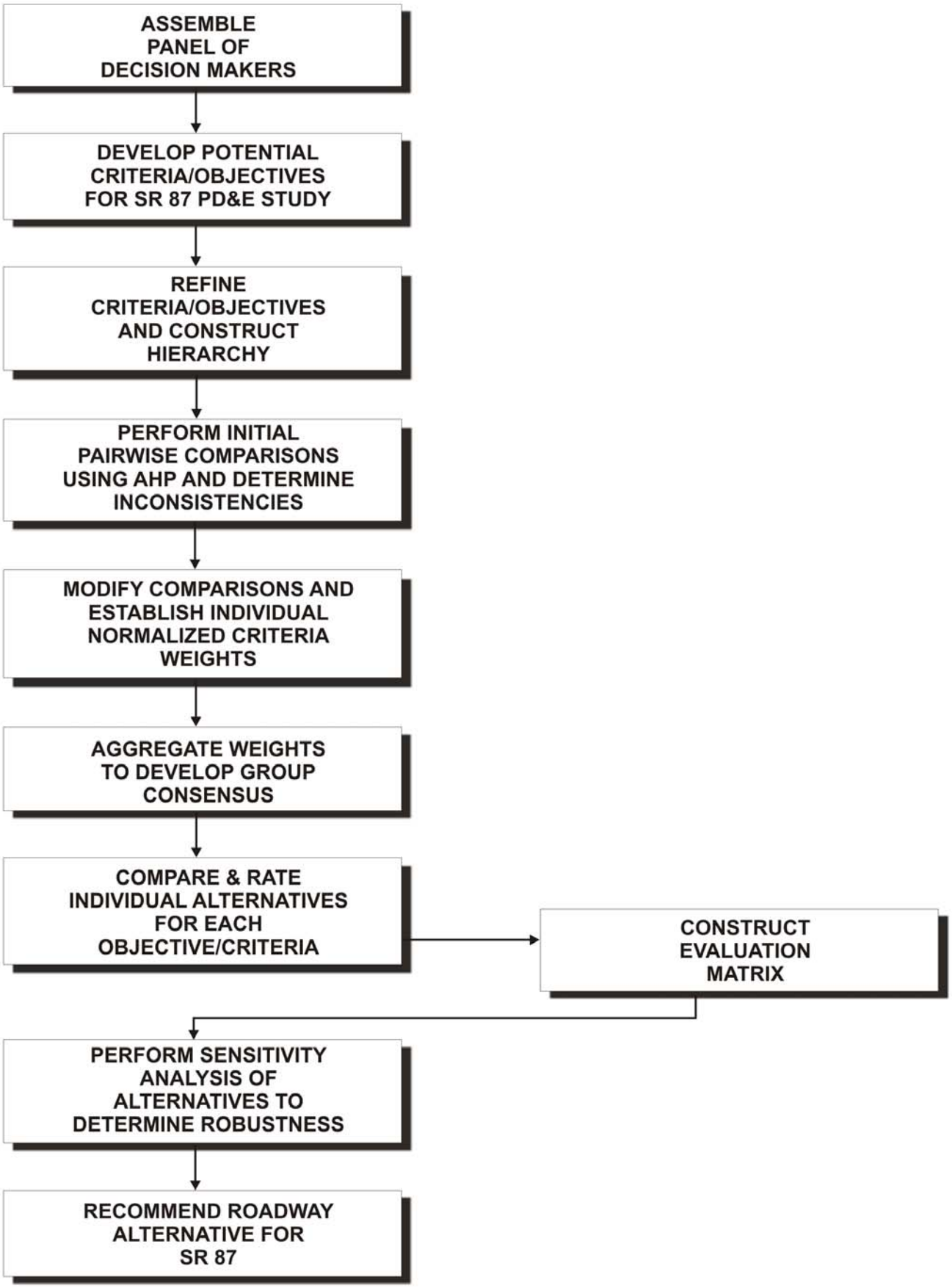

EVALUATION METHODOLOGY FLOWCHART

FIGURE NO.

E-1

criteria. It should be noted that even though project questionnaires are often utilized by participants to establish the importance, priority or weight of each criterion, in our case the panel participants agreed to adopt the weights previously established during the previous evaluation phase (see values at top of table 5-2 & figure 11). However, a questionnaire was developed to compare each of the two (2) roadway project alternatives based on each parameter comprising the criteria. After the questionnaires were completed, the data was input into the computer program.

Evaluation Results

The AHP computer application was performed with a group consensus results obtained by aggregating the responses of all participants and applying the group median method. The group median judgments and preferences were then incorporated into the AHP computer program. The AHP computer application results are included at the end of this appendix and **Table E-1** provides a brief explanation of the included outputs. A thorough sensitivity analysis of the results was conducted after finding the recommended roadway alternative as selected by the participants of the study through the execution of the program. The analysis included the investigation of sensitive criterion or criteria within the results. The AHP software also includes a sensitivity analysis feature. This feature investigates the effect of the ranking of the recommended roadway alternative if criteria take on other possible values. The sensitivity analysis identifies the relatively sensitive criteria (i.e., those that can not be changed much without changing the ranking of the top roadway alternative) to try to estimate these more closely, and then to select a solution which remains a good one over the ranges of likely values of the sensitive parameters. Usually there will be some criteria that can be assigned any reasonable value without affecting the ranking of the recommended alternative. However, there may also be criteria with likely values that would yield a new ranking of the recommended alternative.

Page No.	Table E-1 Contents
1	Weight assignment for all Primary & Secondary objectives
2	Final Computed results for both competing alternatives and pairwise comparison of the alternatives
3	Weight Assignment graph for Primary Objectives
4	Weight Assignment graph for Engineering Objectives
5 to 7	Computed alternative results with respect to secondary objectives of minimizing traffic service, safety and multimodal
8	Weight Assignment graph for Socio-Economic Objectives
9 to 13	Computed alternative results with respect to secondary objectives of minimizing hurricane evacuation deficiencies, controversial potential, historical impacts, section 4(f) impacts, and relocation potential
14	Weight Assignment graph for Environmental Objectives
13 to 18	Computed alternative results with respect to secondary objectives of minimizing wetland impacts, minimize impacts to threatened and endangered species, minimize noise and air impacts, and minimize contamination impacts
19	Weight Assignment graph for Cost Objectives
20 & 21	Computed alternative results with respect to secondary objectives of minimizing construction and right-of-way costs
21 & 22	Synthesis of computed alternative results

Model Name: AHP Alternatives

Treeview

- **Goal: Determine Preferred Corridor**
  - **Engineering (L: .310)**
    - **Traffic Service (L: .419)**
    - **Safety (L: .323)**
    - **Multimodal Features (L: .258)**
  - **Environmental (L: .250)**
    - **Wetlands Impacts (L: .360)**
    - **Threatened/Endangered Species (L: .160)**
    - **Noise & Air Impacts (L: .160)**
    - **Contamination (L: .320)**
  - **Socio-Economic (L: .290)**
    - **Hurricane Evacuation (L: .310)**
    - **Community and Cultural Resources (L: .207)**
    - **Historical (L: .138)**
    - **Section 4(f) (L: .138)**
    - **Relocation (L: .207)**
  - **Cost (L: .150)**
    - **R/W (L: .500)**
    - **Construction (L: .500)**

Alternatives

Alternative 1	**.459**
Alternative 2	**.541**

* *Ideal mode*

Enter user name

Priority Graphs

Priorities with respect to:

Goal: Determine Preferred Corridor

Engineering	**.310**	
Environmental	**.250**	
Socio-Economic	**.290**	
Cost	**.150**	

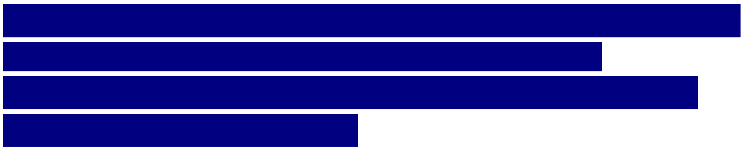

Inconsistency = 0.00

with 0 missing judgments.

Priorities with respect to:

Goal: Determine Preferred Corridor
>Engineering

Traffic Service	**.419**	
Safety	**.323**	
Multimodal Features	**.258**	

Inconsistency = 0.00

with 0 missing judgments.

Priorities with respect to:

Goal: Determine Preferred Corridor
>Engineering
>Traffic Service

Alternative 1	**.308**	
Alternative 2	**.692**	

Inconsistency = 0.00

with 0 missing judgments.

Priorities with respect to:

Goal: Determine Preferred Corridor
>Engineering
>Safety

Alternative 1	**.500**
Alternative 2	**.500**

Inconsistency = 0.00

with 0 missing judgments.

Priorities with respect to:

Goal: Determine Preferred Corridor
>Engineering
>Multimodal Features

Alternative 1	**.500**
Alternative 2	**.500**

Inconsistency = 0.00
with 0 missing judgments.

Priorities with respect to:

Goal: Determine Preferred Corridor
>Environmental

Wetlands Impacts	**.360**
Threatened/Endangered Species	**.160**
Noise & Air Impacts	**.160**
Contamination	**.320**

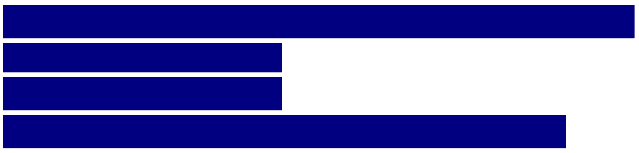

Inconsistency = 0.00

with 0 missing judgments.

Priorities with respect to:

Goal: Determine Preferred Corridor
>Environmental
>Wetlands Impacts

Alternative 1	**.308**	
Alternative 2	**.692**	

Inconsistency = 0.00
with 0 missing judgments.

Priorities with respect to:

Goal: Determine Preferred Corridor
>Environmental
>Threatened/Endangered S...

Alternative 1	**.500**
Alternative 2	**.500**

Inconsistency = 0.00

with 0 missing judgments.

Priorities with respect to:

Goal: Determine Preferred Corridor
>Environmental
>Noise & Air Impacts

Alternative 1	**.500**	
Alternative 2	**.500**	

Inconsistency = 0.00

with 0 missing judgments.

Priorities with respect to:

Goal: Determine Preferred Corridor
>Environmental
>Contamination

Alternative 1	**.308**	
Alternative 2	**.692**	

Inconsistency = 0.00

with 0 missing judgments.

Priorities with respect to:

Goal: Determine Preferred Corridor
>Socio-Economic

Hurricane Evacuation	**.310**	
Community and Cultural Resources	**.207**	
Historical	**.138**	
Section 4(f)	**.138**	
Relocation	**.207**	

Inconsistency = 0.00

with 0 missing judgments.

Priorities with respect to:

Goal: Determine Preferred Corridor
>Socio-Economic
>Hurricane Evacuation

Alternative 1	**.308**	
Alternative 2	**.692**	

Inconsistency = 0.00

with 0 missing judgments.

Priorities with respect to:

Goal: Determine Preferred Corridor
>Socio-Economic
>Community and Cultural R...

Alternative 1	**.692**	
Alternative 2	**.308**	

Inconsistency = 0.00

with 0 missing judgments.

Priorities with respect to:

Goal: Determine Preferred Corridor
>Socio-Economic
>Historical

Alternative 1	**.500**
Alternative 2	**.500**

Inconsistency = 0.00

with 0 missing judgments.

Priorities with respect to:

Goal: Determine Preferred Corridor
>Socio-Economic
>Section 4(f)

Alternative 1	**.500**
Alternative 2	**.500**

Inconsistency = 0.00

with 0 missing judgments.

Priorities with respect to:

Goal: Determine Preferred Corridor
>Socio-Economic
>Relocation

Alternative 1	**.308**	
Alternative 2	**.692**	

Inconsistency = 0.00

with 0 missing judgments.

Priorities with respect to:

Goal: Determine Preferred Corridor
>Cost

R/W	**.500**	
Construction	**.500**	

Inconsistency = 0.00

with 0 missing judgments.

Priorities with respect to:

Goal: Determine Preferred Corridor
>Cost
>R/W

Alternative 1	**.692**	
Alternative 2	**.308**	

Inconsistency = 0.00
with 0 missing judgments.

Priorities with respect to:

Goal: Determine Preferred Corridor
>Cost
>Construction

Alternative 1	**.692**	
Alternative 2	**.308**	

Inconsistency = 0.00
with 0 missing judgments.

Synthesis: Details

Level 1	Level 2	Alts	Prty
Engineering (L: .310)	Traffic Se...	Alternativ...	.03536
		Alternativ...	.07956
	Safety (L:...	Alternativ...	.06120
		Alternativ...	.06120
	Multimod...	Alternativ...	.04896
		Alternativ...	.04896
Environmental (L: .250)	Wetlands ...	Alternativ...	.02449
		Alternativ...	.05511
	Threaten...	Alternativ...	.02449
		Alternativ...	.02449
	Noise & A...	Alternativ...	.02449
		Alternativ...	.02449
	Contamin...	Alternativ...	.02177
		Alternativ...	.04898
Socio-Economic (L: .290)	Hurricane...	Alternativ...	.02450
		Alternativ...	.05513
	Communi...	Alternativ...	.03675
		Alternativ...	.01633
	Historical ...	Alternativ...	.02450
		Alternativ...	.02450
	Section 4...	Alternativ...	.02450
		Alternativ...	.02450
	Relocatio...	Alternativ...	.01633
		Alternativ...	.03675
Cost (L: .150)	R/W (L:	Alternativ...	.04592
		Alternativ...	.02041
	Construct...	Alternativ...	.04592
		Alternativ...	.02041

Appendix F: Typical Section Package

STATE OF FLORIDA

DEPARTMENT OF TRANSPORTATION

TYPICAL SECTION PACKAGE

FINANCIAL PROJECT ID
416748-3-22-01 AND 416748-3-22-02

SR 87 CONNECTOR FROM
SR 87S @ SR 10 (US 90) TO SR 87N

SANTA ROSA COUNTY

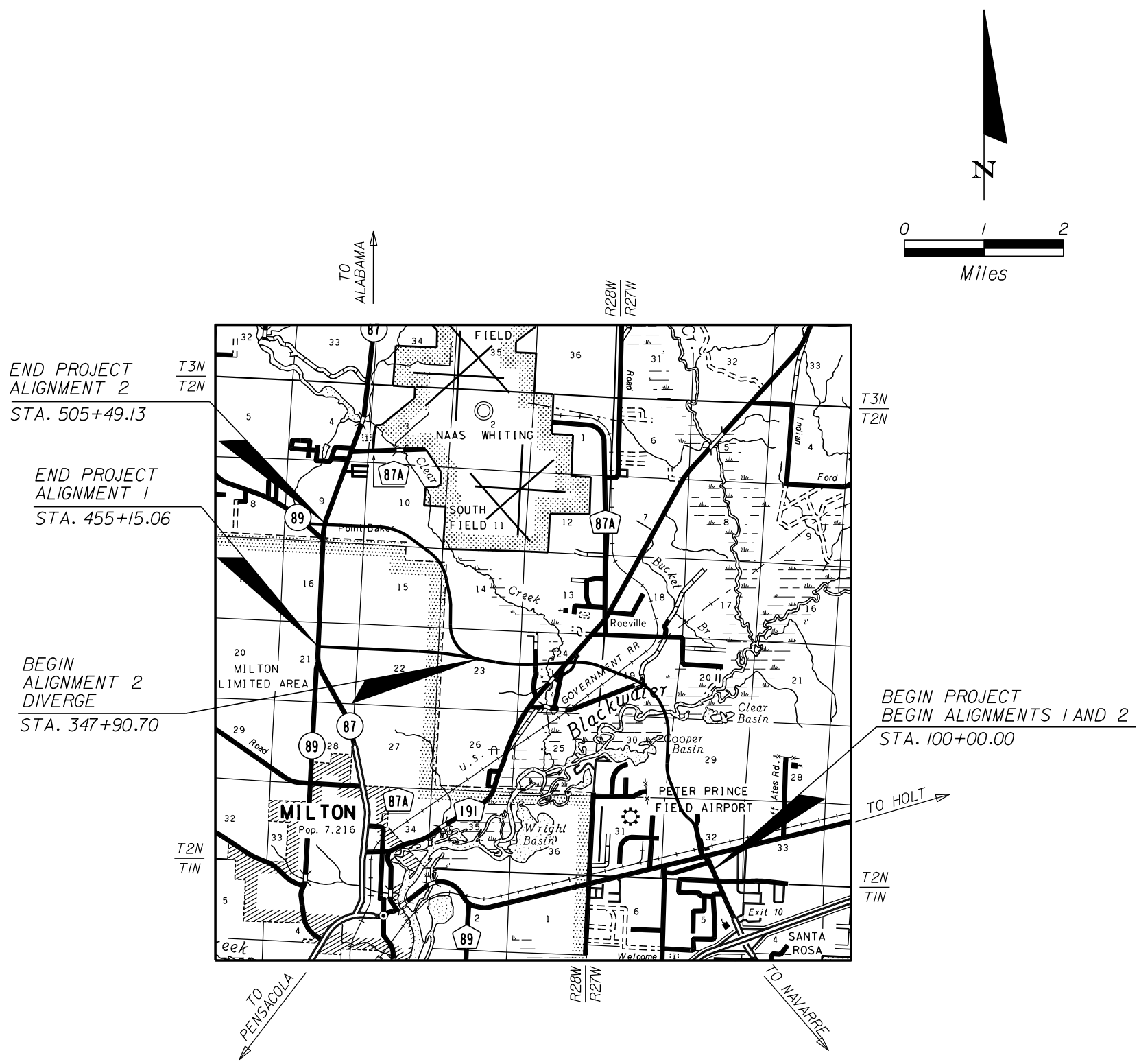

PREPARED BY

METRIC ENGINEERING, INC.
ENGINEERS • PLANNERS

2616 JENKS AVE
PANAMA CITY, FLORIDA 32405
TEL. (850) 872-8044
FAX. (850) 872-8704
FLORIDA CERT. NO. EB- 0002294

PROJECT IDENTIFICATION

FINANCIAL PROJECT ID 416748-3-22-01 AND 416748-3-22-02 COUNTY (SECTION) SANTA ROSA (58040)

PROJECT DESCRIPTION ALIGN. 1 AND 2; STA. 100+00 - 253+60 (FROM S. OF US 90 TO THE BLACKWATER RIVER BRIDGE)
ALIGN. 1: STA. 435+29 - 455+15 (AT CONNECTION TO SR 87N)
ALIGN. 2: STA. 464+44 - 505+49 (AT CONNECTION TO SR 87N)

PROJECT CONTROLS

FUNCTIONAL CLASSIFICATION

( ) RURAL
(X) URBAN

( ) FREEWAY/EXPWY. ( ) MAJOR COLL.
(X) PRINCIPAL ART. ( ) MINOR COLL.
( ) MINOR ART. ( ) LOCAL

HIGHWAY SYSTEM

Yes	No	
( )	(X)	NATIONAL HIGHWAY SYSTEM
( )	(X)	FLORIDA INTRASTATE HIGHWAY SYSTEM
( )	(X)	STRATEGIC INTERMODAL SYSTEM
(X)	( )	STATE HIGHWAY SYSTEM
( )	(X)	OFF STATE HIGHWAY SYSTEM

ACCESS CLASSIFICATION

( ) 1 - FREEWAY
( ) 2 - RESTRICTIVE w/Service Roads
(X) 3 - RESTRICTIVE w/660 ft. Connecting Spacing
( ) 4 - NON-RESTRICTIVE w/2640 ft. Signal Spacing
( ) 5 - RESTRICTIVE w/440 ft. Connection Spacing
( ) 6 - NON- RESTRICTIVE w/1320 ft. Signal Spacing
( ) 7 - BOTH MEDIAN TYPES

TRAFFIC

	YEAR	AADT
CURRENT	2009	0
OPENING	2015	10,731
DESIGN	2035	19,746

DESIGN SPEED 45
POSTED SPEED 45

DISTRIBUTION
K 9.0%
D 58.7%
T_{24} 5%

CRITERIA

(X) NEW CONSTRUCTION / RECONSTRUCTION
( ) RRR INTERSTATE / FREEWAY
( ) RRR NON-INTERSTATE / FREEWAY
( ) TDLC / NEW CONSTRUCTION / RECONSTRUCTION
( ) TDLC / RRR
( ) MANUAL OF UNIFORM MINIMUM STANDARDS
(FLORIDA GREENBOOK)(OFF-STATE HIGHWAY ONLY)

DESIGN SPEED APPROVALS

JOHN S. GOLDEN, P.E.
DISTRICT DESIGN ENGINEER — DATE

JARED PERDUE, P.E.
DISTRICT TRAFFIC OPERATIONS ENGINEER — DATE

LIST ANY POTENTIAL EXCEPTIONS AND VARIATIONS RELATED TO TYPICAL SECTION ELEMENTS:

ACCESS MANAGEMENT: CONNECTION SPACING - DRIVEWAY TURNOUTS JUST NORTH OF US 90 - ALIGNMENTS 1 AND 2
CONNECTION SPACING - DRIVEWAY TURNOUTS JUST EAST OF SR 87N - ALIGNMENT 1
MEDIAN OPENING SPACING - BOBBY BROWN ROAD AT BEGINNING OF ALIGNMENTS 1 AND 2
MEDIAN OPENING SPACING - SEASON DRIVE AT THE END OF ALIGNMENT 2

LIST MAJOR STRUCTURES LOCATION/DESCRIPTION - REQUIRING INDEPENDENT STRUCTURE DESIGN:

BRIDGE OVER BLACKWATER RIVER, BLACKWATER HERITAGE TRAIL AND WETLANDS

LIST MAJOR UTILITIES WITHIN PROJECT CORRIDOR:

AT&T, AT&T DISTRIBUTION, CITY OF MILTON, CSX RAILROAD, EAST MILTON WATER SYSTEM, GULF POWER, MCI, MEDIACOM, OKALOOSA GAS, POINT BAKER WATER SYSTEM, QWEST, SOUTHERN LIGHT, SPRINT/NEXTEL

LIST OTHER INFORMATION PERTINENT TO DESIGN OF PROJECT:

SR 87 HAS BEEN DESIGNATED AS A "HURRICANE EVACUATION ROUTE"

PROJECT IDENTIFICATION

FINANCIAL PROJECT ID 416748-3-22-01 AND 416748-3-22-02 COUNTY (SECTION) SANTA ROSA (58040)

PROJECT DESCRIPTION ALIGN. 1: STA. 253+60 - 435+29 AND ALIGN. 2: STA. 253+60 - 464+44 (FROM N. OF THE BLACKWATER RIVER BRIDGE TO E. OF SR 87N CONNECTION)

PROJECT CONTROLS

FUNCTIONAL CLASSIFICATION

(X) RURAL
( ) URBAN

( ) FREEWAY/EXPWY. ( ) MAJOR COLL.
(X) PRINCIPAL ART. ( ) MINOR COLL.
( ) MINOR ART. ( ) LOCAL

HIGHWAY SYSTEM

Yes	No	
( )	(X)	NATIONAL HIGHWAY SYSTEM
( )	(X)	FLORIDA INTRASTATE HIGHWAY SYSTEM
( )	(X)	STRATEGIC INTERMODAL SYSTEM
(X)	( )	STATE HIGHWAY SYSTEM
( )	(X)	OFF STATE HIGHWAY SYSTEM

ACCESS CLASSIFICATION

( ) 1 - FREEWAY
( ) 2 - RESTRICTIVE w/Service Roads
(X) 3 - RESTRICTIVE w/660 ft. Connecting Spacing
( ) 4 - NON-RESTRICTIVE w/2640 ft. Signal Spacing
( ) 5 - RESTRICTIVE w/440 ft. Connection Spacing
( ) 6 - NON- RESTRICTIVE w/1320 ft. Signal Spacing
( ) 7 - BOTH MEDIAN TYPES

TRAFFIC

	YEAR	AADT
CURRENT	2009	0
OPENING	2015	10,731
DESIGN	2035	19,746

		DISTRIBUTION	
DESIGN SPEED	65	K	9.0%
POSTED SPEED	60	D	58.7%
		T_{24}	5%

CRITERIA

(X) NEW CONSTRUCTION / RECONSTRUCTION
( ) RRR INTERSTATE / FREEWAY
( ) RRR NON-INTERSTATE / FREEWAY
( ) TDLC / NEW CONSTRUCTION / RECONSTRUCTION
( ) TDLC / RRR
( ) MANUAL OF UNIFORM MINIMUM STANDARDS (FLORIDA GREENBOOK)(OFF-STATE HIGHWAY ONLY)

DESIGN SPEED APPROVALS

JOHN S. GOLDEN, P.E.
DISTRICT DESIGN ENGINEER — DATE

JARED PERDUE, P.E.
DISTRICT TRAFFIC OPERATIONS ENGINEER — DATE

LIST ANY POTENTIAL EXCEPTIONS AND VARIATIONS RELATED TO TYPICAL SECTION ELEMENTS:

NONE

LIST MAJOR STRUCTURES LOCATION/DESCRIPTION - REQUIRING INDEPENDENT STRUCTURE DESIGN:

BRIDGE OVER CLEAR CREEK

LIST MAJOR UTILITIES WITHIN PROJECT CORRIDOR:

AT&T, AT&T DISTRIBUTION, CITY OF MILTON, CSX RAILROAD, EAST MILTON WATER SYSTEM, GULF POWER, MCI, MEDIACOM, OKALOOSA GAS, POINT BAKER WATER SYSTEM, QWEST, SOUTHERN LIGHT, SPRINT/NEXTEL

LIST OTHER INFORMATION PERTINENT TO DESIGN OF PROJECT:

SR 87 HAS BEEN DESIGNATED AS A "HURRICANE EVACUATION ROUTE"

PROJECT IDENTIFICATION

FINANCIAL PROJECT ID	416748-3-22-01 AND 416748-3-22-02	FEDERAL AID PROJECT NO.	SFTI 296 R AND SI29 348 R	COUNTY NAME	SANTA ROSA
SECTION NO.	58040	ROAD DESIGNATION	SR 87 CONNECTOR	LIMITS/MILEPOST	ALIGNMENT 1 - STA 100+00 - STA 455+15 ALIGNMENT 2 - STA 100+00 - STA 505+49
PROJECT DESCRIPTION	SR 87 CONNECTOR FROM SR 10 (US 90) TO SR 87 NORTH				

PROPOSED INTERIM URBAN ROADWAY TYPICAL SECTION

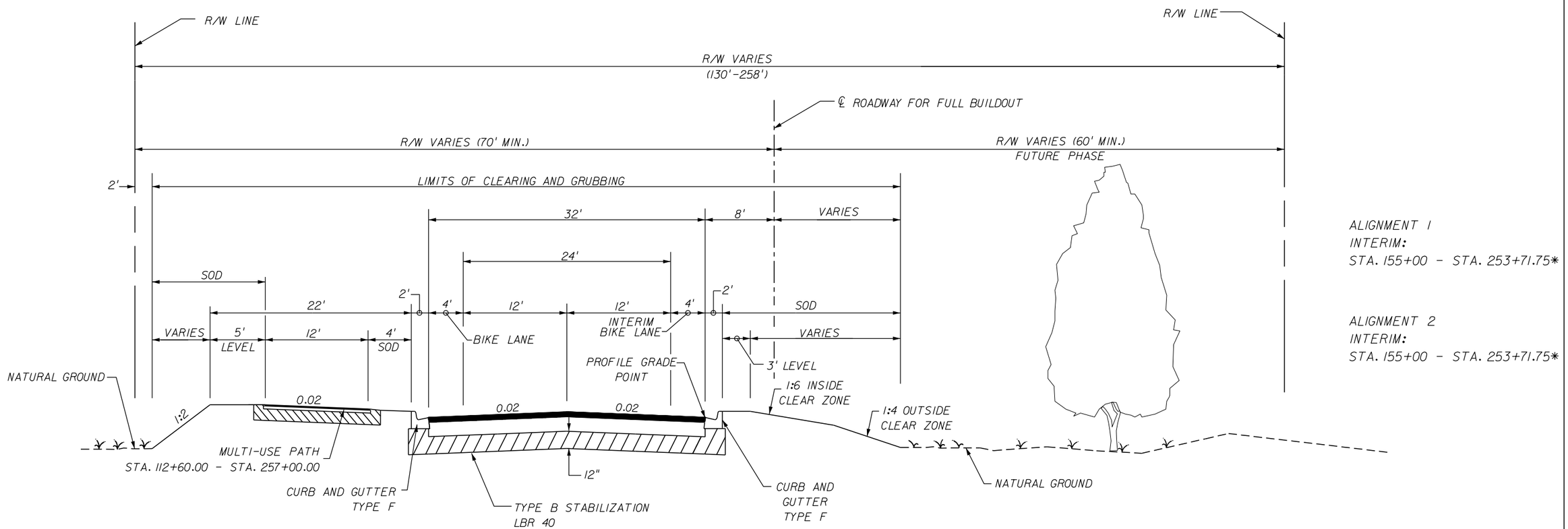

DESIGN SPEED = 45 MPH
CLEAR ZONE = 24'

*INCLUDES BLACKWATER RIVER BRIDGE

APPROVED BY JESSICA BLOOMFIELD, P.E.	FDOT CONCURRENCE	FHWA CONCURRENCE
Engineer Of Record — DATE	JOHN S. GOLDEN, P.E. FDOT District Design Engineer — DATE	FHWA Transportation Engineer — DATE

PROJECT IDENTIFICATION

FINANCIAL PROJECT ID	416748-3-22-01 AND 416748-3-22-02	FEDERAL AID PROJECT NO.	SFTI 296 R AND SI29 348 R	COUNTY NAME	SANTA ROSA
SECTION NO.	58040	ROAD DESIGNATION	SR 87 CONNECTOR	LIMITS/MILEPOST	ALIGNMENT 1 - STA 100+00 - STA 455+15 ALIGNMENT 2 - STA 100+00 - STA 505+49
PROJECT DESCRIPTION	SR 87 CONNECTOR FROM SR 10 (US 90) TO SR 87 NORTH				

PROPOSED INTERIM RURAL ROADWAY TYPICAL SECTION

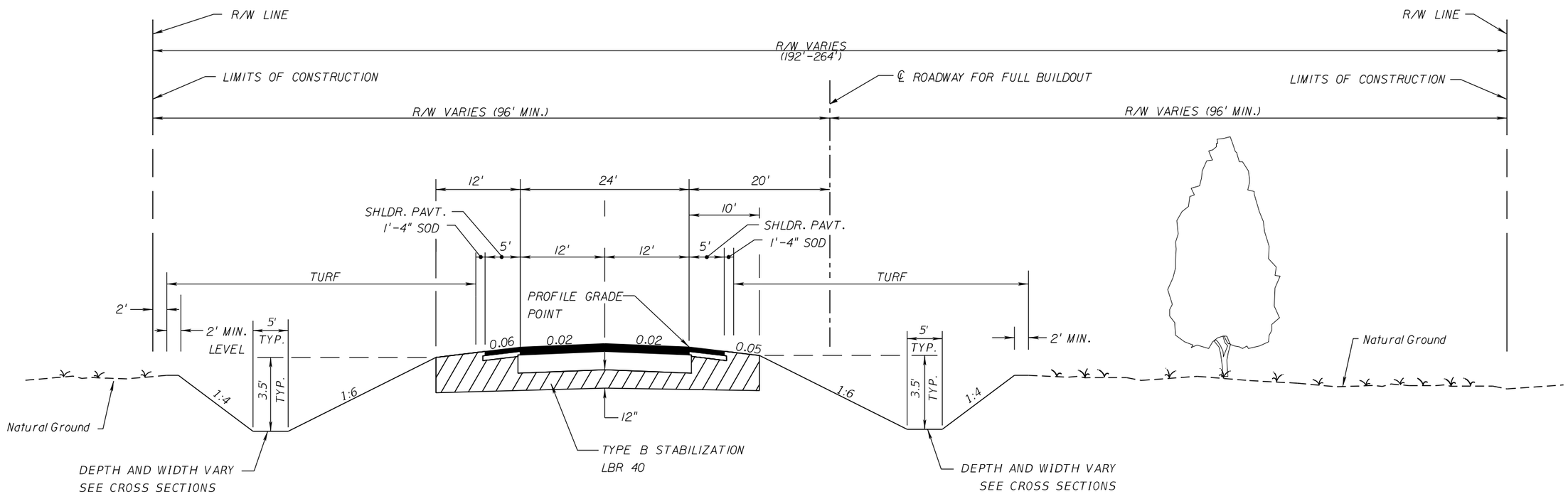

DESIGN SPEED = 65 MPH
CLEAR ZONE = 36'

ALIGNMENT 1	ALIGNMENT 2
BUILDOUT:	BUILDOUT:
STA. 253+71.75 - STA. 441+89*	STA. 253+71.75 - STA. 480+00*

*INCLUDES CLEAR CREEK BRIDGE

APPROVED BY JESSICA BLOOMFIELD, P.E.	FDOT CONCURRENCE	FHWA CONCURRENCE
Engineer Of Record — DATE	JOHN S. GOLDEN, P.E. FDOT District Design Engineer — DATE	FHWA Transportation Engineer — DATE

PROJECT IDENTIFICATION

FINANCIAL PROJECT ID	416748-3-22-01 AND 416748-3-22-02	FEDERAL AID PROJECT NO.	SFTI 296 R AND SI29 348 R	COUNTY NAME	SANTA ROSA
SECTION NO.	58040	ROAD DESIGNATION	SR 87 CONNECTOR	LIMITS/MILEPOST	ALIGNMENT 1 - STA 100+00 - STA 455+15 ALIGNMENT 2 - STA 100+00 - STA 505+49
PROJECT DESCRIPTION	SR 87 CONNECTOR FROM SR 10 (US 90) TO SR 87 NORTH				

PROPOSED URBAN ROADWAY TYPICAL SECTION

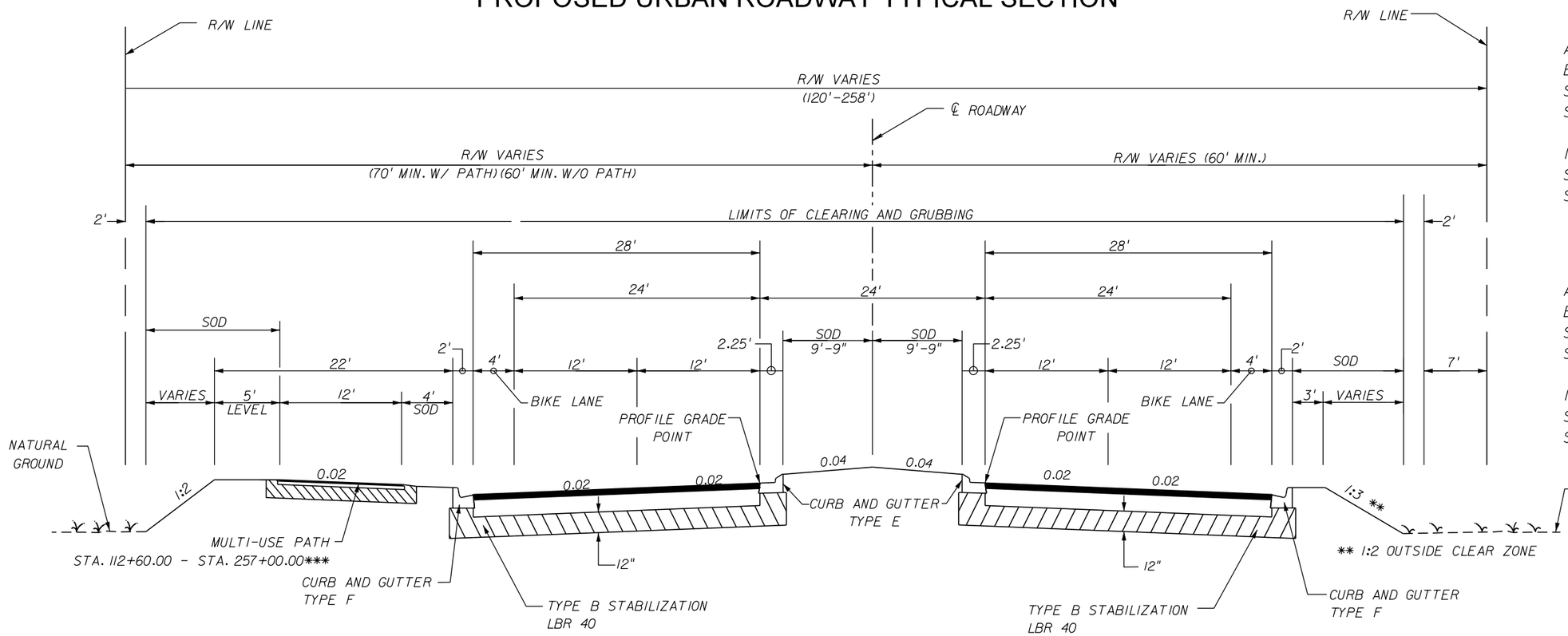

ALIGNMENT 1
BUILDOUT:
STA. 100+00 - STA. 253+71.75*
STA. 441+89 - STA. 455+15

INTERIM:
STA. 100+00 - STA. 155+00
STA. 441+89 - STA. 455+15

ALIGNMENT 2
BUILDOUT:
STA. 100+00 - STA. 253+71.75*
STA. 480+00 - STA. 505+64

INTERIM:
STA. 100+00 - STA. 155+00
STA. 480+00 - STA. 505+64

***FOR AREAS WITHOUT THE MULTI-USE PATH, THE LEFT SIDE WILL MIRROR THE RIGHT SIDE

DESIGN SPEED = 45 MPH
CLEAR ZONE = 24'

*INCLUDES BLACKWATER RIVER BRIDGE

APPROVED BY JESSICA BLOOMFIELD, P.E.	FDOT CONCURRENCE	FHWA CONCURRENCE
Engineer Of Record — DATE	JOHN S. GOLDEN, P.E. FDOT District Design Engineer — DATE	FHWA Transportation Engineer — DATE

PROJECT IDENTIFICATION

FINANCIAL PROJECT ID	416748-3-22-01 AND 416748-3-22-02	FEDERAL AID PROJECT NO.	SFTI 296 R AND SI29 348 R	COUNTY NAME	SANTA ROSA
SECTION NO.	58040	ROAD DESIGNATION	SR 87 CONNECTOR	LIMITS/MILEPOST	ALIGNMENT 1 - STA 100+00 - STA 455+15 ALIGNMENT 2 - STA 100+00 - STA 505+49
PROJECT DESCRIPTION	SR 87 CONNECTOR FROM SR 10 (US 90) TO SR 87 NORTH				

PROPOSED RURAL ROADWAY TYPICAL SECTION

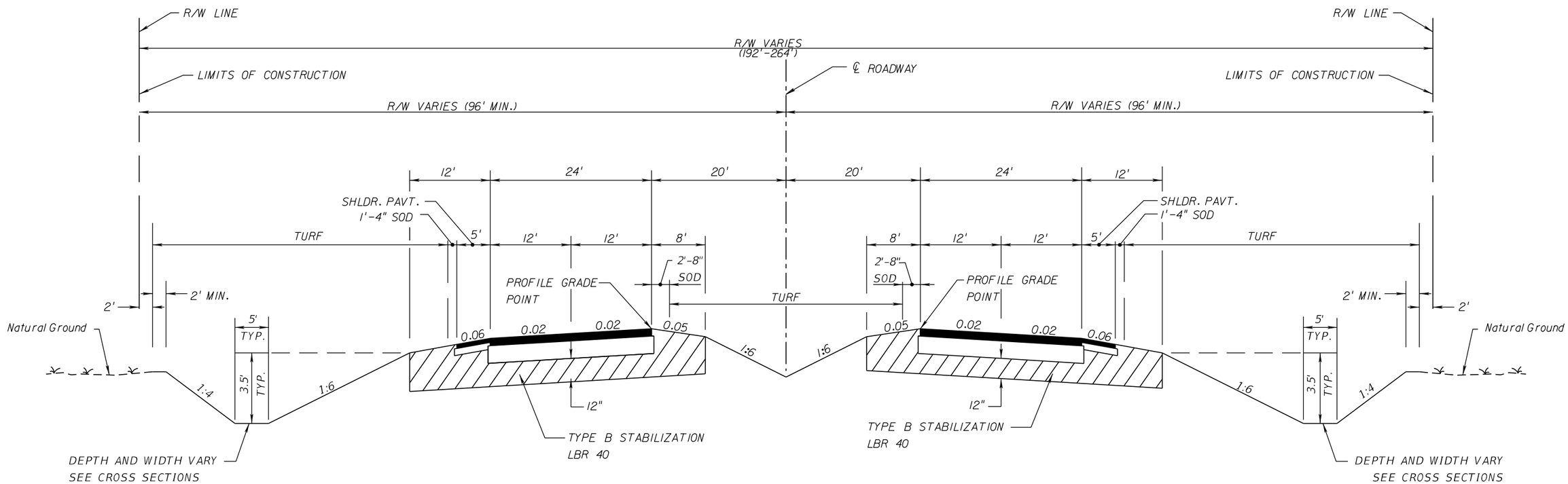

ALIGNMENT 1
BUILDOUT:
STA. 253+71.75 - STA. 441+89*

ALIGNMENT 2
BUILDOUT:
STA. 253+71.75 - STA. 480+00*

*INCLUDES CLEAR CREEK BRIDGE

DESIGN SPEED = 65 MPH
CLEAR ZONE = 36'

APPROVED BY JESSICA BLOOMFIELD, P.E.	FDOT CONCURRENCE	FHWA CONCURRENCE
Engineer Of Record — DATE	JOHN S. GOLDEN, P.E. FDOT District Design Engineer — DATE	FHWA Transportation Engineer — DATE

PROJECT IDENTIFICATION

FINANCIAL PROJECT ID	416748-3-22-01 AND 416748-3-22-02	FEDERAL AID PROJECT NO.	SFTI 296 R AND SI29 348 R	COUNTY NAME	SANTA ROSA
SECTION NO.	58040	ROAD DESIGNATION	SR 87 CONNECTOR	LIMITS/MILEPOST	ALIGNMENT 1 - STA 100+00 - STA 455+15 ALIGNMENT 2 - STA 100+00 - STA 505+49
PROJECT DESCRIPTION	SR 87 CONNECTOR FROM SR 10 (US 90) TO SR 87 NORTH				

PROPOSED BRIDGE TYPICAL SECTION - BLACKWATER RIVER BRIDGE - INTERIM AND BUILDOUT

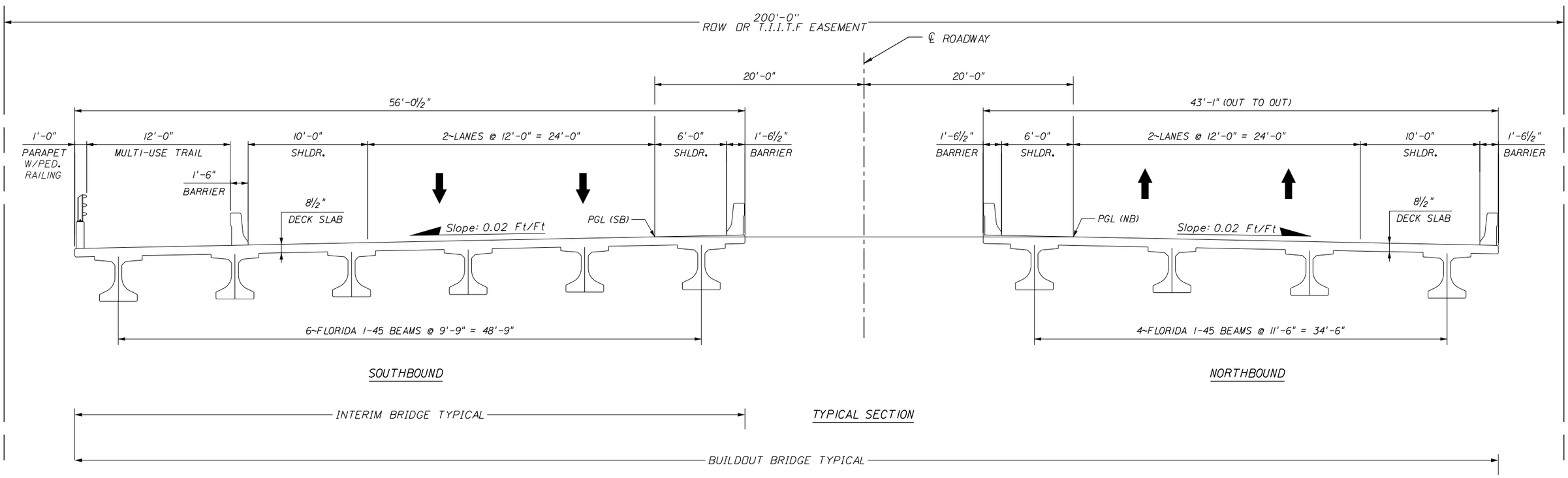

ALIGNMENTS 1 AND 2
BUILDOUT AND INTERIM:
STA. 198+00 - STA. 253+71.75 (BLACKWATER RIVER BRIDGE)

APPROVED BY JESSICA BLOOMFIELD, P.E.	FDOT CONCURRENCE	FHWA CONCURRENCE
Engineer Of Record — DATE	JOHN S. GOLDEN, P.E. FDOT District Design Engineer — DATE	FHWA Transportation Engineer — DATE

PROJECT IDENTIFICATION

FINANCIAL PROJECT ID	416748-3-22-01 AND 416748-3-22-02	FEDERAL AID PROJECT NO.	SFTI 296 R AND SI29 348 R	COUNTY NAME	SANTA ROSA
SECTION NO.	58040	ROAD DESIGNATION	SR 87 CONNECTOR	LIMITS/MILEPOST	ALIGNMENT 1 - STA 100+00 - STA 455+15 ALIGNMENT 2 - STA 100+00 - STA 505+49
PROJECT DESCRIPTION	SR 87 CONNECTOR FROM SR 10 (US 90) TO SR 87 NORTH				

PROPOSED BRIDGE TYPICAL SECTION - CLEAR CREEK BRIDGE - INTERIM AND BUILDOUT

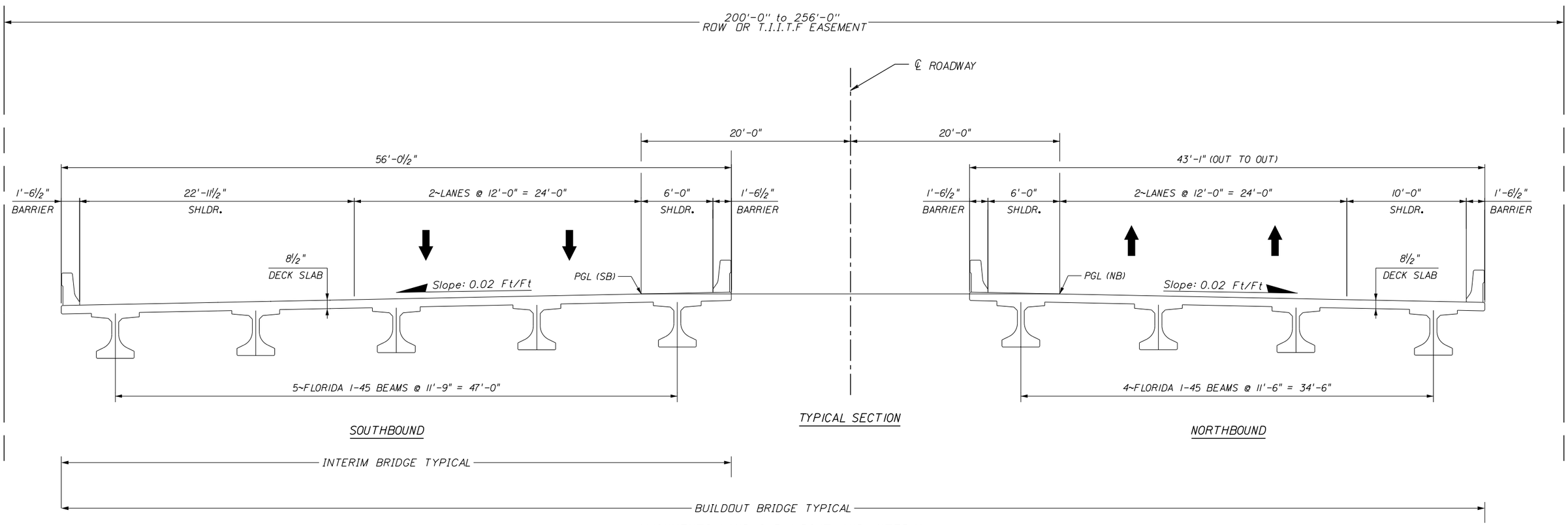

ALIGNMENTS 1 AND 2 BUILDOUT AND INTERIM:
STA. 300+25 - STA. 302+05 (CLEAR CREEK BRIDGE)

APPROVED BY JESSICA BLOOMFIELD, P.E.	FDOT CONCURRENCE	FHWA CONCURRENCE
Engineer Of Record — DATE	JOHN S. GOLDEN, P.E. FDOT District Design Engineer — DATE	FHWA Transportation Engineer — DATE

Appendix G: Coordination Letters

The FHWA finds the attached Cultural Resources Assessment Report complete and sufficient and _X_ approves / ___ does not approve, the above recommendations and findings.

The FHWA requests the SHPO's opinion on the sufficiency of the attached report and the SHPO's opinion on the recommendations and findings contained in this cover letter and in the comment block below.

FHWA Comments:

for /s/ Joseph Sullivan

Martin C. Knopp, P.E.
Division Administrator
Florida Division
Federal Highway Administration

1-31-2012
Date

The Florida State Historic Preservation Officer finds the attached Cultural Resources Assessment Report complete and sufficient and concurs with the recommendations and findings provided in this cover letter for SHPO/DHR Project File Number _____.

_____

Robert F. Bendus
State Historic Preservation Officer
For Review and Compliance
Florida Division of Historical Resources

_____
Date

U.S. Department of Homeland Security
United States Coast Guard

Commander
Eighth Coast Guard District
Hale Boggs Federal Building

500 Poydras Street, Room 1313
New Orleans, LA 70130-3310
Staff Symbol: (dpb)
Phone: (504) 671-2128
Fax: (504) 671-2133
D8DPBALL@uscg.mil

16591C
March 9, 2012

RECEIVED
MAR 13 2012
ENVIRONMENTAL MANAGEMENT OFFICE

Ms. Joy Giddens
Environmental Permits Director
Florida Department of Transportation
P.O. Box 607
Chipley, Florida 32428

Dear Ms. Giddens:

We have reviewed your information package, pertaining to Florida Department of Transportation's proposed project crossing the Blackwater River at Milton, in Santa Rosa County, Florida. We understand that this bridge project may be federally funded.

As part of our project review, we received a Bridge project Questionnaire from the Finley Engineering Group, Inc., dated December 20, 2011 along with a site map and pictures of the proposed bridge site. Based on our observations and the information that was provided, as well as the fact that Federal funds may be utilized for this project, it appears that the waterway, at the site of the bridge, would meet the criteria for the Surface Transportation Act of 1978 (STAA). In such cases, FHWA has the responsibility for the STAA under 23 U.S.C. 144(h) and would make the determination as to whether or not a Coast Guard Bridge Permit would be required. Based on 23 CFR Part 650.805, a Coast Guard Bridge permit would not be required if the FHWA determines that the proposed construction, reconstruction, rehabilitation or replacement of the federally funded or federally assisted funded bridge crosses waterways which (1) are not used or are not susceptible for use in their natural condition, or by reasonable improvement as a means to transport interstate or foreign commerce; and (2) which are not tidal, or if tidal, used only by recreational boating, fishing, and or other small vessels less than 21 feet in length.

Should FHWA determine that Blackwater River, at the bridge location, meets the criteria for the STAA, the Coast Guard would accept that determination and the project would be exempt from Coast Guard Bridge Administration purposes. Therefore, I suggest that you contact the FHWA Division Administrator in Tallahassee, Florida, regarding this proposed bridge project, and that you request that FHWA review the proposed project to determine if it meets the criteria for the STAA.

If you have any questions or if we can be of additional assistance please contact our office.

Sincerely,

DAVID M. FRANK
Chief of the Bridge Administration Branch
U. S. Coast Guard
By direction

Copy: Mr. Martin C. Knopp, P.E., Division Administrator, FHWA, Tallahassee, FL

From: John Flora
To: Gabriela Garcia
Subject: FW: SR 87 PD&E
Date: Thursday, October 11, 2012 1:58:45 PM

Acceptance of the CRAS by SHPO.

-----Original Message-----
From: Kelley, Peggy [mailto:Peggy.Kelley@dot.myflorida.com]
Sent: Monday, March 05, 2012 11:42 AM
To: Marshall, Amanda
Cc: Martin, Blair; Haddock, Laura; Bruner, Joseph; 'acinorth'; John Flora; Amy Wiwi
Subject: RE: SR 87 PD&E

Amanda,
Thanks for the update on the SR 87 Connector CRAS. I will forward your email onto John Flora so that he can document the concurrence and SHPO's request for our office to look at SR 1 again during the Design phase.

Peggy Kelley

Environment Management Office

Phone # (850) 415-9517

Fax# (850) 415-9486

peggy.kelley@dot.myflorida.com *Note my email address has changed.

Please note: Florida has a very broad public records law. Most written communications to or from state officials regarding state business are public records, available to the public and media upon request.

Your e-mail communications may be subject to public disclosure. (Florida Statutes, Chapter 119)

From: Marshall, Amanda
Sent: Friday, March 02, 2012 3:14 PM
To: Kelley, Peggy
Cc: Martin, Blair; Haddock, Laura; Bruner, Joseph; 'acinorth'
Subject: SR 87 PD&E

We received SHPO concurrence in the mail today for the SR 87 PD&E project.

Please note that one condition of concurrence is that we made a commitment that once the project reaches the design phase, we will explore options to minimize the potential effect the project will have on SR 1. At that time, we will look into options that will meet the need of the project while also preserving the resource (SR 1) as much as possible.

FIGURE NO.:	FIGURE TITLE:	PREPARED FOR:	
3	PROPOSED SITE PLAN	EAST MILTON WASTEWATER TREATMENT PLAN	BASKERVILLE-DONOVAN, INC. INNOVATIVE INFRASTRUCTURE SOLUTIONS ENGINEERING BUSINESS: EB-0000340

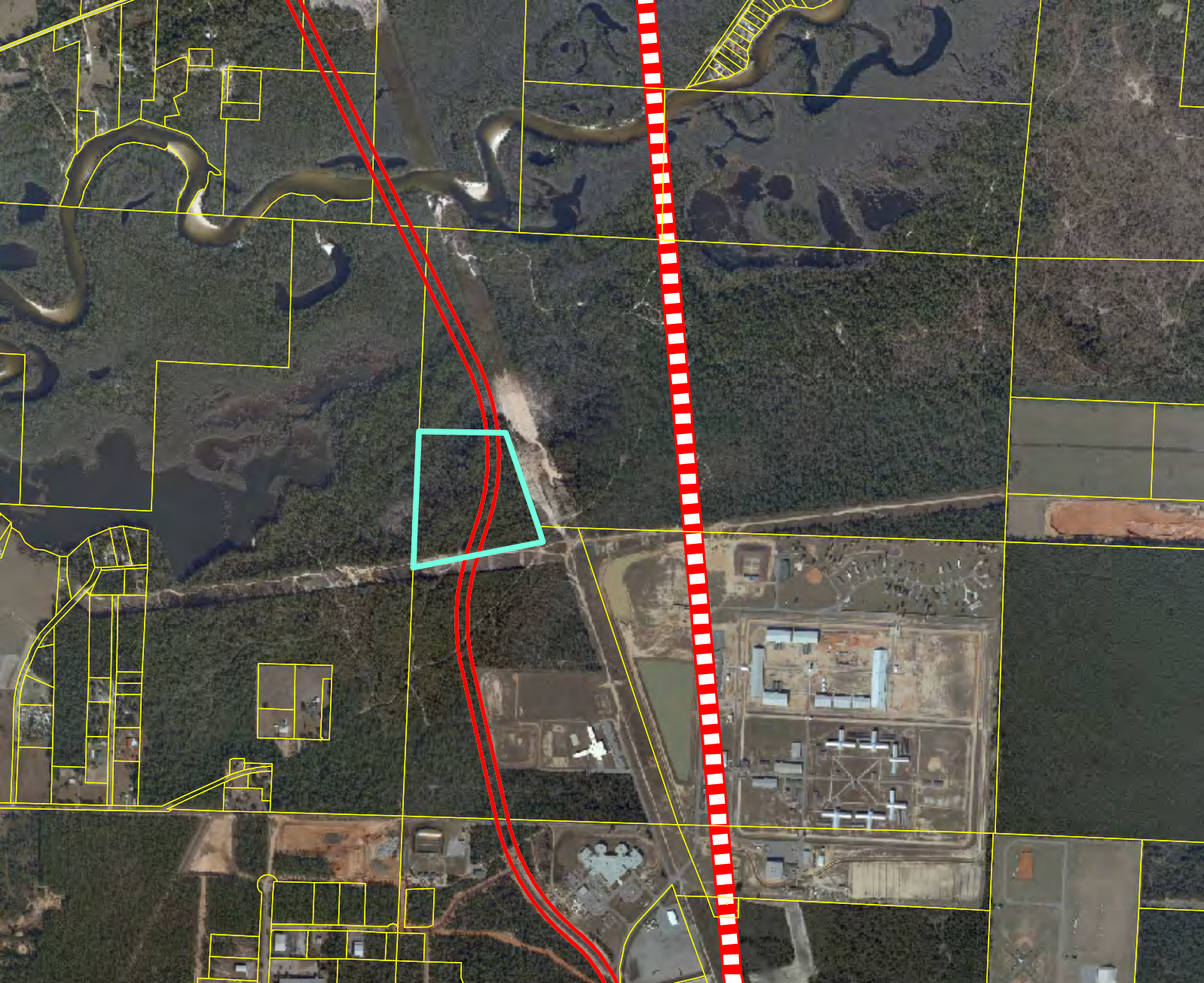

Appendix H: 2010 Long Range Estimate (LRE)

Date: 2/22/2013 3:17:03 PM

FDOT Long Range Estimating System - Production

R3: Project Details by Sequence Report

Project: 416748-3-22-02 **Letting Date:** 01/2099

Description: SR 87S / SR 87N CONNECTOR NEW ALIGNMENT

District: 03 **County:** 58 SANTA ROSA **Market Area:** 01 **Units:** English
Contract Class: 1 **Lump Sum Project:** N **Design/Build:** N **Project Length:** 7.910 MI

Project Manager: PEGGY KELLEY

Version 12 Project Grand Total **$116,780,691.72**
Description: Alignment 1 - Urban/Rural Typical Section with VE recommendations - 2/21/13

Sequence: 1 NDU - New Construction, Divided, Urban **Net Length:** 2.911 MI
15,372 LF

Description: Urban Sections - STA 100+00 - STA 253+71.75

EARTHWORK COMPONENT

User Input Data

Description	Value
Standard Clearing and Grubbing Limits L/R	71.00 / 59.00
Incidental Clearing and Grubbing Area	0.00
Alignment Number	1
Distance	2.910
Top of Structural Course For Begin Section	102.50
Top of Structural Course For End Section	102.50
Horizontal Elevation For Begin Section	100.00
Horizontal Elevation For End Section	100.00
Front Slope L/R	2 to 1 / 3 to 1
Median Shoulder Cross Slope L/R	4.00 % / 4.00 %
Outside Shoulder Cross Slope L/R	2.00 % / 2.00 %
Roadway Cross Slope L/R	2.00 % / 2.00 %

Pay Items

Pay item	Description	Quantity Unit	Unit Price	Extended Amount
110-1-1	CLEARING & GRUBBING	45.87 AC	$9,310.45	$427,070.34
120-6	EMBANKMENT	110,626.56 CY	$3.96	$438,081.18
	Earthwork Component Total			$865,151.52

ROADWAY COMPONENT

User Input Data

Description	Value
Number of Lanes	4
Roadway Pavement Width L/R	28.00 / 28.00
Structural Spread Rate	330
Friction Course Spread Rate	165

Pay Items

Pay item	Description	Quantity	Unit	Unit Price	Extended Amount
160-4	TYPE B STABILIZATION	113,275.97	SY	$2.67	$302,446.84
285-709	OPTIONAL BASE,BASE GROUP 09	95,649.19	SY	$22.63	$2,164,541.17
334-1-13	SUPERPAVE ASPHALTIC CONC, TRAFFIC C	15,782.12	TN	$86.58	$1,366,415.95
337-7-33	ASPH CONC FC,TRAFFIC C,FC-12.5,RUBBER	7,891.06	TN	$92.81	$732,369.28

X-Items

Pay item	Description	Quantity	Unit	Unit Price	Extended Amount
710-11-160	PAINTED PAVT MARK,STD,WHITE,MESSAGE **Comment:** 2 applications for bike lanes	62.00	EA	$46.80	$2,901.60

Turnouts/Crossovers Subcomponent

Description	Value
Asphalt Adjustment	0.00
Stabilization Code	N
Base Code	N
Friction Course Code	N

Pavement Marking Subcomponent

Description	Value
Include Thermo/Tape/Other	N
Pavement Type	Asphalt
Solid Stripe No. of Paint Applications	2
Solid Stripe No. of Stripes	4
Skip Stripe No. of Paint Applications	2
Skip Stripe No. of Stripes	2

Pay Items

Pay item	Description	Quantity	Unit	Unit Price	Extended Amount
706-3	RETRO-REFLECTIVE PAVEMENT MARKERS	1,179.00	EA	$3.25	$3,831.75
710-11-111	PAINTED PAVT MARK,STD,WHITE,SOLID,6"	23.29	NM	$838.29	$19,523.77
710-11-131	PAINTED PAVT MARK,STD,WHITE,SKIP, 6"	11.65	GM	$282.04	$3,285.77

Peripherals Subcomponent

Description	Value
Off Road Bike Path(s)	0
Off Road Bike Path Width L/R	12.00 / 0.00
Bike Path Structural Spread Rate	100
Noise Barrier Wall Length	0.00
Noise Barrier Wall Begin Height	0.00
Noise Barrier Wall End Height	0.00

Pay Items

Pay item	Description	Quantity	Unit	Unit Price	Extended Amount
160-4	TYPE B STABILIZATION	27,328.34	SY	$2.67	$72,966.67

285-701	OPTIONAL BASE,BASE GROUP 01	20,496.26 SY	$5.02	$102,891.23
334-1-11	SUPERPAVE ASPHALTIC CONC, TRAFFIC A	1,024.81 TN	$128.26	$131,442.13
	Roadway Component Total			$4,902,616.16

SHOULDER COMPONENT

User Input Data

Description	Value
Total Outside Shoulder Width L/R	12.25 / 7.25
Total Outside Shoulder Perf. Turf Width L/R	10.00 / 5.00
Sidewalk Width L/R	0.00 / 0.00

Pay Items

Pay item	Description	Quantity Unit	Unit Price	Extended Amount
520-1-10	CONCRETE CURB & GUTTER, TYPE F	15,372.19 LF	$11.57	$177,856.24
520-1-10	CONCRETE CURB & GUTTER, TYPE F	15,372.19 LF	$11.57	$177,856.24
570-1-1	PERFORMANCE TURF	25,620.32 SY	$0.54	$13,834.97

Erosion Control

Pay Items

Pay item	Description	Quantity Unit	Unit Price	Extended Amount
104-10-3	SEDIMENT BARRIER	30,744.38 LF	$1.61	$49,498.45
104-11	FLOATING TURBIDITY BARRIER	727.85 LF	$9.47	$6,892.74
104-12	STAKED TURBIDITY BARRIER-NYL REINF PVC	727.85 LF	$5.44	$3,959.50
104-15	SOIL TRACKING PREVENTION DEVICE	3.00 EA	$1,974.93	$5,924.79
104-18	INLET PROTECTION SYSTEM	149.00 EA	$109.72	$16,348.28
107-1	LITTER REMOVAL	74.10 AC	$26.79	$1,985.14
107-2	MOWING	74.10 AC	$59.57	$4,414.14
	Shoulder Component Total			$458,570.49

MEDIAN COMPONENT

User Input Data

Description	Value
Total Median Width	24.00
Performance Turf Width	19.50

Pay Items

Pay item	Description	Quantity Unit	Unit Price	Extended Amount
520-1-7	CONCRETE CURB & GUTTER, TYPE E	30,744.38 LF	$12.01	$369,240.00
570-1-1	PERFORMANCE TURF	33,306.42 SY	$0.54	$17,985.47
	Median Component Total			$387,225.47

DRAINAGE COMPONENT

Pay Items

Pay item	Description	Quantity	Unit	Unit Price	Extended Amount
400-2-2	CONC CLASS II, ENDWALLS	52.41	CY	$1,390.16	$72,858.29
425-1-351	INLETS, CURB, TYPE P-5, <10'	105.00	EA	$2,997.62	$314,750.10
425-1-451	INLETS, CURB, TYPE J-5, <10'	30.00	EA	$4,747.89	$142,436.70
425-1-521	INLETS, DT BOT, TYPE C, <10'	15.00	EA	$2,042.97	$30,644.55
425-2-41	MANHOLES, P-7, <10'	15.00	EA	$2,438.41	$36,576.15
430-175-124	PIPE CULV, OPT MATL, ROUND, 24"S/CD	7,704.00	LF	$47.31	$364,476.24
430-175-136	PIPE CULV, OPT MATL, ROUND, 36"S/CD	688.00	LF	$70.38	$48,421.44
430-175-148	PIPE CULV, OPT MATL, ROUND, 48"S/CD	14,560.00	LF	$99.78	$1,452,796.80
570-1-1	PERFORMANCE TURF	885.07	SY	$0.54	$477.94

Box Culvert 1

Description	Value
Size	7 x 4
Length	150.00
Multiplier	1

Pay Items

Pay item	Description	Quantity	Unit	Unit Price	Extended Amount
400-4-1	CONC CLASS IV, CULVERTS	112.50	CY	$594.74	$66,908.25
415-1-1	REINF STEEL- ROADWAY	13,794.00	LB	$0.67	$9,241.98

Box Culvert 2

Description	Value
Size	7 x 4
Length	150.00
Multiplier	1

Pay Items

Pay item	Description	Quantity	Unit	Unit Price	Extended Amount
400-4-1	CONC CLASS IV, CULVERTS	112.50	CY	$594.74	$66,908.25
415-1-1	REINF STEEL- ROADWAY	13,794.00	LB	$0.67	$9,241.98

Retention Basin 1

Description	Value
Size	2.5 AC
Multiplier	1
Depth	4.00
Description	

Pay Items

Pay item	Description	Quantity	Unit	Unit Price	Extended Amount
110-1-1	CLEARING & GRUBBING	2.50	AC	$9,310.45	$23,276.12

120-1	REGULAR EXCAVATION	16,133.33 CY	$7.07	$114,062.64
400-2-2	CONC CLASS II, ENDWALLS	18.00 CY	$1,390.16	$25,022.88
425-1-361	INLETS, CURB, TYPE P-6, <10'	1.00 EA	$3,479.15	$3,479.15
425-2-71	MANHOLES, J-7, <10'	1.00 EA	$3,912.12	$3,912.12
430-175-142	PIPE CULV, OPT MATL, ROUND, 42"S/CD	56.00 LF	$90.22	$5,052.32
430-175-160	PIPE CULV, OPT MATL, ROUND, 60"S/CD	200.00 LF	$175.80	$35,160.00
550-10-220	FENCING, TYPE B, 5.1-6.0', STANDARD	1,335.00 LF	$10.26	$13,697.10
550-60-234	FENCE GATE,TYP B,SLIDE/CANT,18.1-20'OPEN	1.00 EA	$1,671.36	$1,671.36
570-1-1	PERFORMANCE TURF	12,100.00 SY	$0.54	$6,534.00

Retention Basin 2

Description	Value
Size	5 AC
Multiplier	1
Depth	2.00
Description	

Pay Items

Pay item	Description	Quantity Unit	Unit Price	Extended Amount
110-1-1	CLEARING & GRUBBING	5.00 AC	$9,310.45	$46,552.25
120-1	REGULAR EXCAVATION	16,133.33 CY	$7.07	$114,062.64
400-2-2	CONC CLASS II, ENDWALLS	30.00 CY	$1,390.16	$41,704.80
425-1-541	INLETS, DT BOT, TYPE D, <10'	1.00 EA	$3,063.25	$3,063.25
425-2-71	MANHOLES, J-7, <10'	2.00 EA	$3,912.12	$7,824.24
430-175-142	PIPE CULV, OPT MATL, ROUND, 42"S/CD	56.00 LF	$90.22	$5,052.32
430-175-160	PIPE CULV, OPT MATL, ROUND, 60"S/CD	400.00 LF	$175.80	$70,320.00
550-10-220	FENCING, TYPE B, 5.1-6.0', STANDARD	1,860.00 LF	$10.26	$19,083.60
550-60-234	FENCE GATE,TYP B,SLIDE/CANT,18.1-20'OPEN	2.00 EA	$1,671.36	$3,342.72
570-1-1	PERFORMANCE TURF	24,200.00 SY	$0.54	$13,068.00
	Drainage Component Total			$3,171,680.19

SIGNING COMPONENT

Pay Items

Pay item	Description	Quantity Unit	Unit Price	Extended Amount
700-20-11	SINGLE POST SIGN, F&I, LESS THAN 12 SF	70.00 AS	$277.85	$19,449.50
700-20-12	SINGLE POST SIGN, F&I, 12-20 SF	6.00 AS	$936.39	$5,618.34
700-21-11	MULTI- POST SIGN, F&I, 50 OR <	6.00 AS	$3,841.22	$23,047.32
700-21-12	MULTI- POST SIGN, F&I, 51-100	6.00 AS	$5,135.40	$30,812.40
	Signing Component Total			$78,927.56

LIGHTING COMPONENT

Conventional Lighting Subcomponent

Description	Value
Spacing	MAX

Pay Items

Pay item	Description	Quantity	Unit	Unit Price	Extended Amount
715-1-13	LIGHTING CONDUCTORS, F&I, INSUL, NO.4-2	52,134.44	LF	$2.13	$111,046.36
715-2-11	LIGHTING-CONDUIT, F&I, UNDERGROUND	15,372.19	LF	$3.82	$58,721.77
715-2-12	LIGHTING-CONDUIT, F&I, UNDER EXIST PVMT	2,005.95	LF	$13.77	$27,621.93
715-14-11	LIGHTING - PULL BOX,F&I,ROADSIDE-MOULDED	62.00	EA	$414.51	$25,699.62
715-500-1	POLE CABLE DIST SYS, CONVENTIONAL	62.00	EA	$374.06	$23,191.72
715-511-140	LIGHT POLE COMP,F&I,SGL ARM SM, AL,40'	62.00	EA	$9,272.16	$574,873.92
	Subcomponent Total				$821,155.31
	Lighting Component Total				$821,155.32

BRIDGES COMPONENT

Bridge 000001

Description	Value
Estimate Type	SF Estimate
Primary Estimate	YES
Length (LF)	5,560.00
Width (LF)	99.13
Type	Low Level
Cost Factor	1.15
Structure No.	000001
Removal of Existing Structures area	0.00
Default Cost per SF	$110.00
Factored Cost per SF	$126.50
Final Cost per SF	**$126.69**
Basic Bridge Cost	**$69,722,094.20**
Description	

Bridge Pay Items

Pay item	Description	Quantity	Unit	Unit Price	Extended Amount
400-2-10	CONC CLASS II, APPROACH SLABS	220.29	CY	$325.14	$71,625.09
415-1-9	REINF STEEL- APPROACH SLABS	38,550.75	LB	$0.88	$33,924.66
	Bridge 000001 Total				$69,827,643.95
	Bridges Component Total				$69,827,643.95

Sequence 1 Total $80,512,970.66

Sequence: 3 NDR - New Construction, Divided, Rural **Net Length:** 3.564 MI
18,817 LF

Description: Rural typical. Includes 180' bridge, retention ponds and box culverts. STA 253+71.75- STA 441+89.00

EARTHWORK COMPONENT

User Input Data

Description	Value
Standard Clearing and Grubbing Limits L/R	98.00 / 98.00
Incidental Clearing and Grubbing Area	0.00
Alignment Number	1
Distance	3.564
Top of Structural Course For Begin Section	106.50
Top of Structural Course For End Section	106.50
Horizontal Elevation For Begin Section	100.00
Horizontal Elevation For End Section	100.00
Front Slope L/R	2 to 1 / 2 to 1
Median Slope L/R	6 to 1 / 6 to 1
Median Shoulder Cross Slope L/R	5.00 % / 5.00 %
Outside Shoulder Cross Slope L/R	6.00 % / 6.00 %
Roadway Cross Slope L/R	2.00 % / 2.00 %

Pay Items

Pay item	Description	Quantity	Unit	Unit Price	Extended Amount
110-1-1	CLEARING & GRUBBING	84.67	AC	$9,310.45	$788,315.80
120-6	EMBANKMENT	457,456.67	CY	$3.96	$1,811,528.41

X-Items

Pay item	Description	Quantity	Unit	Unit Price	Extended Amount
120-1	REGULAR EXCAVATION	37,037.00	CY	$7.07	$261,851.59
	Earthwork Component Total				$2,861,695.80

ROADWAY COMPONENT

User Input Data

Description	Value
Number of Lanes	4
Roadway Pavement Width L/R	24.00 / 24.00
Structural Spread Rate	330
Friction Course Spread Rate	80

Pay Items

Pay item	Description	Quantity	Unit	Unit Price	Extended Amount
160-4	TYPE B STABILIZATION	183,987.11	SY	$2.67	$491,245.58
285-709	OPTIONAL BASE,BASE GROUP 09	103,116.41	SY	$22.63	$2,333,524.36
334-1-13	SUPERPAVE ASPHALTIC CONC, TRAFFIC C	16,558.84	TN	$86.58	$1,433,664.37
337-7-22	ASPH CONC FC,INC BIT,FC-5,PG76-22,PMA	4,014.26	TN	$146.94	$589,855.36

Pavement Marking Subcomponent

Description	Value
Include Thermo/Tape/Other	N
Pavement Type	Asphalt
Solid Stripe No. of Paint Applications	2
Solid Stripe No. of Stripes	4
Skip Stripe No. of Paint Applications	2
Skip Stripe No. of Stripes	2

Pay Items

Pay item	Description	Quantity	Unit	Unit Price	Extended Amount
706-3	RETRO-REFLECTIVE PAVEMENT MARKERS	1,443.00	EA	$3.25	$4,689.75
710-11-111	PAINTED PAVT MARK,STD,WHITE,SOLID,6"	28.51	NM	$838.29	$23,899.65
710-11-131	PAINTED PAVT MARK,STD,WHITE,SKIP, 6"	14.26	GM	$282.04	$4,021.89
	Roadway Component Total				$4,880,900.96

SHOULDER COMPONENT

User Input Data

Description	Value
Total Outside Shoulder Width L/R	12.00 / 12.00
Total Outside Shoulder Perf. Turf Width L/R	2.67 / 2.67
Paved Outside Shoulder Width L/R	5.00 / 5.00
Structural Spread Rate	110
Friction Course Spread Rate	80
Total Width (T) / 8" Overlap (O)	T
Rumble Strips No. of Sides	0

Pay Items

Pay item	Description	Quantity	Unit	Unit Price	Extended Amount
285-704	OPTIONAL BASE,BASE GROUP 04	22,287.53	SY	$12.86	$286,617.64
334-1-13	SUPERPAVE ASPHALTIC CONC, TRAFFIC C	1,149.92	TN	$86.58	$99,560.07
337-7-22	ASPH CONC FC,INC BIT,FC-5,PG76-22,PMA	836.31	TN	$146.94	$122,887.39
570-1-1	PERFORMANCE TURF	11,164.67	SY	$0.54	$6,028.92

Erosion Control

Pay Items

Pay item	Description	Quantity	Unit	Unit Price	Extended Amount
104-10-3	SEDIMENT BARRIER	48,923.85	LF	$1.61	$78,767.40
104-11	FLOATING TURBIDITY BARRIER	890.95	LF	$9.47	$8,437.30
104-12	STAKED TURBIDITY BARRIER-NYL REINF PVC	890.95	LF	$5.44	$4,846.77
104-15	SOIL TRACKING PREVENTION DEVICE	4.00	EA	$1,974.93	$7,899.72
104-18	INLET PROTECTION SYSTEM	22.00	EA	$109.72	$2,413.84
107-1	LITTER REMOVAL	86.39	AC	$26.79	$2,314.39

107-2	MOWING	86.39 AC	$59.57	$5,146.25
	Shoulder Component Total			$624,919.69

MEDIAN COMPONENT

User Input Data

Description	Value
Total Median Width	40.00
Performance Turf Width	5.34
Total Median Shoulder Width L/R	8.00 / 8.00
Paved Median Shoulder Width L/R	0.00 / 0.00
Structural Spread Rate	110
Friction Course Spread Rate	80
Total Width (T) / 8" Overlap (O)	T
Rumble Strips No. of Sides	0

Pay Items

Pay item	Description	Quantity	Unit	Unit Price	Extended Amount
570-1-1	PERFORMANCE TURF	11,164.67	SY	$0.54	$6,028.92
	Median Component Total				$6,028.92

DRAINAGE COMPONENT

Pay Items

Pay item	Description	Quantity	Unit	Unit Price	Extended Amount
400-2-2	CONC CLASS II, ENDWALLS	64.15	CY	$1,390.16	$89,178.76
425-1-551	INLETS, DT BOT, TYPE E, <10'	22.00	EA	$2,690.73	$59,196.06
430-174-124	PIPE CULV, OPT MATL, ROUND,24"SD	2,856.00	LF	$52.82	$150,853.92
430-175-124	PIPE CULV, OPT MATL, ROUND, 24"S/CD	1,232.00	LF	$47.31	$58,285.92
430-175-136	PIPE CULV, OPT MATL, ROUND, 36"S/CD	1,056.00	LF	$70.38	$74,321.28
430-984-129	MITERED END SECT, OPTIONAL RD, 24" SD	143.00	EA	$952.07	$136,146.01
524-1-1	CONCRETE DITCH PAVT, NR, 3"	7,127.60	SY	$46.12	$328,724.91
570-1-1	PERFORMANCE TURF	2,508.92	SY	$0.54	$1,354.82

Box Culvert 1

Description	Value
Size	5 x 5
Length	200.00
Multiplier	3

Pay Items

Pay item	Description	Quantity	Unit	Unit Price	Extended Amount
400-4-1	CONC CLASS IV, CULVERTS	376.20	CY	$594.74	$223,741.19
415-1-1	REINF STEEL- ROADWAY	42,756.00	LB	$0.67	$28,646.52

Box Culvert 4

Description	Value
Size	5 x 4
Length	200.00
Multiplier	4

Pay Items

Pay item	Description	Quantity	Unit	Unit Price	Extended Amount
400-4-1	CONC CLASS IV, CULVERTS	448.80	CY	$594.74	$266,919.31
415-1-1	REINF STEEL- ROADWAY	53,064.00	LB	$0.67	$35,552.88

Retention Basin 1

Description	Value
Size	10 AC
Multiplier	1
Depth	2.00
Description	

Pay Items

Pay item	Description	Quantity	Unit	Unit Price	Extended Amount
110-1-1	CLEARING & GRUBBING	10.00	AC	$9,310.45	$93,104.50
120-1	REGULAR EXCAVATION	32,266.67	CY	$7.07	$228,125.36
400-2-2	CONC CLASS II, ENDWALLS	36.00	CY	$1,390.16	$50,045.76
425-1-541	INLETS, DT BOT, TYPE D, <10'	2.00	EA	$3,063.25	$6,126.50
425-2-71	MANHOLES, J-7, <10'	2.00	EA	$3,912.12	$7,824.24
430-175-142	PIPE CULV, OPT MATL, ROUND, 42"S/CD	104.00	LF	$90.22	$9,382.88
430-175-160	PIPE CULV, OPT MATL, ROUND, 60"S/CD	400.00	LF	$175.80	$70,320.00
550-10-220	FENCING, TYPE B, 5.1-6.0', STANDARD	2,780.00	LF	$10.26	$28,522.80
550-60-234	FENCE GATE,TYP B,SLIDE/CANT,18.1-20'OPEN	3.00	EA	$1,671.36	$5,014.08
570-1-1	PERFORMANCE TURF	48,400.00	SY	$0.54	$26,136.00

Retention Basin 2

Description	Value
Size	5 AC
Multiplier	1
Depth	3.00
Description	

Pay Items

Pay item	Description	Quantity	Unit	Unit Price	Extended Amount
110-1-1	CLEARING & GRUBBING	5.00	AC	$9,310.45	$46,552.25
120-1	REGULAR EXCAVATION	24,200.00	CY	$7.07	$171,094.00
400-2-2	CONC CLASS II, ENDWALLS	30.00	CY	$1,390.16	$41,704.80
425-1-541	INLETS, DT BOT, TYPE D, <10'	1.00	EA	$3,063.25	$3,063.25
425-2-71	MANHOLES, J-7, <10'	2.00	EA	$3,912.12	$7,824.24
430-175-142	PIPE CULV, OPT MATL, ROUND, 42"S/CD	56.00	LF	$90.22	$5,052.32

430-175-160	PIPE CULV, OPT MATL, ROUND, 60"S/CD	400.00 LF	$175.80	$70,320.00
550-10-220	FENCING, TYPE B, 5.1-6.0', STANDARD	1,860.00 LF	$10.26	$19,083.60
550-60-234	FENCE GATE,TYP B,SLIDE/CANT,18.1-20'OPEN	2.00 EA	$1,671.36	$3,342.72
570-1-1	PERFORMANCE TURF	24,200.00 SY	$0.54	$13,068.00

Retention Basin 3

Description	Value
Size	5 AC
Multiplier	1
Depth	4.00
Description	

Pay Items

Pay item	Description	Quantity	Unit	Unit Price	Extended Amount
110-1-1	CLEARING & GRUBBING	5.00	AC	$9,310.45	$46,552.25
120-1	REGULAR EXCAVATION	32,266.67	CY	$7.07	$228,125.36
400-2-2	CONC CLASS II, ENDWALLS	30.00	CY	$1,390.16	$41,704.80
425-1-541	INLETS, DT BOT, TYPE D, <10'	1.00	EA	$3,063.25	$3,063.25
425-2-71	MANHOLES, J-7, <10'	2.00	EA	$3,912.12	$7,824.24
430-175-142	PIPE CULV, OPT MATL, ROUND, 42"S/CD	56.00	LF	$90.22	$5,052.32
430-175-160	PIPE CULV, OPT MATL, ROUND, 60"S/CD	400.00	LF	$175.80	$70,320.00
550-10-220	FENCING, TYPE B, 5.1-6.0', STANDARD	1,860.00	LF	$10.26	$19,083.60
550-60-234	FENCE GATE,TYP B,SLIDE/CANT,18.1-20'OPEN	2.00	EA	$1,671.36	$3,342.72
570-1-1	PERFORMANCE TURF	24,200.00	SY	$0.54	$13,068.00

Retention Basin 4

Description	Value
Size	2.5 AC
Multiplier	2
Depth	4.00
Description	

Pay Items

Pay item	Description	Quantity	Unit	Unit Price	Extended Amount
110-1-1	CLEARING & GRUBBING	5.00	AC	$9,310.45	$46,552.25
120-1	REGULAR EXCAVATION	32,266.66	CY	$7.07	$228,125.29
400-2-2	CONC CLASS II, ENDWALLS	36.00	CY	$1,390.16	$50,045.76
425-1-361	INLETS, CURB, TYPE P-6, <10'	2.00	EA	$3,479.15	$6,958.30
425-2-71	MANHOLES, J-7, <10'	2.00	EA	$3,912.12	$7,824.24
430-175-142	PIPE CULV, OPT MATL, ROUND, 42"S/CD	112.00	LF	$90.22	$10,104.64
430-175-160	PIPE CULV, OPT MATL, ROUND, 60"S/CD	400.00	LF	$175.80	$70,320.00
550-10-220	FENCING, TYPE B, 5.1-6.0', STANDARD	2,670.00	LF	$10.26	$27,394.20
550-60-234	FENCE GATE,TYP	2.00	EA	$1,671.36	$3,342.72

570-1-1	B,SLIDE/CANT,18.1-20'OPEN PERFORMANCE TURF	24,200.00 SY	$0.54	$13,068.00
	Drainage Component Total			$3,260,500.82

SIGNING COMPONENT

Pay Items

Pay item	Description	Quantity	Unit	Unit Price	Extended Amount
700-20-11	SINGLE POST SIGN, F&I, LESS THAN 12 SF	8.00	AS	$277.85	$2,222.80
700-20-12	SINGLE POST SIGN, F&I, 12-20 SF	86.00	AS	$936.39	$80,529.54
700-21-11	MULTI- POST SIGN, F&I, 50 OR <	8.00	AS	$3,841.22	$30,729.76
700-21-12	MULTI- POST SIGN, F&I, 51-100	22.00	AS	$5,135.40	$112,978.80
	Signing Component Total				$226,460.90

LIGHTING COMPONENT

Rural Lighting Subcomponent

Description	Value
Multiplier (Number of Poles)	75

Pay Items

Pay item	Description	Quantity	Unit	Unit Price	Extended Amount
715-1-13	LIGHTING CONDUCTORS, F&I, INSUL, NO.4-2	45,000.00	LF	$2.13	$95,850.00
715-2-11	LIGHTING-CONDUIT, F&I, UNDERGROUND	15,000.00	LF	$3.82	$57,300.00
715-4-122	LIGHT POLE COMP, F&I, WS130, 45'	75.00	EA	$3,678.21	$275,865.75
715-14-11	LIGHTING - PULL BOX,F&I,ROADSIDE-MOULDED	75.00	EA	$414.51	$31,088.25
715-500-1	POLE CABLE DIST SYS, CONVENTIONAL	75.00	EA	$374.06	$28,054.50
	Subcomponent Total				$488,158.50
	Lighting Component Total				$488,158.50

BRIDGES COMPONENT

Bridge 000002

Description	Value
Estimate Type	SF Estimate
Primary Estimate	YES
Length (LF)	180.00
Width (LF)	99.13
Type	Low Level
Cost Factor	1.15
Structure No.	000002
Removal of Existing Structures area	0.00
Default Cost per SF	$110.00
Factored Cost per SF	$126.50
Final Cost per SF	**$132.42**

Basic Bridge Cost **$2,257,190.10**

Description CLEAR CREEK BRIDGE

Bridge Pay Items

Pay item	Description	Quantity Unit	Unit Price	Extended Amount
400-2-10	CONC CLASS II, APPROACH SLABS	220.29 CY	$325.14	$71,625.09
415-1-9	REINF STEEL- APPROACH SLABS	38,550.75 LB	$0.88	$33,924.66
	Bridge 000002 Total			$2,362,739.85
	Bridges Component Total			$2,362,739.85

Sequence 3 Total $14,711,405.44

Sequence: 4 NDU - New Construction, Divided, Urban **Net Length:** 0.251 MI 1,326 LF

Description: Urban Sections - STA 441+89.00 - STA 455+15

EARTHWORK COMPONENT

User Input Data

Description	Value
Standard Clearing and Grubbing Limits L/R	71.00 / 59.00
Incidental Clearing and Grubbing Area	0.00
Alignment Number	1
Distance	0.250
Top of Structural Course For Begin Section	102.50
Top of Structural Course For End Section	102.50
Horizontal Elevation For Begin Section	100.00
Horizontal Elevation For End Section	100.00
Front Slope L/R	2 to 1 / 3 to 1
Median Shoulder Cross Slope L/R	4.00 % / 4.00 %
Outside Shoulder Cross Slope L/R	2.00 % / 2.00 %
Roadway Cross Slope L/R	2.00 % / 2.00 %

Pay Items

Pay item	Description	Quantity Unit	Unit Price	Extended Amount
110-1-1	CLEARING & GRUBBING	3.96 AC	$9,310.45	$36,869.38
120-6	EMBANKMENT	9,504.00 CY	$3.96	$37,635.84
	Earthwork Component Total			$74,505.22

ROADWAY COMPONENT

User Input Data

Description	Value
Number of Lanes	4
Roadway Pavement Width L/R	28.00 / 28.00
Structural Spread Rate	330
Friction Course Spread Rate	165

Pay Items

Pay item	Description	Quantity Unit	Unit Price	Extended Amount
160-4	TYPE B STABILIZATION	9,769.73 SY	$2.67	$26,085.18
285-709	OPTIONAL BASE,BASE GROUP 09	8,249.47 SY	$22.63	$186,685.51
334-1-13	SUPERPAVE ASPHALTIC CONC, TRAFFIC C	1,361.16 TN	$86.58	$117,849.23
337-7-33	ASPH CONC FC,TRAFFIC C,FC-12.5,RUBBER	680.58 TN	$92.81	$63,164.63

X-Items

Pay item	Description	Quantity Unit	Unit Price	Extended Amount
710-11-160	PAINTED PAVT MARK,STD,WHITE,MESSAGE **Comment:** 2 applications for bike lanes	26.00 EA	$46.80	$1,216.80

Turnouts/Crossovers Subcomponent

Description	Value
Asphalt Adjustment	0.00
Stabilization Code	N
Base Code	N
Friction Course Code	N

Pavement Marking Subcomponent

Description	Value
Include Thermo/Tape/Other	N
Pavement Type	Asphalt
Solid Stripe No. of Paint Applications	2
Solid Stripe No. of Stripes	4
Skip Stripe No. of Paint Applications	2
Skip Stripe No. of Stripes	2

Pay Items

Pay item	Description	Quantity	Unit	Unit Price	Extended Amount
706-3	RETRO-REFLECTIVE PAVEMENT MARKERS	102.00	EA	$3.25	$331.50
710-11-111	PAINTED PAVT MARK,STD,WHITE,SOLID,6"	2.01	NM	$838.29	$1,684.96
710-11-131	PAINTED PAVT MARK,STD,WHITE,SKIP, 6"	1.00	GM	$282.04	$282.04
	Roadway Component Total				$397,299.85

SHOULDER COMPONENT

User Input Data

Description	Value
Total Outside Shoulder Width L/R	12.25 / 7.25
Total Outside Shoulder Perf. Turf Width L/R	10.00 / 5.00
Sidewalk Width L/R	0.00 / 0.00

Pay Items

Pay item	Description	Quantity	Unit	Unit Price	Extended Amount
520-1-10	CONCRETE CURB & GUTTER, TYPE F	1,325.81	LF	$11.57	$15,339.62
520-1-10	CONCRETE CURB & GUTTER, TYPE F	1,325.81	LF	$11.57	$15,339.62
570-1-1	PERFORMANCE TURF	2,209.68	SY	$0.54	$1,193.23

Erosion Control

Pay Items

Pay item	Description	Quantity	Unit	Unit Price	Extended Amount
104-10-3	SEDIMENT BARRIER	2,651.62	LF	$1.61	$4,269.11
104-11	FLOATING TURBIDITY BARRIER	62.78	LF	$9.47	$594.53
104-12	STAKED TURBIDITY BARRIER-NYL REINF PVC	62.78	LF	$5.44	$341.52
104-15	SOIL TRACKING PREVENTION	1.00	EA	$1,974.93	$1,974.93

	DEVICE			
104-18	INLET PROTECTION SYSTEM	13.00 EA	$109.72	$1,426.36
107-1	LITTER REMOVAL	6.39 AC	$26.79	$171.19
107-2	MOWING	6.39 AC	$59.57	$380.65
	Shoulder Component Total			$41,030.76

MEDIAN COMPONENT

User Input Data

Description	Value
Total Median Width	24.00
Performance Turf Width	19.50

Pay Items

Pay item	Description	Quantity	Unit	Unit Price	Extended Amount
520-1-7	CONCRETE CURB & GUTTER, TYPE E	2,651.62	LF	$12.01	$31,845.96
570-1-1	PERFORMANCE TURF	2,872.58	SY	$0.54	$1,551.19
	Median Component Total				$33,397.15

DRAINAGE COMPONENT

Pay Items

Pay item	Description	Quantity	Unit	Unit Price	Extended Amount
400-2-2	CONC CLASS II, ENDWALLS	4.52	CY	$1,390.16	$6,283.52
425-1-351	INLETS, CURB, TYPE P-5, <10'	10.00	EA	$2,997.62	$29,976.20
425-1-451	INLETS, CURB, TYPE J-5, <10'	3.00	EA	$4,747.89	$14,243.67
425-1-521	INLETS, DT BOT, TYPE C, <10'	2.00	EA	$2,042.97	$4,085.94
425-2-41	MANHOLES, P-7, <10'	2.00	EA	$2,438.41	$4,876.82
430-175-124	PIPE CULV, OPT MATL, ROUND, 24"S/CD	672.00	LF	$47.31	$31,792.32
430-175-136	PIPE CULV, OPT MATL, ROUND, 36"S/CD	64.00	LF	$70.38	$4,504.32
430-175-148	PIPE CULV, OPT MATL, ROUND, 48"S/CD	1,256.00	LF	$99.78	$125,323.68
570-1-1	PERFORMANCE TURF	76.33	SY	$0.54	$41.22

Box Culvert 1

Description	Value
Size	7 x 4
Length	150.00
Multiplier	1

Pay Items

Pay item	Description	Quantity	Unit	Unit Price	Extended Amount
400-4-1	CONC CLASS IV, CULVERTS	112.50	CY	$594.74	$66,908.25
415-1-1	REINF STEEL- ROADWAY	13,794.00	LB	$0.67	$9,241.98

Retention Basin 8

Description	Value
Size	2.5 AC
Multiplier	1
Depth	4.00
Description	

Pay Items

Pay item	Description	Quantity	Unit	Unit Price	Extended Amount
110-1-1	CLEARING & GRUBBING	2.50	AC	$9,310.45	$23,276.12
120-1	REGULAR EXCAVATION	16,133.33	CY	$7.07	$114,062.64
400-2-2	CONC CLASS II, ENDWALLS	18.00	CY	$1,390.16	$25,022.88
425-1-361	INLETS, CURB, TYPE P-6, <10'	1.00	EA	$3,479.15	$3,479.15
425-2-71	MANHOLES, J-7, <10'	1.00	EA	$3,912.12	$3,912.12
430-175-142	PIPE CULV, OPT MATL, ROUND, 42"S/CD	56.00	LF	$90.22	$5,052.32
430-175-160	PIPE CULV, OPT MATL, ROUND, 60"S/CD	200.00	LF	$175.80	$35,160.00
550-10-220	FENCING, TYPE B, 5.1-6.0', STANDARD	1,335.00	LF	$10.26	$13,697.10
550-60-234	FENCE GATE,TYP B,SLIDE/CANT,18.1-20'OPEN	1.00	EA	$1,671.36	$1,671.36
570-1-1	PERFORMANCE TURF	12,100.00	SY	$0.54	$6,534.00
	Drainage Component Total				$529,145.62

SIGNING COMPONENT

Pay Items

Pay item	Description	Quantity	Unit	Unit Price	Extended Amount
700-20-11	SINGLE POST SIGN, F&I, LESS THAN 12 SF	7.00	AS	$277.85	$1,944.95
700-20-12	SINGLE POST SIGN, F&I, 12-20 SF	1.00	AS	$936.39	$936.39
700-21-11	MULTI- POST SIGN, F&I, 50 OR <	1.00	AS	$3,841.22	$3,841.22
700-21-12	MULTI- POST SIGN, F&I, 51-100	1.00	AS	$5,135.40	$5,135.40
	Signing Component Total				$11,857.96

LIGHTING COMPONENT

Conventional Lighting Subcomponent

Description	Value
Spacing	MAX

Pay Items

Pay item	Description	Quantity	Unit	Unit Price	Extended Amount
715-1-13	LIGHTING CONDUCTORS, F&I, INSUL, NO.4-2	4,496.45	LF	$2.13	$9,577.44
715-2-11	LIGHTING-CONDUIT, F&I, UNDERGROUND	1,325.81	LF	$3.82	$5,064.59
715-2-12	LIGHTING-CONDUIT, F&I, UNDER EXIST PVMT	173.01	LF	$13.77	$2,382.35
715-14-11	LIGHTING - PULL	6.00	EA	$414.51	$2,487.06

715-500-1	BOX,F&I,ROADSIDE-MOULDED POLE CABLE DIST SYS, CONVENTIONAL	6.00 EA	$374.06	$2,244.36
715-511-140	LIGHT POLE COMP,F&I,SGL ARM SM, AL,40'	6.00 EA	$9,272.16	$55,632.96
	Subcomponent Total			$77,388.76
	Lighting Component Total			$77,388.76

Sequence 4 Total $1,164,625.32

Date: 2/22/2013 3:17:06 PM

FDOT Long Range Estimating System - Production

R3: Project Details by Sequence Report

Project: 416748-3-22-02 **Letting Date:** 01/2099

Description: SR 87S / SR 87N CONNECTOR NEW ALIGNMENT

District: 03 **County:** 58 SANTA ROSA **Market Area:** 01 **Units:** English
Contract Class: 1 **Lump Sum Project:** N **Design/Build:** N **Project Length:** 7.910 MI

Project Manager: PEGGY KELLEY

Version 12 Project Grand Total **$116,780,691.72**
Description: Alignment 1 - Urban/Rural Typical Section with VE recommendations - 2/21/13

Project Sequences Subtotal			**$96,389,001.42**
102-1	Maintenance of Traffic	10.00 %	$9,638,900.14
101-1	Mobilization	10.00 %	$10,602,790.16
Project Sequences Total			**$116,630,691.72**
Project Unknowns		0.00 %	$0.00
Design/Build		0.00 %	$0.00

Non-Bid Components:

Pay item	Description	Quantity	Unit	Unit Price	Extended Amount
999-25	INITIAL CONTINGENCY AMOUNT (DO NOT BID)		LS	$150,000.00	$150,000.00
Project Non-Bid Subtotal					**$150,000.00**
Version 12 Project Grand Total					**$116,780,691.72**

Date: 2/22/2013 3:16:00 PM

FDOT Long Range Estimating System - Production

R3: Project Details by Sequence Report

Project: 416748-3-22-02 **Letting Date:** 01/2099

Description: SR 87S / SR 87N CONNECTOR NEW ALIGNMENT

District: 03 **County:** 58 SANTA ROSA **Market Area:** 01 **Units:** English
Contract Class: 1 **Lump Sum Project:** N **Design/Build:** N **Project Length:** 7.910 MI

Project Manager: PEGGY KELLEY

Version 13 Project Grand Total **$120,409,699.67**
Description: Alignment 2 with VE recommendations - 2-22-13

Sequence: 1 NDU - New Construction, Divided, Urban **Net Length:** 2.911 MI
15,372 LF

Description: Urban Sections - STA 100+00 - STA 253+71.75

EARTHWORK COMPONENT

User Input Data

Description	Value
Standard Clearing and Grubbing Limits L/R	71.00 / 59.00
Incidental Clearing and Grubbing Area	0.00
Alignment Number	1
Distance	2.910
Top of Structural Course For Begin Section	102.50
Top of Structural Course For End Section	102.50
Horizontal Elevation For Begin Section	100.00
Horizontal Elevation For End Section	100.00
Front Slope L/R	2 to 1 / 3 to 1
Median Shoulder Cross Slope L/R	4.00 % / 4.00 %
Outside Shoulder Cross Slope L/R	2.00 % / 2.00 %
Roadway Cross Slope L/R	2.00 % / 2.00 %

Pay Items

Pay item	Description	Quantity Unit	Unit Price	Extended Amount
110-1-1	CLEARING & GRUBBING	45.87 AC	$9,310.45	$427,070.34
120-6	EMBANKMENT	110,626.56 CY	$3.96	$438,081.18
	Earthwork Component Total			$865,151.52

ROADWAY COMPONENT

User Input Data

Description	Value
Number of Lanes	4
Roadway Pavement Width L/R	28.00 / 28.00
Structural Spread Rate	330
Friction Course Spread Rate	165

Pay Items

Pay item	Description	Quantity	Unit	Unit Price	Extended Amount
160-4	TYPE B STABILIZATION	113,275.97	SY	$2.67	$302,446.84
285-709	OPTIONAL BASE,BASE GROUP 09	95,649.19	SY	$22.63	$2,164,541.17
334-1-13	SUPERPAVE ASPHALTIC CONC, TRAFFIC C	15,782.12	TN	$86.58	$1,366,415.95
337-7-33	ASPH CONC FC,TRAFFIC C,FC-12.5,RUBBER	7,891.06	TN	$92.81	$732,369.28

X-Items

Pay item	Description	Quantity	Unit	Unit Price	Extended Amount
710-11-160	PAINTED PAVT MARK,STD,WHITE,MESSAGE **Comment:** 2 applications for bike lanes	62.00	EA	$46.80	$2,901.60

Turnouts/Crossovers Subcomponent

Description	Value
Asphalt Adjustment	0.00
Stabilization Code	N
Base Code	N
Friction Course Code	N

Pavement Marking Subcomponent

Description	Value
Include Thermo/Tape/Other	N
Pavement Type	Asphalt
Solid Stripe No. of Paint Applications	2
Solid Stripe No. of Stripes	4
Skip Stripe No. of Paint Applications	2
Skip Stripe No. of Stripes	2

Pay Items

Pay item	Description	Quantity	Unit	Unit Price	Extended Amount
706-3	RETRO-REFLECTIVE PAVEMENT MARKERS	1,179.00	EA	$3.25	$3,831.75
710-11-111	PAINTED PAVT MARK,STD,WHITE,SOLID,6"	23.29	NM	$838.29	$19,523.77
710-11-131	PAINTED PAVT MARK,STD,WHITE,SKIP, 6"	11.65	GM	$282.04	$3,285.77

Peripherals Subcomponent

Description	Value
Off Road Bike Path(s)	0
Off Road Bike Path Width L/R	12.00 / 0.00
Bike Path Structural Spread Rate	100
Noise Barrier Wall Length	0.00
Noise Barrier Wall Begin Height	0.00
Noise Barrier Wall End Height	0.00

Pay Items

Pay item	Description	Quantity	Unit	Unit Price	Extended Amount
160-4	TYPE B STABILIZATION	27,328.34	SY	$2.67	$72,966.67

285-701	OPTIONAL BASE,BASE GROUP 01	20,496.26 SY	$5.02	$102,891.23
334-1-11	SUPERPAVE ASPHALTIC CONC, TRAFFIC A	1,024.81 TN	$128.26	$131,442.13
	Roadway Component Total			$4,902,616.16

SHOULDER COMPONENT

User Input Data

Description	Value
Total Outside Shoulder Width L/R	12.25 / 7.25
Total Outside Shoulder Perf. Turf Width L/R	10.00 / 5.00
Sidewalk Width L/R	0.00 / 0.00

Pay Items

Pay item	Description	Quantity Unit	Unit Price	Extended Amount
520-1-10	CONCRETE CURB & GUTTER, TYPE F	15,372.19 LF	$11.57	$177,856.24
520-1-10	CONCRETE CURB & GUTTER, TYPE F	15,372.19 LF	$11.57	$177,856.24
570-1-1	PERFORMANCE TURF	25,620.32 SY	$0.54	$13,834.97

Erosion Control

Pay Items

Pay item	Description	Quantity Unit	Unit Price	Extended Amount
104-10-3	SEDIMENT BARRIER	30,744.38 LF	$1.61	$49,498.45
104-11	FLOATING TURBIDITY BARRIER	727.85 LF	$9.47	$6,892.74
104-12	STAKED TURBIDITY BARRIER-NYL REINF PVC	727.85 LF	$5.44	$3,959.50
104-15	SOIL TRACKING PREVENTION DEVICE	3.00 EA	$1,974.93	$5,924.79
104-18	INLET PROTECTION SYSTEM	149.00 EA	$109.72	$16,348.28
107-1	LITTER REMOVAL	74.10 AC	$26.79	$1,985.14
107-2	MOWING	74.10 AC	$59.57	$4,414.14
	Shoulder Component Total			$458,570.49

MEDIAN COMPONENT

User Input Data

Description	Value
Total Median Width	24.00
Performance Turf Width	19.50

Pay Items

Pay item	Description	Quantity Unit	Unit Price	Extended Amount
520-1-7	CONCRETE CURB & GUTTER, TYPE E	30,744.38 LF	$12.01	$369,240.00
570-1-1	PERFORMANCE TURF	33,306.42 SY	$0.54	$17,985.47
	Median Component Total			$387,225.47

DRAINAGE COMPONENT

Pay Items

Pay item	Description	Quantity	Unit	Unit Price	Extended Amount
400-2-2	CONC CLASS II, ENDWALLS	52.41	CY	$1,390.16	$72,858.29
425-1-351	INLETS, CURB, TYPE P-5, <10'	105.00	EA	$2,997.62	$314,750.10
425-1-451	INLETS, CURB, TYPE J-5, <10'	30.00	EA	$4,747.89	$142,436.70
425-1-521	INLETS, DT BOT, TYPE C, <10'	15.00	EA	$2,042.97	$30,644.55
425-2-41	MANHOLES, P-7, <10'	15.00	EA	$2,438.41	$36,576.15
430-175-124	PIPE CULV, OPT MATL, ROUND, 24"S/CD	7,704.00	LF	$47.31	$364,476.24
430-175-136	PIPE CULV, OPT MATL, ROUND, 36"S/CD	688.00	LF	$70.38	$48,421.44
430-175-148	PIPE CULV, OPT MATL, ROUND, 48"S/CD	14,560.00	LF	$99.78	$1,452,796.80
570-1-1	PERFORMANCE TURF	885.07	SY	$0.54	$477.94

Box Culvert 1

Description	Value
Size	7 x 4
Length	150.00
Multiplier	1

Pay Items

Pay item	Description	Quantity	Unit	Unit Price	Extended Amount
400-4-1	CONC CLASS IV, CULVERTS	112.50	CY	$594.74	$66,908.25
415-1-1	REINF STEEL- ROADWAY	13,794.00	LB	$0.67	$9,241.98

Box Culvert 2

Description	Value
Size	7 x 4
Length	150.00
Multiplier	1

Pay Items

Pay item	Description	Quantity	Unit	Unit Price	Extended Amount
400-4-1	CONC CLASS IV, CULVERTS	112.50	CY	$594.74	$66,908.25
415-1-1	REINF STEEL- ROADWAY	13,794.00	LB	$0.67	$9,241.98

Retention Basin 1

Description	Value
Size	2.5 AC
Multiplier	1
Depth	4.00
Description	

Pay Items

Pay item	Description	Quantity	Unit	Unit Price	Extended Amount
110-1-1	CLEARING & GRUBBING	2.50	AC	$9,310.45	$23,276.12

120-1	REGULAR EXCAVATION	16,133.33 CY	$7.07	$114,062.64
400-2-2	CONC CLASS II, ENDWALLS	18.00 CY	$1,390.16	$25,022.88
425-1-361	INLETS, CURB, TYPE P-6, <10'	1.00 EA	$3,479.15	$3,479.15
425-2-71	MANHOLES, J-7, <10'	1.00 EA	$3,912.12	$3,912.12
430-175-142	PIPE CULV, OPT MATL, ROUND, 42"S/CD	56.00 LF	$90.22	$5,052.32
430-175-160	PIPE CULV, OPT MATL, ROUND, 60"S/CD	200.00 LF	$175.80	$35,160.00
550-10-220	FENCING, TYPE B, 5.1-6.0', STANDARD	1,335.00 LF	$10.26	$13,697.10
550-60-234	FENCE GATE,TYP B,SLIDE/CANT,18.1-20'OPEN	1.00 EA	$1,671.36	$1,671.36
570-1-1	PERFORMANCE TURF	12,100.00 SY	$0.54	$6,534.00

Retention Basin 2

Description	Value
Size	5 AC
Multiplier	1
Depth	2.00
Description	

Pay Items

Pay item	Description	Quantity Unit	Unit Price	Extended Amount
110-1-1	CLEARING & GRUBBING	5.00 AC	$9,310.45	$46,552.25
120-1	REGULAR EXCAVATION	16,133.33 CY	$7.07	$114,062.64
400-2-2	CONC CLASS II, ENDWALLS	30.00 CY	$1,390.16	$41,704.80
425-1-541	INLETS, DT BOT, TYPE D, <10'	1.00 EA	$3,063.25	$3,063.25
425-2-71	MANHOLES, J-7, <10'	2.00 EA	$3,912.12	$7,824.24
430-175-142	PIPE CULV, OPT MATL, ROUND, 42"S/CD	56.00 LF	$90.22	$5,052.32
430-175-160	PIPE CULV, OPT MATL, ROUND, 60"S/CD	400.00 LF	$175.80	$70,320.00
550-10-220	FENCING, TYPE B, 5.1-6.0', STANDARD	1,860.00 LF	$10.26	$19,083.60
550-60-234	FENCE GATE,TYP B,SLIDE/CANT,18.1-20'OPEN	2.00 EA	$1,671.36	$3,342.72
570-1-1	PERFORMANCE TURF	24,200.00 SY	$0.54	$13,068.00
	Drainage Component Total			$3,171,680.19

SIGNING COMPONENT

Pay Items

Pay item	Description	Quantity Unit	Unit Price	Extended Amount
700-20-11	SINGLE POST SIGN, F&I, LESS THAN 12 SF	70.00 AS	$277.85	$19,449.50
700-20-12	SINGLE POST SIGN, F&I, 12-20 SF	6.00 AS	$936.39	$5,618.34
700-21-11	MULTI- POST SIGN, F&I, 50 OR <	6.00 AS	$3,841.22	$23,047.32
700-21-12	MULTI- POST SIGN, F&I, 51-100	6.00 AS	$5,135.40	$30,812.40
	Signing Component Total			$78,927.56

LIGHTING COMPONENT

Conventional Lighting Subcomponent

Description	Value
Spacing	MAX

Pay Items

Pay item	Description	Quantity	Unit	Unit Price	Extended Amount
715-1-13	LIGHTING CONDUCTORS, F&I, INSUL, NO.4-2	52,134.44	LF	$2.13	$111,046.36
715-2-11	LIGHTING-CONDUIT, F&I, UNDERGROUND	15,372.19	LF	$3.82	$58,721.77
715-2-12	LIGHTING-CONDUIT, F&I, UNDER EXIST PVMT	2,005.95	LF	$13.77	$27,621.93
715-14-11	LIGHTING - PULL BOX,F&I,ROADSIDE-MOULDED	62.00	EA	$414.51	$25,699.62
715-500-1	POLE CABLE DIST SYS, CONVENTIONAL	62.00	EA	$374.06	$23,191.72
715-511-140	LIGHT POLE COMP,F&I,SGL ARM SM, AL,40'	62.00	EA	$9,272.16	$574,873.92
	Subcomponent Total				$821,155.31
	Lighting Component Total				$821,155.32

BRIDGES COMPONENT

Bridge 000001

Description	Value
Estimate Type	SF Estimate
Primary Estimate	YES
Length (LF)	5,560.00
Width (LF)	99.13
Type	Low Level
Cost Factor	1.15
Structure No.	000001
Removal of Existing Structures area	0.00
Default Cost per SF	$110.00
Factored Cost per SF	$126.50
Final Cost per SF	**$126.69**
Basic Bridge Cost	**$69,722,094.20**
Description	

Bridge Pay Items

Pay item	Description	Quantity	Unit	Unit Price	Extended Amount
400-2-10	CONC CLASS II, APPROACH SLABS	220.29	CY	$325.14	$71,625.09
415-1-9	REINF STEEL- APPROACH SLABS	38,550.75	LB	$0.88	$33,924.66
	Bridge 000001 Total				$69,827,643.95
	Bridges Component Total				$69,827,643.95

Sequence 1 Total $80,512,970.66

Sequence: 3 NDR - New Construction, Divided, Rural **Net Length:** 4.286 MI
22,628 LF

Description: Rural typical. Includes 180' bridge, retention ponds and box culverts. STA 253+71.75- STA 480+00

EARTHWORK COMPONENT

User Input Data

Description	Value
Standard Clearing and Grubbing Limits L/R	98.00 / 98.00
Incidental Clearing and Grubbing Area	0.00
Alignment Number	1
Distance	4.290
Top of Structural Course For Begin Section	105.70
Top of Structural Course For End Section	105.70
Horizontal Elevation For Begin Section	100.00
Horizontal Elevation For End Section	100.00
Front Slope L/R	2 to 1 / 2 to 1
Median Slope L/R	6 to 1 / 6 to 1
Median Shoulder Cross Slope L/R	5.00 % / 5.00 %
Outside Shoulder Cross Slope L/R	6.00 % / 6.00 %
Roadway Cross Slope L/R	2.00 % / 2.00 %

Pay Items

Pay item	Description	Quantity	Unit	Unit Price	Extended Amount
110-1-1	CLEARING & GRUBBING	101.82	AC	$9,310.45	$947,990.02
120-6	EMBANKMENT	462,319.38	CY	$3.96	$1,830,784.74

X-Items

Pay item	Description	Quantity	Unit	Unit Price	Extended Amount
120-1	REGULAR EXCAVATION	37,037.00	CY	$7.07	$261,851.59
	Earthwork Component Total				$3,040,626.35

ROADWAY COMPONENT

User Input Data

Description	Value
Number of Lanes	4
Roadway Pavement Width L/R	24.00 / 24.00
Structural Spread Rate	330
Friction Course Spread Rate	80

Pay Items

Pay item	Description	Quantity	Unit	Unit Price	Extended Amount
160-4	TYPE B STABILIZATION	221,251.24	SY	$2.67	$590,740.81
285-709	OPTIONAL BASE,BASE GROUP 09	124,001.26	SY	$22.63	$2,806,148.51
334-1-13	SUPERPAVE ASPHALTIC CONC, TRAFFIC C	19,912.61	TN	$86.58	$1,724,033.77
337-7-22	ASPH CONC FC,INC BIT,FC-5,PG76-22,PMA	4,827.30	TN	$146.94	$709,323.46

Pavement Marking Subcomponent

Description	Value
Include Thermo/Tape/Other	N
Pavement Type	Asphalt
Solid Stripe No. of Paint Applications	2
Solid Stripe No. of Stripes	4
Skip Stripe No. of Paint Applications	2
Skip Stripe No. of Stripes	2

Pay Items

Pay item	Description	Quantity	Unit	Unit Price	Extended Amount
706-3	RETRO-REFLECTIVE PAVEMENT MARKERS	1,736.00	EA	$3.25	$5,642.00
710-11-111	PAINTED PAVT MARK,STD,WHITE,SOLID,6"	34.28	NM	$838.29	$28,736.58
710-11-131	PAINTED PAVT MARK,STD,WHITE,SKIP, 6"	17.14	GM	$282.04	$4,834.17
	Roadway Component Total				$5,869,459.30

SHOULDER COMPONENT

User Input Data

Description	Value
Total Outside Shoulder Width L/R	12.00 / 12.00
Total Outside Shoulder Perf. Turf Width L/R	2.67 / 2.67
Paved Outside Shoulder Width L/R	5.00 / 5.00
Structural Spread Rate	110
Friction Course Spread Rate	80
Total Width (T) / 8" Overlap (O)	T
Rumble Strips No. of Sides	0

Pay Items

Pay item	Description	Quantity	Unit	Unit Price	Extended Amount
285-704	OPTIONAL BASE,BASE GROUP 04	26,801.57	SY	$12.86	$344,668.19
334-1-13	SUPERPAVE ASPHALTIC CONC, TRAFFIC C	1,382.82	TN	$86.58	$119,724.56
337-7-22	ASPH CONC FC,INC BIT,FC-5,PG76-22,PMA	1,005.69	TN	$146.94	$147,776.09
570-1-1	PERFORMANCE TURF	13,425.93	SY	$0.54	$7,250.00

Erosion Control

Pay Items

Pay item	Description	Quantity	Unit	Unit Price	Extended Amount
104-10-3	SEDIMENT BARRIER	58,832.72	LF	$1.61	$94,720.68
104-11	FLOATING TURBIDITY BARRIER	1,071.40	LF	$9.47	$10,146.16
104-12	STAKED TURBIDITY BARRIER-NYL REINF PVC	1,071.40	LF	$5.44	$5,828.42
104-15	SOIL TRACKING PREVENTION DEVICE	5.00	EA	$1,974.93	$9,874.65
104-18	INLET PROTECTION SYSTEM	26.00	EA	$109.72	$2,852.72
107-1	LITTER REMOVAL	103.88	AC	$26.79	$2,782.95

107-2	MOWING	103.88 AC	$59.57	$6,188.13
	Shoulder Component Total			$751,812.55

MEDIAN COMPONENT

User Input Data

Description	Value
Total Median Width	40.00
Performance Turf Width	5.34
Total Median Shoulder Width L/R	8.00 / 8.00
Paved Median Shoulder Width L/R	0.00 / 0.00
Structural Spread Rate	110
Friction Course Spread Rate	80
Total Width (T) / 8" Overlap (O)	T
Rumble Strips No. of Sides	0

Pay Items

Pay item	Description	Quantity	Unit	Unit Price	Extended Amount
570-1-1	PERFORMANCE TURF	13,425.93	SY	$0.54	$7,250.00
	Median Component Total				$7,250.00

DRAINAGE COMPONENT

Pay Items

Pay item	Description	Quantity	Unit	Unit Price	Extended Amount
400-2-2	CONC CLASS II, ENDWALLS	77.14	CY	$1,390.16	$107,236.94
425-1-551	INLETS, DT BOT, TYPE E, <10'	26.00	EA	$2,690.73	$69,958.98
430-174-124	PIPE CULV, OPT MATL, ROUND,24"SD	3,432.00	LF	$52.82	$181,278.24
430-175-124	PIPE CULV, OPT MATL, ROUND, 24"S/CD	1,480.00	LF	$47.31	$70,018.80
430-175-136	PIPE CULV, OPT MATL, ROUND, 36"S/CD	1,272.00	LF	$70.38	$89,523.36
430-984-129	MITERED END SECT, OPTIONAL RD, 24" SD	172.00	EA	$952.07	$163,756.04
524-1-1	CONCRETE DITCH PAVT, NR, 3"	8,571.20	SY	$46.12	$395,303.74
570-1-1	PERFORMANCE TURF	3,017.06	SY	$0.54	$1,629.21

Box Culvert 1

Description	Value
Size	5 x 5
Length	200.00
Multiplier	3

Pay Items

Pay item	Description	Quantity	Unit	Unit Price	Extended Amount
400-4-1	CONC CLASS IV, CULVERTS	376.20	CY	$594.74	$223,741.19
415-1-1	REINF STEEL- ROADWAY	42,756.00	LB	$0.67	$28,646.52

Box Culvert 4

Description	Value
Size	5 x 4
Length	200.00
Multiplier	3

Pay Items

Pay item	Description	Quantity	Unit	Unit Price	Extended Amount
400-4-1	CONC CLASS IV, CULVERTS	336.60	CY	$594.74	$200,189.48
415-1-1	REINF STEEL- ROADWAY	39,798.00	LB	$0.67	$26,664.66

Retention Basin 1

Description	Value
Size	10 AC
Multiplier	1
Depth	2.00
Description	

Pay Items

Pay item	Description	Quantity	Unit	Unit Price	Extended Amount
110-1-1	CLEARING & GRUBBING	10.00	AC	$9,310.45	$93,104.50
120-1	REGULAR EXCAVATION	32,266.67	CY	$7.07	$228,125.36
400-2-2	CONC CLASS II, ENDWALLS	36.00	CY	$1,390.16	$50,045.76
425-1-541	INLETS, DT BOT, TYPE D, <10'	2.00	EA	$3,063.25	$6,126.50
425-2-71	MANHOLES, J-7, <10'	2.00	EA	$3,912.12	$7,824.24
430-175-142	PIPE CULV, OPT MATL, ROUND, 42"S/CD	104.00	LF	$90.22	$9,382.88
430-175-160	PIPE CULV, OPT MATL, ROUND, 60"S/CD	400.00	LF	$175.80	$70,320.00
550-10-220	FENCING, TYPE B, 5.1-6.0', STANDARD	2,780.00	LF	$10.26	$28,522.80
550-60-234	FENCE GATE,TYP B,SLIDE/CANT,18.1-20'OPEN	3.00	EA	$1,671.36	$5,014.08
570-1-1	PERFORMANCE TURF	48,400.00	SY	$0.54	$26,136.00

Retention Basin 2

Description	Value
Size	5 AC
Multiplier	1
Depth	6.00
Description	

Pay Items

Pay item	Description	Quantity	Unit	Unit Price	Extended Amount
110-1-1	CLEARING & GRUBBING	5.00	AC	$9,310.45	$46,552.25
120-1	REGULAR EXCAVATION	48,400.00	CY	$7.07	$342,188.00
400-2-2	CONC CLASS II, ENDWALLS	30.00	CY	$1,390.16	$41,704.80
425-1-541	INLETS, DT BOT, TYPE D, <10'	1.00	EA	$3,063.25	$3,063.25
425-2-71	MANHOLES, J-7, <10'	2.00	EA	$3,912.12	$7,824.24
430-175-142	PIPE CULV, OPT MATL, ROUND, 42"S/CD	56.00	LF	$90.22	$5,052.32

430-175-160	PIPE CULV, OPT MATL, ROUND, 60"S/CD	400.00 LF	$175.80	$70,320.00
550-10-220	FENCING, TYPE B, 5.1-6.0', STANDARD	1,860.00 LF	$10.26	$19,083.60
550-60-234	FENCE GATE,TYP B,SLIDE/CANT,18.1-20'OPEN	2.00 EA	$1,671.36	$3,342.72
570-1-1	PERFORMANCE TURF	24,200.00 SY	$0.54	$13,068.00

Retention Basin 3

Description	Value
Size	5 AC
Multiplier	1
Depth	4.00
Description	

Pay Items

Pay item	Description	Quantity	Unit	Unit Price	Extended Amount
110-1-1	CLEARING & GRUBBING	5.00	AC	$9,310.45	$46,552.25
120-1	REGULAR EXCAVATION	32,266.67	CY	$7.07	$228,125.36
400-2-2	CONC CLASS II, ENDWALLS	30.00	CY	$1,390.16	$41,704.80
425-1-541	INLETS, DT BOT, TYPE D, <10'	1.00	EA	$3,063.25	$3,063.25
425-2-71	MANHOLES, J-7, <10'	2.00	EA	$3,912.12	$7,824.24
430-175-142	PIPE CULV, OPT MATL, ROUND, 42"S/CD	56.00	LF	$90.22	$5,052.32
430-175-160	PIPE CULV, OPT MATL, ROUND, 60"S/CD	400.00	LF	$175.80	$70,320.00
550-10-220	FENCING, TYPE B, 5.1-6.0', STANDARD	1,860.00	LF	$10.26	$19,083.60
550-60-234	FENCE GATE,TYP B,SLIDE/CANT,18.1-20'OPEN	2.00	EA	$1,671.36	$3,342.72
570-1-1	PERFORMANCE TURF	24,200.00	SY	$0.54	$13,068.00

Retention Basin 4

Description	Value
Size	5 AC
Multiplier	1
Depth	4.00
Description	

Pay Items

Pay item	Description	Quantity	Unit	Unit Price	Extended Amount
110-1-1	CLEARING & GRUBBING	5.00	AC	$9,310.45	$46,552.25
120-1	REGULAR EXCAVATION	32,266.67	CY	$7.07	$228,125.36
400-2-2	CONC CLASS II, ENDWALLS	30.00	CY	$1,390.16	$41,704.80
425-1-541	INLETS, DT BOT, TYPE D, <10'	1.00	EA	$3,063.25	$3,063.25
425-2-71	MANHOLES, J-7, <10'	2.00	EA	$3,912.12	$7,824.24
430-175-142	PIPE CULV, OPT MATL, ROUND, 42"S/CD	56.00	LF	$90.22	$5,052.32
430-175-160	PIPE CULV, OPT MATL, ROUND, 60"S/CD	400.00	LF	$175.80	$70,320.00
550-10-220	FENCING, TYPE B, 5.1-6.0', STANDARD	1,860.00	LF	$10.26	$19,083.60
550-60-234	FENCE GATE,TYP	2.00	EA	$1,671.36	$3,342.72

570-1-1	B,SLIDE/CANT,18.1-20'OPEN PERFORMANCE TURF	24,200.00 SY	$0.54	$13,068.00
	Drainage Component Total			$3,511,021.54

SIGNING COMPONENT

Pay Items

Pay item	Description	Quantity	Unit	Unit Price	Extended Amount
700-20-11	SINGLE POST SIGN, F&I, LESS THAN 12 SF	9.00	AS	$277.85	$2,500.65
700-20-12	SINGLE POST SIGN, F&I, 12-20 SF	103.00	AS	$936.39	$96,448.17
700-21-11	MULTI- POST SIGN, F&I, 50 OR <	9.00	AS	$3,841.22	$34,570.98
700-21-12	MULTI- POST SIGN, F&I, 51-100	26.00	AS	$5,135.40	$133,520.40
	Signing Component Total				$267,040.20

LIGHTING COMPONENT

Rural Lighting Subcomponent

Description	Value
Multiplier (Number of Poles)	75

Pay Items

Pay item	Description	Quantity	Unit	Unit Price	Extended Amount
715-1-13	LIGHTING CONDUCTORS, F&I, INSUL, NO.4-2	45,000.00	LF	$2.13	$95,850.00
715-2-11	LIGHTING-CONDUIT, F&I, UNDERGROUND	15,000.00	LF	$3.82	$57,300.00
715-4-122	LIGHT POLE COMP, F&I, WS130, 45'	75.00	EA	$3,678.21	$275,865.75
715-14-11	LIGHTING - PULL BOX,F&I,ROADSIDE-MOULDED	75.00	EA	$414.51	$31,088.25
715-500-1	POLE CABLE DIST SYS, CONVENTIONAL	75.00	EA	$374.06	$28,054.50
	Subcomponent Total				$488,158.50
	Lighting Component Total				$488,158.50

BRIDGES COMPONENT

Bridge 000002

Description	Value
Estimate Type	SF Estimate
Primary Estimate	YES
Length (LF)	180.00
Width (LF)	99.13
Type	Low Level
Cost Factor	1.15
Structure No.	000002
Removal of Existing Structures area	0.00
Default Cost per SF	$110.00
Factored Cost per SF	$126.50
Final Cost per SF	**$132.42**

Basic Bridge Cost **$2,257,190.10**

Description CLEAR CREEK BRIDGE

Bridge Pay Items

Pay item	Description	Quantity Unit	Unit Price	Extended Amount
400-2-10	CONC CLASS II, APPROACH SLABS	220.29 CY	$325.14	$71,625.09
415-1-9	REINF STEEL- APPROACH SLABS	38,550.75 LB	$0.88	$33,924.66
	Bridge 000002 Total			$2,362,739.85
	Bridges Component Total			$2,362,739.85

Sequence 3 Total $16,298,108.29

Sequence: 4 NDU - New Construction, Divided, Urban **Net Length:** 0.486 MI 2,564 LF

Description: Urban Sections - STA 480+00 - STA 505+64

EARTHWORK COMPONENT

User Input Data

Description	Value
Standard Clearing and Grubbing Limits L/R	71.00 / 59.00
Incidental Clearing and Grubbing Area	0.00
Alignment Number	1
Distance	0.490
Top of Structural Course For Begin Section	102.50
Top of Structural Course For End Section	102.50
Horizontal Elevation For Begin Section	100.00
Horizontal Elevation For End Section	100.00
Front Slope L/R	2 to 1 / 3 to 1
Median Shoulder Cross Slope L/R	4.00 % / 4.00 %
Outside Shoulder Cross Slope L/R	2.00 % / 2.00 %
Roadway Cross Slope L/R	2.00 % / 2.00 %

Pay Items

Pay item	Description	Quantity Unit	Unit Price	Extended Amount
110-1-1	CLEARING & GRUBBING	7.66 AC	$9,310.45	$71,318.05
120-6	EMBANKMENT	18,627.84 CY	$3.96	$73,766.25
	Earthwork Component Total			$145,084.30

ROADWAY COMPONENT

User Input Data

Description	Value
Number of Lanes	4
Roadway Pavement Width L/R	28.00 / 28.00
Structural Spread Rate	330
Friction Course Spread Rate	165

Pay Items

Pay item	Description	Quantity Unit	Unit Price	Extended Amount
160-4	TYPE B STABILIZATION	18,893.60 SY	$2.67	$50,445.91
285-709	OPTIONAL BASE,BASE GROUP 09	15,953.58 SY	$22.63	$361,029.52
334-1-13	SUPERPAVE ASPHALTIC CONC, TRAFFIC C	2,632.34 TN	$86.58	$227,908.00
337-7-33	ASPH CONC FC,TRAFFIC C,FC-12.5,RUBBER	1,316.17 TN	$92.81	$122,153.74

X-Items

Pay item	Description	Quantity Unit	Unit Price	Extended Amount
710-11-160	PAINTED PAVT MARK,STD,WHITE,MESSAGE **Comment:** 2 applications for bike lanes	26.00 EA	$46.80	$1,216.80

Turnouts/Crossovers Subcomponent

Description	Value
Asphalt Adjustment	0.00
Stabilization Code	N
Base Code	N
Friction Course Code	N

Pavement Marking Subcomponent

Description	Value
Include Thermo/Tape/Other	N
Pavement Type	Asphalt
Solid Stripe No. of Paint Applications	2
Solid Stripe No. of Stripes	4
Skip Stripe No. of Paint Applications	2
Skip Stripe No. of Stripes	2

Pay Items

Pay item	Description	Quantity	Unit	Unit Price	Extended Amount
706-3	RETRO-REFLECTIVE PAVEMENT MARKERS	197.00	EA	$3.25	$640.25
710-11-111	PAINTED PAVT MARK,STD,WHITE,SOLID,6"	3.88	NM	$838.29	$3,252.57
710-11-131	PAINTED PAVT MARK,STD,WHITE,SKIP, 6"	1.94	GM	$282.04	$547.16
	Roadway Component Total				$767,193.95

SHOULDER COMPONENT

User Input Data

Description	Value
Total Outside Shoulder Width L/R	12.25 / 7.25
Total Outside Shoulder Perf. Turf Width L/R	10.00 / 5.00
Sidewalk Width L/R	0.00 / 0.00

Pay Items

Pay item	Description	Quantity	Unit	Unit Price	Extended Amount
520-1-10	CONCRETE CURB & GUTTER, TYPE F	2,563.97	LF	$11.57	$29,665.13
520-1-10	CONCRETE CURB & GUTTER, TYPE F	2,563.97	LF	$11.57	$29,665.13
570-1-1	PERFORMANCE TURF	4,273.28	SY	$0.54	$2,307.57

Erosion Control

Pay Items

Pay item	Description	Quantity	Unit	Unit Price	Extended Amount
104-10-3	SEDIMENT BARRIER	5,127.94	LF	$1.61	$8,255.98
104-11	FLOATING TURBIDITY BARRIER	121.40	LF	$9.47	$1,149.66
104-12	STAKED TURBIDITY BARRIER-NYL REINF PVC	121.40	LF	$5.44	$660.42
104-15	SOIL TRACKING PREVENTION	1.00	EA	$1,974.93	$1,974.93

	DEVICE			
104-18	INLET PROTECTION SYSTEM	25.00 EA	$109.72	$2,743.00
107-1	LITTER REMOVAL	12.36 AC	$26.79	$331.12
107-2	MOWING	12.36 AC	$59.57	$736.29
	Shoulder Component Total			$77,489.23

MEDIAN COMPONENT

User Input Data

Description	Value
Total Median Width	24.00
Performance Turf Width	19.50

Pay Items

Pay item	Description	Quantity	Unit	Unit Price	Extended Amount
520-1-7	CONCRETE CURB & GUTTER, TYPE E	5,127.94	LF	$12.01	$61,586.56
570-1-1	PERFORMANCE TURF	5,555.26	SY	$0.54	$2,999.84
	Median Component Total				$64,586.40

DRAINAGE COMPONENT

Pay Items

Pay item	Description	Quantity	Unit	Unit Price	Extended Amount
400-2-2	CONC CLASS II, ENDWALLS	8.74	CY	$1,390.16	$12,150.00
425-1-351	INLETS, CURB, TYPE P-5, <10'	18.00	EA	$2,997.62	$53,957.16
425-1-451	INLETS, CURB, TYPE J-5, <10'	5.00	EA	$4,747.89	$23,739.45
425-1-521	INLETS, DT BOT, TYPE C, <10'	3.00	EA	$2,042.97	$6,128.91
425-2-41	MANHOLES, P-7, <10'	3.00	EA	$2,438.41	$7,315.23
430-175-124	PIPE CULV, OPT MATL, ROUND, 24"S/CD	1,288.00	LF	$47.31	$60,935.28
430-175-136	PIPE CULV, OPT MATL, ROUND, 36"S/CD	120.00	LF	$70.38	$8,445.60
430-175-148	PIPE CULV, OPT MATL, ROUND, 48"S/CD	2,432.00	LF	$99.78	$242,664.96
570-1-1	PERFORMANCE TURF	147.62	SY	$0.54	$79.71

Box Culvert 1

Description	Value
Size	7 x 4
Length	150.00
Multiplier	1

Pay Items

Pay item	Description	Quantity	Unit	Unit Price	Extended Amount
400-4-1	CONC CLASS IV, CULVERTS	112.50	CY	$594.74	$66,908.25
415-1-1	REINF STEEL- ROADWAY	13,794.00	LB	$0.67	$9,241.98

Retention Basin 8

Description	Value
Size	2.5 AC
Multiplier	1
Depth	4.00
Description	

Pay Items

Pay item	Description	Quantity	Unit	Unit Price	Extended Amount
110-1-1	CLEARING & GRUBBING	2.50	AC	$9,310.45	$23,276.12
120-1	REGULAR EXCAVATION	16,133.33	CY	$7.07	$114,062.64
400-2-2	CONC CLASS II, ENDWALLS	18.00	CY	$1,390.16	$25,022.88
425-1-361	INLETS, CURB, TYPE P-6, <10'	1.00	EA	$3,479.15	$3,479.15
425-2-71	MANHOLES, J-7, <10'	1.00	EA	$3,912.12	$3,912.12
430-175-142	PIPE CULV, OPT MATL, ROUND, 42"S/CD	56.00	LF	$90.22	$5,052.32
430-175-160	PIPE CULV, OPT MATL, ROUND, 60"S/CD	200.00	LF	$175.80	$35,160.00
550-10-220	FENCING, TYPE B, 5.1-6.0', STANDARD	1,335.00	LF	$10.26	$13,697.10
550-60-234	FENCE GATE,TYP B,SLIDE/CANT,18.1-20'OPEN	1.00	EA	$1,671.36	$1,671.36
570-1-1	PERFORMANCE TURF	12,100.00	SY	$0.54	$6,534.00
	Drainage Component Total				$723,434.23

SIGNING COMPONENT

Pay Items

Pay item	Description	Quantity	Unit	Unit Price	Extended Amount
700-20-11	SINGLE POST SIGN, F&I, LESS THAN 12 SF	12.00	AS	$277.85	$3,334.20
700-20-12	SINGLE POST SIGN, F&I, 12-20 SF	1.00	AS	$936.39	$936.39
700-21-11	MULTI- POST SIGN, F&I, 50 OR <	1.00	AS	$3,841.22	$3,841.22
700-21-12	MULTI- POST SIGN, F&I, 51-100	1.00	AS	$5,135.40	$5,135.40
	Signing Component Total				$13,247.21

LIGHTING COMPONENT

Conventional Lighting Subcomponent

Description	Value
Spacing	MAX

Pay Items

Pay item	Description	Quantity	Unit	Unit Price	Extended Amount
715-1-13	LIGHTING CONDUCTORS, F&I, INSUL, NO.4-2	8,695.64	LF	$2.13	$18,521.71
715-2-11	LIGHTING-CONDUIT, F&I, UNDERGROUND	2,563.97	LF	$3.82	$9,794.37
715-2-12	LIGHTING-CONDUIT, F&I, UNDER EXIST PVMT	334.58	LF	$13.77	$4,607.17
715-14-11	LIGHTING - PULL	11.00	EA	$414.51	$4,559.61

715-500-1	BOX,F&I,ROADSIDE-MOULDED POLE CABLE DIST SYS, CONVENTIONAL	11.00 EA	$374.06	$4,114.66
715-511-140	LIGHT POLE COMP,F&I,SGL ARM SM, AL,40'	11.00 EA	$9,272.16	$101,993.76
	Subcomponent Total			$143,591.28
	Lighting Component Total			$143,591.28

Sequence 4 Total $1,934,626.60

Sequence: 5 NUR - New Construction, Undivided, Rural **Net Length:** 0.480 MI 2,534 LF

Description: Connecting SR 87N to SR87N leg. STA 505+64 - STA. 530+25

EARTHWORK COMPONENT

User Input Data

Description	Value
Standard Clearing and Grubbing Limits L/R	50.00 / 50.00
Incidental Clearing and Grubbing Area	0.00
Alignment Number	1
Distance	0.480
Top of Structural Course For Begin Section	105.00
Top of Structural Course For End Section	105.00
Horizontal Elevation For Begin Section	100.00
Horizontal Elevation For End Section	100.00
Front Slope L/R	6 to 1 / 6 to 1
Outside Shoulder Cross Slope L/R	6.00 % / 6.00 %
Roadway Cross Slope L/R	2.00 % / 2.00 %

Pay Items

Pay item	Description	Quantity	Unit	Unit Price	Extended Amount
110-1-1	CLEARING & GRUBBING	5.82	AC	$9,310.45	$54,186.82
120-6	EMBANKMENT	26,250.75	CY	$3.96	$103,952.97
	Earthwork Component Total				$158,139.79

ROADWAY COMPONENT

User Input Data

Description	Value
Number of Lanes	2
Roadway Pavement Width L/R	12.00 / 12.00
Structural Spread Rate	275
Friction Course Spread Rate	165

Pay Items

Pay item	Description	Quantity	Unit	Unit Price	Extended Amount
160-4	TYPE B STABILIZATION	12,387.82	SY	$2.67	$33,075.48
285-709	OPTIONAL BASE,BASE GROUP 09	6,942.81	SY	$22.63	$157,115.79
334-1-13	SUPERPAVE ASPHALTIC CONC, TRAFFIC C	929.09	TN	$86.58	$80,440.61
337-7-33	ASPH CONC FC,TRAFFIC C,FC-12.5,RUBBER	557.45	TN	$92.81	$51,736.93

Pavement Marking Subcomponent

Description	Value
Include Thermo/Tape/Other	N
Pavement Type	Asphalt
Solid Stripe No. of Paint Applications	2
Solid Stripe No. of Stripes	2
Skip Stripe No. of Paint Applications	2

Skip Stripe No. of Stripes 1

Pay Items

Pay item	Description	Quantity	Unit	Unit Price	Extended Amount
706-3	RETRO-REFLECTIVE PAVEMENT MARKERS	65.00	EA	$3.25	$211.25
710-11-111	PAINTED PAVT MARK,STD,WHITE,SOLID,6"	1.92	NM	$838.29	$1,609.52
710-11-131	PAINTED PAVT MARK,STD,WHITE,SKIP, 6"	0.96	GM	$282.04	$270.76
	Roadway Component Total				$324,460.34

SHOULDER COMPONENT

User Input Data

Description	Value
Total Outside Shoulder Width L/R	10.00 / 10.00
Total Outside Shoulder Perf. Turf Width L/R	2.67 / 2.67
Paved Outside Shoulder Width L/R	5.00 / 5.00
Structural Spread Rate	110
Friction Course Spread Rate	165
Total Width (T) / 8" Overlap (O)	T
Rumble Strips No. of Sides	0

Pay Items

Pay item	Description	Quantity	Unit	Unit Price	Extended Amount
285-704	OPTIONAL BASE,BASE GROUP 04	3,001.23	SY	$12.86	$38,595.82
334-1-13	SUPERPAVE ASPHALTIC CONC, TRAFFIC C	154.85	TN	$86.58	$13,406.91
337-7-33	ASPH CONC FC,TRAFFIC C,FC-12.5,RUBBER	232.27	TN	$92.81	$21,556.98
570-1-1	PERFORMANCE TURF	1,503.43	SY	$0.54	$811.85

Erosion Control

Pay Items

Pay item	Description	Quantity	Unit	Unit Price	Extended Amount
104-10-3	SEDIMENT BARRIER	6,588.07	LF	$1.61	$10,606.79
104-11	FLOATING TURBIDITY BARRIER	119.98	LF	$9.47	$1,136.21
104-12	STAKED TURBIDITY BARRIER-NYL REINF PVC	119.98	LF	$5.44	$652.69
104-15	SOIL TRACKING PREVENTION DEVICE	1.00	EA	$1,974.93	$1,974.93
107-1	LITTER REMOVAL	5.82	AC	$26.79	$155.92
107-2	MOWING	5.82	AC	$59.57	$346.70
	Shoulder Component Total				$89,244.80

DRAINAGE COMPONENT

Pay Items

Pay item	Description	Quantity	Unit	Unit Price	Extended Amount
400-2-2	CONC CLASS II, ENDWALLS	8.64	CY	$1,390.16	$12,010.98
430-174-124	PIPE CULV, OPT MATL, ROUND,24"SD	384.00	LF	$52.82	$20,282.88
430-175-136	PIPE CULV, OPT MATL, ROUND, 36"S/CD	80.00	LF	$70.38	$5,630.40
430-984-129	MITERED END SECT, OPTIONAL RD, 24" SD	20.00	EA	$952.07	$19,041.40
570-1-1	PERFORMANCE TURF	337.85	SY	$0.54	$182.44
	Drainage Component Total				$57,148.10

SIGNING COMPONENT

Pay Items

Pay item	Description	Quantity	Unit	Unit Price	Extended Amount
700-20-11	SINGLE POST SIGN, F&I, LESS THAN 12 SF	1.00	AS	$277.85	$277.85
700-20-12	SINGLE POST SIGN, F&I, 12-20 SF	10.00	AS	$936.39	$9,363.90
700-21-11	MULTI- POST SIGN, F&I, 50 OR <	1.00	AS	$3,841.22	$3,841.22
	Signing Component Total				$13,482.97

Sequence 5 Total $642,476.00

Date: 2/22/2013 3:16:04 PM

FDOT Long Range Estimating System - Production

R3: Project Details by Sequence Report

Project: 416748-3-22-02 **Letting Date:** 01/2099

Description: SR 87S / SR 87N CONNECTOR NEW ALIGNMENT

District: 03 **County:** 58 SANTA ROSA **Market Area:** 01 **Units:** English
Contract Class: 1 **Lump Sum Project:** N **Design/Build:** N **Project Length:** 7.910 MI

Project Manager: PEGGY KELLEY

Version 13 Project Grand Total **$120,409,699.67**
Description: Alignment 2 with VE recommendations - 2-22-13

Project Sequences Subtotal			**$99,388,181.55**
102-1	Maintenance of Traffic	10.00 %	$9,938,818.15
101-1	Mobilization	10.00 %	$10,932,699.97
Project Sequences Total			**$120,259,699.67**
Project Unknowns		0.00 %	$0.00
Design/Build		0.00 %	$0.00

Non-Bid Components:

Pay item	Description	Quantity	Unit	Unit Price	Extended Amount
999-25	INITIAL CONTINGENCY AMOUNT (DO NOT BID)		LS	$150,000.00	$150,000.00
Project Non-Bid Subtotal					**$150,000.00**
Version 13 Project Grand Total					**$120,409,699.67**

Appendix I: Right-of-Way Cost Estimate

Value Engineering Alternate 1 - SR 87 - Santa Rosa County

Parcel Reference No.	Owner Name	Parcel I.D. No.	Area of Parent Tract		Area of Taking			$/SF of Land	
1a-2 ***	Santa Rosa County	32-2N-27-0000-00100-0000	126.85	AC	572935	SF	13.15 AC	$1.15	/SF
1a-3	Pro-Build Real Estate Holdings	32-2N-27-0000-00108-0000	14.00	AC	14964	SF	0.34 AC	$1.15	/SF
1a-4	Gast, Thomas J.	32-2N-27-0000-00106-0000	10.00	AC	827	SF	0.02 AC	$1.15	/SF
1a-5 *** ** (Pond 1-3)	Santa Rosa County	29-2N-27-0000-00101-0000	113.32	AC	294445	SF	6.76 AC	$1.15	/SF
1a-6 ***	City of Milton	29-2N-27-0000-00103-0000	24.86	AC	89418	SF	2.05 AC	$1.15	/SF
1a-7 *** ** (Pond 1-5)	Santa Rosa County	29-2N-27-0000-00100-0000	302.25	AC	247038	SF	5.67 AC	$1.15	/SF
1a-8 ***	Santa Rosa County	30-2N-27-0000-00100-0000	280.00	AC	609299	SF	13.99 AC	$1.15	/SF
1a-9	Owen, W.P. & B.L.	19-2N-27-0000-00800-0000	90.00	AC	223558	SF	5.13 AC	$0.05	/SF
1a-10	Matthews, C.A. & E.E.	19-2N-27-0000-00700-0000	34.00	AC	73677	SF	1.69 AC	$0.05	/SF
1a-11	Brown, P.	19-2N-27-0000-00400-0000	20.00	AC	154405	SF	3.54 AC	$0.35	/SF
1a-12	Blocker, F. & N.L.	19-2N-27-0000-00500-0000	37.26	AC	113139	SF	2.60 AC	$0.35	/SF
1a-13	Brown, M.	19-2N-27-0000-00200-0000	67.59	AC	254201	SF	5.84 AC	$0.12	/SF
1b-1 ** (Pond 3-3)	Elliot, H.J., et. al.	19-2N-27-0000-00100-0000	240.00	AC	836997	SF	19.21 AC	$0.12	/SF
1b-2 ***	TIITF	10-1N-28-0000-02900-0000	100.00	AC	21936	SF	0.50 AC	$0.12	/SF
1b-3	Long, H.L. & A., Trust	24-2N-28-0000-01300-0000	66.00	AC	632205	SF	14.51 AC	$0.23	/SF
1b-3 (2)	Long, Mildred	24-2N-28-0000-02400-0000	59.08	AC	5802	SF	0.13 AC	$0.23	/SF
1b-4 ** (Pond 4-4)	Findley, C.K. & L.B.	24-2N-28-0000-01400-0000	10.01	AC	308878	SF	7.09 AC	$0.35	/SF
1b-5	Long, H.L. & A., Trust	24-2N-28-0000-02500-0000	36.09	AC	125946	SF	2.89 AC	$0.35	/SF
1b-6	Guillory, D. J., Sr.	24-2N-28-0000-01503-0000 24-2N-28-0000-01510-0000 24-2N-28-0000-01511-0000 24-2N-28-0000-01512-0000	10.30	AC	218694	SF	5.02 AC	$0.35	/SF
1b-6(2) * (Pond 5-1)	Peterson, J.M. & D.K.	24-2N-28-0000-01501-0000	10.00	AC	206132	SF	4.73 AC	$0.35	/SF
1b-7	Brown, W.F. & J.F.	24-2N-28-0000-02900-0000	20.06	AC	157418	SF	3.61 AC	$0.35	/SF
1b-8	Emerald Coast Land Co.	24-2N-28-0000-02902-0000	5.00	AC	150861	SF	3.46 AC	$0.46	/SF
1c-1 ** (Pond 6-1)	Rollo, W.R. & G.R.	23-2N-28-0000-00200-0000 23-2N-28-0000-00700-0000 23-2N-28-0000-00701-0000 23-2N-28-0000-00127-0000	505.00	AC	1359588	SF	31.21 AC	$0.12	/SF
1c-2	Sparr, D. A.	22-2N-28-0000-00100-0000	48.40	AC	229151	SF	5.26 AC	$0.35	/SF
1c-3 ** (Pond 7-4)	Gulf Coast Community Bank	22-2N-28-0000-00200-0000 22-2N-28-0000-00201-0000	80.00	AC	396338	SF	9.10 AC	$0.12	/SF
1c-4 ** (Pond 7-1)	Baxley, T.A. & M.H., Trustees	22-2N-28-0000-00300-0000	156.00	AC	538456	SF	12.36 AC	$0.12	/SF
1c-5	Cook, S. & B.	21-2N-28-0000-00104-0000	25.00	AC	83764	SF	1.92 AC	$0.35	/SF
1c-6	Manning, C.E.	21-2N-28-0000-00107-0000	11.33	AC	36055	SF	0.83 AC	$0.35	/SF
1c-7	Nix, J.C. & J.C.	21-2N-28-0000-00103-0000	13.37	AC	48725	SF	1.12 AC	$0.35	/SF
1c-8	Silcox, B.G. & L.C.	21-2N-28-0000-00115-0000	11.00	AC	43868	SF	1.01 AC	$0.35	/SF
1c-9	P & S Construction	21-2N-28-0000-00114-0000	4.14	AC	24055	SF	0.55 AC	$0.46	/SF
1c-10	Davis, S.M & C.A.	21-2N-28-0000-00109-0000	3.39	AC	21689	SF	0.50 AC	$0.46	/SF
1c-11 ** (Pond 8-2)	Green, P.R.	21-2N-28-0000-00400-0000	30.00	AC	194425	SF	4.46 AC	$0.35	/SF
1c-12	Needles, A.	21-2N-28-1270-00200-0060	0.508	AC	8367	SF	0.19 AC	$2.00	/SF
1c-13	Gorum, C. C., Jr.	21-2N-28-1270-00200-0070	0.964	AC	3265	SF	0.07 AC	$0.60	/SF
					8300521	SF	190.55 AC	$0.51	
								Average $/SF	

* Pond Only Taking

** Pond & R/W Taking

*** Public-Owned, no cost

PARCEL TYPE SUMMARY

Project Number: SR 87 **Date:** 8-Mar-13
County: Santa Rosa
Description: VE Alternate 1
Number of Parcels: 35

Parcel Number	Land Use	Category
1a-2	County	Public
1a-3	Industrial	Industrial-Vacant
1a-4	Industrial	Industrial-Improved
1a-5	County	Public
1a-6	City of Milton	Public
1a-7	County	Public
1a-8	County	Public
1a-9	Timberland	Agriculture
1a-10	Timberland	Agriculture
1a-11	Timberland	Agriculture
1a-12	Timberland w/SFR	Agriculture
1a-13	Timberland-SFR	Agriculture
1b-1	Timberland	Agriculture
1b-2	Forest-Park - Trail	Public
1b-3	Timberland	Agriculture
1b-3 (2)	Timberland	Agriculture
1b-4	Timberland	Agriculture
1b-5	Timberland-SFR	Agriculture
1b-6	Imp w/ 2 MH & SFR	Residential-Improved
1b-6 (2)	Vacant-Residential	Residential-Vacant
1b-7	Cropland w/SFR	Residential-Improved
1b-8	Vacant-Residential	Residential-Vacant
1c-1	Timberland	Agriculture
1c-2	Timberland	Agriculture
1c-3	Non-Ag Acreage - Timberla	Residential-Vacant
1c-4	Non-Ag Acreage - Timberla	Residential-Vacant
1c-5	Pasture -SFR	Agriculture
1c-6	Cropland-SFR - Timberlan	Agriculture
1c-7	SFR-Acreage	Residential-Improved
1c-8	SFR-Sawmill	Residential-Improved
1c-9	Vacant-SFR - Clay Mine	Residential-Vacant
1c-10	SFR/Commercial - Auto Ju	Residential-Improved
1c-11	Cropland - Cleared - Timbe	Agriculture
1c-12	Vacant Commercial	Commercial-Vacant
1c-13	SFR	Residential-Improved

Category Subtotals

Public	6
Agriculture	15
Residential-Vacant	5
Residential-Improved	6
Industrial-Vacant	1
Industrial-Improved	1
Commercial-Vacant	1
Commercial-Improved	0
Total Parcels	35

Cost Estimate Summary

Project Number:	SR 87	**Date:**	3/8/2013
County:	Santa Rosa		
Description:	VE Alternate 1		
Number of Parcels:	35		

Direct Labor Costs:		$220,000
Right of Way Land Costs		
Land	$1,429,000	
Improvements	$34,900	
Damages	$554,640	
ODA's	$0	
Total		$2,018,540
Business Damages	$220,000	
Administrative Settlements	$605,562	
Litigation Awards	$605,562	
Owner Appraisal Fees	$388,750	
Owner CPA Fees	$60,000	
Defendant Attorney Fees	$403,708	
Other Condemnation Costs	$302,781	
Other Costs (With No Factors)	$0	
Total		$2,586,363
Relocation Costs		
Replacement Housing Costs:		
Owner	$30,000	
Move Costs:		
Residential	$12,500	
Non-Residential	$0	
Landlord	$0	
Total		$42,500
Right of Way Operations		
Appraisal Fees	$155,500	
Business Damage CPA Fees	$24,000	
Court Reporter and Witness Fees	$201,854	
Demolition Contracts	$15,000	
Move Cost Estimates Fees	$0	
Attorney Fees (Outside Counsel)	$6,000	
Title Search	$0	
Hazardous Waste Investigations	$8,000	$410,354
Total		
Total Cost Estimate		**$5,057,757**

Cost Estimate Summary

Project Number:	SR 87	**Date:**	11/4/2012
County:	Santa Rosa		
Description:	Alternate 2		
Number of Parcels:	38		

Direct Labor Costs:		$220,000
Right of Way Land Costs		
Land	$1,883,000	
Improvements	$27,200	
Damages	$470,940	
ODA's	$0	
Total		$2,381,140
Business Damages	$80,000	
Administrative Settlements	$714,342	
Litigation Awards	$714,342	
Owner Appraisal Fees	$386,250	
Owner CPA Fees	$30,000	
Defendant Attorney Fees	$476,228	
Other Condemnation Costs	$357,171	
Other Costs (With No Factors)	$0	
Total		$2,758,333
Relocation Costs		
Replacement Housing Costs:		
Owner	$30,000	
Move Costs:		
Residential	$12,500	
Non-Residential	$0	
Landlord	$0	
Total		$42,500
Right of Way Operations		
Appraisal Fees	$154,500	
Business Damage CPA Fees	$12,000	
Court Reporter and Witness Fees	$238,114	
Demolition Contracts	$15,000	
Move Cost Estimates Fees	$0	
Attorney Fees (Outside Counsel)	$6,000	
Title Search	$0	
Hazardous Waste Investigations	$8,000	$433,614
Total		
Total Cost Estimate		**$5,615,587**

PARCEL TYPE SUMMARY

Project Number: SR 87 **Date:** 4-Nov-12
County: Santa Rosa
Description: Alternate 2
Number of Parcels: 38

Parcel Number	Land Use	Category
1a-2	County	Public
1a-3	Industrial	Industrial-Vacant
1a-4	Industrial	Industrial-Improved
1a-5	County	Public
1a-6	City of Milton	Public
1a-7	County	Public
1a-8	County	Public
1a-9	Timberland	Agriculture
1a-10	Timberland	Agriculture
1a-11	Timberland	Agriculture
1a-12	Timberland w/SFR	Agriculture
1a-13	Timberland-SFR	Agriculture
1b-1	Timberland	Agriculture
1b-2	Forest-Park - Trail	Public
1b-3	Timberland	Agriculture
1b-3 (2)	Timberland	Agriculture
1b-4	Timberlanc	Agriculture
1b-5	Timberland-SFR	Agriculture
1b-6	Imp w/ 2 MH & SFR	Residential-Improved
1b-6 (2)	Vacant-Residential	Residential-Vacant
1b-7	Cropland w/SFR	Residential-Improved
1b-8	Vacant-Residential	Residential-Vacant
2a-1	Timberland	Agriculture
2a-2	Timberland	Agriculture
2a-3	Timberland	Residential-Vacant
2a-4	Timberland-MH	Residential-Improved
2a-5	Timberland	Agriculture
2a-6	County	Public
2a-7	County	Public
2a-8	Timberland	Residential-Vacant
2a-9	Non-Ag Acreage	Residential-Vacant
2a-13	SFR-Timberland	Residential-Improved
2a-14	SFR-MH	Residential-Improved
2a-15	Vacant Comm/Res	Commercial-Vacant
2a-16	SFR	Residential-Improved
2a-17	Non-AG acreage	Residential-Vacant
2a-18	Vacant-SFR	Residential-Vacant
2a-19	SFR	Residential-Improved

Category Subtotals

Public	8
Agriculture	13
Residential-Vacant	7
Residential-Improved	7
Industrial-Vacant	1
Industrial-Improved	1
Commercial-Vacant	1
Commercial-Improved	0
Total Parcels	38

Alternate 1 - SR 87 - Santa Rosa County

Parcel Reference No.	Owner Name	Parcel I.D. No.	Area of Parent Tract	Area of Taking	
1a-2	Santa Rosa County	32-2N-27-0000-00100-0000	126.85 AC	459568 SF	10.55 AC
1a-3	Pro-Build Real Estate Holdings	32-2N-27-0000-00108-0000	14.00 AC	30944 SF	0.71 AC
1a-4	Gast, Thomas J.	32-2N-27-0000-00106-0000	10.00 AC	3707 SF	0.09 AC
1a-5	Santa Rosa County	29-2N-27-0000-00101-0000	113.32 AC	601909 SF	13.82 AC
1a-6	City of Milton	29-2N-27-0000-00103-0000	24.86 AC	97548 SF	2.24 AC
1a-7	Santa Rosa County	29-2N-27-0000-00100-0000	302.25 AC	263691 SF	6.05 AC
1a-8	Santa Rosa County	30-2N-27-0000-00100-0000	280.00 AC	624766 SF	14.34 AC
1a-9	Owen, W.P. & B.L.	19-2N-27-0000-00800-0000	90.00 AC	219711 SF	5.04 AC
1a-10	Matthews, C.A. & E.E.	19-2N-27-0000-00700-0000	34.00 AC	77857 SF	1.79 AC
1a-11	Brown, P.	19-2N-27-0000-00400-0000	20.00 AC	151609 SF	3.48 AC
1a-12	Blocker, F. & N.L.	19-2N-27-0000-00500-0000	37.26 AC	114856 SF	2.64 AC
1a-13	Brown, M.	19-2N-27-0000-00200-0000	67.59 AC	277652 SF	6.37 AC
1b-1	Elliot, H.J., et. al.	19-2N-27-0000-00100-0000	240.00 AC	806852 SF	18.52 AC
1b-2	TIITF	10-1N-28-0000-02900-0000	100.00 AC	24448 SF	0.56 AC
1b-3	Long, H.L. & A., Trust	24-2N-28-0000-01300-0000	66.00 AC	576060 SF	13.22 AC
1b-3 (2)	Long, Mildred	24-2N-28-0000-02400-0000	59.08 AC	5093 SF	0.12 AC
1b-4	Findley, C.K. & L.B.	24-2N-28-0000-01400-0000	10.01 AC	320514 SF	7.36 AC
1b-5	Long, H.L. & A., Trust	24-2N-28-0000-02500-0000	36.09 AC	128812 SF	2.96 AC
1b-6	Guillory, D. J., Sr.	24-2N-28-0000-01503-0000 24-2N-28-0000-01510-0000 24-2N-28-0000-01511-0000 24-2N-28-0000-01512-0000	10.30 AC	209182 SF	4.80 AC
1b-6(2)	Peterson, J.M. & D.K.	24-2N-28-0000-01501-0000	10.00 AC	206132 SF	4.73 AC
1b-7	Brown, W.F. & J.F.	24-2N-28-0000-02900-0000	20.06 AC	133142 SF	3.06 AC
1b-8	Emerald Coast Land Co.	24-2N-28-0000-02902-0000	5.00 AC	126198 SF	2.90 AC
2a-1	Rollo, W.R. & G.R.	23-2N-28-0000-00200-0000 23-2N-28-0000-00700-0000 23-2N-28-0000-00701-0000 23-2N-28-0000-00127-0000	505.00 AC	1161653 SF	26.67 AC
2a-2	Maray Enterprises, LLC	14-2N-28-0000-00200-0000	420.78 AC	827940 SF	19.01 AC
2a-3	Canter, M.F. & J.	14-2N-28-0000-00300-0000	20.00 AC	116609 SF	2.68 AC

2a-4	Jarratt, J.N.	14-2N-28-0000-00303-0000	20.00 AC	119830 SF	2.75 AC
2a-5	Patterson, W.D.	14-2N-28-0000-00302-0000	20.00 AC	21050 SF	0.48 AC
2a-6	Santa Rosa County	14-2N-28-0000-00301-0000	20.00 AC	44198 SF	1.01 AC
2a-7	Santa Rosa County	15-2N-28-0000-00301-0000 10-2N-28-0000-00100-0000	181.25 AC	311861 SF	7.16 AC
2a-8	Rosasco, A.M., Trustee	10-2N-28-0000-00400-0000	160.00 AC	263206 SF	6.04 AC
2a-9	Skivans Creek, LLC	09-2N-28-0000-00900-0000 09-2N-28-0000-00902-0000 10-2N-28-0000-00602-0000 10-2N-28-0000-00601-0000 10-2N-28-0000-00600-0000	226.57 AC	1031451 SF	23.68 AC
2a-13	Brown, N.E.	09-2N-28-0000-00140-0000	9.78 AC	61518 SF	1.41 AC
2a-14	Jones, L.	09-2N-28-0000-00201-0000	2.01 AC	21135 SF	0.49 AC
2a-15	Dewrell, J.L.	09-2N-28-0000-00700-0000 09-2N-28-0000-00302-0000 09-2N-28-0000-00142-0000 09-2N-28-0000-00601-0000 09-2N-28-0000-00600-0000	23.09 AC	82755 SF	1.90 AC
2a-16	Hoodless, C.	09-2N-28-0000-00180-0000	2.07 AC	20212 SF	0.46 AC
2a-17	Palmer, T.	09-2N-28-0000-00135-0000	105.41 AC	4378 SF	0.10 AC
2a-18	Smith, J.S. & M.S.	09-2N-28-0000-00143-0000	5.00 AC	12231 SF	0.28 AC
2a-19	Ciecko, R. & K.	09-2N-28-0000-00144-0000	5.01 AC	325 SF	0.01 AC

Appendix J: Public Involvement Information

SR 87 Connector PD&E Study

Public Involvement Plan

Financial Project Nos:
416748-3-22-01, 416748-3-22-02,
416748-4-22-01, and 416748-4-22-02

This project's study area extends from the intersection of SR 87S and Bent Tree Rd, westward to the intersection of US 90/SR10 and Glover Lane, and northwardly to the intersection of SR 87N and Southridge Drive.

Santa Rosa County, Florida

August 6, 2009

Prepared for:
The Florida Department of Transportation, District Three

State Road 87
Project Development and Environment Study
From the Intersection of SR 87S and Bent Tree Rd, westward to the Intersection of US 90 / SR 10 and Glover Lane, and northwardly to the Intersection of SR 87N and Southridge Rd
Santa Rosa County, Florida

In accordance with Part 1, Chapter 11 of the Florida Department of Transportation Project Development and Environment Guidelines, this Public Involvement program is submitted to the Florida Department of Transportation Office of Planning and Environmental Management for review and approval.

Submitted By: _____ Date: 8/07/2009
John Flora, RA, AICP
Metric Engineering, Inc.

Approved By: _____ Date: 8/11/2009
Peggy Kelley
FDOT Project Manger

Approved By: _____ Date: 8/13/09
Blair Martin, PE
Environmental Management Office

Table of Contents

		Page
I.	DESCRIPTION OF THE PROPOSED IMPROVEMENT	1
1.1	Project History, Purpose and Need	2
1.2	Project Limits	3
1.3	PD&E Process	3
II.	IDENTIFICATION OF CONCERNED PUBLIC	4
2.1	Local Elected and Appointed Officials	4
2.2	Federal, State and Local Agencies	5
2.3	Concerned Citizens and Property Owners	6
2.4	Media	6
III.	PUBLIC NOTIFICATION	7
IV.	PUBLIC MEETINGS	9
V.	COORDINATION WITH SANTA ROSA COUNTY	10
VI.	PUBLIC HEARING	11
VII.	PUBLIC HEARING FOLLOW-UP	12

State Road 87
Project Development and Environment Study
From the Intersection of SR 87S and Bent Tree Rd, westward to the Intersection of US 90 / SR 10 and Glover Lane, and northwardly to the Intersection of SR 87N and Southridge Rd
Santa Rosa County, Florida

The Florida Department of Transportation (FDOT) recognizes that the success of any transportation improvement is dependent upon a successful public outreach effort. As such, FDOT is committed to conducting a public involvement program that focuses on soliciting community interaction and incorporates an extensive evaluation of community impacts and opinions throughout the public involvement process. It is believed that the positive value of implementing a strong public involvement effort will result in public awareness of, and support for, the project.

The Public Involvement Plan will be updated and amended throughout the project development process to incorporate the latest public involvement policies and techniques as they evolve during the life of the project. The plan illustrates the project's public involvement approach and generally lists the contact persons: officials, agencies, interested parties, and media; as well as the means used to involve them in the process. The Department will prepare responses to the public inquiries as a result of the public involvement efforts and the collection of public input will occur throughout the project duration.

The Public Involvement Plan for the State Road (SR) 87 Project Development and Environment (PD&E) Study is in compliance with the PD&E Guidelines, Florida Statutes (F.S.) Sections 286.0105 and 286.011 and 339.155, Executive Orders 11990 and 11988, Council of Environmental Quality (CEQ) Regulations for Implementing the Procedural Provisions of the National Environmental Policy Act (NEPA), the Efficient Transportation Decision Making (ETDM Planning and Programming) Manual and Department of Transportation Order 5610.1C, and Parts 23 and 40 of the Code of Federal Regulations (CFR).

I. DESCRIPTION OF THE PROPOSED IMPROVEMENT

Project Name	SR 87 Connector Project Development and Environment Study
FPID	416748-3-22-01, 416748-3-22-02, 416748-4-22-01 and 416748-4-22-02
Project Limits	The project limits include the intersection of SR 87S and Bent Tree Rd, westward to the intersection of US 90 / SR 10 and Glover Lane, and northwardly to the intersection of SR 87N and Southridge Dr
Proposed Activity	The general objective of this PD&E Study is to provide and document information necessary for the FDOT to reach a decision on the type, design and location of improvements for the SR 87 Connector.

The study will consider those engineering services required for location/design studies including consideration of all social, economic, environmental effects, and mitigation as required by the Federal Highway Administration (FHWA) and/or the PD&E\ETDM Guidelines, along with the required environmental documents, engineering, reports, preliminary plans and public involvement.

All alternatives will be subjected to a comprehensive evaluation to determine the best viable option. Engineering, environmental, socioeconomic factors and costs will be considered in arriving at a preferred alternative. The approach to this project will be to thoroughly assess the safety, mobility and community needs of the corridor, develop alternatives to address those needs, and evaluate them according to regulatory agency requirements, and community values. As part of this study and of the alternative selection process, a comprehensive public involvement program will be conducted.

Class of Action: To Be Determined

1.1 Project History, Purpose and Need:

Presently, SR 87 is the main north-south artery of Santa Rosa County. It links Milton at US 90 with US 98 in Navarre to the south and Alabama (transitions to Alabama 41 en route to Brewton then on to I-65) to the north. It also serves as a corridor for freight movement north to I-65 as well as a vital evacuation route for northbound traffic. During times of hurricane force winds, both the Escambia Bay Bridge and the Garcon Point Bridge close, leaving SR 87 north to the interstate and beyond not only the single access out of the beach areas like Gulf Breeze and Navarre, but it is the only access into the area for Emergency First Responders.

However, with a portion of the current alignment traveling along a congested section of US 90 through historic downtown Milton, it cannot function as a contiguous roadway. Future growth will continue to constrain this portion of the corridor. Santa Rosa County has grown 173% since 1980 and is expected to grow another 92% by 2030. This increase will put further demand on this roadway, making growth and evacuation difficult due to a lack of capacity on US 90. As a result, Santa Rosa County's Capital Improvements Schedule includes Policy 4.1.E.3, *"The County shall continue to request, recommend, and support immediate roadway improvements in order to relieve the congestion on the segment of US 90 between Canal Street and SR 87S".*

The primary objectives in the extension of SR 87S is to facilitate a more effective freight movement and hurricane evacuation route from the coast, reduce congestion in the City of Milton, and to alleviate travel demand on US 90. This study will focus on addressing transportation needs as it relates to:

- Improving mobility,
- Relieving traffic congestion and improving traffic circulation,
- Improving upon the areas pedestrian and bicycle connectivity,
- Providing efficient access to/from the beach (SR 87 is also an important Hurricane Evacuation Route), and
- Providing for and ensuring public safety, while protecting the environment.

1.2 Project Limits

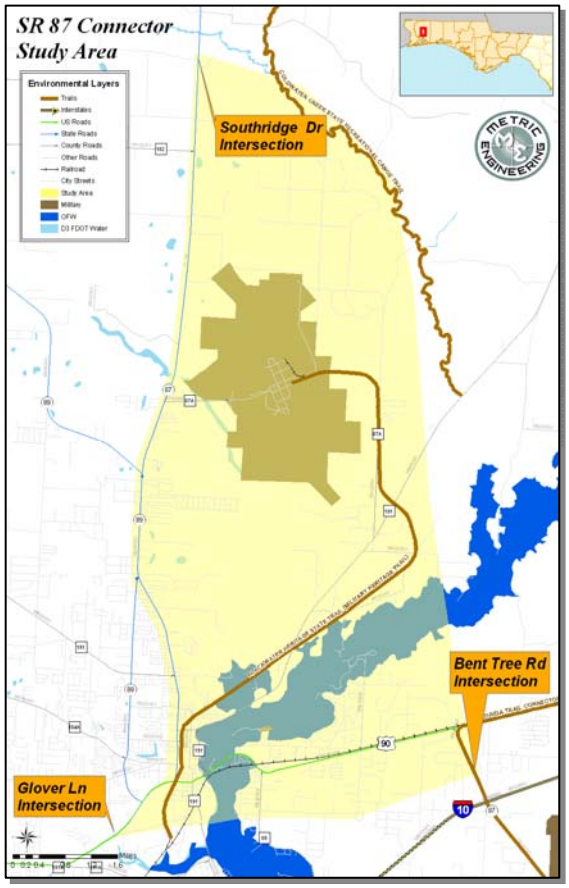

This project lies in the eastern and central portion of Santa Rosa County. To provide for additional capacity and connectivity, up to four roadway corridors will be evaluated, including the existing corridor (to the left of, to the right of, and "best fit") along US 90 and SR 87N. A second corridor will be evaluated from 87S to 87N, north of NAS Whiting Field and a third corridor will be evaluated from 87S to 87N, south of NAS Whiting Field. The fourth corridor will extend from the intersection of SR 87S and Bent Tree Rd to the intersection of US 90/ SR 10 and Glover Lane. This corridor will be south of US 90, but will include a connection to SR 87N or SR 89 at US 90. The study will also evaluate possible intersection improvements and multi-modal solutions that are needed to address the aforementioned existing corridor deficiencies.

1.3 PD&E Process

The PD&E Study process is an integrated work effort involving engineering analysis and environmental evaluation, all accomplished within the context of a public participation program. The study process begins with a gathering of data and a refinement of the project needs and objectives. Public involvement during this phase of the study includes introductory briefings with elected officials with the distribution of a project fact sheet/newsletter, notification to key stakeholders, news releases to the media, and a series of public meetings to engage and collect feedback from the public. The project will first need to go through ETDM screening to expand the area that was evaluated in the Project # 2861 Screening Report published on February 19, 2008. Although both SR 87N (to Langley Street) and SR 87S are four or five-lane facilities, the traffic demand modeling for this project will determine the need for a four-lane facility, or a two-lane facility that would be phased into a four-lane facility. In any event, the study will evaluate corridors and alignments that could accommodate a four-lane facility. The goal of this project is to develop a proposed improvement strategy that is technically sound, environmentally sensitive and publicly acceptable. It is very important that FDOT gather consensus on improvements and needs of the corridor. The involvement of the community's stakeholders will demonstrate to the community FDOT's willingness to truly enhance traffic operations and safety on the corridor. These improvements are necessary to alleviate the traffic congestion during high traffic periods and to provide the public with a safer, more efficient roadway facility. The general content of this study is briefly described below.

- *Public Participation – The public participation effort is woven throughout the study process and involves a series of public meetings and a continuing process of public outreach and information gathering. Public participation techniques are discussed more thoroughly in the subsequent sections.*
- *Data Assembly – This process will involve assembly of all relevant roadway data, completion of R/W survey, collection of traffic data and completion of the environmental field survey effort.*

• Conceptual Design Analysis – This work effort will include analysis of different improvement configurations.
• Engineering Analysis and Concept Plans – All preliminary engineering analysis requirements are completed and a conceptual set of project plans is prepared.
• Environmental Analysis and Reports – All environmental impact analysis and associated memos or reports are prepared in draft form.
• Comparative Analysis – A comparative analysis matrix is prepared assessing the benefits and impacts associated with the no-build alternative, the Transportation System Management alternative and the build alternatives.
• Draft Reports – A Draft Preliminary Engineering Report (PER) and draft environmental documents will be assembled in preparation for the final public hearing.
• Final Documents – The PER and the appropriate environmental documents are finalized following the public hearing.

II. IDENTIFICATION OF CONCERNED PUBLIC

Need for improvements are based on a combination of substandard traffic conditions, local government planning objectives and the interaction with other planned facility improvements impacting the proposed project area. Project goals include the study of the following issues: increase capacity to prevent existing and future traffic congestion, improve safety by alleviating existing deficiencies, explore access issues and establish proper continuity. The primary objectives in the extension of SR 87 is to facilitate a more effective freight movement and hurricane evacuation route from the coast, reduce congestion in the City of Milton, and to alleviate travel demand on US 90.

2.1 Local Elected and Appointed Officials

Meetings with local and state elected officials are necessary to discuss particular issues and explain study procedure. Key elected officials, including the City of Milton and Santa Rosa County Commissioners, will be given the option for one-on-one briefings at the beginning of the project. Federal and state officials will be sent a letter giving them an opportunity to request a briefing. All elected officials and appointed officials will be encouraged to attend all public meetings and hearing. Lists will be updated throughout the life of the project to reflect any changes in elected officials. New officials will be sent a notification letter and be given an opportunity to request a briefing.

<u>Local elected and appointed officials:</u>
<u>Federal Delegation</u>

- United States Senate
  - Senator Mel Martinez
  - Senator Bill Nelson
- United States House of Representatives
  - Congressman Jeff Miller

<u>State Delegation</u>

- Florida Senate
  - Senator Don Gaetz
  - Senator Durrell Peaden, Jr.
- Florida House of Representatives
  - Representative Greg Evers

Santa Rosa County

- Commissioner Jim Willamson, District 1
- Commissioner Bob Cole, District 2
- Commissioner Don Salter, District 3
- Commissioner Gordon Goodin, District 4
- Commissioner Lane Lynchard, District 5
- Santa Rosa County Administrator, Hunter Walker
- Santa Rosa County Engineering Department, Roger Blaylock, PE
- Santa Rosa County Planning Director, Beckie Faulkenberry Cato
- Santa Rosa County Sheriff's Department, Wendell Hall
- Santa Rosa County School Board Superintendent, Tim Wyrosdick

City of Milton

- Mayor Guy Thompson
- Councilmember Paul Kilmartin, Ward I
- Councilmember Buddy Jordan, Ward I
- Councilmember Clayton White, Ward II
- Councilmember Patsy Lunsford, Ward II
- Councilmember Marilyn Jones, Ward III
- Councilmember Grady Hester, Ward III
- Councilmember Lloyd Hinote, Ward IV
- Councilmember R.L. Lewis, Ward IV
- City Clerk Dewitt Nobles
- City Manager Brian Watkins
- Chief of Police Gregory Brand
- City Planner Randy Jorgenson, AICP

2.2 Federal, State and Local Agencies

The following federal, regional, state or local agencies having a concern in this project because of jurisdictional review or because of expressed interest have been identified and will be contacted directly by FDOT through the Advance Notification coordination process at the outset of the project in accordance with Part 1, Chapter 3 of the PD&E Manual. These agencies provide valuable input with regard to project implementation and consistency with local, regional, and state goals, objectives and policies. As other concerned public agencies are identified throughout the study, they will also be listed and contacted. A preliminary list is included in the Plan. Early and continued coordination with the affected agencies will provide valuable input into the project development process.

Federal:

- Federal Highway Administration, Division Administrator, David Gibbs
- US Environmental Protection Agency, Director
- US Fish and Wildlife Service, Director
- US Army Corp of Engineers, Director
- Federal Emergency Management Agency, Director
- Federal Aviation Administration, Director
- Federal Railroad Administration, Director

- US Department of Interior, Director
- US Department of Housing and Urban Development, Director
- US Department of Interior – US Geological Survey, Director
- US Department of Commerce – National Marine Fisheries, Director
- US Department of Agriculture - Southern Region
- US Department of Interior – National Park Service
- US Department of Commerce – National Oceanic and Atmospheric Administration
- US Department of Health and Human Services – Center for Environmental Health and Injury Control

State:

- Florida Department of Transportation District III, District Planning and Environmental Administrator, Jason Peters, PE
- Florida Marine Fisheries Commission, Director
- Florida Department of Environmental Protection, Office of Land Use Planning and Biological Services, Director
- Florida Department of State, State Historic Preservation Office, Director
- Florida Fish and Wildlife Conservation Commission, Director

Regional:

- West Florida Regional Planning County, Executive Director, Terry Joseph
- North Florida Water Management District, Director

Local:

- Florida-Alabama Transportation Planning Organization (TPO), Chairman
- Whiting Field, Captain Enrique Sadsad, Commanding Officer and Public Liaison, Lt. Randy Roy

2.3 Concerned Citizens and Property Owners

As previously mentioned, property owners, community leaders, and concerned public will be included in the mailing list. Affected property owners are defined as those whose property lies, in whole or in part, within 300 feet on either side of the centerline of each project alternative alignment. In addition, the general managers and main stakeholders in the medical and civic complexes will be put on the mailing list. Any additional concerned citizens that participate in meetings or make contact with the project team will also be added to the list. Any groups requesting additional information or a presentation by the project team will be granted their request as soon as possible to ensure constant communication with all of those wishing to participate in the process. All those included in this list will receive project newsletters and meeting notifications for all public meetings. The public involvement database will include the names, addresses, phone numbers, faxes, emails and important comment information as they are gathered and become available. This list will be updated throughout the life of the project.

Public Interest Organizations

- Blackwater Heritage State Trail, Gerard Greco, Manager
- Blackwater River Foundation, Inc., Mack Thetford, PhD, President
- Bagdad Village Preservation Board, Director

2.4 Media

Identification of Santa Rosa County media will be used to carry public notices, news releases, news items and interviews to inform the public of the project's purpose, needs and public events. The project team will also tap into existing City and County resources to further reach out to the public and media. A preliminary list of media to be contacted is listed in the Public Notification section of this document. All media contact will go through FDOT's Public Information Office (PIO).

III. PUBLIC NOTIFICATION METHODS AND MEETINGS

The public involvement process for the SR 87 Connector PD&E Study will be as inclusive and conclusive as possible. The study team will use several techniques to maximize existing public information resources in Santa Rosa County to provide for a high level of public participation to ensure receipt of constructive recommendations to be used by the engineering team developing the alternatives.

Metric Engineering, Inc. (MEI) will serve as the public involvement coordinator for the project. MEI currently maintains the lists being developed for public and agency notification, and will be charged with working with the Project Team to insure that all interested organizations and stakeholders are involved in the process. MEI will arrange for meetings with elected officials, community group leadership, property owners, businesses, and agencies.

Public participation is solicited without regard to race, color, religion, sex, age, national origin, disability, or familial status. This project is being developed in accordance with Title VI of the Civil Rights Acts of 1964, as amended.

The following public notification techniques will be utilized in the project development process:

- Invitational letters
- Informational newsletters
- News releases to the media
- Public notices – legal and display ads for public meetings and hearings
- Public announcements
- Direct mailing list – A direct mailing list will be established and updated throughout the project. At a minimum, the following individuals/groups will be contacted in order to provide project information and obtain public input into the project development process. The mailing list will include:
    - Those whose property lies, in whole or in part, within 300 feet of the centerline of the roadway.
    - Santa Rosa County elected and appointed public officials
    - City of Milton elected and appointed public officials
    - Florida State Senators
    - Florida House of Representatives
    - US Senators
    - US House of Representatives
    - Individuals who request to be placed on the mailing list for this project.
    - Public and private groups, organizations, agencies, or businesses that request to be placed on the mailing list for this project
    - Homeowner associations and business groups impacted by the project.

The following mass media will be utilized at various times to carry public notices, news releases, public service announcements, news items, and interviews:

NEWSPAPER(S):

Santa Rosa Press Gazette
Attn: Bill Gamblin
6629 Elva St
Milton, FL 32570
850-623-2120

Northwest Florida Daily News
PO Box 2949
Ft Walton Beach, FL 32549
850-315-4353

Gulf Breeze News
Attn: Lisa Newell
PO Box 1414
Harbourtown Suite 35
Gulf Breeze, FL 32563
850-932-8986

Pensacola News Journal
101 E Romana St
Pensacola, FL 32502
850-435-8500

TELEVISION:

WSRE TV Channel 23
100 College Blvd
Pensacola, FL 32504
800-239-9773

WPMI TV NBC 15
6485 Pensacola Blvd
Pensacola, FL 32505
850-484-9882

WPAN TV Channel 53
3300 N Pace Blvd
Pensacola, FL 32505
850-433-1766

WJTC TV UPN 44
6485 Pensacola Blvd
Pensacola, FL 32505
850-484-7692

PNC Telecommunications
3801 N Pace Blvd
Pensacola, FL 32505
850-433-1141

Cox Media Advertising
1480 N Palafox St
Pensacola, FL 32502
850-432-1403

RADIO:

Pamal Broadcasting
6085 Quintette Rd
Milton, FL 32571
850-944-5357

Reality News Network
913 Kenny Dr
Pensacola, FL 32504
850-505-4966

In addition to working with the media, a number of different notification techniques will be used throughout the project development process. A brief description of these techniques is listed below:

Letters / Newsletters: Invitational and informational letters and newsletters will be distributed to elected and appointed officials, property owners/tenants, business owners /operators, and interested parties as feasible. It is anticipated that five (5) newsletters will be distributed for this study between February 2010 and

	January 2013. Notices will be hand-delivered to residences and businesses located directly along the project corridor as deemed necessary by the FDOT.
News/Press Releases:	News/press releases will be submitted to the FDOT seven days prior to each public meeting and the public hearing.
Public Notices / Legal Display Ads:	Public advertisement will consist of a legal display advertisement published in the area newspaper with the largest circulation twice prior to the public meeting and hearing and once to announce Federal Location and Design Concept Acceptance (LDCA) at the end of the study.

IV. PUBLIC MEETINGS

The following public information meetings will be held to involve the public, local officials, media and interested agencies in the process and to inform the interested parties of the project's current status. The meetings will be fully advertised and all efforts will be made to inform the public of the upcoming meetings.

A. Elected Officials / Agencies Kick-Off Meeting – A project kick-off meeting will be held with local officials / agencies to notify them of the commencement of the project. The kick-off meeting will outline the project process, scope and schedule. This is beneficial in establishing all agency and elected official contact personnel and to allow the project team to convey all necessary documentation and information related to the project.

B. Unscheduled Public and Agency Meetings – A presentation will be made to the Florida-Alabama TPO and the Florida-Alabama TPO Technical Coordinating Committee (TCC) prior to the Public Hearing to apprise local officials of the project status, specific location and design concepts and to receive their input. Additional TPO coordination may be required following the public hearing.

C. Public Information Meetings – Four public information meetings will be conducted. The first public meeting will be the Public Kickoff Meeting, which will introduce the project, establish the Need and explain to the public how they can be a part of the project's public involvement process. The next public meeting will serve as the Alternatives Meeting. This meeting will present viable project alternatives. A minimum of two alternatives will be recommended: one 'Build' alternative and one 'No Build' alternative. The No Build alternative will be explained at the meeting and the public hearing as a viable alternative. There will also be two Access Management meetings. The Project Team will be present to answer any questions posed by the public at these workshops. Information stemming from these workshops will be documented, summarized and presented in the newsletter.

D. Small Group Meetings – Small group meetings may be held with nearby neighborhoods, homeowners associations, or civic organizations, as approved by the Department. The intent of these meetings is to present the latest project information and to provide opportunities to discuss specific issues.

E. Public Hearing – A Public Hearing will be conducted as required by federal regulation and state law, subsequent to the draft environmental documents approval by FHWA, or as directed by the District

Office of Planning and Environmental Management. Details about the public hearing process are available in Section VI.

F. Meeting Location – All public meetings will be held as close to the project corridor as possible. Potential meeting sites in the Study Area will be evaluated and presented to the Department for review and approval. The building will meet Americans with Disabilities Act (ADA) requirements and be recognized as a popular meeting place for residents. Public schools will not be considered for these meetings due to the recent regulations implemented with the Jessica Lunsford Act.

Public Outreach Schedule

	2009	2010			2011		2012		2013
	July	Feb	Mar	Apr	Jul	Aug	Jul	Aug	Jan
Compile Mailing List	★								
Newsletter #1		★							
Elected Officials/Agency Kickoff Meeting			★						
Public Kickoff Meeting			★						
Newsletter #2				★					
Newsletter #3					★				
Alternatives Public Meeting						★			
Newsletter #4							★		
Public Hearing								★	
Newsletter #5									★

V. COORDINATION WITH SANTA ROSA COUNTY

Copies of maps depicting all alignments and design concepts under consideration, along with draft copies of any engineering and environmental study documentation will be furnished to the Engineering offices of Santa Rosa County and the City of Milton for review and comment. Updated information will also be provided for display twenty-one (21) days prior to the Public Hearing.

VI. PUBLIC HEARING

In compliance with the Project Development and Environment Manual, 23 CFR 771 and Section 229.155, Florida Statutes (F.S.), a Public Hearing will be conducted. A Public Hearing Checklist will be prepared prior to the Public Hearing. A similar checklist may also be used for other public meetings as needed.

PUBLIC HEARING SITE: Several locations already identified will be visited well in advance of the Public Hearing in order to locate and reserve a facility that will accommodate the anticipated public and will meet all requirements outlined in the Americans with Disabilities Act (ADA).

PUBLIC ADVERTISEMENT: Public Advertisement will be accomplished with a quarter page legal display advertisement published 21 days prior to the Public Hearing and 15 days prior to the public workshops. The advertisement will be repeated for the public hearing seven days prior to the meeting. The advertisements will appear in the Gulf Breeze News and the Santa Rosa Press Gazette.

The hearing notices will also be published in the:
Florida Administrative Weekly
Division of Elections
Florida Department of State
The Capitol
Tallahassee, FL 32399-0250

The display advertisements will be sent via e-mail to the Office of General Council at least 35 days prior to the hearing date.

LETTERS OF INVITATIONS: Letters of invitation will be mailed 21 days prior to the Public Hearing to all property owners within boundary limits determined and set by the FDOT (Section 339.155 requires that property owners within 300 feet be notified) and 25 days prior to the hearing to all local government on officials (elected and appointed). In addition, notification letters will be sent to everyone on the project mailing list, flyers will be distributed throughout the corridor. Additionally, these flyers will be available at the office of those elected officials representing the corridor.

HEARING PREPARATION: The hearing will be conducted by the District Planning and Environmental Engineer or his/her representative. A Power Point presentation outlining the project, graphic displays, handouts, speaker cards, and comment forms may be used to supplement the public hearing presentation.

TRANSCRIPT: A verbatim transcript of the Public Hearing will be developed to include any letters received by the FDOT as part of the public record as well as affidavits of publications of legal ads. Speaker cards, sign in sheets and other comment sheets filled out at the Public Hearing will be part of this record. A Public Hearing Summary will also be prepared as part of the transcript package. The Consultant will provide copies of the transcript for the Department's use and a copy of the *Public Hearing Transcript* will be forwarded to the FHWA Division office.

DOCUMENTATION FOR PUBLIC INSPECTION: Documentation for public inspection will include all draft environmental documents, Draft Preliminary Engineering Report and project alternatives.

TITLE VI CIVIL RIGHTS ACTS: Notification of the Title VI Civil Rights Act will be provided in the Public Hearing presentation, by handout, signage and through availability of personnel on Title VI Program.

AMERICANS WITH DISABILITIES ACT COMPLIANCE: Notification of the Department's intent to comply with the Americans with Disabilities Act will be provided in the public advertisements for the public hearing, by invitational letters to property owners and local officials, by handout, newsletters, and by selection of a public hearing site that meets all ADA requirements.

3.0 PUBLIC INVOLVEMENT AND COORDINATION……..

3.1 Elected Official Meetings……

3.2 Public Kick-Off Meeting……

3.3 Agency Meetings……

3.4 FHWA Meeting……

3.5 Scoping Meeting……

3.6 Public Corridor Meeting……

3.7 Alternatives Meeting……

3.8 Conclusions……

3.1 Elected Official

Several Elected Officials Meetings were held. The first Elected Officials meeting was held on March 9th, 2010 with the City of Milton City Council members at their regularly scheduled meeting at Milton City Hall. The next meeting was with the FL-AL TPO during their regularly scheduled commission meeting on March 10, 2010. In addition, we met with the Santa Rosa County Commissioners during their regularly scheduled commission meeting on March 18, 2010.

These were introductory type meetings where Project Manager, John Flora, introduced the project through Powerpoint presentation. Most of the comments received from these meetings were general location comments, not leaning for or against the northern or the southern corridors; however, the comments from the Santa Rosa County Commission seemed to be favorable to the northern Corridors, especially Corridor 3. Several commented at this meeting that we should utilize Marty Martin Way.

3.2 Public Kick-Off Meeting

A public kick-off meeting was held at the Santa Rosa Auditorium on March 23, 2010. All elected officials and property owners in the affected areas were invited. We sent out 490 invitations to property owners who were within 300ft of the centerlines of the corridors. 156 people attended the meeting for a total of 32%.

- We received 19 comments through both the website email and regular mail. Some of the comments were split between two different routes which they prioritized. The following is a breakdown of responses:
    - Corridor 1 – Corridor 1 was liked by 1 commenter because it provided economic benefits without impacting Whiting Field. However, 2 disliked Corridor 1 because it would potentially divide the City and could leave US 90 as a Failing Roadway (this comment was for all northern routes).
    - Corridor 2 – Two comments were received directly for Corridor 2. One comment was the same as above, that it would divide the City. In addition, one commenter stated they disliked that Corridors 2 and 3 encroach on Whiting Field. Corridor 2 was also commented on as one of the Northern Corridors that may leave US 90 Failing.
    - Corridor 3 – Corridor 3 was liked by 2 for hurricane evacuation, less impact to homes, Whiting Field and Milton Industrial Park Access, and it may allow growth further north. Two comments were received against Corridor 3 because of the environmental concerns and terrorist threats. In addition, another commenter stated they disliked that Corridors 2 and 3 encroach on Whiting Field.
    - Corridors 4-6 (these comments did not specify a particular ending and they also generalized them into the 'Southern Corridors') - 14 positive comments were received for the Southern Corridors. The reasons generally included improved US 90 traffic conditions, serving Milton residents near downtown and supporting historic downtown. One negative comments was that a bridge in this location would hurt pleasure boaters.
    - One Commenter stated that a adding lanes through Milton on US 90 in its existing Location is the best alternative.

Written Comments:

1.) Thank you for the information provided by you regarding SR 87 Connector Study.

I strongly recommend selecting Corridor 4a and 4b over other corridors for the following reasons. **Please forward these comments to other principals.**

- Hwy 90 East from downtown Milton to Hwy 87 S is a heavily traveled road, often leading to congestion and traffic jams. The proposed Corridor 4a is parallel to Hwy 90 E. It will relieve traffic jams by providing alternative route.
- The existing bridge on Blackwater River out of Milton will need to be replaced and widened in the future years. Building Corridor 4a and 4b would obviate this need.
- Constructing Corridor 4a and 4b would serve a much larger size of population than Corridors 1a, 2a or 3a.
- Selecting Corridor 4a and 4b might even be more cost effective, as it is the shortest route in length.
- Corridor 4a and 4b would provide relief to residents of Baghdad community and those lving along Ward Basin Road.
- For most residents in SR County, connector 4a would be the quickest escape route in case of emergency evacuation.

2.) I am a resident of Milton and have been involved in a number of DOT meetings that have led up to this point.

1. The 4-lane through Milton would absoltely bring the town, it's economy and it's revitalization efforts to a halt.

2. First choice, the northern-most route because it provide Whiting Field and the industrial area with a direct corridor from I-10/SR 87. In addition, the town would grow within and benefit from the high speed traffic circle created.

2. Bridge height of 42' minimum required. The southern route would probably not provide a bridge of adequate height to allow the current pleasure boat traffic, thus hurting our ability to attract the boating public from the gulf and the intercoastal waterway.

3. The other two routes do not benefit Milton when you think of future growth. In the future Milton/Bagdad will expand in all directions. While all the routes seem to serve Milton/Bagdad at the current time, in the future the northern route will border solid developement to the south and the base will probably expand northward, thus making the northern route even more valuable to bothe the city and the base (vs dividing a growing city and still not directly serving the base).

3.) Dear Sir/Madam:

On behalf of Main Street Milton, I would like to provide comments on the SR 87 PD&E Study. The Main Street Milton vision is to preserve the unique historical character of downtown Milton while working to return downtown Milton's historic commercial district to an active, lively community center with a strong economic base. Transportation planning is a critical component of our downtown revitalization effort.

Main Street Milton has been a strong supporter of the City of Milton position as it relates to SR 87/90 through the historic downtown. The City, along with local organizations and residents, supports a southern alternate route that would protect the many historic resources found in the Milton Historic District. Thus Main Street Milton supports Corridor 4 in the SR 87 Connector PD&E Study as the best option to meet the long term transportation N/S and E/W needs associated with SR 87/90.

Main Street Milton also asks that strong consideration be given to making adequate connections from any new road corridor to the historic downtown, including vehicle, pedestrian, and bicycle access. We are working to support improved bicycle and pedestrian access and safety so our community can become known as a safe and friendly bicycle/pedestrian community. We also support bicycle and pedestrian connectivity between the Milton Historic District and the Bagdad Historic District, seperated by less than one mile. Any new road construction should include improved bicycle/pedestrian infrastructure appropriate for an urban area such as Milton and supportive of connectivity between Milton and Bagdad. Revitalization efforts very much depend upon having adequate bicycle/pedestrian infrastructure and safety features.

We also ask that context sensitive design features be used in all bridge/road planning and construction in proximity to the Milton Historic District.

Thank you for the opportunity for input on this important corridor study and please feel free to contact me if you have any questions or if Main Street Milton can be of assistance.

4.)

John,

Thank you so much for such an informative presentation in Milton yesterday. Afterwards, I looked for you to introduce myself....but you did a quick fade :) Understandable too in that past stuff with the city council frequently turned ugly quickly..... You thorough and gentle presentation was right on the money...hitting all the points nicely...again Thank you.

You mentioned news letters.....and this is the primary purpose of this email...we need them bad...so we can stay connected to this project in a meaningful way.....Frankly, this project I think will re shape Milton's future in a very big way.....with respect to future (city) expansion in the following decades. Probably should get it right....form "getgo".

So, how do I get on the project letters list/emails as a way to stay connected to this important issue?
I sometimes travel with my job....but this is more important ...I mean really! :)

Anyway,I am sure that no one wants to have a major thru way thru their neighborhoods.....so I think this puts us all on equal footing.

Anecdotally....and if I can get to the "town forums".....I'll address these issues there.....and they are:

1) environmental impact
2) base security
3) greatest economic development
4) best "cost/ Benefit" ratios.....

I live off East gate road...(green/pink/red corridors).
Environmentally, this project will hugely impact these areas.
For example, earlier this year....on our 42 acres...for about a month or so...saw panther tracks...some neighbors down the road actually got "eyes on"...said it was a black one...tho you could see darker spotting underneath its dark coat. Personally, I see Cayote, bobcat, dear, and just yesterday.....Bear tracks...both big and small, on the property (thats actually routine tho). Picture plants are routinely seen on Clear creek.....actually caught and re released a " Leopard Crawfish"....had a hard time classifying it in that they're really rare. Beautiful in that it was in the creek....very LARGE...with a tan undercoat...and darker brown patchy/mottling...Saw something in clear creek as yet to be defined....it looked like "Culerpa"...a salt water calcium based plant....Not known to fresh water.....they come in various shapes and sizes.....this was of the "Berry/Pea" shaped form...only in fresh water...in clear creek! nice. Not in any texts.....if I find it again...I'll foto it extensively..maybe even get a sample...if it is prolific..... I'll be famous!

If you take a "gods eye view" of the area...you'll see significant large undeveloped areas "kind of attached" in various ways, which act as a wildlife corridor...Think the road would impact that...reallyreally. Now you must understand that I bought this property a bit over a year ago...it was used as a dump forever and ever.....even got a pre civil war cotton mill site on it...with old bricks strewn along the creek...on our property. We've cleaned it up.....got in with the Federal "WHIP" program...which stands for wildlife habitat improvement program. Have planted 5000 pine trees this winter....am restoring the land....guess I feel strongly about the area. :)
Furthermore....The Nature Conservancy owns land on the end of my road (Whiting Acres Lane) along clear creek. They think this area has significant environmental value as well.

Next...and close to my heart....is Whiting Field. The green route puts undue exposure to the perimeter fence to easy public access. What I do know is that Whiting ....and the county is sensitive to this security issue in that the county bought 30 acres across the street from me. It is a landbuffer to the base. But as well, to prevent land development along final approach corridors to the runways....A timeless issue with airports in general...and has been so with NAS whiting field for decades.

Anyway, if John Q Terrorist wanted to "Hurt the US Navy".....just lob something over the fence while doing a "driveby" on the Green route. Go figure.....Eglin was already targeted. If the bad SOB's knew that the vast majority of Navy Pilots came thru Whiting....They'd feast.....Incidentally, I am USN retired....Having gone thru VT-6 as a student, and later as an instructor pilot. I Love My Country.....and this beautiful area....It does put Whiting Field at risk although.

Lastly...economic impact.....

rhetorically.....the only corridor that makes sense is the yellow one. I mean really. Think about it....You put a 4 lane in the middle in the of nowhere...How impactful.....Right....Maybe the "Pitstop" on Munson/191 would like it.....but if you take it thru town...It would have major players attracted to it....Probably making "Milton", the next bustling "Pace"...Not something that I would like to see.....although inevitable within the next few decades.....

Also, you can't advertise this as a "Hurricane escape route". Hurricanes generally come in from the south. A reasonably smart evacuee does not escape to the north....but perpendicularly to the storm....namely east or west (Eg I-10).....

Will pass this thru the appropriate channels....

Again, Thanks for a great presentation,

5.) We have looked at the options that were presented at the meeting on the 23rd of March 2010 and feel that the best options for the sr87 connector is option 3A. This path looks like it would have the least impact on homes in the area due to it being a less populated area. It would also improve hurricane evacuation by getting traffic north of the populated areas of Milton, while also improving the commercial traffic to NAS Whiting Field and the Commerce Park/Industrial Park in East Milton with access to I-10.

6.) To Whom It May Concern,

I am in favor of the "southern alternate route" as the best choice for the 87 connector. I concede that there is a connection problem that must be rectified, but it is not solely a north-south connection problem, but an east-west one as well. Not all traffic traveling 87 North from Navarre, wants to go on to Chumuckla or Brewton, most in fact, probably want to travel west - to Milton or Pace. That has to be part of the solution.

If you choose any of the three more northerly routes, it will still leave 87 as a failing road, as it ignores one of the major concerns to be addressed. The traffic that wants to go to Milton and Pace will still inadate Hwy. 90 which of course is also failing. It only makes sense that if FDOT is going to fix a problem, it should be fixed all the way around, not just part way. This will only waste time, funds, and make residents frustrated. The southern alternate, is also sensitive to protection of the historic downtown; which the community is in favor of

Unfortunately, it seemed evident by the official comments made at the public kick-off meeting, that there was already some skepticism about the southern route - almost as if it had already been written off. One of the reasons was because of environmental impacts. Actually, there is a northern route that is more invasive to the watershed, wetlands, etc. Check with the Nature Conservancy.

Two of the most northern routes also encroach on Whiting Field, the economic backbone of Santa Rosa County. Numerous state, county, and environmental groups have worked hard for years to purchase a large buffer around the base to protect it. The two most northern routes come too close to the base and would invite development, which would hurt the base's mission. Too many public and state funds have gone to protect it.

The southern alternate is the best choice for all concerned and truly handles all needs (north, south, east, and west) not just some of them.

It needs full, serious, and honest consideration, and is my first choice.

7.) **COMMENTS:**

I favor the Southernmost route being offered for development. Some of this property is currently underdeveloped and would have the least impact on citizens who reside in proposed path.

This corridor (shown in yellow) would serve as a great solution for ~~moving~~ meeting need for 4-lanes of traffic through Milton.

8.) **COMMENTS:**

I am concerned about North / South hurricane evacuation, the poor condition of East/West transportation through Milton, and ensuring significant buffering of Whiting Field to ensure Base Realignment And Closure (BRAC) continues to look favorably on the Navy in Santa Rosa County. The Southern Route, south of Milton (#4) improves North / South + East / West transportation + does not threaten Whiting Fields buffer. If this route does not provide adequate North / South transportation, I believe route #1 (which intersects 87 + 89 closest to Milton) is the best way to protect the many economic benefits of the Navy's presence in Santa Rosa County.

9.) **INTEREST IN PROJECT:** Protecting the historic district of Milton. I am the President of the Santa Rosa Historical Society.

COMMENTS:

I support the souther alternate route that bypasses the historic district of Milton, Fl. The buildings in downtown milton are "one of a kind" and bring character to our community. I'm also in support of a Northern route. If at all possible, I would like to see both routes happen. (Northern + southern bypass)

10.) **INTEREST IN PROJECT:** We need to protect the downtown Milton Historic district.

COMMENTS:

I favor the Southern alternate route (corridor #4) because it adequately handles the East/West traffic flow and does not go through the downtown historic district.

11.)

COMMENTS:

As a resident of Milton, I don't support the widening of highway 90 to four lanes in its existing route; I do support, if something must indeed change, Route #4 South of Milton for improved East/west hurricane evacuation and an improved flow of traffic on 90.

If there must be additional routes in N/S routes from 90 to 87, I only support option #1 as it would interfere less with NAS Whiting Field Buffers, potential Florida Forever aquisitions and encourage less development on the East and Southwest portions of Whiting. The Navy is crucial to the economy of this area and they have already partnered with the County to create more buffers around the field; I see future proposed Roads close to the field interfering with this relationship as well as potentially interfering with Navy's presence in our low income county. Thank you.

12.)

COMMENTS:

Our goal as Milton residents is to have traffic move through our town with ease. Unfortunately, at certain times of the day on Highway 90 this is impossible. Major traffic backups and delays occur on that portion of Hwy 90 east of the Blackwater River bridge. People trying to get to and from work and school must endure long lines and time lost waiting for bottlenecks to clear on this ~~[illegible]~~ lane (each way - east + west) road.

To alleviate the congestion, I feel opening up 2 more lanes along Highway 90 taking traffic south of Milton's Historic District and re connecting with Hwy 90 prior to Pond Creek bridge would make the most sense. This would serve the 50,000 residents of Pace best, also as well as accomodating those who wish to shop in downtown Milton

13.)

COMMENTS:

The southern alternate route is preferred for it handles the east and west bound traffic. This route would protect the historic district of downtown Milton.

14.) COMMENTS: The Southern alternate route would be my preferred choice. This should ease the traffic flow through Milton now

15.) COMMENTS:
I see the main objective as one of easing traffic pressure off Hwy 90 through downtown Milton. I feel that the following would be the logical approach:
Priority One - Build Route 4a first and relieve commuter congestion on Hwy 90.

Priority Two - Next Build 3a - to make an improved evacuation route in case of hurricane or other disaster.

The other routes would be helpful, but I feel the above two priorities should come first.

16.) COMMENTS:
I am in Favor of Southern Route for Two Reasons:
Reason #1 is its proximity to Milton Historical Dist.
#2 is it is the only solution that Addresses the East West Flow of Traffic.

17.) COMMENTS:
I savor the southern route south of Milton, & it provides an east/west route. Really want to see the historic Milton stay the way it is for future generations.

18.) COMMENTS:
I have moved to Milton in 2003. I fell in love with this small town and want the historic downtown area to stay the way it is. It is beautiful and needs to be preserved for future generations.

19.) I am against putting a connecting two-lane road from hwy 87S through East Milton and Bagdad, to 87N (stewart st)Florida. There is no need for destroying homes and wet lands when an alterior route can be done! NO NO NO NO

Sincerely,

- The following is a synopsis of the verbal comments that were received at the meeting by our staff.
    - We had 5 negative comments on the southern corridors. Two wanted us to look at one-way pairs, 1 wanted us to know about a church in the west end of the alignment, 1 wanted us to know we were impacting family property and 1 wanted us to know about the historic mill location in which Milton got its name. All stated they would wait until the preferred corridor is chosen as the corridor location could be shifted to miss these items.
    - We had 2 comments, one from a Greenways and Trails employee and 1 by a gentlemen who called himself the 'Father of the Blackwater Heritage Trail'. They wanted to ensure that there would be little to no impacts to the Trail. They also expressed dislike for an at-grade crossing of the Trail.
    - We had 1 comment about alignment 1 stating that it follows a powerline. This property owner expressed that DOT will have to 'pay me' for my property adjacent to the powerline. He wants to wait until the preferred corridor is selected for further comments.
    - I had 1 comment about a historic cemetery near the convergence of alignments 1, 2, and 3. (We found this cemetery and collected a GPS point of its location).

3.3 Agency Meetings

Two Agency meetings were held. The meeting dates and minutes are as follows:

DEP meeting 1: This meeting was held with a variety of Agency representatives at the FDEP Douglas Building, OIP Conference Room #953B on March 24th, 2010. The following Agency representatives attended the meeting:

FDOT/D3: Peggy Kelly
DEP/OIP: Lauren Milligan
DEP/OGT: Rick Halvorsen
DEP/OIP: Chris Stahl
DEP/OGT: Marsha Connell
DOF: John Waldron
DOF: Dennis Hardin
DSL: Gloria Barber
DSL/OES: Marianne Gengenbach
DSL: Tom Butler
DSL: Kime Laudes
Metric: John Flora

Purpose of Meeting:

To address the red-flagged comments made by FDEP on Corridor Alternative 3A, and the red-flagged comments made by the WFWMD on Corridor Alternative 4, the FDOT and Project Team arrange to meet with FDEP and the Florida Division of State Lands to discuss the environmental issues and the limitations on the State lands and the lands adjacent to the State lands.

Corridor 3 Discussion:

Mr. Flora provided and overview of the corridor location. He noted that FDEP had red-flagged the corridor because its alignment went through one of the Florida Forever lands. He stated the Project Team had since adjusted the alignment to avoid the parcel and the revised alignment no longer went through any of the Florida Forever lands.

Mr. Stahl stated that the red-flagged would remain on the corridor because the alignment was in proximity of the Florida Forever lands, and it was passing through areas planned to be purchased by the State using Florida Forever Funds. He stated the target lands were high on the Programs target list.

Mr. Flora asked if it was possible to red-flag a corridor when the State did not even own the land.

Mr. Butler stated that it was indeed possible.

Mr. Stahl added that it was possible because of the secondary impacts. He explained that the corridor would isolate, or "orphan" the smaller from the larger preserve areas. He also noted that because of the location, control burns would not be allowed on the smaller parcel, and FDEP would consider that as a primary impact.

Ms. Milligan inquired about the Team Santa Rosa Joint Planning Area. She asked what the intent of the County was.

Mr. Flora explained the Joint Planning Area was between the County, Whiting Field Navel Air Station, and the Nature Conservancy. The intent of the JPA was to implement planning controls for the lands surrounding field, and to provide a buffer for Whiting Field. He stated part of the objective of the County was to secure the lands for environmental preservation, and the remainder areas would have land uses that were compatible with Whiting Field. He noted that it was always their intent to have a road up through the area to provide access to the compatible use lands and to the recreation facilities that were part of the Florida Forever lands. Mr. Flora noted that it did seem odd that DEP would not want a road through the area because it was his understanding the DOF desired to use the area as an off-road vehicle recreation area. Without a road, it may be difficult to get access to the property. Mr. Flora also noted that the County was under the impression that an easement conveyance would be part of the new purchase for a roadway to help connect with the new ATV recreational area that the DOF was supportive of. He also noted that the County thought they had an easement through the section of Florida Forever lands that was adjacent to the three parcels near Whiting Field that DEP had flagged in their dispute. The County gave Mr. Flora and Ms. Kelley a map showing the easement area t hey thought they had. This map was presented at the meeting to the agencies for their review.

Mr. Waldron did confirm that was the intent of DOS.

Ms. Milligan asked if the County was unaware of the limitations on lands when purchased with Florida Forever funds.

Mr. Flora stated perhaps not.

Mr. Stahl stated that, given FDEPs intent to provide a contiguous environmental belt that extended from Whiting Field to the Blackwater River State Park and up to the Wolf Creek Preserve, DEP would be opposed to a road traversing the area.

Ms. Milligan stated that she still felt it was necessary to meet with the County to see if they would be able to coordinate their intentions. She stated that it was extremely important that the County meet with Debra Poppel and the DSL staff.

Ms. Barber agreed and stated that she would arrange for such a meeting.

Mr. Halvorsen stated that regardless of the corridor, he wanted to meet with the Project Team to see how coordination with the Blackwater River Heritage Trail would be accomplished.

Mr. Flora stated that the Project Team has a great deal experience in trail design and they would incorporate OGT in the design development process. He also noted, that with Corridor 3 the trail could be extended all the way north of Whiting Field to SR 87N, and would also help in completing the trail that is planned to circle Whiting Field.

Corridor 4 (The Southern Corridor) Discussion:

Mr. Flora explained that like Corridor 3, Corridor 4 had also been red-flagged. He noted that it had been red-flagged by the West Florida Water Management District. Where the corridor crosses the river, it hits lands owned by the Water Management District, and those lands had been purchased with CARL Funds, As such, similar limitations and restrictions associated with Florida Forever Funds are apparently applicable.

Ms. Barber explained that was not always the case. She stated that it really depended on which set of funds were used, the timing of the purchase, and sometimes whether or not the bonds had been paid off. She stated that she would have her office look into the funding sources for these purchases. She did note, however, that DOS would still be opposed to the use of the lands, as the whole intent in the purchase was to protect the Blackwater River.

Mr. Flora asked that since the lands were barrier islands and linear in nature, might it be possible to develop a design that would clear span the islands.

Ms. Barber expressed concern that would only lead to putting more structure in the waterway itself, which would be discouraged, and to eliminate shadowing on the islands, the structure would have to be rather high. She said then you will be getting into aesthetics and community impact issues.

Ms. Milligan stated that though the Water Management District red-flagged Corridor 4, DEP also had considerable concerns about the corridor location.

Other Items:

Mr. Flora stated that he recognized the concerns associated with both red-flagged corridors. He stated the area is an area of unique concern because so much of the area was environmentally sensitive. He stated the Project Team was very deliberate is seeking the least invasive corridors for considerations. Mr. Flora stated that beyond these kinds of issues was the river crossing itself, which would be of significant concern.

Mr. Stahl stated that yes the river is a concern, but he said in looking at the Project Team's strategy it was apparent they you were looking at all the right things. He stated that the crossing selected for Corridors 1, 2, 3 was the best possible location. Mr. Stahl stated that the DEP was pretty comfortable with the location and would not have many issues. He said he understood the dire need for the roadway, especially in light of the conditions at the US 90 bridge, and felt the new bridge location was very viable.

Follow-up Items:

Ms. Milligan stated that another meeting would be needed where the County could attend. She said that it was of critical importance that the County staff meet with DOS and Debra Poppel to get a better understanding of what the Florida Forever Funds are about.

Ms. Barber stated she would work on getting the meeting set up for both DOS and DEP.

Mr. Stahl stated that it would probably not be possible to meet until early May because the Legislature had just gone into session. He noted that there was very little time for staff while session is going on.

Ms. Milligan and Ms. Barber requested that in the meantime, the Project Team put together a list of questions for DEP and DOS. They said that way they can be researching the answers in preparation of the next meeting.

Mr. Flora concurred.

DEP meeting 1: This meeting was held with a variety of Agency representatives at the FDEP Carr Building, on May 21st, 2010. The following Agency representatives attended the meeting:

FDOT/D3: Peggy Kelley
DEP/OIP: Lauren Milligan
DEP/OIP: Chris Stahl
DEP: Amy Phillips
DEP/OGT: Rick Halvorsen
DEP/OGT: Jim Wood
DEP/OGT: Gerard Greco (via teleconference)
DOF: Dennis Hardin
DOF: Corinne Hermle
DSL: Deborah Poppell
DSL: Gloria Barber
DSL/OES: Marianne Gengenbach
DSL: Tom Butler
DSL: Kime Landes
NWFWMD: Paul Thorpe
Santa Rosa County: Nancy Model
Santa Rosa County: Mary Ann Vance
Metric: John Flora
ERC: Dan Van Nostrand

Purpose of Meeting: The purpose of the meeting was to continue mitigation discussions regarding the disputes that had been placed on two of the four Corridor Alternatives for the SR 87 Connector. Specifically, the two primary objectives of the meeting were to:

1. At the March 24th mitigation meeting, DEP and DSL had tasked FDOT with assimilating a list of questions associated with the dispute. The discussions at this meeting were to review the answers provided by DEP and DSL regarding both Alternative 3a, and Alternative 4.
2. It was the intent to afford both Santa Rosa County staff, and a representative from the Naval Air Station Whiting Field, the opportunity to discuss the intent of the Team Santa Rosa initiative, and the intent behind the Joint Planning Agreement that enabled the purchase of the conservation lands northeast of Whiting Field that were the cause of the dispute issued on Alternative 3A.

Mr. Flora (Metric) stated that since the Project Team had not had an opportunity to review the answers to the questions, they could be perhaps reviewed as part of the discussion about the Alternatives.

Corridor 3 Discussion:

Mr. Flora gave an overview of Alternative 3A, and outlined the issues of concern noted by both DEP and DSL.

Ms. Milligan (DEP) stated that Whiting Field also had concerns with Alternative 3A.

Mr. Roy (NASWF) stated he had done the ETDM review and provided the comments on behalf of Whiting Field. He stated that there was no opposition to Alternative 3A. He noted the Alternative did go through the Accident Potential Zones (APZ-1) of one of their runways. He stated that roads are not a restricted use, but there would need to be special attention provided to not have retention ponds, transmission lines, and excessively high roadway lighting in the area. He stated that it had always been the intent to have a four-lane road north of Whiting Field, but it was intended to be further northeast in the conservation land they helped secure for DEP.

Mr. Roy stated the planning initiative between Whiting Field, the County, and the Nature Conservancy has served as a model for bases across the Country. He stated that a lot of time and effort had been put into developing the plan for the area.

Ms. Model (SRC) concurred with Mr. Roy and stated that there had also been considerable efforts made by area leaders to secure three Congressional earmarks to fund the SR 87 Connector. She stated the overall intent, was to provide a continuous four-lane route from I-65 to the Gulf. She stated that it was thought that northeast Corridor such as Alternative 3A met that need best, and that is why it was included in the Study.

Ms. Model asked how the dispute was triggered in the ETDM.

Ms. Milligan explained NWFWMD and DEP had triggered the dispute for the two Alternatives. She noted the dispute for Alternative 3A was due to the possible impacts to state lands and the

potential impacts to the three parcels north of Whiting Field, since DEP has the parcels on their "to be purchased list" that was part of their Clear Creek/Whiting Field Florida Forever project.

Ms. Vance (SRC) stated that she was aware of the proposed purchases as the County itself facilitated the plan for the area, but it was always intended that a road be allowed to serve the *Aviation Industrial Park*, and have an evacuation route.

Ms. Gengenbach (DSL) stated that State Lands only had issue with the northern portion of Alternative 3A. She stated that it was of great concern due to the habitat fragmentation a four-lane road would cause. She stated that it was contrary to the "conservation vision". Ms. Gengenbach also noted that the DSL is not opposed to a spur road that would provide improved access to the industrial park.

Ms. Model stated the County looks at a much bigger picture and has been very active in conserving lands throughout the entire County. She stated that if however, the conservation interest for this small stretch "trumps" economic development, she believed the County Commissioners would have never agreed to the conservation in the corridor.

Ms. Gengenbach asked if the County was opposed to Corridors 1 and 2.

Ms. Model stated the County had no issues with either of them. She stated the Commissioners were going into the Study with an open mind. They were more concern with eliminating a potentially viable Alternative without necessary justification.

Ms. Model stated that if Alternative 3A was denied, the County would still need to improve the existing Whiting Circle to serve the industrial park. She asked if such an improvement go under similar scrutiny.

Mr. Stahl (DEP) stated that it would not. He noted that it would not have to go through this process because Federal funds would not be involved.
Mr. Butler (DSL) noted that the development of a spur road on the lower part of the proposed Alternative 3 could intersect with SR 191, and such improvements may also enhance hurricane evacuations.

Mr. Hardin (DOF) stated that a four-lane road with moderate to high speed roads have significant and measurable negative effects on prescribed burning. These effects can be detected for as much as a mile on either side of the highway, and include deterioration of ecosystems that must be maintained with prescribed fire, e.g., longleaf pine sandhills and clayhills, loss of wildlife habitat, and accumulation of fuels. These accumulations of fuels create conditions that promote wildfires that can destroy wildlife habitat and forests, and create adverse safety conditions on the highway and for firefighters. These wildfires also constitute a health threat to the surrounding population and can destroy human facilities if they escape control. Prescribed fires will prevent forest and habitat loss and greatly decrease the impacts of wildfire, but they are dangerous and tricky to conduct around four-lane roads. In addition, the

presence of highways restricts the window and conditions within which prescribed fires can be safely implemented.

It was asked how a use as intensive as an OHV Park is consistent with the conservation.

Mr. Hardin noted they are noisy. However, studies have found that wildlife will tolerate the use and Parks can be designed to facilitate wildlife movement and to provide buffers for noise abatement.

Mr. Wood (DEP/OGT) asked about the co-location of the Blackwater Heritage State Trail with respect to Alternative 3A.

Mr. Flora stated that it would be the intent to co-locate the trail in the overall section of the corridor. He stated that he understood a landscaped barrier from the roadway would be desired. He noted with adequate landscaping the trail could be enhanced from what it is now, plus the intent would be to extend the trail all the way to SR 87N. In addition with the extension, connection could be made forthe trail proposed on the west side of Whiting Field.

Mr. Wood said if the intent was to use part of the trail right-of-way, the Governor and Federal Lands people in charge of the parks programs would need to get involved.

Mr. Flora stated that in preliminary discussions with FHWA it was noted a co-location would probably constitute Section 4(f), and a Determination of Applicability would need to be done. He noted that if it merely crossing the trail, FHWA indicated that it would not constitute Section 4(f).

Mr. Wood stated that for any crossing, OGT would be looking for grade separation. He suggested separate box culverts for each of the two lanes of traffic.

Mr. Stahl asked if it would be possible to include a spur from Alternative 1 or 2 as part of the PD&E to serve the aviation industrial park.

Mr. Flora stated that it might be possible, but would need to get confirmation from FHWA.

Mr. Flora stated that given the discussion with the County and Whiting Field, was it still the intent for DEP to maintain the dispute on Alternative 3A.

Ms. Milligan and **Ms. Gengenbach** concurred that it was.

Ms. Kelley stated that she still did not understand how they could dispute on property they did not own.

Ms. Milligan explained that it was because the lands were part of the adopted DEP Clear Creek Master Plan, and due to the direct impacts it would have on the adjacent Stated owned lands.

Mr. Flora requested DEP to provide any documentation that may exist, i.e. Florida Statues, policies, etc., that enable DEP and DSL the governing authority over property that are planned purchases, or effects caused on adjacent lands. He stated that it would help document justification for the Alternatives elimination.

Corridor 4 (The Southern Corridor) Discussion:

Mr. Flora noted that in a quick review of the questions, none had been answered.

Ms. Gengenbach stated the questions had been assigned to the NWFWMD because they lands in question were not part of the Division of State Lands Program.

Mr. Thorpe (NWFWMD) stated they had not had a chance to work on the questions, but noted they had researched the purchase of the barrier island directly impacted by Alternative 4, and had found that it had in fact been purchased with Florida Forever funds. He said any request for use of the lands would have to go before their governing board.

Ms. Gengenbach explained that as long as there are other viable Alternatives, the governing board could not easily approve giving up the land for private use, noting a roadway is viewed as a private use, due to the tax codes and tax penalties that would come into to play. It simply would not be cost viable.

Mr. Flora requested that Mr. Thorpe provide him with the purchase documentation and the associated restrictions with the Florida Forever funds, and Alternative 4 would be eliminated as part of the ETDM process.

Mr. Thorpe agreed.

Other Items:

Ms. Kelley asked the agencies if they had any concerns regarding Alternatives 1 or 2.

Ms. Milligan stated they had no concerns with Alternative 1. She said DEP was also fine with Alternative 2, but noted it did impact parcels planned to also be purchased as part of the Clear Creek project. She stated the concerns were nothing like the one northeast of Whiting Field. She said at least these were on the outside edge, and that would not be a problem.

Mr. Stahl suggested exploring modifications to Alternative 2 pulling it further west to reduce the impacts on the planned purchase parcels. He suggested taking it up through an adjacent neighborhood.

Mr. Flora said they could look at such a route, but in addition to the environmental impacts, they would now be dealing with social impacts, and relocations. He noted the pros and cons, as well as cost, would have to be evaluated.

Ms. Model stated that it would probably be the County's desire to get the connection as far north as possible to more effectively serve emergency evacuations.

Ms. Vance asked how the DEP/DSL could work better with the County so that they are more aware of planned acquisitions, and what would be the associated limitations on those lands.

Ms. Gengenbach stated she would send the County links to planned acquisitions posted on the internet.

Follow-up Items:

Ms. Milligan to provide any documentation that may exist, i.e. Florida Statues, policies, etc., that enable DEP and DSL the governing authority over properties that are planned purchases, or affects caused on adjacent lands.

Mr. Thorpe to provide purchase documentation and the associated restrictions with the Florida Forever funds for the parcel impacted by Alternative 4 to substantiate the Alternatives elimination as part of the ETDM process.

Ms. Gengenbach is to send the County links to planned acquisitions posted on the internet.

Mr. Flora asked for DEP to send the electronic version of the Questions and Answers so they could be incorporated into the project's electronic files.

Ms. Gengenbach stated that she would send an electronic copy of the answers.

Ms. Kelley requested the information be provided no later than three to four weeks from today's date.

3.4 FHWA Meeting

This meeting was held with FHWA and FDOT representatives at the FHWA office located at 545 John Knox Rd, Suite 200, Tallahassee. March 25th, 2010. The representatives attended the meeting:

FHWA: George Hadley
FHWA: Cathy Kendall
FDOT: Brandon Bruner
FDOT: Peggy Kelley
Metric: John Flora

Purpose of Meeting:
For FHWA to make a determination on the projects Class of Action, and to review comments that were submitted by the ETAT members.

Ms. Kelley started the discussion by providing an overview of the project kick-off meetings that had been conducted. She noted meetings had been held with the Santa Rosa County Commission, the Milton City Council, and the Florida-Alabama Transportation Planning Organization. Ms. Kelley stated the public kick-off meeting had been held on Tuesday, March 23rd in the City of Milton. She stated that there was a strong turnout for the meeting and people expressed a lot of interest.

Mr. Flora provided and overview of the corridor locations. He noted that two of the corridors had been red-flagged. DEP had red-flagged the Corridor 3A because the alignment had passed through one of the Florida Forever lands. He stated the Project Team had since adjusted the alignment to avoid the parcel and the revised alignment no longer went through any of the Florida Forever lands. He explained that DEP stated that the red-flagged would remain on the corridor because the alignment was in proximity of the Florida Forever lands, and it was passing through areas planned to be purchased by the State using Florida Forever Funds. He stated the target lands were high on the Programs target list. Mr. Flora explained that like Corridor 3, Corridor 4 had also been red-flagged. He noted that it had been red-flagged by the Northwest Florida Water Management District. Where the corridor crosses the river, it hits lands owned by the Water Management District, and those lands had been purchased with CARL Funds, As such, similar limitations and restrictions associated with Florida Forever Funds are apparently applicable.

Mr. Hadley requested that we continue working with the agencies as part of the ETDM process. He stated that these two corridors may fall out as part of the ETDM screening, and that was how the ETDM process was suppose to work. Mr. Hadley outlined to include the meeting dates as part of the Summary Report.

Ms. Kendall concurred that it would be good to continue to have joint planning meetings with the agencies.

There was a general discussion about the project's logical termini. Mr. Hadley reiterated that the way it had been set up made sense, and he was comfortable with the logical termini. It was discussed that for Corridor 4, SR 89 might be a better link through Milton than SR 87N because it was a more improved roadway with a better level of service.

Mr. Flora stated the assumed Class of Action for the project was an EIS. He said part of the objective of the meeting today was to get confirmation that the Class of Action would in fact be an EIS.

Mr. Hadley noted that if Corridors 3 and 4 were to be eliminated as part of the ETDM process, the project might be considered to be an EA. Upon further consideration, Mr. Hadley stated that to be safe he felt the project should remain as an EIS. He also noted, the analysis should be relative to the full right-of-way build out.

Mr. Flora inquired if they would be receiving the determination in writing.

Ms. Kendall stated that it would be provided in writing, and was part of the ETDM process.

Mr. Flora stated that he would need the determination in order for the NOI be processed.

Mr. Hadley requested a schedule be provided listing the activities from the NOI to the Record of Decision. He noted to include future phases like right-of-way and construction.

Mr. Bruner stated he knew which schedule he was talking about. He stated he had just done one for the EIS portion of CR 388.

Mr. Flora pointed out that all of the Corridors either crossed the Blackwater River Heritage Trail, or would need to incorporate the trail into the roadway right-of-way. He asked if this would constitute Section 4(f).

Mr. Hadley stated that a crossing would not create a Section 4(f) issue. He noted, however, if the trail had to be relocated for some distance as part of the new roadway, it might. He said he would need to look into that issue. Mr. Flora asked if the same would hold true for the Old Highway 90 Historic Trail.

Mr. Flora noted that the Highway 90Trail seemed to be viewed a bit differently by DEP and OGT. He said it seemed to be more of an issue for the State Historic Preservation Office since it was a historic site. Mr. Hadley concurred the issues were different, and that trail would need to be dealt with as a historic site.

3.5 Scoping Meeting

On July 29, 2010 a Scoping Meeting was held for the SR 87 PD&E Study at the Santa Rosa County Commission Chambers. The meeting was open to the public and advertised in the Florida Administrative Weekly. The following people / agencies were sent a formal invitation:

Florida Department of Agriculture – Division of Forestry
Florida Department of Environmental Protection – Branch office
Florida Department of Environmental Protection – District Office
Florida Department of Environmental Protection – office of environmental services
Florida Department of Environmental Protection – land management advisory council
Florida Department of Environmental Protection – office of greenways and trails

Florida Department of State – State Historic Preservation office
Florida Fish and Wildlife Conservation Commission – division of Marine fisheries
Florida Fish and Wildlife Conservation Commission – office of environmental services
Florida Fish and Wildlife Conservation Commission – regional office
National Oceanic and Atmospheric Administration – national marine fisheries services regional office
State department of community affairs
US Army corps of engineers – branch and permit sections
Us coast guard – district
Us department of the interior – bureau of Indian affairs
Us department of the interior – bureau of land management
Us department of the interior – fish and wild life service
US Environmental protection agency – ecological review branch
Us forestry service
Northwest Florida Water Management District
Chairman Gordon Goodin, Santa Rosa Co Commission
Beckie Cato, Planning Director, Santa Rosa Co
Nancy Modal, Planner 3, Santa Rosa Co
Wes Meiss, President Historical Society, Santa Rosa Co
Cindy Anderson, PE, Executive Director, Team Santa Rosa
Terry Joseph, West Florida Regional Planning Council
Bob Cole, Chairman, Florida Alabama TPO
Guy Thompson, Mayor, City of Milton
Randy Roy, NAS Air Operations Department
Vernon Compton, Nature Conservancy
Gerard Greco, Manager Blackwater Heritage State Trail
Martin Knopp, Federal Hwy Admin
Cathy Kindle, Federal Hwy Admin
Chief Amy Oliver, Public Affairs, Eglin AFB
Pete Hall, Captain Whiting Field
Ryan Arvay

Brandon Bruner - Opening Remarks

John Flora – Stated meeting would be informal and questions could be asked throughout the presentation. He discussed several items from the presentation such as the Environmental Issues, Whiting Field location, County Prison, etc.

- **Commissioner Goodin** commented that any planned purchases of Florida Forever Lands that are currently owned by the County should not be considered an obstacle. He stated that this has already been discussed with Secretary Koupelousus. In addition, he also commented that the location be noted of the landfill on SR 87 near Corridor 1C.

- One person commented that property near the power line on 1C may be donated land for a water treatment facility.

- **Cindy Anderson** commented that much work has been done on roadway design for Whiting Circle and north of Whiting Field and that information should be utilized.

- **Vernon Compton** asked for more information about the impacts to the Trail. John Flora replied that Corridor 3A would co-locate with the Trail and extend it. The other Corridors will cross the Trail at some point.

- **Nancy Model** brought up Cindy Anderson's comment and stated that the Blue Line on the Team Santa Rosa Maps has issues with ROW. She added that Federal money had been spent to purchase that property. John Flora commented that no ROW was allotted at the time of purchase for a roadway. Commissioner Goodin replied that he will work with the Legislature to ensure that ROW is allotted before any future purchases.

- **John Flora** stated that it is extremely difficult to deal with Florida Forever Lands. A Special Council must receive information that proves the land is no longer viable for environmental preservation. As with the Southern Corridors, all options cross Florida Forever Lands. The Special Council would consider for this project that there are other viable corridors.

- **Commissioner Goodin** asked what the other issues with Corridor 3A are. John Flora answered that a Florida Forever Parcel will be orphaned by 3A and that my cause a problem. Commissioner Goodin asked that mitigation for the orphaned parcel be considered. Randy Roy stated that Whiting Field works with all of the property owners in the area of Corridor 3A.

- **Commissioner Goodin** stated that protected wildlife is important, but we need to make sure we can mitigate to keep preservation from impeding projects.

- **Vernon Compton** added that it is not only preservation of existing lands, but managing the lands makes roadways in close proximity a problem. For example, burning is difficult and we need to make sure that we do not isolate Whiting Field as a wildlife island.

John Flora moved on with the presentation to cover Corridors 4-6.

- **Ryan Jorgenson** asked if these corridors were an exercise in futility. John Flora replied that all corridors must have a thorough review.

- **Vernon Compton** added that there may be viable option of 4A available, possibly in another study.

- **Ryan Jorgenson** asked if the agenda could be flipped. John Flora added that if another bypass project was study was done, all information collected under this project would be useful. Bryan Yates agreed and stated that FHWA will require a complete review of all corridors. John Flora agreed and added that the public must have all corridors and options explained so they fully understand the results of the review.

- **Marybeth Washnock** asked what Public Involvement activities have been done to date and what the public's comments were.

- **John Flora** stated that a Public Kickoff meeting was held in March and that he had presented to the County Commission, the City Council, and the WFRPC. He state that the historical district made it clear that they wanted the southern alignments, whereas the County seems to lean

more toward the northern alignments. Part of the project includes a need for an evacuation route that the northern alignments better fill.

- **Jim DeVries** stated that this project was not normal because it has 2 very different objectives. They are the congestion on US 90 and the North-South traffic. We may see 2 projects come out of this study. Everyone should remember that we have only seen the environmental analysis and not the traffic analysis. Nancy Model agreed and said that she would like to see what the corridors do for traffic.

- **Jim DeVries** added that it is important for people to flee from a storm, but we need to deal with daily traffic as well.

- **Marianne Gengenbach** clarified the red flags are different. The flag on 3A was from DEP and 4A was from Water Management District. She also asked if a spur road to the industrial complex could serve the County's needs as well as 3A.

- **Commissioner Goodin** asked if the entire roadway network would be reviewed.

- **John Flora** confirmed that all of the roadway network would be reviewed. He also added that Marianne was correct that Corridors 1 and 3 could have a spur and he was looking at that option as well.

- **Commissioner Goodin** added that he was concerned about residential encroachment on Corridors 1 and 2. He feels that 3A would be better and the County would give them free ROW.

- **John Flora** added that 3A would also have less bridge costs than Corridors 1 and 2. Corridors 3 and 4 were red flagged and we will continue to work through them. John then turned the presentation over to Martin.

Martin Gawronski began the discussion on the wetland % acreage impact. Corridors 4 and 5 have the highest, with 3 having the smallest. In addition, 4 and 5 have hardwood floodplains that are usually regulation.

- The representative from SHPO asked if it was possible to span the Florida Forever Lands in Corridors 4-6.

- **Martin Gawronski** added that we are looking at that possibility. He added that Corridor 3 also has the least % of Floodplain acreage and the Corridors 4 and 5 have the least threatened and endangered species impacts.

- **Marianne Gengenbach** asked specifically about the imperiled species, the Salamander.

- **Martin Gawronski** stated that habitats would be assigned for these species.

- **Amy Phillips** asked when looking at a Corridor, do you look at the total (all segments).

- **Ryan Jorgenson** asked what the team would do if there was an endangered species found in a corridor.

- **Martin Gawronski** stated that we look at all the segments to make up and entire corridor. In addition, he added that depending on species type, relocation may be possible depending on the number of individuals and habitat type.

- **Marianne Gengenbach** asked if the analysis would include the fragmentation that may be caused.

- **Martin Gawronski** replied that habitat can be described for plants and animals and fragmentation would be important depending on species and whether they are migratory or isolated.

- **Commissioner Goodin** stated that the fence around Whiting already causes fragmentation.

- **Bryan Yates** asked if there is a requirement to evaluate indirect effects, for example effects to downtown Milton. The owners of the historic buildings may not like other corridors if they lose business and cannot find renters.

- **Commissioner Goodin** asked what the shelf life of a PD&E study is. Peggy Kelley stated that around 15 years, reevaluation would be necessary.

- **Ryan Jorgenson** added that the City would agree that this will become 2 different projects. Commissioner Goodin added that this would be 2 different projects and that it is good to expand this study to collect more information.

- **Bryan Yates** added that he is working with DOT on several projects throughout Milton and that this study should look at the roadway system as the approach.

- **Nancy Model** asked to what extent the economic benefits would be evaluated. John Flora replied that the PD&E process does look at economic analysis to some extent.

- **Brian Yates** asked about the primary mission for Whiting Field. Randy Roy answered by stating that the mission is naval air training, mostly with helicopters.

- A question was asked about what the Navy bases comments are on Corridor 3. **Randy Roy** said that base is concerned about retention ponds and the accident potential areas. In addition, there will be limited lighting allowed on the roads.

- Commissioner Goodin stated that the County would favor a limited access roadway.

- Randy also added that a roadway will limit the base expansion to the North.

John Flora ended the meeting for the field review.

3.6 Public Corridor Meeting

A Corridor Public meeting was held at the Santa Rosa Auditorium on January 27, 2011. All elected officials and property owners in the affected areas were invited. We sent out 686 invitations to property owners who were within 300ft of the centerlines of the corridors. 149 people attended the meeting for a total of 22%.

- We received 10 comments through both the website email and regular mail. Some of the comments were split between two different routes which they prioritized. The following is a breakdown of responses:

  1) The engineering plan must provide an extra right lane on Hwy 90 and Hwy 87 South, as we turn right from Hwy 90 (going east) to Hwy 87S. There must be a right extra lane for Punjob Road. Punjob Rd is 200' south of Hwy 90 and 87S. Please send me the name and telephone number of the Engineering firm designing the road layout. (*a traffic analysis was performed*)

  2) If at all possible, we would like the Blackwater Heritage Trail to be undisturbed, since we bike there several times monthly and consider it Milton's greatest asset.

  3) In trying to determine the best option for a hurricane evacuation route, options 1 and 2 do not move the traffic far enough north. They both will cause congestion and bottleneck traffic where they interect with Hwy 87/89. The best option is Corridor 3. It provides the most northern route which moves traffic away from congestion as traffic moves north on Hwy 87. Also, Corridor 3 opens a route through the northern part of the county and would provide additional access for Whiting Field. It would also provide a more direct route for commercial traffic from I65 to the Industrial Complex off Hwy 90 in East Milton.

  4) I fully support Corridor #1. Thank you for holding public meeting to explain the project and have all of the information available.

  5) The map on the handout should be on a separate 8 ½ x 11 sheet. It is very difficult to read.

  6) The Morton Cemetary is located on Pat Brown Road and is a historical site. Jefferson Morton one of the founders of Milton is buried there as many other citizens of Milton and Santa Rosa county. I would not like to see this site

disturbed. Why not plan for 4 lanes vs. 2 lanes. By the time this project is complete, we will probably need 4 lanes.

7) I would like to request a map of the proposed road.

8) Your planned Corridor #1 makes the most sense. Less intrusive, shortest route, and probably less expensive. I hope you proceed with this corridor.

9) The City of Milton resubmitted their previous comments.

10) I would like to know exactly where the right of way boundaries will be on the north side of Oakland Dr. and how it will affect my property. I have a cemetary in my front yard. It is quiet and peaceful here and not much traffic. I would also like to have all the property ID numbers and contact information for each proposed corridor. I would like all information mailed to me as soon as possible.

3.7 Alternatives Meeting

An Alternatives Public workshop was held at the Santa Rosa Auditorium on August 16, 2011. All elected officials and property owners in the affected areas were invited. We sent out 686 invitations to property owners who were within 300ft of the centerlines of the corridors. There were 86 people in attendance at the meeting, for a total of 13%.

- We received 25 comments through both the website email and regular mail. We asked everyone to mark a preffered route; Alternative 1, Alternative 2 or Neither. The following is a breakdown of responses:

1) Alternative 1. The City of Milton resubmitted their previous comments.

2) Proposal 2a needs to be moved away from the entrance to Harvest Point as there will likely be 400-500 homes in this subdivision all competing for the proposed traffic light. Please go 650 feet north or about 1300 to the north line of our property. This will be far less intrusive and less expensive for DOT. We have a paved road of about 1000 ft along your proposed path that we will lose use of. On north side of property there is a parcel left along the holding pond for a road. Thank you for your consideration.

3) Please send a copy of “boards.” Mostly concerned with south section.

4) Alternative 1. Out of the alternatives, I prefer Alternative 1 as it will best serve the most urbanized area and not encourage urban sprawl. As the closest route to the City of Milton, Alternative 1 will provide a strong connection to job centers at the Santa Rosa County Industrial Park and Jail Complex. I commend the planning effort to date related to pedestrian and bicycle features, connectivity, and safety. The inclusion of a multiple use path and bike lanes will provide alternative forms of transportation corridors within the area and the job centers. Please keep these features in the future plans for the road and do so for the entirety of the road. One improvement I would recommend for the corridorand that is to have the Blackwater Heritage State Trail cross the new road by means of an underpass or overpass. Requiring an at grade crossing would be an unnecessary safety flaw on the design of the road. As a major recreational trail in Santa Rosa County I highly encourage the design of a crossing for the trail either under or over the road. Thank you for the opportunity for input.

5) Alternative 1. I also like the Urban plan that provides biking and walking trails to the roadway itself. I think Alternative 1 is the best choice. This was a good public workshop. Thank you.

6) Alternative 2. This was a frustrating meeting. Ten minutes total, the first two of which was ruined by rude people talking in the back of the room. Why were not questions addressed from the floor? Many of the same questions could have been answered simultaneously. I did get my questions answered by a young man from Marianna. I see this as an asset for storm evacuation from the south of the county but as a general relief from US 90 traffic, I don't think it will be greatly utilized. Looking at the timeline, is the next public hearing in 2013? And, last but not least, I would strongly oppose the use of Federal funds to build this road. $ from Washington has got to stop.

7) Alternative 2. Seems logical to me that the farther north this can go the less impact it will have on local traffic roads, etc.

8) Alternative 2. 2a should be used for the following reasons: (1) Ic dead-ends into SR 89N. If a hurricane evacuation is needed, there will be tremendous conjestion and delay in going north up 87N. (2) If 2a is used, traffic would have 2 roads directly to use going north, i.e. 87 N and 89N. Also, if traffic finally becomes too severe, an overpass could be constructed over 87N onto 89N and

avoid highway conjestion from a hurricane. If 1c is used, no second road way be available to accept hurricane traffic without first going through a conjested residential area where a Walmart store may be constructed.

9) Alternative 2. I live in Milton. I believe that the best option for the evacuation route is 2a the northern route. The lower route (1c) will increase traffic through more populate residential areas, not only during the evacuation process, but routinely as well. I would be directly impacted by the more southern route on a daily basis with people using Oakland, Kembro, Twilight Dr. and Cherokee as a cut through to Pine Blossom and from there either north or south. This path through the residential areas is a common shortcut and would increase significantly should the connector dump into the intersection of 87/89 and Oakland Dr.

10) Alternative 1 and 2. (1) Cross walk for trail is not safe. At grade does not provide safe passage for 2 (splitlane) or 4 lane crossing of state trail. Elevate or bridge over. (2) historic SR1 crossing needs better design with safety medium or over/under. Need to plan to the future with 4 lanes and turn lanes. Just painting lines on the cement is not good enough. (3) I like the separate walkway with grass area between road and walkway – good design.

11) I am writing in regards to the SR 87 Connector Project. I am NOT in favor of either of the two remaining alternatives. Rather.... I am in favor of a southern alternate route. Even though the routes that constituted a southern alternate have been removed, it is my hope that the FDOT will look more closely at this issue and realize that a huge mistake has been made by eliminating it. The two remaining alternatives are further north of town, and would ultimately result in more negative urban sprawl. This would impact sensitive wet lands and create more commercial development near NAS Whiting Field. Such development is not only incompatible with the base's mission, but it also threatens its mission. (The base is the key economic back bone of Milton). In addition, a southern alternate was identified as the most cost effective and would offer more, far reaching transportation solutions, benefiting both Hwy. 87 and 90. A southern alternate was ranked as having the least impact on the environment. Ironically, the southern alternate was omitted from the study because it crosses Florida Forever lands. This can very easily be mitigated by Florida state policy. However, this was never pursued, despite the route being more cost effective and more beneficial to the community overall. Why was this? The southern

alternate was even chosen as the preferred route in a city wide survey by a two-thirds majority. This was in large part due to connectivity but also the protection the route offers to the Milton Historic District. Plus, being closer to town it will not perpetuate as much sprawl. There are many unanswered questions as to why this route was not included in this part of the study, when it is such a positive selection. More consideration must be given to a southern alternate of some kind. Thank you!

12) Neither. (Southern Route) Each of these routes has many environmental impacts. Cost much more and will make the Blackwater Heritage Trail unsafe to travel at Munson Highway. There needs to be an under or over pass for the trail if one of these routes is chosen. We need a southern route around downtown Milton. Get truck traffic off Hwy 90. Have the old Bagdad Hwy. Southern route cut south of Henry St. to Ward Basin Rd so the traffic can get to I-10. This would be less of an environmental impact than either of the alternatives. No four lanes down Hwy 90 in downtown Milton or pairs down Hwy 90 and Berryhill Rd. The City of Milton council has voted several times to endorse the southern route. A citizens' survey was taken by the city with a two to one majority for the southern route. Please consider all alternatives before choosing just #1 or #2.

13) Neither. (Southern Route) Public input was seemingly ignored by the consultant who seemed to be against preferred southern route from beginning.

14) Neither. (Southern Route) The vast cost and environmental issues it will cause in the area of the proposed alternative 1 and alternative 2, there are bald eagles, gophers, and flatwood salamanders.

15) Neither. (Southern Route) In a city survey, citizens favored the southern route 2 to 1. It was also the most economical.

16) Neither. (Southern Route) Milton needs to keep the connection to stay in Milton so it will continue to grow and revitalize. It will also help the levels of traffic on several roads, and it makes the most sense financially.

17) Neither. Please put the southern route back on there for businesses in downtown Milton.

18) Neither. Please consider the other route because we need the traffic in front of our local businesses.

19) Neither. Please consider the southern route again. Downtown businesses needs the traffic.

20) Neither. Need the road downtown to promote local businesses.

21) Neither. Not using southern route takes too much business off Hwy 90.

22) Neither. The vast wildlife in the area is nothing less than pristine. The negative impact on Blackwater River would be terrible to our local environment.

23) Neither. Southern route is preferred. With both Alternative 1 and Alternative 2, downtown businesses will be bypassed all together. Southern route allows a faster route without avoiding the area altogether. Northern routes encourage sprawl and development in an area around NAS Whiting Field we are "supposedly" trying to protect.

24) Neither. The bypass would be detrimental to the business community and a tollway would not be cost efficient.

25) Neither. With the planned paths near Whiting Field you are destroying a forest along with causing urban sprawl near the base.

3.8 Conclusions

SR 87 Connector PD&E Study
Public Comment Summary

FM #s: 4167483-22-01, 4167483-22-02, 4167484-22-01, 4167484-22-02, and 4167484-22-90

ETDM#: 12587

A series of three public meetings have been held regarding the SR 87 Connector PD&E Study. They include: the Public Kick-off Meeting, March 23, 2010; the Public Corridor Alternatives Meeting, January 27, 2011, and the Alternatives Public Workshop, August 16, 2011. The results of these meetings are as follows:

Public Kick-off Meeting, March 23, 2010

Meeting Purpose: The Kick-off Meeting was to introduce the public to the project. The meeting outlined the Project Description and the Purpose and Need for the Study. It introduced the potential corridors being evaluated, as well as, identified the various project issues. The public was encouraged to provide any input they might have regarding the corridors and project issues.

Synopsis: In addition to the public official, and agency notifications, 490 property owner invitation letters were sent. There were 156 attendees at the meeting, and 19 comments received.

The comments received reflected the greatest support for the southern corridors, 4, 5, and 6. There were a number of residents that were affiliated with the organization Main Street Milton. Main Street Milton's objective is to best preserve the historic resources of Milton. These resources are currently being degraded due to the excessive traffic volumes on US 90. Aside from the Main Street Milton attendees, the next most strongly supported corridor was Corridor 3, primarily to its hurricane evacuation attributes.

Corridor Meeting, January 27, 2011

Meeting Purpose: The primary purpose of this meeting was to provide the public with the results of the corridor analysis, and solicit input on corridor preferences. It was announced at this meeting that the southern corridors may not prove to be a viable alternative due to the disputes received from the ETDM review. It was noted that FHWA would make the final determination.

Synopsis: 686 invitation letters were sent to property owners. There were 149 attendees at the meeting, and 10 written comments were received. Most of the oral comments support either Corridor 1, or Corridor 3.

Alternatives Workshop, August 16, 2011

Meeting Purpose: To provide the public with the findings of the alternatives analysis and solicit input on preferences. It was announced at this meeting that FHWA had officially removed the southern corridors, and Corridor 3 from any further consideration due to their fatal flaws associated with their impacts to Florida Forever Lands.

Synopsis: 686 property owner invitations were sent. There were 86 attendees at the meeting. There were numerous oral comments made, and 25 written comments. Although it had been explained why the southern corridors had been eliminated, by far the majority of the comments were in favor of the southern corridors. Again there were a large percentage of individuals associated with Main Street Milton who collectively were in favor of the southern corridors. Nearly 60% of the written comments were in favor of the southern corridors.

Among the remaining residents, both Alternatives 1 and 2 were nearly equally supported with only a slight majority in favor of Alternative 2. Both the County and the City reiterated their endorsements for Alternative 1.

VII. PUBLIC HEARING FOLLOW UP

The following procedures will occur after the public hearing:

Responses: Responses to all letters received as a result of the hearing and questions and comments not answered at the public hearing will be made in writing.

Recommendation Notice: A legal notice announcing the Federal Highway Administration's (FHWA's) approval of the final document and recommendations will be published in the *Pensacola News Journal* newspaper. In addition, news items detailing the Department's recommendations to FHWA will be provided to local media.

Public Hearing Transcript Package: A Transcript Package will be produced and submitted following the Public Hearing. The Transcript Package will include a verbatim hearing transcript prepared by an approved court reporter, an errata sheet detailing any transcript discrepancies, a copy of all correspondence received by the Department as part of the public hearing record and affidavits of publication for newspaper ads advertising the hearing.

Comments and Coordination Report: A *Comments and Coordination* Report will be produced and submitted at the conclusion of the study in a bound booklet with a cover, containing, at a minimum, all documentation regarding public participation performed throughout the study period. This report shall include all comments and responses received from the public as well as Advance Notification, coordination with local officials and agencies, and public meetings, the verbatim transcript from the Public Hearing, proof of publication of legal ads, sign-in sheets, public hearing certification, and all public correspondence. A summary of the Public Involvement Report shall be included with the final engineering documents.

Appendix K: Value Engineering Report

VALUE ENGINEERING STUDY

OF

SR 87 Connector

From US90/SR87S Intersection

North to SR87N

Santa Rosa County

FM: 416748-3

VE Study No: 1300304

January 14-17, 2012

This study has been performed in accordance with current FDOT Value Engineering Procedures and Techniques

VALUE ENGINEERING STUDY
TEAM LEADER

KEITH ALAN HINSON, P.E.
FLORIDA REGISTRATION No. 51966

Table of Contents

Table of Contents 2
Executive Summary 7
Summary of Approved Savings 7
Secretary Approval Form 8
Team Members 9
Resources 10
Project Description 11
Description 12
Description 13
Value Engineering Methodology 14
Cost Model 15
Function Analysis 18
Speculation / Evaluation 19
VE Idea 1 20
Description 20
Planned Detail vs. VE Idea Detail Station 257+00 21
Planned Detail vs. VE Idea Detail Clear Creek Bridge 22
Calculations for Alternate 1 23
Cost Comparison Alternate 1 24
Calculations for Alternate 2 25
Cost Comparison Alternate 2 26
VE Idea 2 27
Description 27
Planned Detail vs. VE Idea Detail Station 257+00 28
Planned Detail vs. VE Idea Detail Clear Creek Bridge 29
Calculations for Alternate 1 30

Cost Comparison for Alternate 1 31
Calculations for Alternate 2 32
Cost Comparison for Alternate 2 33
VE Idea 3 34
Description 34
Planned Detail vs. VE Idea Detail (Urban) 35
Planned Detail vs. VE Idea Detail (Suburban) 36
Planned Detail vs. VE Idea Detail (Bridges) 37
Calculations for Alternate 1 38
Cost Comparison Alternate 1 (Urban) 39
Cost Comparison Alternate 1 (Suburban) 40
Calculations for Alternate 2 41
Cost Comparison Alternate 2 (Urban) 42
Cost Comparison Alternate 2 (Suburban) 43
VE Idea 4 44
Description 44
Planned Detail vs. VE Idea Detail (Urban) 45
Planned Detail vs. VE Idea Detail (Suburban) 46
Planned Detail vs. VE Idea Detail (Blackwater Bridge) 47
Planned Detail vs. VE Idea Detail Station 257+00 48
Planned Detail vs. VE Idea Detail Clear Creek Bridge 49
Calculations for Alternate 1 (Urban) 50
Cost Comparison Alternate 1 (Urban) 51
Calculations for Alternate 1 (Suburban) 52
Cost Comparison Alternate 1 (Suburban) 53
Calculations for Alternate 1 54
Cost Comparison Alternate 1 55
Calculations for Alternate 2 56
Cost Comparison Alternate 2 57
VE Idea 5 58
Description 58

Planned Detail vs. VE Idea Detail (Urban) 59
Planned Detail vs. VE Idea Detail (Suburban) 60
Planned Detail vs. VE Idea Detail Blackwater Bridge 61
Planned Detail vs. VE Idea Detail Station 257+00 62
Planned Detail vs. VE Idea Detail Clear Creek Bridge 63
Calculations for Alternate 1 Urban 64
Cost Comparison Alternate 1 (Urban) 65
Calculations for Alternate 1 (Suburban) 66
Cost Comparison Alternate 1 Suburban 67
Calculations for Alternate 1 68
Cost Comparison for Alternate 1 69
Calculations for Alternate 2 70
Cost Comparison for Alternate 2 71
VE Idea 6 72
Planned Detail vs. VE Idea Detail (Urban) 73
Planned Detail vs. VE Idea Detail (Suburban) 74
Planned Detail vs. VE Idea Detail 75
Calculations for Alternate 1 (Urban) 76
Calculations for Alternate 1 (Suburban) 77
Cost Comparison Alternate 1 78
Calculations for Alternate 2 (Urban) 79
Calculations for Alternate 2 (Suburban) 80
Cost Comparison Alternate 2 81
VE Idea 7 82
Planned Detail vs. VE Idea Detail (Urban) 83
Planned Detail vs. VE Idea Detail (Suburban) 84
Planned Detail vs. VE Idea Detail Blackwater Bridge 85
Planned Detail vs. VE Idea Detail Station 257+00 86
Planned Detail vs. VE Idea Detail Clear Creek Bridge 87
Calculations for Alternate 1 (Urban) 88
Cost Comparison Alternate 1 (Urban) 89

Calculations for Alternate 1 (Suburban) 90
Cost Comparison Alternate 1 (Suburban) 91
Calculations for Alternate 1 92
Cost Comparison Alternate 1 93
Calculations for Alternate 2 94
Cost Comparison Alternate 2 95
Planned Detail vs. VE Idea Detail (Urban) 96
Planned Detail vs. VE Idea Detail (Suburban) 97
Planned Detail vs. VE Idea Detail 98
Calculations for Alternate 1 (Urban) 99
Calculations for Alternate 1 (Urban) 100
Cost Comparison Alternate 1 (Deletion of 5’ Sidewalk) 101
Calculations for Alternate 2 (Urban) 102
Calculations for Alternate 2 (Urban) 103
Cost Comparison Alternate 2 (Deletion of 5’ Sidewalk) 104
VE Idea 8 105
Planned Detail vs. VE Idea Detail (Urban) 106
Planned Detail vs. VE Idea Detail (Suburban) 107
Planned Detail vs. VE Idea Detail 108
Calculations for Alternate 1 (Urban) 109
Calculations for Alternate 1 (Urban) 110
Cost Comparison Alternate 1 (Deletion of 5’ Sidewalk, except bridges) 111
Calculations for Alternate 2 (Urban) 112
Calculations for Alternate 2 (Urban) 113
Cost Comparison Alternate 2 (Deletion of 5’ Sidewalk, except bridges) 114
VE Idea 9 115
Planned Detail vs. VE Idea Detail 116
Cost Comparison for Alternate 1 117
Cost Comparison for Alternate 1 118
Cost Comparison for Alternate 1 119
Design Observations 120

Summary 121
Value Engineering Resolution Meeting Decisions 122
Cost Comparison for VE Idea 2 Revised..... 123
Implementation Plan 124

Executive Summary

This report documents the results of the Value Engineering Study for SR 87 Connector located in Santa Rosa County. The Value Engineering Study was performed by the Florida Department of Transportation, District Three in Chipley, FL during the week of January 14-17, 2013. The Value Engineering Team was led by the District Value Engineer, Keith Alan Hinson, P.E.

The study was conducted during the PD&E stage of development. FHWA requirements for this project involved presenting two different alternates at the upcoming Public Hearing. Therefore, the Value Engineering Team studied both alternates. The original estimate for alternate 1 is $130,636,575 and the original estimate for alternate 2 is $139,201,471. Both of these figures include the right-of-way cost which is $5,497,617 for alternate 1 and $5,615,587 for alternate 2.

The total value of the Approved Value Engineering Savings in summarized in the following table:

Summary of Approved Savings

VE IDEA	$ Savings Alternate 1
2. End Multi-Use Path at Heritage Trail, No Sidewalk	$759,710
6. Eliminate 5' Sidewalk East Side Entire Project	$5,279,604
9. Use Rural Typical in lieu of Suburban	$7,448,584
Total Savings Approved by Management	$13,487,898

Secretary Approval Form

STATE OF FLORIDA DEPARTMENT OF TRANSPORTATION

VALUE ENGINEERING STUDY REVIEW

COVER SHEET

	YEAR	DISTRICT	STUDY NO.					
Value Engineering Study Number:	13	003	04	New FHWA Reporting Requirements				
Financial Project Number:	416748-3			**Safety:** Recommendations that mitigate or reduce hazards on the facility	**Operations:** Recommendations that improve real-time service and/or local corridor or regional levels of service	**Environment:** Recommendations that successfully avoid or mitigate impacts to natural and/or cultural resources	**Construction:** Recommendations that improve work zone conditions, or expedite the project delivery	**Other:** Recommendations not readily categorized by the above performance indicators
Description:	**SR 87 Connector**							

	V.E. IDEA NO.	AGREE	DISAGREE					
End Multi-Use Path at Heritage Trail, Add 5' Sidewalk	1	☐	☐	☐	☐	☒	☒	☐
End Multi-Use Path at Heritage Trail, No Sidewalk	2	☑	☐	☐	☐	☒	☒	☐
Reduce Multi-Use Path Width from 12' to 10'	3	☐	☐	☐	☐	☒	☒	☐
10' Path to Heritage Trail, Add 5' Sidewalk	4	☐	☐	☐	☐	☒	☒	☐
10' Path to Heritage Trail, No Sidewalk	5	☐	☐	☐	☐	☒	☒	☐
Eliminate 5' Sidewalk East Side Entire Project	6	☑	☐	☐	☐	☒	☒	☐
VE 4 + VE 6	7	☐	☐	☐	☐	☒	☒	☐
Eliminate 5' Sidewalk East Side, Except on Bridges	8	☐	☐	☐	☐	☒	☒	☐
Use Rural Typical in lieu of Suburban	9	☑	☐	☒	☒	☒	☒	☐

COMMENTS:

Tommy Barfield, P.E., District Secretary — 1/30/13 Date

Team Members

Name	Expertise	Phone Number
Keith Alan Hinson, P.E.	Team Leader	(850) 330-1547
Billy Best	Design	(850) 330-1715
Ray Hodges, P.E.	Construction	(850) 330-1283
Heather Bolton, E.I.	Construction	(850) 981-2802
Mike Proctor	Maintenance	(850) 981-2814
Brenda Whittington	Right-of-Way	(850) 330-1385
Alan Vann	Environment	(850) 330-1523
D.J. Barber, P.E.	Drainage	(850) 330-1441
Phillip Smith	Estimates	(850) 330-1500

Resources

Name	Affiliation	Expertise	Phone Number
Keith Shores, P.E.	FDOT	Structures	(850) 330-1449
Jimmy Miller	FDOT	Construction	(850) 330-1262
Hal Gore Jr., P.E.	FDOT	Construction	(850) 330-1713
Peggy Kelley	FDOT	PD&E	(850) 330-1517
Jessica Bloomfield, P.E.	Metric	Design	(850) 596-1526
Jim Kapinos, P.E.	FDOT	Drainage	(850) 330-1430
Ed Chadwell	FDOT	Railroad	(850) 330-1551
Steve Whittington	FDOT	Right-of-Way	(850) 330-1385
Hardy Smith	Atkins	Right-of-Way	(850) 638-2288
Scott Golden, P.E.	FDOT	Design	(850) 330-1492

Project Description

The new SR 87 Connector has two possible alternate routes at this stage of development. Therefore, both alternates were studied by the team.

Alternate 1 extends north from the US 90/SR 87S intersection crossing the Blackwater River in proximity of the existing eastern power easement crossings. Once across the river it will run parallel, or adjacent to the power easement, then connect with SR 87N in proximity of the southern split of SR 87N and SR 89 utilizing the Manning Lane right-of-way. This alternate is roughly 6.5 miles in length.

Alternate 2 extends north from the US 90/SR 87S intersection crossing the Blackwater River in proximity of the eastern most existing power easement crossing. Once across the river it will run slightly north of Alternate 1, and run adjacent to the Clear Water Creek environmental lands, where it then heads west to connect with SR 87N in proximity of the northern split of SR 87N and SR 89. This alternate is roughly 7.2 miles in length.

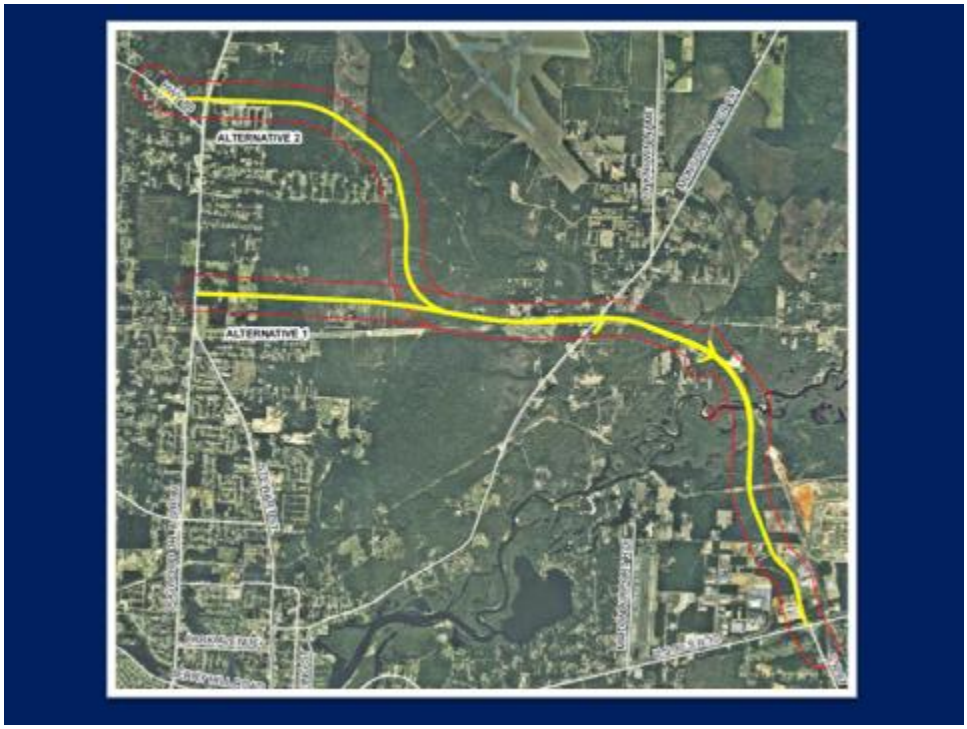

Description

It is anticipated that the new roadway will be a four lane divided highway. There will be urban and suburban sections as well as two bridges at the Blackwater River and Clear Creek.

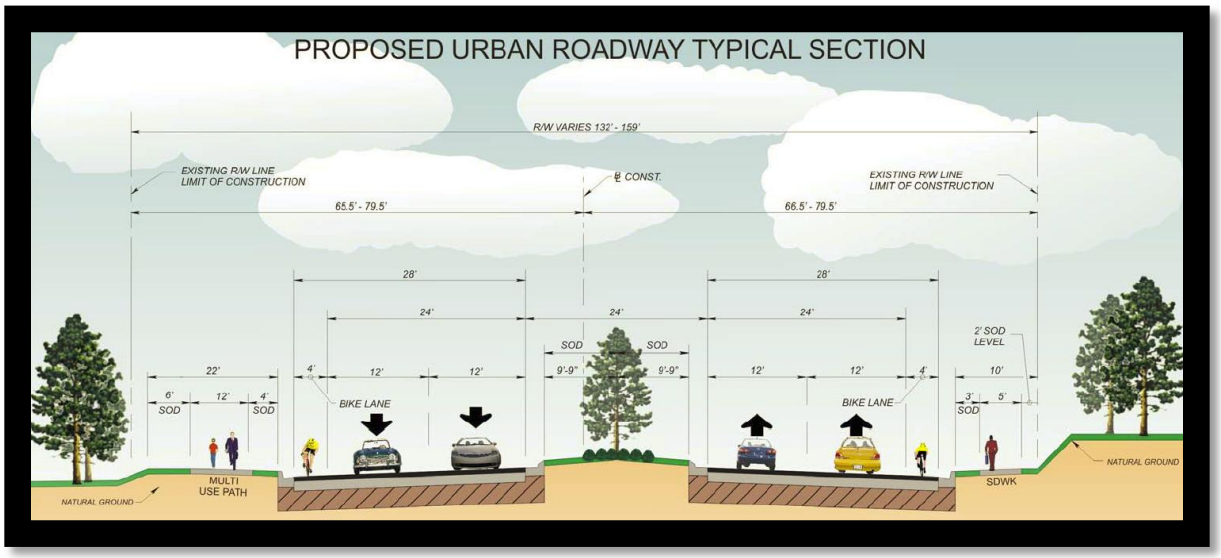

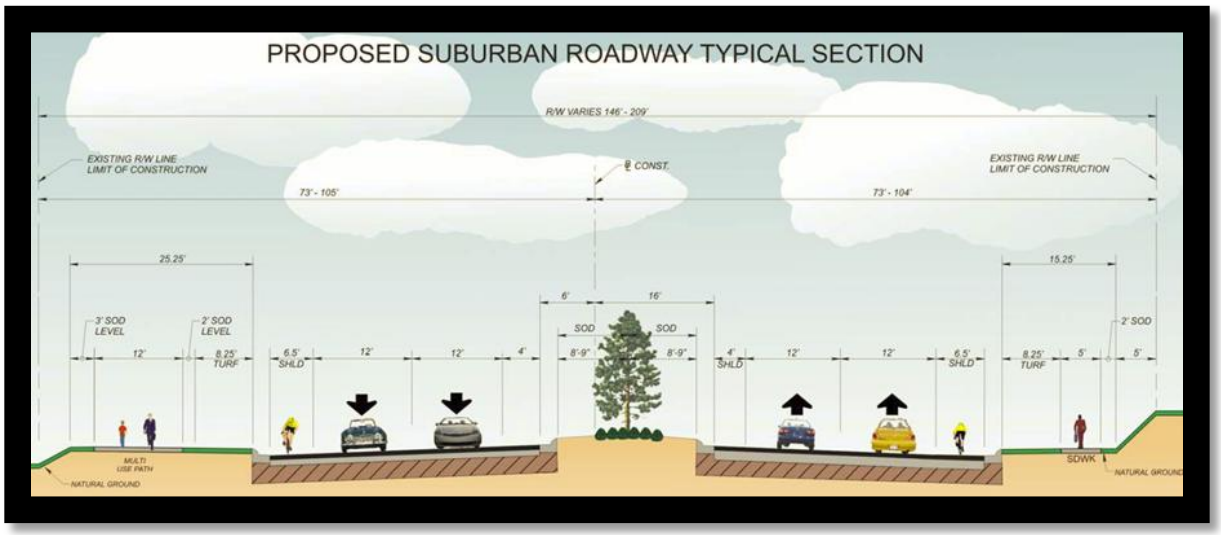

Description

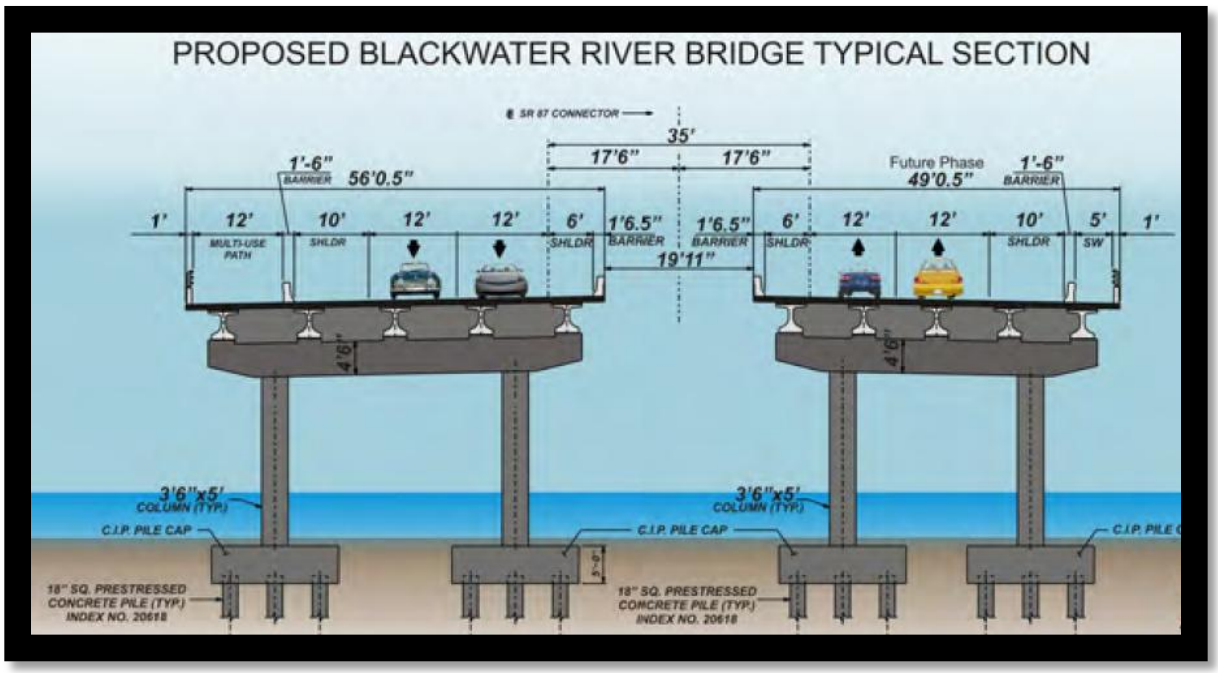

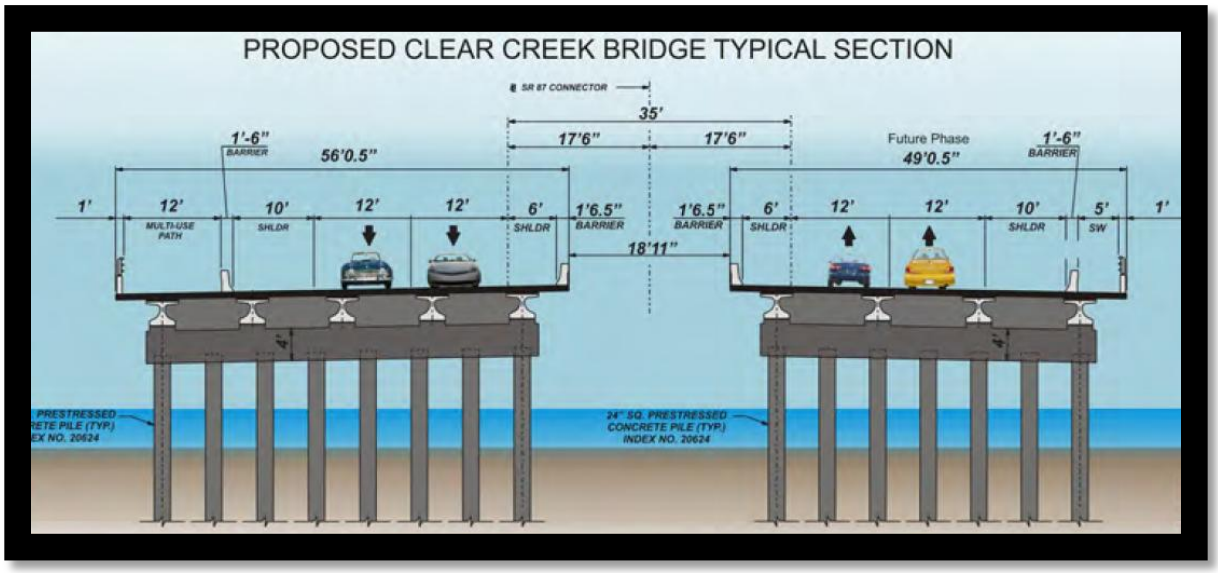

Value Engineering Methodology

The Value Engineering Team used the following 6 step job plan to conduct this analysis:

1. **Information Phase:** The team reviewed the design documents, verified the cost estimate and contacted resources to verify existing information.
2. **Function Analysis:** The team defined the project functions using a two word active verb measurable noun context and classified the functions as basic or secondary.
3. **Creative Phase:** The team used brainstorming to generate ideas that would perform the functions defined in the Function Analysis phase**.**
4. **Evaluation:** The team evaluated the ideas by consensus and determined which ideas to carry forward for development, which ideas would be presented as design suggestions and which ideas would be eliminated.
5. **Development:** Based on the evaluation, phase ideas carried forward were developed into VE recommendations or Design Observations. The development consisted of a description of the idea and a listing of the advantages and disadvantages of the proposed idea.
6. **Presentation:** The study concluded with a presentation to management.

Cost Model

Long range estimates were used for both alternates for identifying high cost items to determine focus areas for the team.

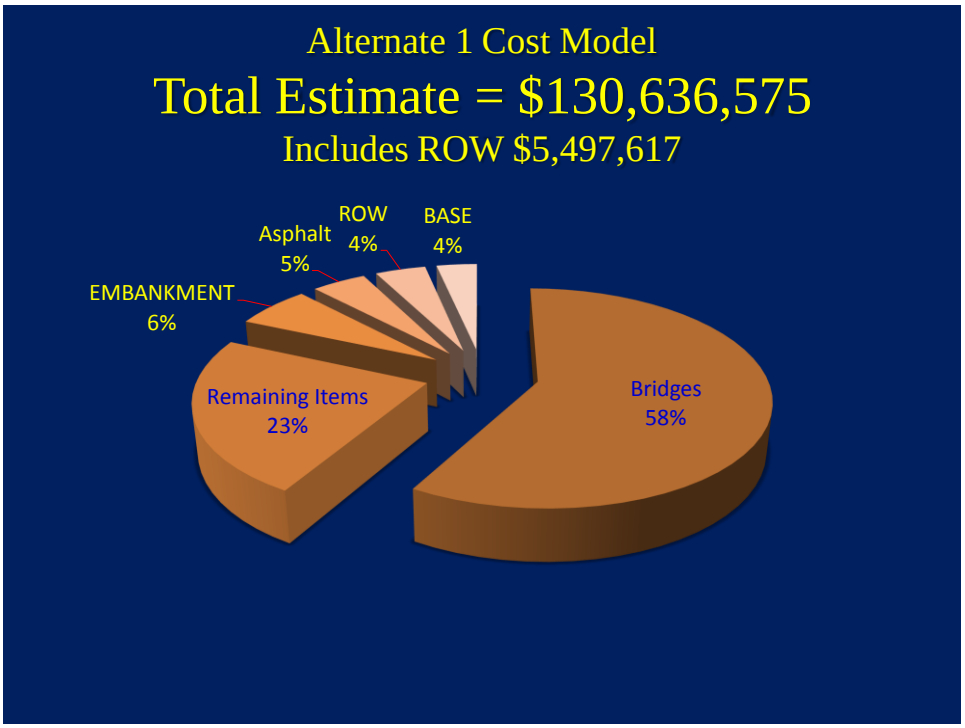

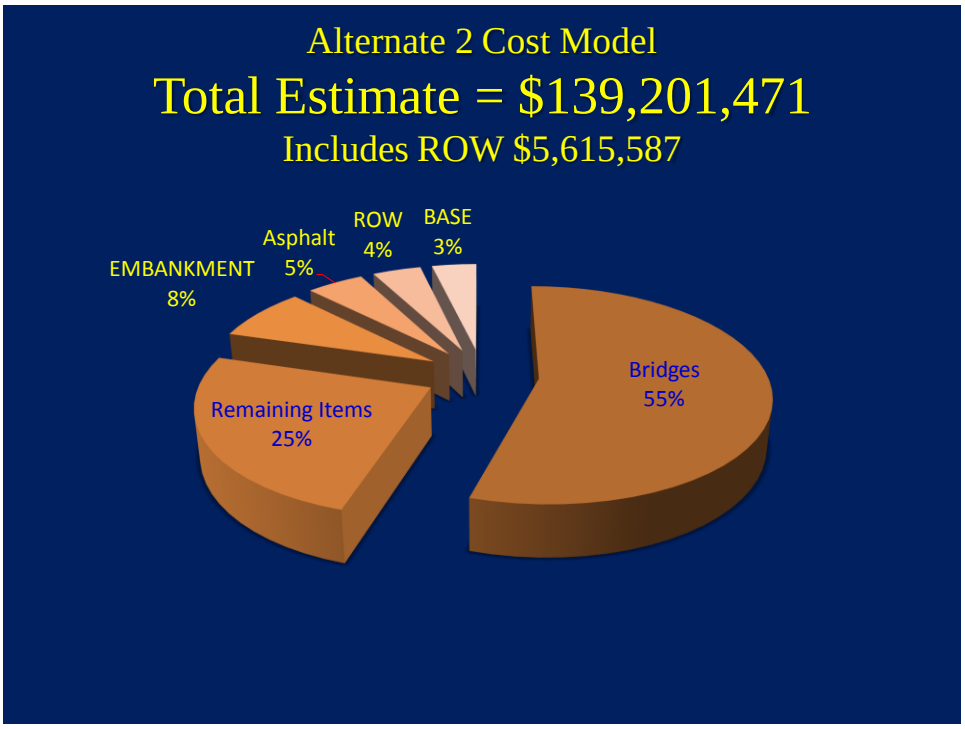

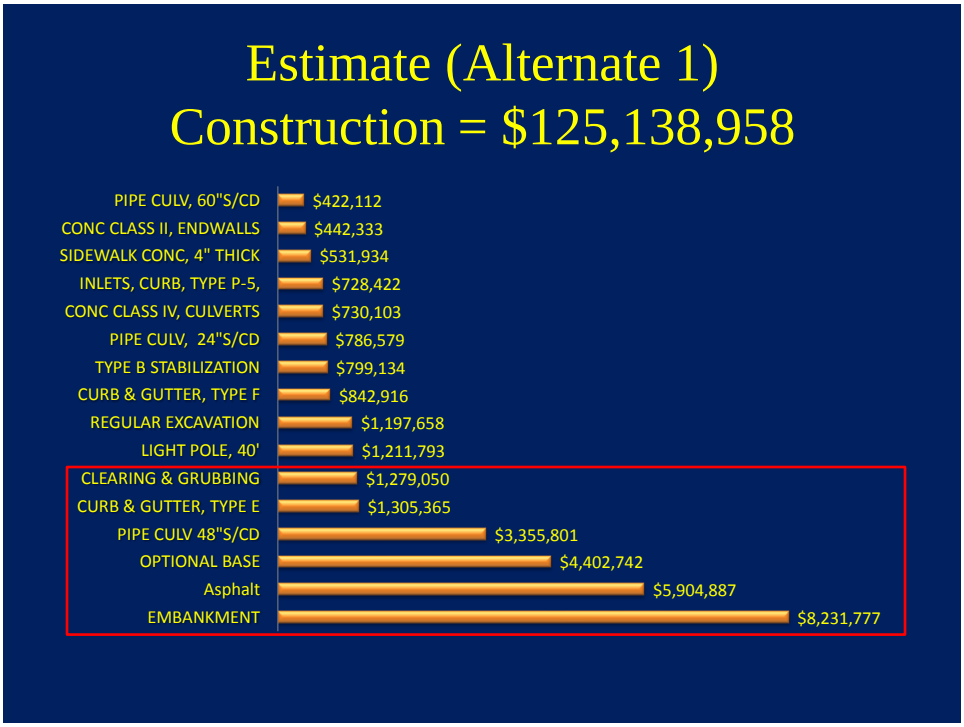
Estimate (Alternate 1)
Construction = $125,138,958
PIPE CULV, 60"S/CD $422,112
CONC CLASS II, ENDWALLS $442,333
SIDEWALK CONC, 4" THICK $531,934
INLETS, CURB, TYPE P-5, $728,422
CONC CLASS IV, CULVERTS $730,103
PIPE CULV, 24"S/CD $786,579
TYPE B STABILIZATION $799,134
CURB & GUTTER, TYPE F $842,916
REGULAR EXCAVATION $1,197,658
LIGHT POLE, 40' $1,211,793
CLEARING & GRUBBING $1,279,050
CURB & GUTTER, TYPE E $1,305,365
PIPE CULV 48"S/CD $3,355,801
OPTIONAL BASE $4,402,742
Asphalt $5,904,887
EMBANKMENT $8,231,777

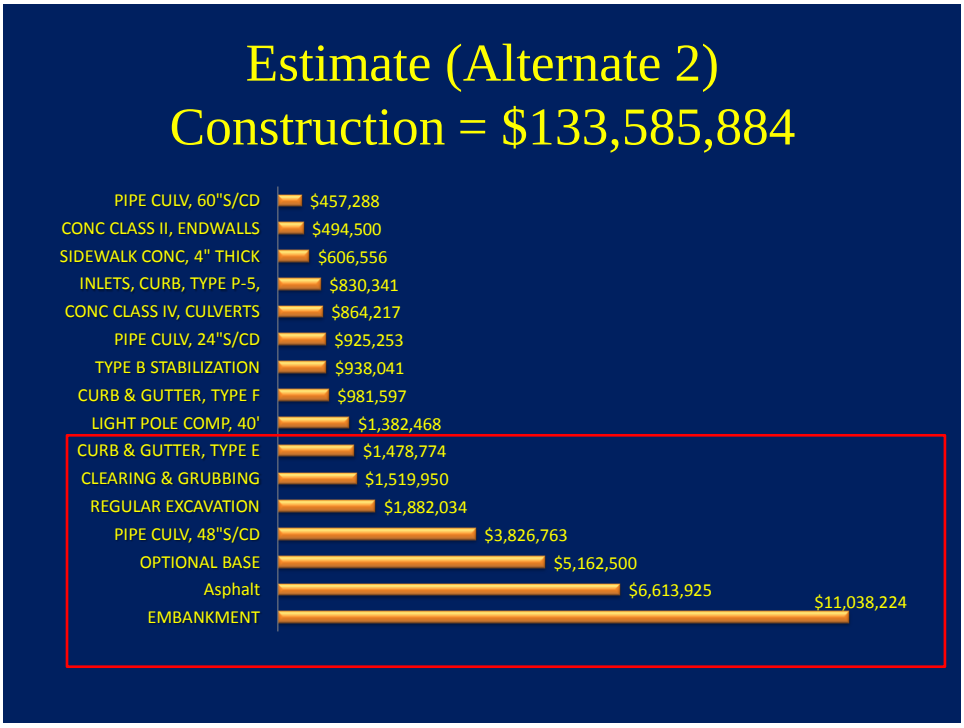
Estimate (Alternate 2)
Construction = $133,585,884
PIPE CULV, 60"S/CD $457,288
CONC CLASS II, ENDWALLS $494,500
SIDEWALK CONC, 4" THICK $606,556
INLETS, CURB, TYPE P-5, $830,341
CONC CLASS IV, CULVERTS $864,217
PIPE CULV, 24"S/CD $925,253
TYPE B STABILIZATION $938,041
CURB & GUTTER, TYPE F $981,597
LIGHT POLE COMP, 40' $1,382,468
CURB & GUTTER, TYPE E $1,478,774
CLEARING & GRUBBING $1,519,950
REGULAR EXCAVATION $1,882,034
PIPE CULV, 48"S/CD $3,826,763
OPTIONAL BASE $5,162,500
Asphalt $6,613,925
EMBANKMENT $11,038,224

Cost Models for both Alternate 1 and Alternate 2 are shown. The pie charts include Right-of-Way costs and bridge costs. The bars charts do not include Right-of-Way costs or bridge costs. After reviewing the Cost Models, the Value Engineering Team decided to focus on the following areas for potential savings:

- Bridges
- Embankment
- Asphalt
- Base
- Right-of-Way

Function Analysis

The team performed the function analysis phase preparing a list of functions by project and major components of the project. The functions were defined by the traditional verb/noun format and classified as to whether they were basic or secondary functions

Item	Verb	Noun	Basic	Secondary
Overall Project	Improve	Evacuation	B	
	Improve	Mobility	B	
	Improve	Multi-Modal		S
Bridges	Span	River	B	
	Span	Habitat		S
	Span	Heritage Trail	B	
	Span	Flood Way	B	
Right-of-Way	Provide	Alignment	B	
	Enhance	Safety		S
	Provide	Future Growth		S
	Provide	Treatment	B	
Embankment	Support	Road	B	
	Support	Path		S
Asphalt	Support	Traffic	B	
Base	Support	Roadway	B	

Speculation / Evaluation

The team brainstormed to generate the following ideas based on the defined functions and through team consensus determined whether to carry the idea forward for development, combine with another idea, eliminate the idea or change to a design observation.

Idea	Generated Ideas	Disposition
1	End Multi-Use Path at Heritage Trail, Add 5’ Sidewalk	Carry Forward
2	End Multi-Use Path at Heritage Trail, No Sidewalk	Carry Forward
3	Reduce Multi-Use Path Width from 12’ to 10’ Entire Project	Carry Forward
4	10’ Path to Heritage Trail, Add 5’ Sidewalk	Carry Forward
5	10’ Path to Heritage Trail, No Sidewalk	Carry Forward
6	Eliminate 5’ Sidewalk on east side	Carry Forward
7	Combine VE 4 & VE 6	Carry Forward
8	Consider Open drainage system	Design Observation
9	Include irrigation	Design Observation
10	Muck Issue	Design Observation
11	Right-of-Way	Design Observation
12	Bobby Brown Road, new entrance	Design Observation
13	Eliminate paving Pat Brown Road	Eliminate
14	Use existing road north of 90 for interim	Eliminate
15	Build interim roadway same slope	Eliminate
16	Urban section, 6’ sidewalk adjacent curb	Eliminate
17	Consider 5’ asphalt in lieu sidewalk	Eliminate
18	Bridge Length	Eliminate
19	Median Spacing Requirements	Eliminate

VE Idea 1

Description

Terminate the Multi-Use Path at the Blackwater Heritage Trail (Station 257+00) and construct 5 foot sidewalk for remainder of project.

Since the original intent of the multi-use path was to connect the old highway 1 brick road along highway 90 to the Blackwater Heritage Trail, this can be achieved by terminating the multi-use path at station 257+00. A new five foot sidewalk will be started at that location and continue to the end of the project at SR 87 north (station 455+15 for alternate 1). For Alternate 1, this will result in 19,635 feet reduction (455+15 – 257+00 - 180 feet for Clear Creek Bridge) of the following items in the multi-use trail: asphalt, base, stabilization, embankment, and sod. For Alternate 2, this will result in 24,620 feet reduction (505+00 – 257+00 - 180 feet for Clear Creek Bridge) of the same items mentioned for Alternate 1. The only items that will increase for both alternates are performance turf and sidewalk. The Clear Creek Bridge, which is180 feet in length, can have a reduced width of seven feet due to going from a 12 foot path to a 5 foot sidewalk.

Planned Detail vs. VE Idea Detail Station 257+00

Planned Detail

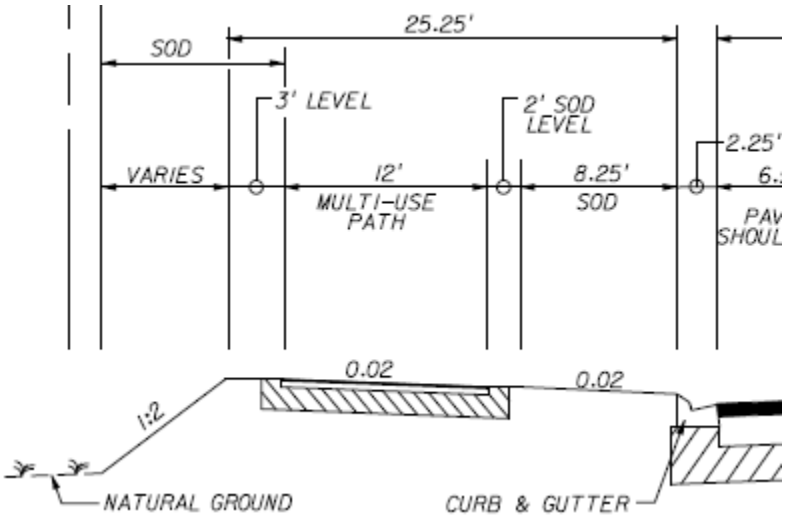

VE Idea Detail

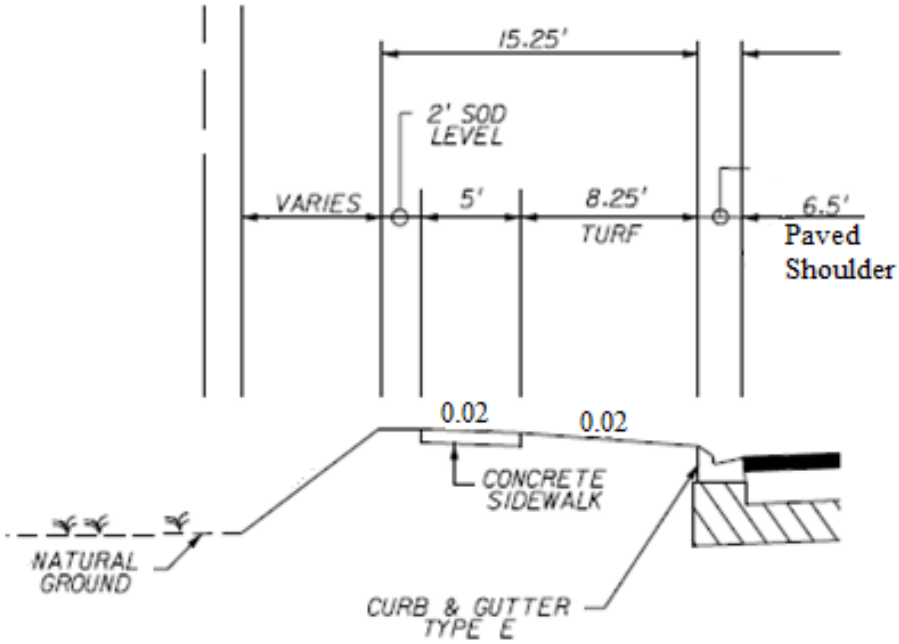

Planned Detail vs. VE Idea Detail Clear Creek Bridge

Clear Creek (Planned)

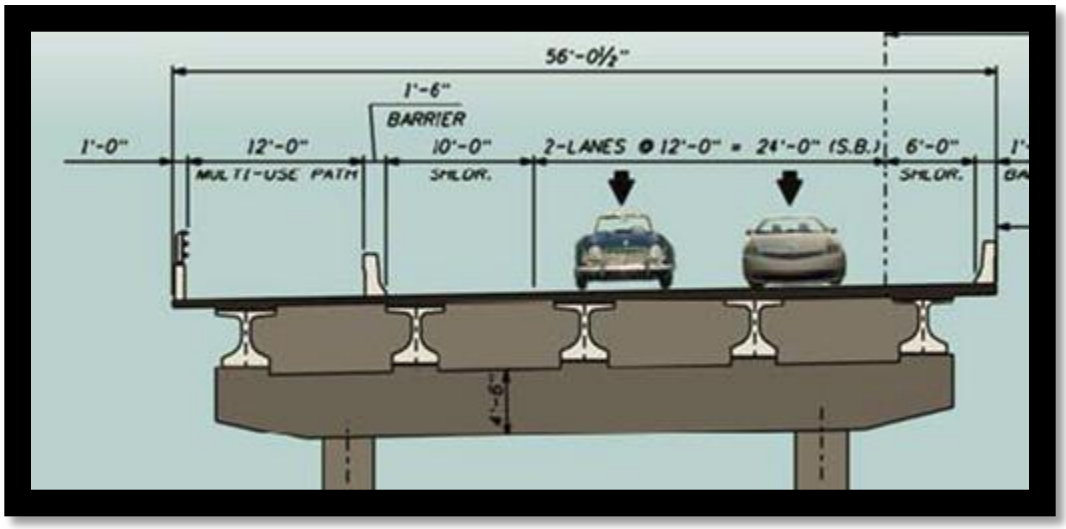

Clear Creek VE Idea Detail

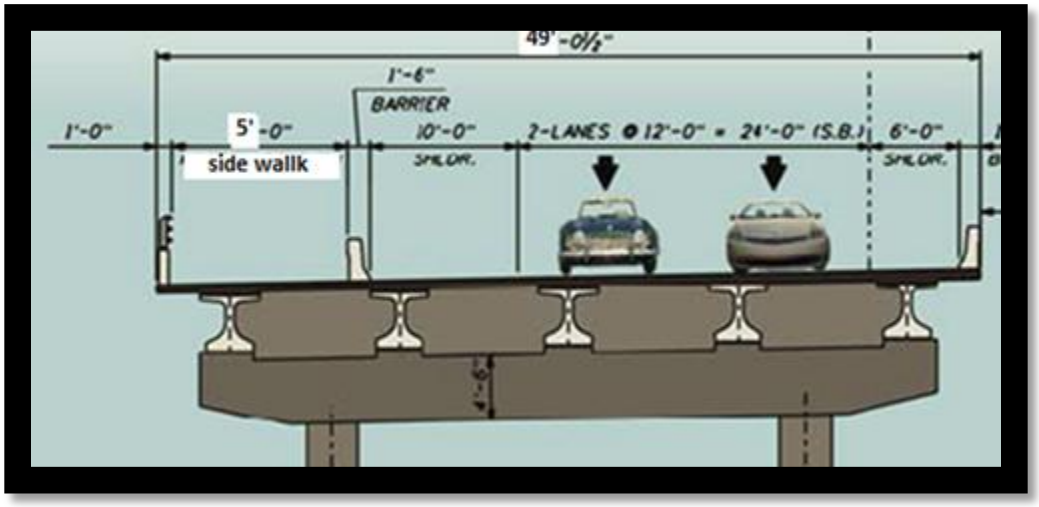

Calculations for Alternate 1

Reduction in Quantities for Alternate 1

Clear Creek Bridge 180 feet x 7 feet reduction = **1,260 SF**

Asphalt 1”= 110 lbs/SY x (1SY/ 9SF) x (1TN/2000 lbs) x 19,635 ft x 12 ft = **1,440 tons**

Base = 12ft + (2 x 4”)/12= (12.667ft x 19,635 ft)/9 SF/SY= **27,635 SY**

Stabilization = 12ft + (2 x 2’) = (16 ft x 19,635 ft) / 9 SF/SY = **34,907 SY**

Embankment= 25.25’-15.25’ = 10 ft (see typical section sheet 4)

(10ft x 4.5ft (avg. fill height) x 19,635 ft)/27CF/CY= **32,725 CY**

Sod (11.25 ft x 19,635 ft) / 9 SF/SY = **24,544 SY**

Increase in Quantities for Alternate 1

Performance Turf (8.25 ft x 19,635 ft) / 9 SF/SY= **17,999 SY**

Sidewalk (5ft x 19,635 ft) / 9 SF/SY = **10,908 SY**

Cost Comparison Alternate 1

SR 87 416748-3 Terminate Multi-Use Path at Heritage Trail add 5' Sidewalk
(ALT 1) **VALUE ENGINEERING IDEA No. 1**
COST COMPARISON SHEET

DESCRIPTION	UNITS	UNIT COST	Reduced QTY.	Reduced COST	Added QTY.	Added COST
Clear Creek Bridge	SF	$126.50	1260	$159,390		$0
Asphalt Multi Use Path	TN	$104.35	1440	$150,254		$0
Base for Path	SY	$7.60	27635	$210,027		$0
Stabilization for Path	SY	$2.27	34907	$79,238		$0
Embankment	CY	$3.96	32725	$129,591		$0
Sod	SY	$2.33	24544	$57,187		$0
Perf. Turf	SY	$0.75		$0	17999	$13,499
Sidewalk	SY	$26.96		$0	10908	$294,089
SUBTOTAL				**$785,687**		**$307,588**
MOBILIZATION (THIS IS SUB+CONTIN. X % =)		**5.0%**		$41,249		$16,148
MOT		**2.0%**		$15,714		$6,152
CONTINGENCIES		**5.0%**		$39,284		$15,379
CEI		**10.0%**		$88,193		$34,527
			-	$0		$0
GRAND TOTAL				**$970,127**		**$379,794**

POTENTIAL SAVINGS: $590,333

Calculations for Alternate 2

Reduction in Quantities for Alternate 2

Clear Creek Bridge (180 feet x 7 feet reduction)/9 SF/SY = **1,260 SY**

Asphalt 1”= 110 lbs/SY x (1SY/ 9SF) x (1TN/2000 lbs) x 24,620 ft x 12 ft =**1,805 tons**

Base = 12ft + (2 x 4”)/12= (12.667ft x 24,620 ft)/9 SF/SY= **34,651 SY**

Stabilization = 12ft + (2 x 2’) = (16 ft x 24,620 ft) / 9 SF/SY = **43,769 SY**

Embankment= 25.25’-15.25’ = 10 ft (see typical section sheet 4)

(10ft x 4.5ft (avg. fill height) x 24,620 ft)/27CF/CY= **41,033 CY**

Sod (11.25 ft x 24,620 ft) / 9 SF/SY = **30,775 SY**

Increase in Quantities for Alternate 2

Performance Turf (8.25 ft x 24,620 ft) / 9 SF/SY= **22,568 SY**

Sidewalk (5ft x 24,620 ft) / 9 SF/SY = **13,678 SY**

Cost Comparison Alternate 2

SR 87 416748-3 Terminate Multi-Use Path at Heritage Trail add 5' Sidewalk
(ALT 2) **VALUE ENGINEERING IDEA No. 1**
COST COMPARISON SHEET

DESCRIPTION	UNITS	UNIT COST	Reduced QTY.	Reduced COST	Added QTY.	Added COST
Clear Creek Bridge	SF	$126.50	1260	$159,390		$0
Asphalt Multi Use Path	TN	$104.35	1805	$188,400		$0
Base for Path	SY	$7.60	34651	$263,350		$0
Stabilization for Path	SY	$2.27	43769	$99,355		$0
Embankment	CY	$3.96	41033	$162,492		$0
Sod	SY	$2.33	30775	$71,706		$0
Perf. Turf	SY	$0.75		$0	22568	$16,926
Sidewalk	SY	$26.96		$0	13678	$368,753
SUBTOTAL				**$944,693**		**$385,679**
MOBILIZATION (THIS IS SUB+CONTIN. X % =)		**5.0%**		$49,596		$20,248
MOT		**2.0%**		$18,894		$7,714
CONTINGENCIES		**5.0%**		$47,235		$19,284
CEI		**10.0%**		$106,042		$43,292
			-	$0		$0
GRAND TOTAL				**$1,166,460**		**$476,217**

POTENTIAL SAVINGS: $690,243

VE Idea 2

Description

Terminate the Multi-Use Path at the Blackwater Heritage Trail (Station 257+00).

Since the original intent of the multi-use path was to connect the old highway 1 brick road along highway 90 to the Blackwater Heritage Trail, this can be achieved by terminating the multi-use path at station 257+00. The right-of-way will be purchased for possible addition of a multi-use path or sidewalk for the remainder of the project in the future. For Alternate 1, this will result in 19,635 feet reduction (455+15 – 257+00 - 180 feet for Clear Creek Bridge) of the following items in the multi-use trail: asphalt, base, stabilization, embankment, and sod. For Alternate 2, this will result in 24,620 feet reduction (505+00 – 257+00 - 180 feet for Clear Creek Bridge) of the same items mentioned for Alternate 1. The only item that will increase for both alternates is performance turf. The Clear Creek Bridge, which is180 feet in length, can have a reduced width of 13 feet due to eliminating the Multi-Use Path.

Planned Detail vs. VE Idea Detail Station 257+00

Planned Detail

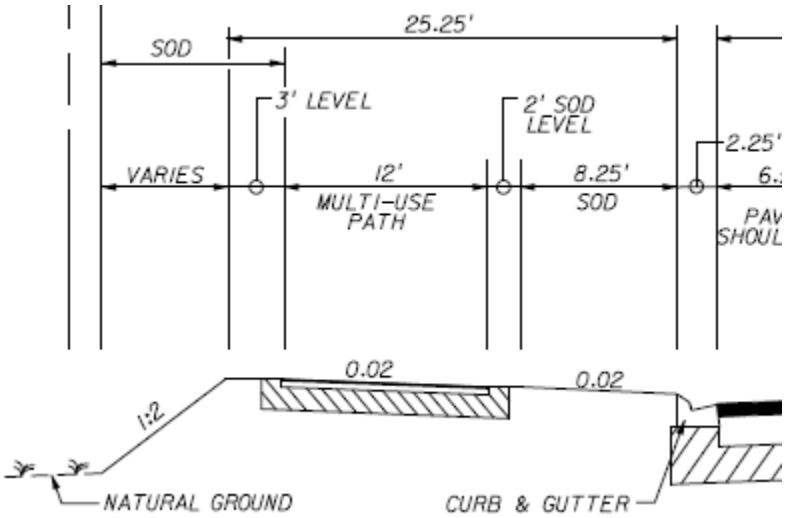

VE Idea Detail (Station 257+00 to SR 87 North)

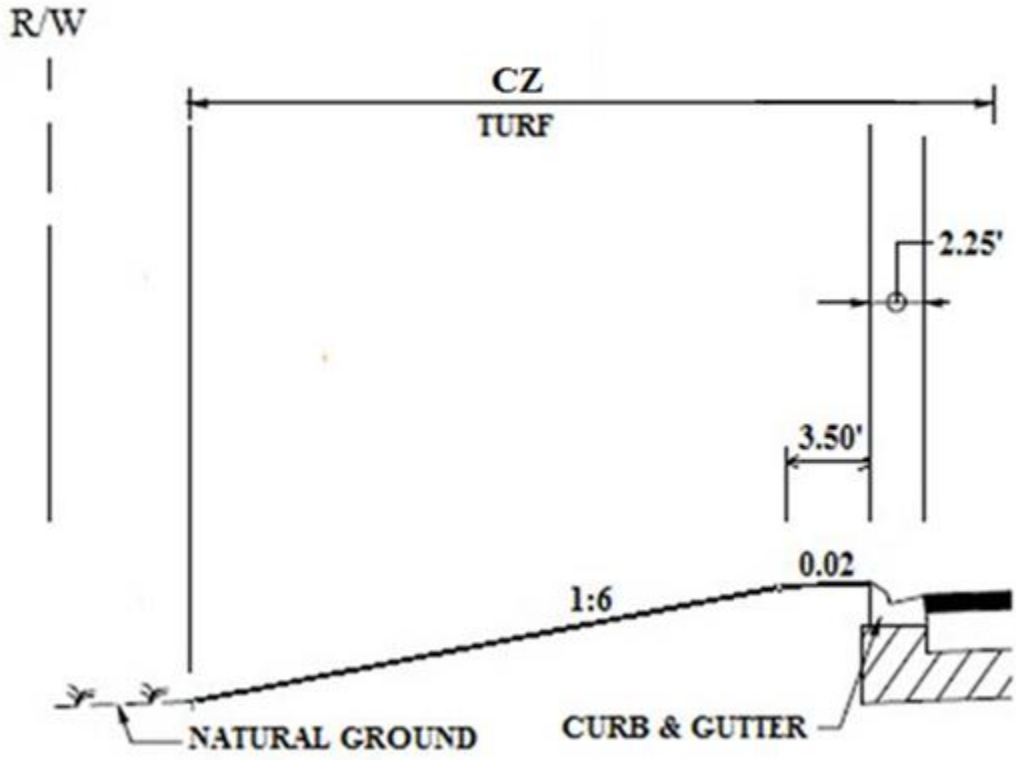

Planned Detail vs. VE Idea Detail Clear Creek Bridge

Planned Detail (Clear Creek Bridge)

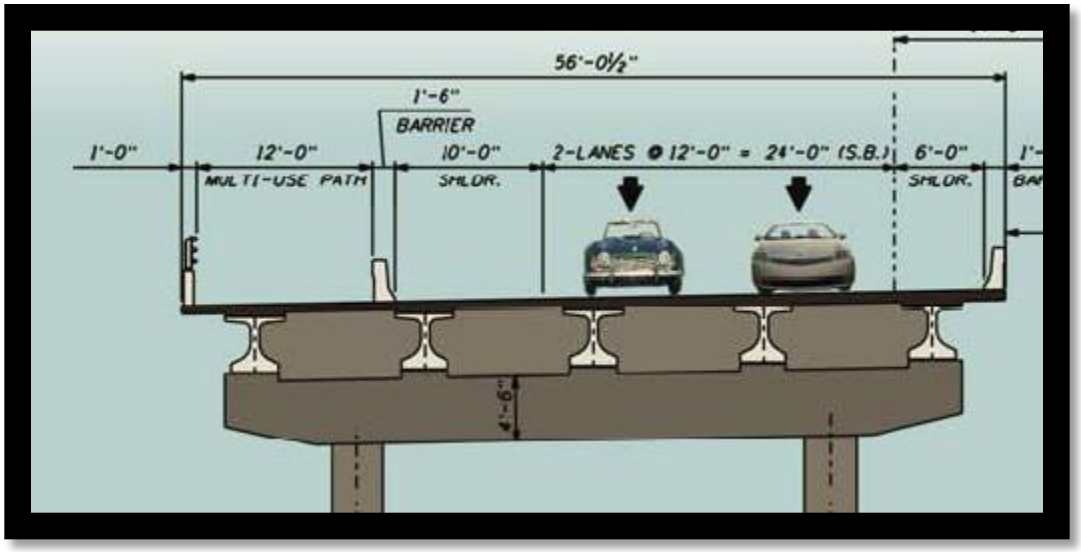

VE Idea Detail (Clear Creek Bridge)

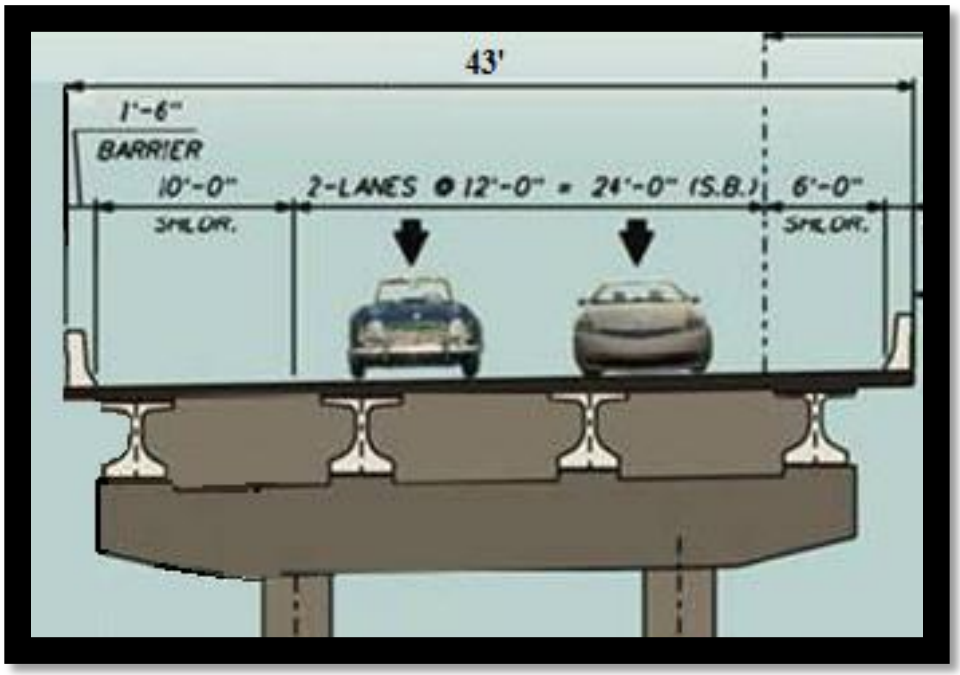

Calculations for Alternate 1

Reduction in Quantities for Alternate 1

Clear Creek Bridge 180 feet x 13 feet reduction = **2,340 SF**

Asphalt 1”= 110 lbs/SY x (1SY/ 9SF) x (1TN/2000 lbs) x 19,635 ft x 12 ft = **1,440 tons**

Base = 12 ft + (2 x 4”)/12= (12.667 ft x 19,635 ft)/9 SF/SY= **27,635 SY**

Stabilization = 12 ft + (2 x 2’) = (16 ft x 19,635 ft) / 9 SF/SY = **34,907 SY**

Embankment= [(71.2 SF-21.2SF) x 19,635 ft] / 27CF/CY = **36,361 CY**

Base Box = (12ft x 1/12ft) + (12.667ft x 4/12 ft) + (16ft x 1ft) = 21.2SF

Sod = 13.25 ft x 19,635 ft / 9 SF/SY = **28,907 SY**

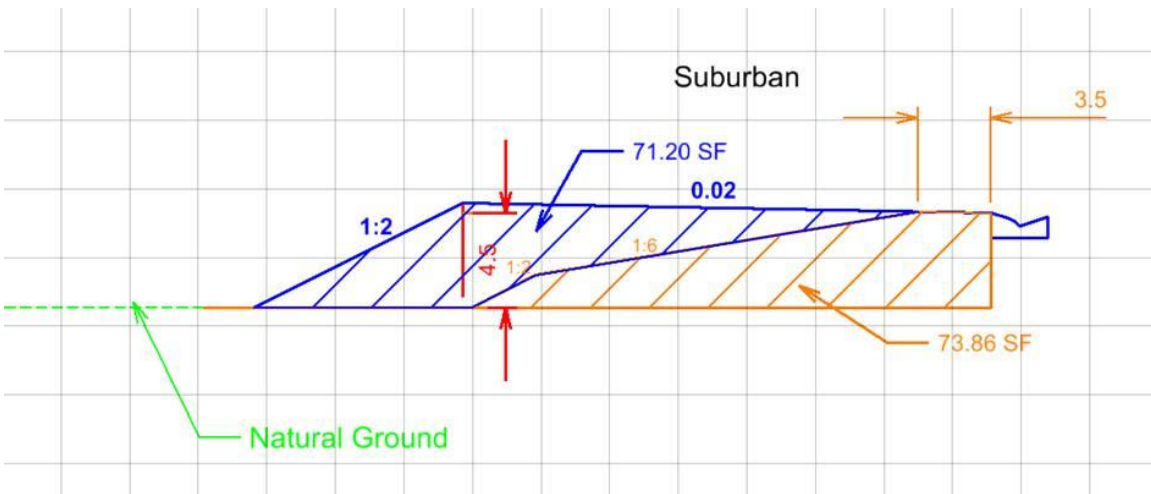

Increase in Quantities for Alternate 1

Performance Turf (21.75 ft x 19,635 ft) / 9 SF/SY= **47, 451 SY**

Cost Comparison for Alternate 1

SR 87 416748-3 Terminate Multi-Use Path at Heritage Trail
(ALT 1) **VALUE ENGINEERING IDEA No. 2**
COST COMPARISON SHEET

DESCRIPTION	UNITS	UNIT COST	Reduced QTY.	Reduced COST	Added QTY.	Added COST
Clear Creek Bridge	SF	$126.50	2340	$296,010		$0
Asphalt Multi Use Path	TN	$104.35	1440	$150,254		$0
Base for Path	SY	$7.60	27635	$210,027		$0
Stabilization for Path	SY	$2.27	34907	$79,238		$0
Embankment	CY	$3.96	36361	$143,990		$0
Sod	SY	$2.33	28907	$67,354		$0
Perf. Turf	SY	$0.75		$0	47451	$35,588
SUBTOTAL				**$946,873**		**$35,588**
MOBILIZATION (THIS IS SUB+CONTIN. X % =)		**5.0%**		$49,711		$1,868
MOT		**2.0%**		$18,937		$712
CONTINGENCIES		**5.0%**		$47,344		$1,779
CEI		**10.0%**		$106,286		$3,995
			-	$0		$0
GRAND TOTAL				**$1,169,151**		**$43,943**

POTENTIAL SAVINGS: $1,125,208

Calculations for Alternate 2

Reduction in Quantities for Alternate 2

Clear Creek Bridge 180 feet x 13 feet reduction = **2,340 SF**

Asphalt 1”= 110 lbs/SY x (1SY/ 9SF) x (1TN/2000 lbs) x 24,620 ft x 12 ft = **1,805 tons**

Base = 12ft + (2 x 4”)/12= (12.667ft x 24,620 ft)/9 SF/SY= **34,651 SY**

Stabilization = 12ft + (2 x 2’) = (16 ft x 24,620 ft) / 9 SF/SY = **43,769 SY**

Embankment= [(71.2 SF-21.2SF) x 24,620 ft] / 27CF/CY = **45,593 CY**

Base Box = (12ft x 1/12ft) + (12.667ft x 4/12 ft) + (16ft x 1ft) = 21.2SF

Sod = 13.25 ft x 24,620 ft / 9 SF/SY = **36,246 SY**

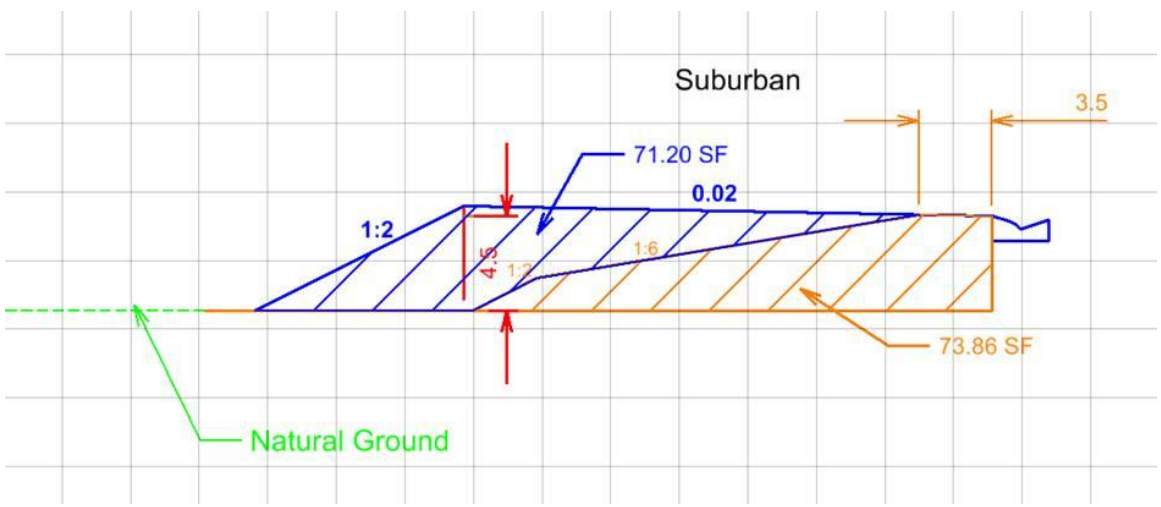

Increase in Quantities for Alternate 1

Performance Turf (21.75 ft x 24,620 ft) / 9 SF/SY= **59,498 SY**

Cost Comparison for Alternate 2

SR 87 416748-3 Terminate Multi-Use Path at Heritage Trail *(ALT 2)* **VALUE ENGINEERING IDEA No. 2** **COST COMPARISON SHEET**						
DESCRIPTION	**UNITS**	**UNIT COST**	**Reduced QTY.**	**Reduced COST**	**Added QTY.**	**Added COST**
Clear Creek Bridge	SF	$126.50	2340	$296,010		$0
Asphalt Multi Use Path	TN	$104.35	1805	$188,400		$0
Base for Path	SY	$7.60	34651	$263,350		$0
Stabilization for Path	SY	$2.27	43769	$99,355		$0
Embankment	CY	$3.96	45593	$180,547		$0
Sod	SY	$2.33	36246	$84,453		$0
Perf. Turf	SY	$0.75		$0	59498	$44,624
SUBTOTAL				**$1,112,116**		**$44,624**
MOBILIZATION (THIS IS SUB+CONTIN. X % =)		**5.0%**		$58,386		$2,343
MOT		**2.0%**		$22,242		$892
CONTINGENCIES		**5.0%**		$55,606		$2,231
CEI		**10.0%**		$124,835		$5,009
			-	$0		$0
GRAND TOTAL				**$1,373,185**		**$55,099**
POTENTIAL SAVINGS:				**$1,318,086**		

VE Idea 3

Description

Reduce the width of the Multi-Use Path from 12 feet to 10 feet for the entire length of the project. The Plans Preparation Manual allows a 10 foot Multi-Use Path in lieu of the planned 12 foot path. This will reduce quantities for embankment, stabilization, base, asphalt, and sod. This will affect both urban and suburban typical sections and reduce the width of both bridges.

8.6.2 Widths

The appropriate paved width for a shared use path is dependent upon context, volume and mix of users. Typically, widths range from 10-14 feet, with the wider values applicable to areas with high use and/or a wider variety of users (bicyclists, pedestrians, joggers, and skaters). The need to provide for larger emergency or maintenance vehicles or manage steep grades can also affect appropriate width. The minimum width for a two-directional shared use path is 10 feet. ***FHWA's Shared Use Path Level of Service Calculator*** may be used as a guide in determining when a width greater than the minimum might be needed.

At locations where the path narrows from the typical width warning signs or pavement markings in conformance with the MUTCD should be used.

TRAIL WIDTH

The findings of this study provide strong support for the standard trail width guidance provided in the AASHTO *Guide for the Development of Bicycle Facilities*.[2] Trails having 2.4-m (8.0-ft) width, which AASHTO recommends only in "rare instances," were found to have poor LOS, except at very low volumes or with user mixes that included few pedestrians and runners. The findings of this research support AASHTO's minimum "recommended paved width for a two-directional shared-use path of [3.0 m] ten feet." *

Planned Detail vs. VE Idea Detail (Urban)

Planned Detail (Urban Section)

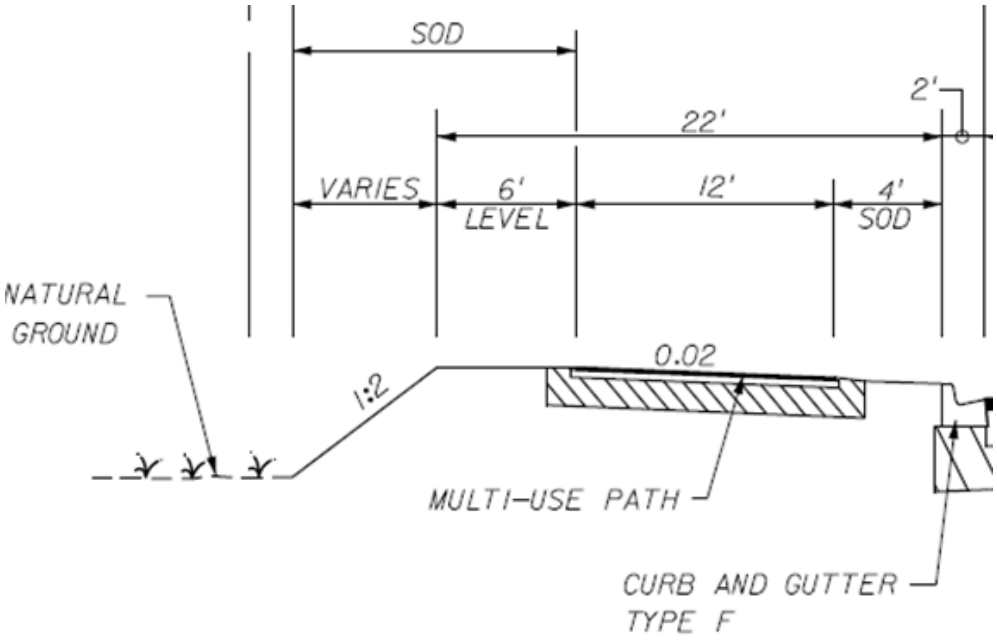

VE Idea Detail (Urban Section)

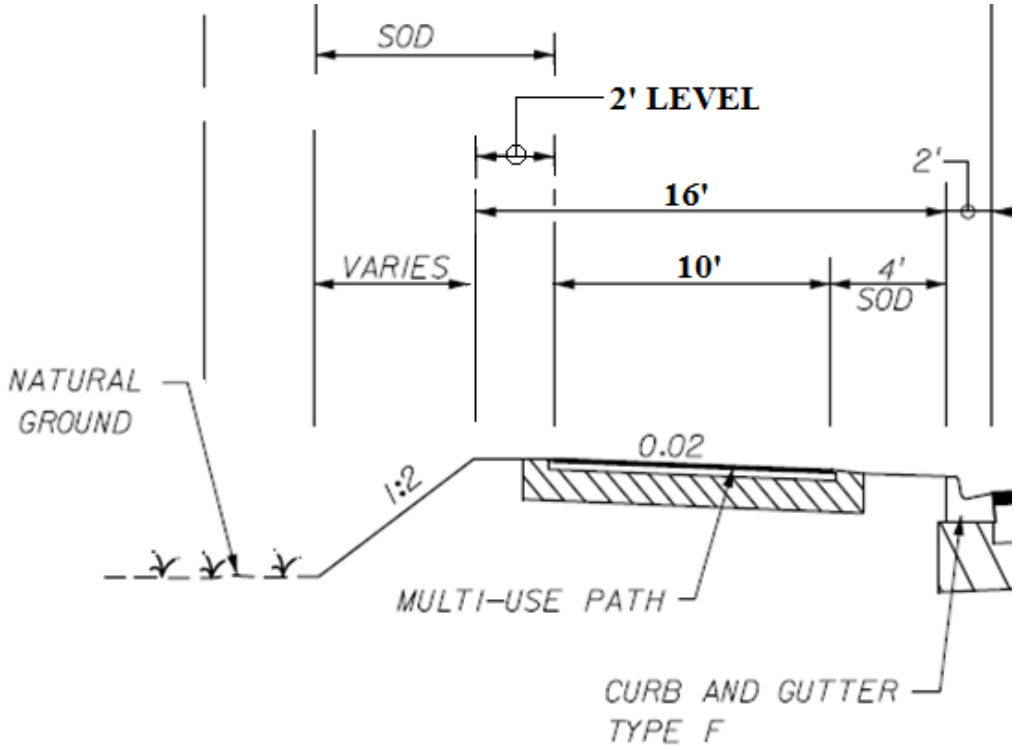

Planned Detail vs. VE Idea Detail (Suburban)

Planned Detail (Suburban Section)

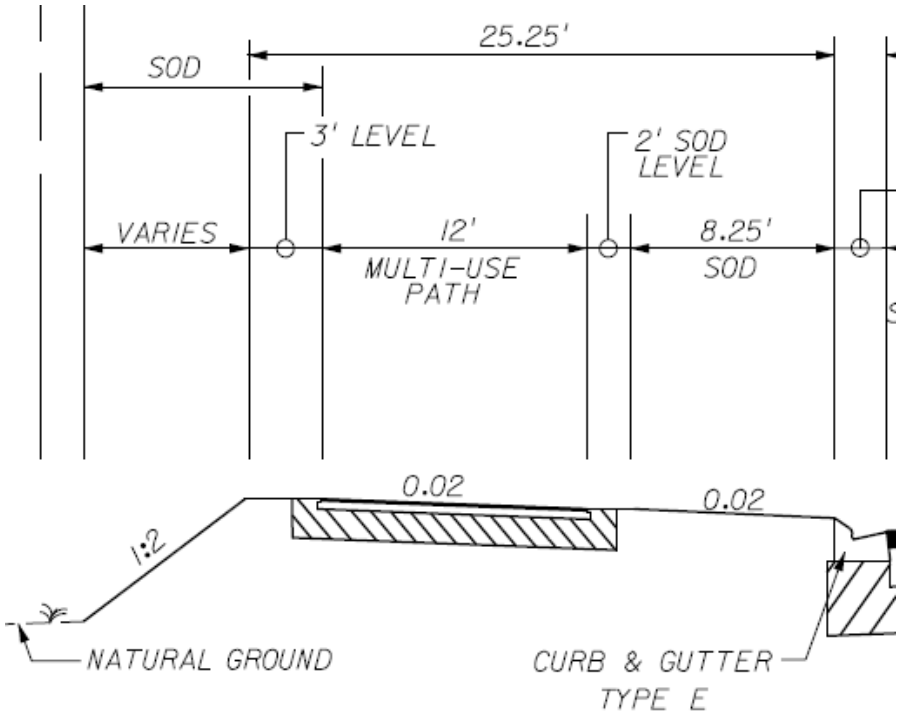

VE Idea Detail (Suburban Section)

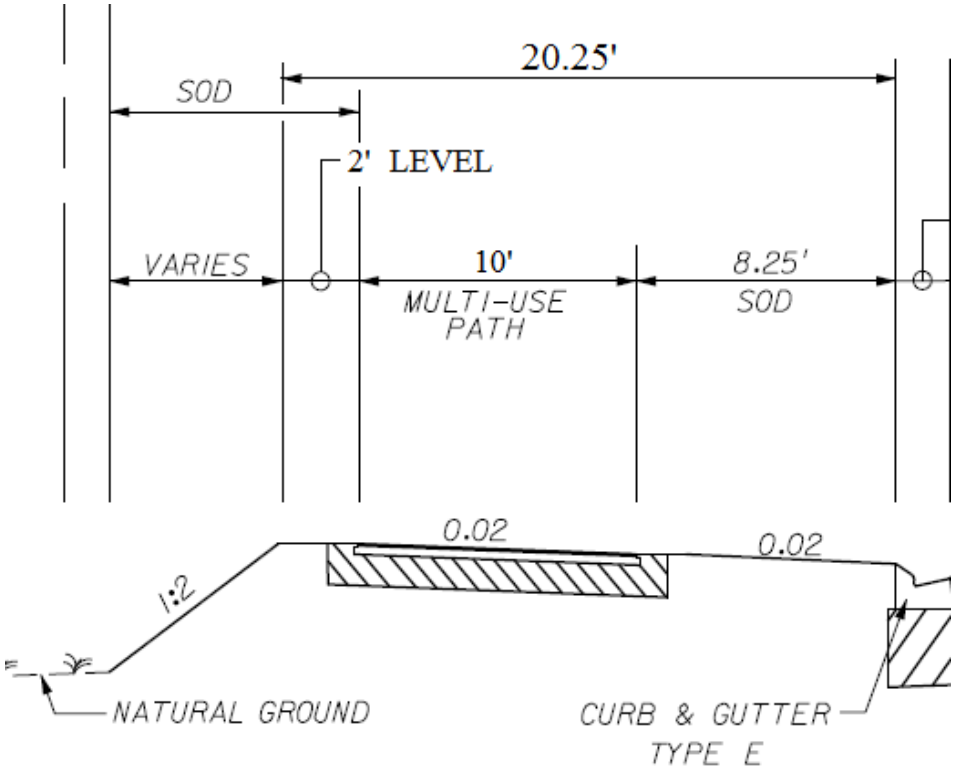

Planned Detail vs. VE Idea Detail (Bridges)

Planned Detail (Blackwater & Clear Creek Bridges)

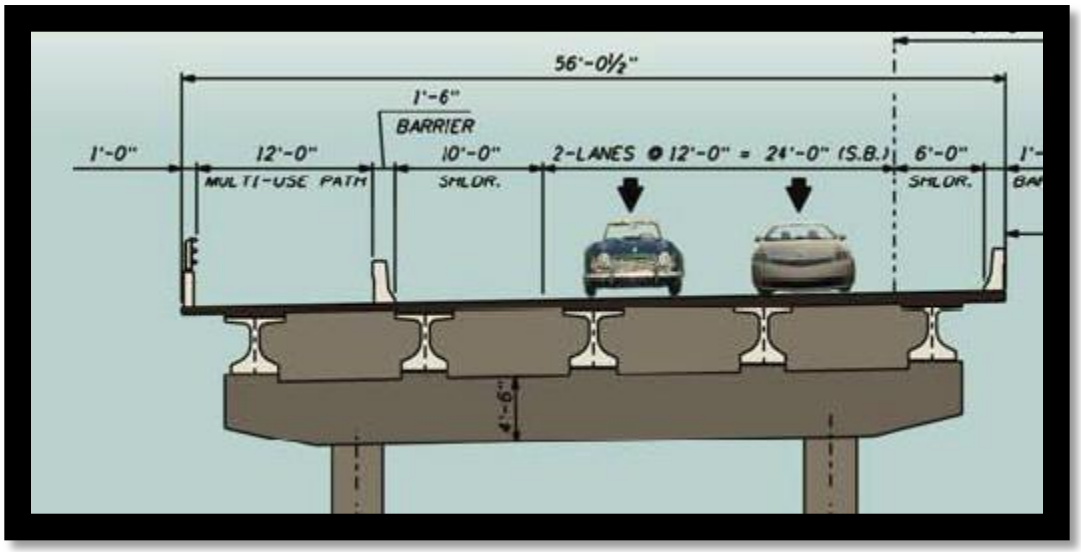

VE Idea Detail (Blackwater & Clear Creek Bridges)

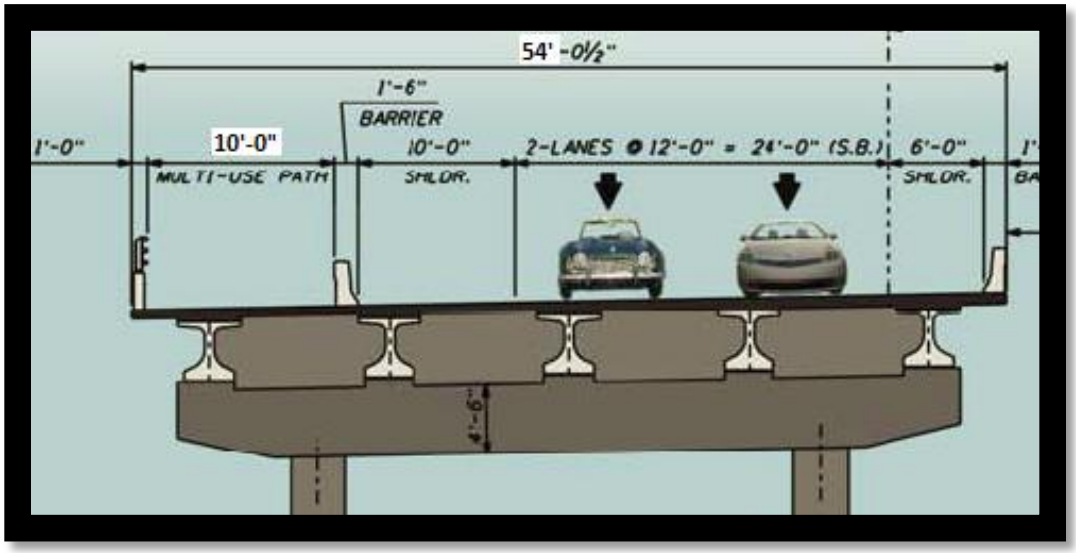

Calculations for Alternate 1

Reduction in Quantities for Alternate 1 Urban Section

Blackwater Creek (5560 feet x 2 feet reduction) = **11,120 SF**

Asphalt 1”= 110 lbs/SY x (1SY/ 9SF) x (1TN/2000 lbs) x 11,786 ft x 2 ft = **144 tons**

Base = (2ft x 11786 ft)/9 SF/SY= **2,619 SY**

Stabilization = (2 ft x 11,786 ft) / 9 SF/SY = **2619 SY**

Embankment= 22.00’-16.00’ = 6 ft (see typical section sheet 4)

(6ft x 4.5ft (avg. fill height) x 11,786 ft)/27CF/CY= **11,786 CY**

Sod (4 ft x 11,786 ft) / 9 SF/SY = **5238 SY**

Reduction in Quantities for Alternate 1 Suburban Section

Clear Creek Bridge (180 feet x 2 feet reduction) = **360 SF**

Asphalt 1”= 110 lbs/SY x (1SY/ 9SF) x (1TN/2000 lbs) x 17,989 ft x 2 ft = **220 tons**

Base = (2ft x 17,989 ft)/9 SF/SY= **3998 SY**

Stabilization = (2 ft x 17,989 ft) / 9 SF/SY = **3998 SY**

Embankment= 25.25’-15.25’ = 5 ft (see typical section sheet 4)

(5ft x 4.5ft (avg. fill height) x 11,786 ft)/27CF/CY= **14,991 CY**

Sod (3 ft **x** 11,776 ft) / 9 SF/SY = **5996 SY**

Cost Comparison Alternate 1 (Urban)

SR 87 416748-3
(ALT. 1 URBAN)10' Path **VALUE ENGINEERING IDEA No. 3**
COST COMPARISON SHEET

DESCRIPTION	UNITS	UNIT COST	Reduced QTY.	Reduced COST	V.E. QTY.	V.E. COST
Apshalt	SY	$104.35	144	$15,032		$0
Base	SY	$7.60	2619	$19,905		$0
Embankment	CY	$3.96	11786	$46,673		$0
Blackwater Bridge Savings	SF	$126.50	11120	$1,406,680		$0
Stabilization	SY	$2.27	2619	$5,945		$0
Sod	SY	$2.33	5238	$12,205		$0
				$0		$0
SUBTOTAL				**$1,506,440**		**$0**
MOBILIZATION (THIS IS SUB+CONTIN. X % =)		**5.0%**		$79,088		$0
MOT		**2.0%**		$30,129		$0
CONTINGENCIES		**5.0%**		$75,322		$0
CEI		**10.0%**		$169,098		$0
			-	$0		$0
GRAND TOTAL				**$1,860,077**		**$0**

POTENTIAL SAVINGS: $1,860,077

Cost Comparison Alternate 1 (Suburban)

SR 87 416748-3
(ALT. 1 SUBURBAN) 10' Path **VALUE ENGINEERING IDEA No. 3**
COST COMPARISON SHEET

DESCRIPTION	UNITS	UNIT COST	Reduced QTY.	Reduced COST	V.E. QTY.	V.E. COST
Apshalt	SY	$104.35	220	$22,943		$0
Base	SY	$7.60	3998	$30,381		$0
Embankment	CY	$3.96	14991	$59,364		$0
Clearcreek Bridge Savings	SF	$126.50	360	$45,540		$0
Stabilization	SY	$2.27	3998	$9,074		$0
Sod	SY	$2.33	5996	$13,971		$0
				$0		$0
SUBTOTAL				**$181,274**		**$0**
MOBILIZATION (THIS IS SUB+CONTIN. X % =)		**5.0%**		$9,517		$0
MOT		**2.0%**		$3,625		$0
CONTINGENCIES		**5.0%**		$9,064		$0
CEI		**10.0%**		$20,348		$0
			-	$0		$0
GRAND TOTAL				**$223,828**		**$0**

POTENTIAL SAVINGS: $223,828

Calculations for Alternate 2

Reduction in Quantities for Alternate 2 Urban Section

Blackwater Creek (5560 feet x 2 feet reduction) = **11,120 SF**

Asphalt 1”= 110 lbs/SY x (1SY/ 9SF) x (1TN/2000 lbs) x 13,920 ft x 2 ft = **170 tons**

Base = (2ft x 13,920 ft)/9 SF/SY= **3,093 SY**

Stabilization = (2 ft x 13,920 ft) / 9 SF/SY = **3,093 SY**

Embankment= 22.00’-16.00’ = 6 ft (see typical section sheet 4)

(6ft x 4.5ft (avg. fill height) x 13,920 ft)/27CF/CY= **13,920 CY**

Sod (4 ft x 13,920 ft) / 9 SF/SY = **6,187 SY**

Reduction in Quantities for Alternate 2 Suburban Section

Clear Creek Bridge (180 feet x 2 feet reduction) = **360 SF**

Asphalt 1”= 110 lbs/SY x (1SY/ 9SF) x (1TN/2000 lbs) x 20,904 ft x 2 ft = **255 tons**

Base = (2ft x 20,904 ft)/9 SF/SY= **4,645 SY**

Stabilization = (2 ft x 20,904 ft) / 9 SF/SY = **4,645 SY**

Embankment= 25.25’-15.25’ = 5 ft (see typical section sheet 4)

(5ft x 4.5ft (avg. fill height) x 20,904 ft)/27CF/CY= **17,420 CY**

Sod (4 ft x 20,904 ft) / 9 SF/SY = **6968 SY**

Cost Comparison Alternate 2 (Urban)

SR 87 416748-3
(ALT. 2 URBAN) 10' Path **VALUE ENGINEERING IDEA No. 3**
COST COMPARISON SHEET

DESCRIPTION	UNITS	UNIT COST	Reduced QTY.	Reduced COST	V.E. QTY.	V.E. COST
Apshalt	SY	$104.35	170	$17,753		$0
Base	SY	$7.60	3093	$23,509		$0
Embankment	CY	$3.96	13920	$55,123		$0
Blackwater Bridge Savings	SF	$126.50	11120	$1,406,680		$0
Stabilization	SY	$2.27	3093	$7,022		$0
Sod	SY	$2.33	6187	$14,415		$0
				$0		$0
SUBTOTAL				**$1,524,503**		**$0**
MOBILIZATION (THIS IS SUB+CONTIN. X % =)		**5.0%**		$80,036		$0
MOT		**2.0%**		$30,490		$0
CONTINGENCIES		**5.0%**		$76,225		$0
CEI		**10.0%**		$171,125		$0
			-	$0		$0
GRAND TOTAL				**$1,882,380**		**$0**

POTENTIAL SAVINGS: $1,882,380

Cost Comparison Alternate 2 (Suburban)

SR 87 416748-3 *(ALT. 2 SUBURBAN)10' Path* **VALUE ENGINEERING IDEA No. 3** **COST COMPARISON SHEET**						
DESCRIPTION	**UNITS**	**UNIT COST**	**Reduced QTY.**	**Reduced COST**	**V.E. QTY.**	**V.E. COST**
Apshalt	SY	$104.35	255	$26,661		$0
Base	SY	$7.60	4645	$35,305		$0
Embankment	CY	$3.96	17420	$68,983		$0
Clearcreek Bridge Savings	SF	$126.50	360	$45,540		$0
Stabilization	SY	$2.27	4645	$10,545		$0
Sod	SY	$2.33	6968	$16,235		$0
				$0		$0
SUBTOTAL				**$203,269**		**$0**
MOBILIZATION (THIS IS SUB+CONTIN. X % =)		**5.0%**		$10,672		$0
MOT		**2.0%**		$4,065		$0
CONTINGENCIES		**5.0%**		$10,163		$0
CEI		**10.0%**		$22,817		$0
			-	$0		$0
GRAND TOTAL				**$250,986**		**$0**
POTENTIAL SAVINGS:				**$250,986**		

VE Idea 4

Description

Reduce the width of the Multi-Use Path from 12 feet to 10 feet from the beginning of the project up to station 257+00. Construct 5 foot sidewalk in lieu of the Multi-Use Path for the remainder of the project.

Since the original intent of the multi-use path was to connect the old highway 1 brick road along highway 90 to the Blackwater Heritage Trail, this can be achieved by terminating the multi-use path at station 257+00. A new five foot sidewalk will be started at that location and continue to the end of the project at SR 87 north (station 455+15 for alternate 1). For Alternate 1, this will result in 19,635 feet reduction (455+15 – 257+00 - 180 feet for Clear Creek Bridge) of the following items in the multi-use trail: asphalt, base, stabilization, embankment, and sod. For Alternate 2, this will result in 24,620 feet reduction (505+00 – 257+00 - 180 feet for Clear Creek Bridge) of the same items mentioned for Alternate 1. The only items that will increase for both alternates are performance turf and sidewalk. The Clear Creek Bridge, which is180 feet in length, can have a reduced width of seven feet due to going from a 12 foot path to a 5 foot sidewalk.

The Plans Preparation Manual allows a 10 foot Multi-Use Path in lieu of the planned 12 foot path. The reduction in the width of the Multi-Use Path will result in additional reductions in quantities for asphalt, base, stabilization, embankment, and sod from the beginning of the project up to station 257+00.

Planned Detail vs. VE Idea Detail (Urban)

Planned Detail (Urban Section)

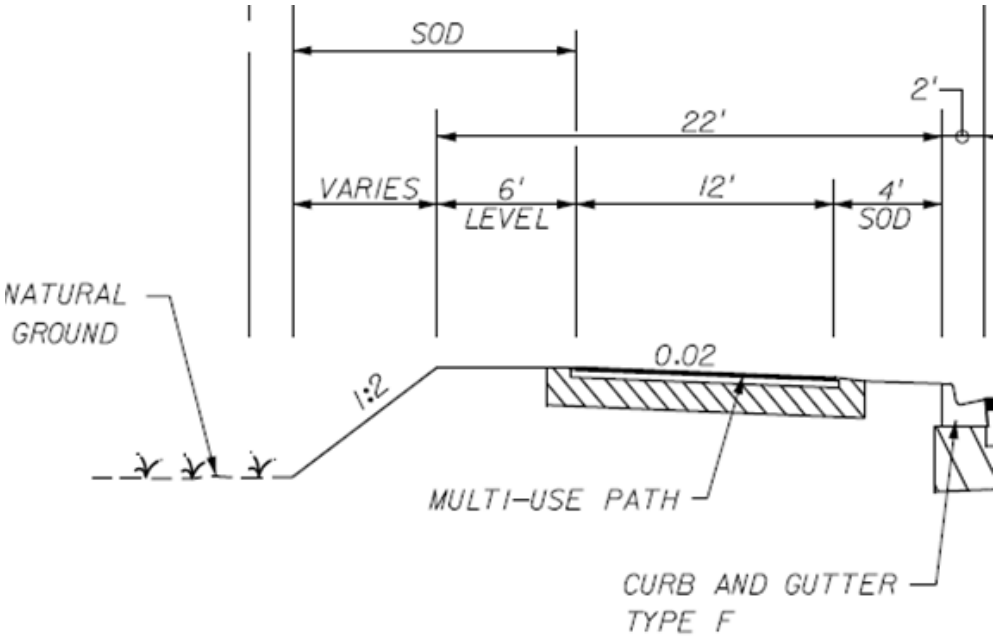

VE Idea Detail (Urban Section)

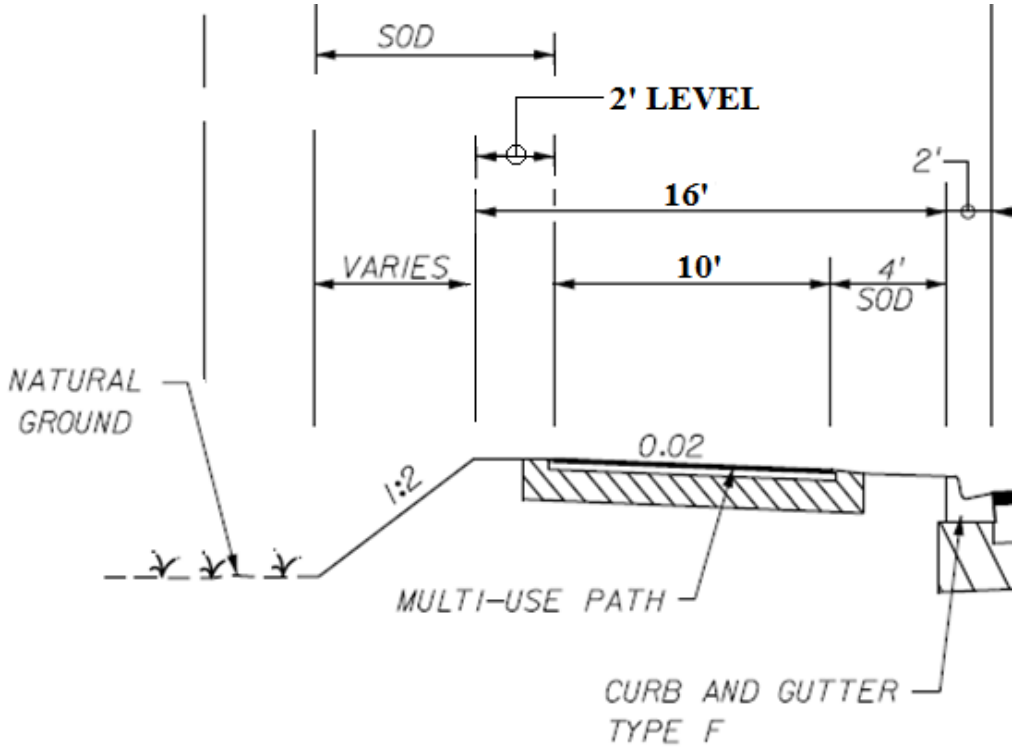

Planned Detail vs. VE Idea Detail (Suburban)

Planned Detail (Suburban Section)

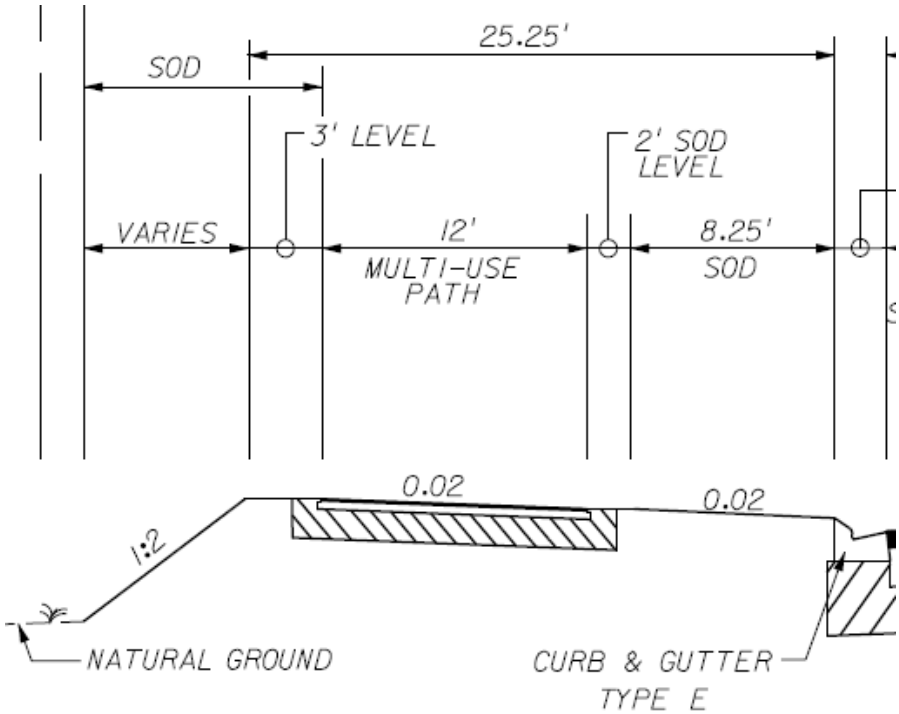

VE Idea Detail (Suburban Section)

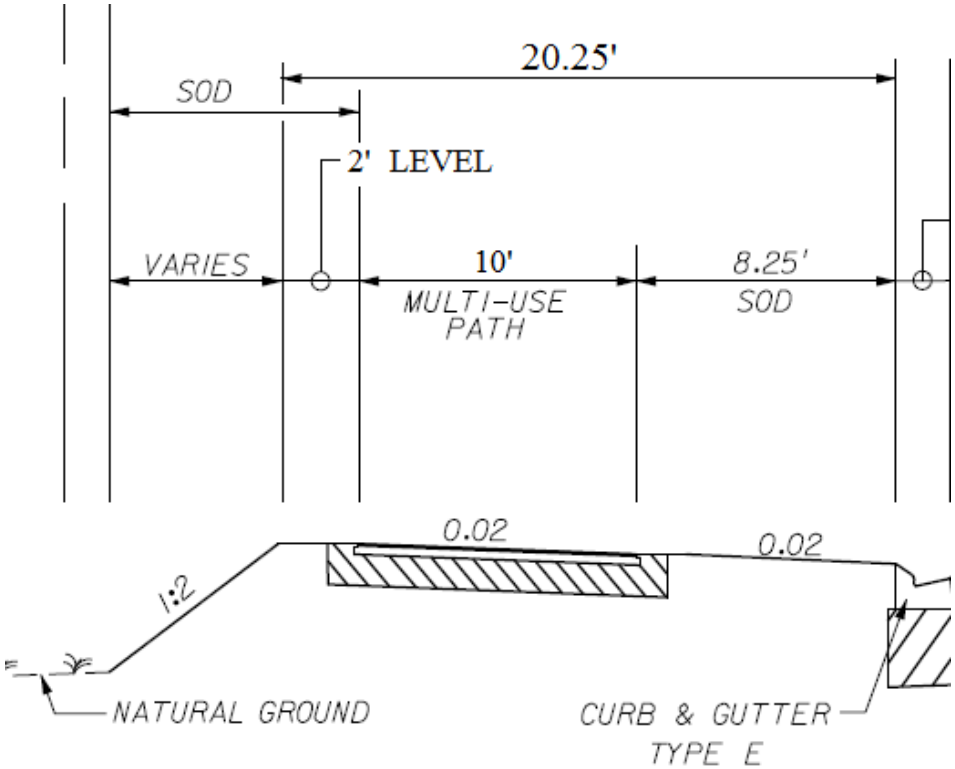

Planned Detail vs. VE Idea Detail (Blackwater Bridge)

Planned Detail Blackwater Bridge

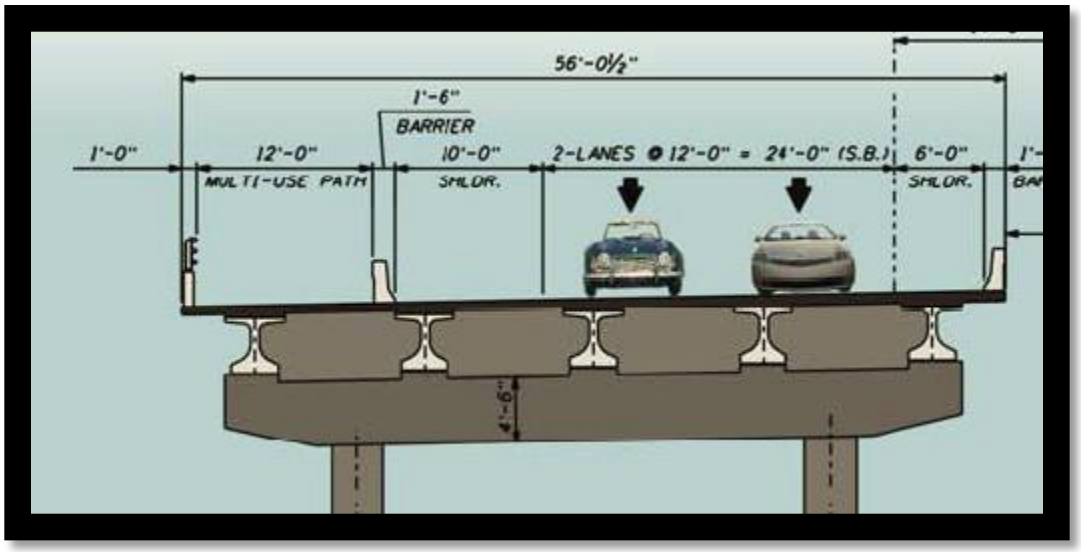

VE Idea Detail Blackwater Bridge

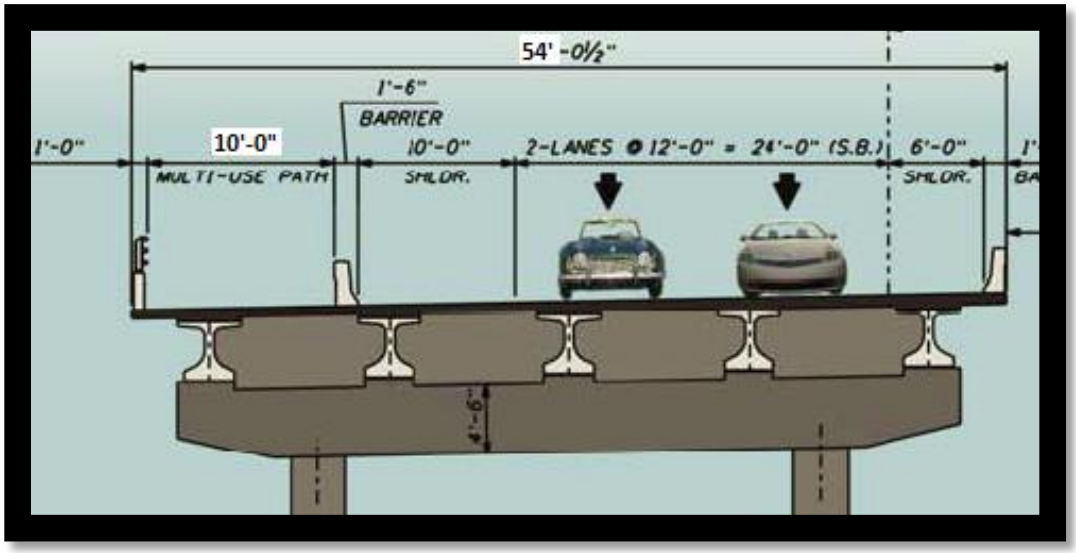

Planned Detail vs. VE Idea Detail Station 257+00

Planned Detail

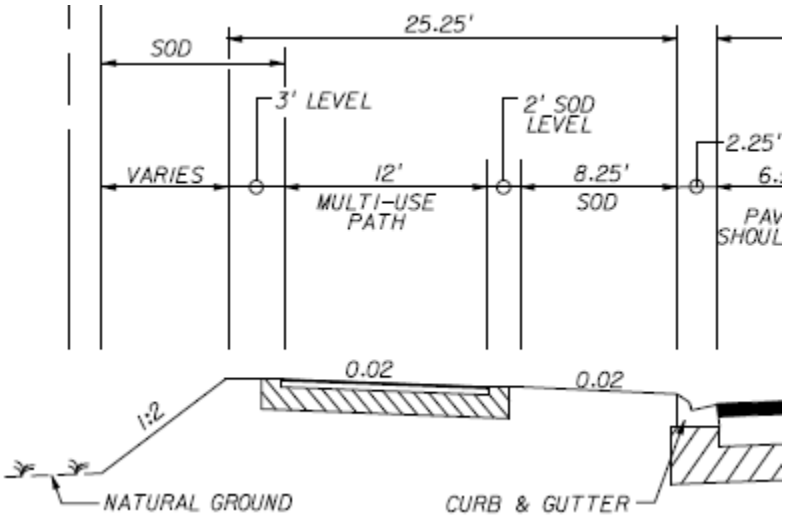

VE Idea Detail

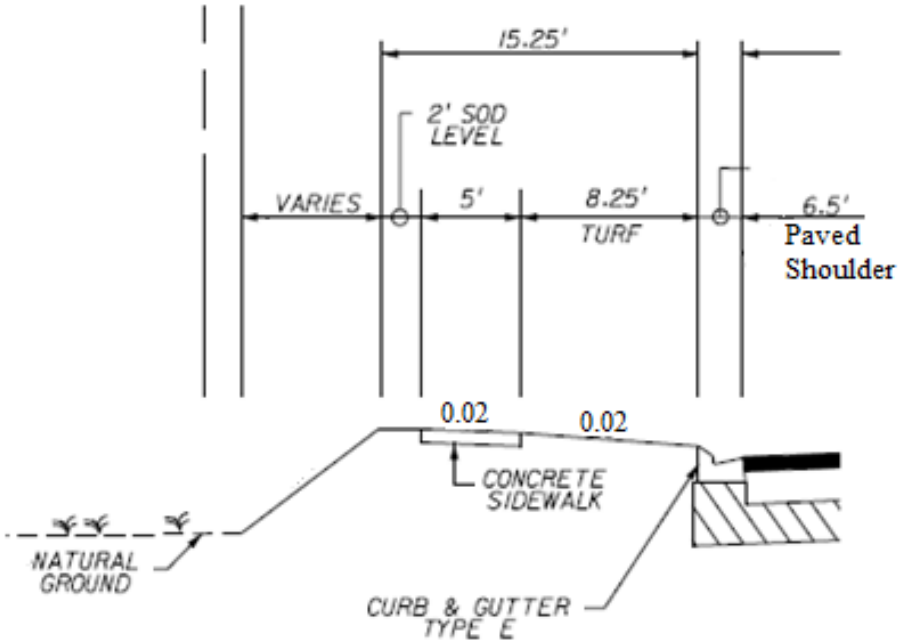

Planned Detail vs. VE Idea Detail Clear Creek Bridge

Planned Detail Clear Creek Bridge

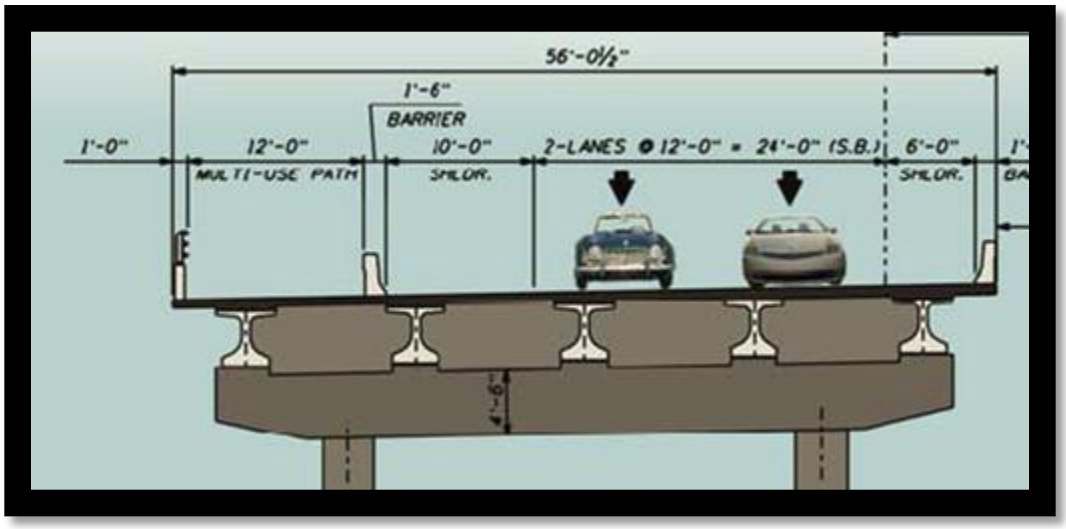

VE Detail Clear Creek Bridge

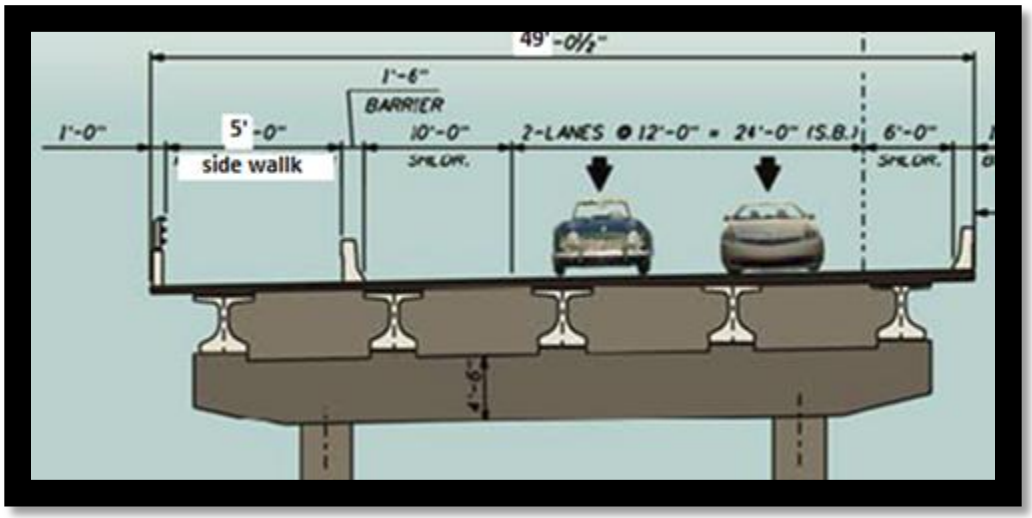

Calculations for Alternate 1 (Urban)

Reduction in Quantities for Alt. 1 Urban Section

Blackwater Creek (5560 feet x 2 feet reduction) = **11,120 SF**

Asphalt 1”= 110 lbs/SY x (1SY/ 9SF) x (1TN/2000 lbs) x 9,800 ft x 2 ft = **120 tons**

Base = (2ft x 9,800 ft)/9 SF/SY= **2,178 SY**

Stabilization = (2 ft x 9,800 ft) / 9 SF/SY = **2178 SY**

Embankment= 22.00’-16.00’ = 6 ft (see typical section sheet 4)

(6ft x 4.5ft (avg. fill height) x 9,800 ft)/27CF/CY= **9,800 CY**

Sod (4 ft x 9,800 ft) / 9 SF/SY = **4356 SY**

Cost Comparison Alternate 1 (Urban)

SR 87 416748-3 *(URBAN) to STA 257+00* **VALUE ENGINEERING IDEA No. 4** **COST COMPARISON SHEET**						
DESCRIPTION	**UNITS**	**UNIT COST**	**Reduced QTY.**	**Reduced COST**	**V.E. QTY.**	**V.E. COST**
Apshalt	SY	$104.35	120	$12,499		$0
Base	SY	$7.60	2178	$16,551		$0
Embankment	CY	$3.96	9800	$38,808		$0
Blackwater Bridge Savings	SF	$126.50	11120	$1,406,680		$0
Stabilization	SY	$2.27	2178	$4,944		$0
Sod	SY	$2.33	4356	$10,148		$0
				$0		$0
SUBTOTAL				**$1,489,630**		**$0**
MOBILIZATION (THIS IS SUB+CONTIN. X % =)		**5.0%**		$78,206		$0
MOT		**2.0%**		$29,793		$0
CONTINGENCIES		**5.0%**		$74,481		$0
CEI		**10.0%**		$167,211		$0
			-	$0		$0
GRAND TOTAL				**$1,839,321**		**$0**
POTENTIAL SAVINGS:				**$1,839,321**		

Calculations for Alternate 1 (Suburban)

Reduction in Quantities for Alt. 1 Suburban Section

Asphalt 1”= 110 lbs/SY x (1SY/ 9SF) x (1TN/2000 lbs) x 340 ft x 2 ft = **4 tons**

Base = (2ft x 340 ft)/9 SF/SY= **76 SY**

Stabilization = (2 ft x 340 ft) / 9 SF/SY = **76 SY**

Embankment= 25.25’-15.25’ = 5 ft (see typical section sheet 4)

(5ft x 4.5ft (avg. fill height) x 340 ft)/27CF/CY= **283 CY**

Sod (4 ft x 340 ft) / 9 SF/SY = **113 SY**

Cost Comparison Alternate 1 (Suburban)

SR 87 416748-3 *(SUBURBAN) to STA 257+00* **VALUE ENGINEERING IDEA No. 4** **COST COMPARISON SHEET**						
DESCRIPTION	**UNITS**	**UNIT COST**	**Reduced QTY.**	**Reduced COST**	**V.E. QTY.**	**V.E. COST**
Apshalt	SY	$104.35	4	$434		$0
Base	SY	$7.60	76	$574		$0
Embankment	CY	$3.96	283	$1,122		$0
Clearcreek Bridge Savings	SF	$126.50	0	$0		$0
Stabilization	SY	$2.27	76	$172		$0
Sod	SY	$2.33	113	$264		$0
				$0		$0
SUBTOTAL				**$2,565**		**$0**
MOBILIZATION (THIS IS SUB+CONTIN. X % =)		**5.0%**		$135		$0
MOT		**2.0%**		$51		$0
CONTINGENCIES		**5.0%**		$128		$0
CEI		**10.0%**		$288		$0
			-	$0		$0
GRAND TOTAL				**$3,168**		**$0**
POTENTIAL SAVINGS:				**$3,168**		

Calculations for Alternate 1

Reduction in Quantities for Alternate 1

Clear Creek Bridge 180 feet x 7 feet reduction = **1,260 SF**

Asphalt 1”= 110 lbs/SY x (1SY/ 9SF) x (1TN/2000 lbs) x 19,635 ft x 12 ft = **1,440 tons**

Base = 12ft + (2 x 4”)/12= (12.667ft x 19,635 ft)/9 SF/SY= **27,635 SY**

Stabilization = 12ft + (2 x 2’) = (16 ft x 19,635 ft) / 9 SF/SY = **34,907 SY**

Embankment= 25.25’-15.25’ = 10 ft (see typical section sheet 4)

(10ft x 4.5ft (avg. fill height) x 19,635 ft)/27CF/CY= **32,725 CY**

Sod (11.25 ft x 19,635 ft) / 9 SF/SY = **24,544 SY**

Increase in Quantities for Alternate 1

Performance Turf (8.25 ft x 19,635 ft) / 9 SF/SY= **17,999 SY**

Sidewalk (5ft x 19,635 ft) / 9 SF/SY = **10,908 SY**

Cost Comparison Alternate 1

SR 87 416748-3 Terminate Multi-Use Path at Heritage Trail add 5' Sidewalk
(ALT 1) **VALUE ENGINEERING IDEA No. 4**
COST COMPARISON SHEET

DESCRIPTION	UNITS	UNIT COST	Reduced QTY.	Reduced COST	Added QTY.	Added COST
Clear Creek Bridge	SF	$126.50	1260	$159,390		$0
Asphalt Multi Use Path	TN	$104.35	1440	$150,254		$0
Base for Path	SY	$7.60	27635	$210,027		$0
Stabilization for Path	SY	$2.27	34907	$79,238		$0
Embankment	CY	$3.96	32725	$129,591		$0
Sod	SY	$2.33	24544	$57,187		$0
Perf. Turf	SY	$0.75		$0	17999	$13,499
Sidewalk	SY	$26.96		$0	10908	$294,089
SUBTOTAL				**$785,687**		**$307,588**
MOBILIZATION (THIS IS SUB+CONTIN. X % =)		**5.0%**		$41,249		$16,148
MOT		**2.0%**		$15,714		$6,152
CONTINGENCIES		**5.0%**		$39,284		$15,379
CEI		**10.0%**		$88,193		$34,527
			-	$0		$0
GRAND TOTAL				**$970,127**		**$379,794**

POTENTIAL SAVINGS: $590,333

Calculations for Alternate 2

Reduction in Quantities for Alternate 2

Clear Creek Bridge (180 feet x 7 feet reduction)/9 SF/SY = **1,260 SY**

Asphalt 1”= 110 lbs/SY x (1SY/ 9SF) x (1TN/2000 lbs) x 24,620 ft x 12 ft =**1,805 tons**

Base = 12ft + (2 x 4”)/12= (12.667ft x 24,620 ft)/9 SF/SY= **34,651 SY**

Stabilization = 12ft + (2 x 2’) = (16 ft x 24,620 ft) / 9 SF/SY = **43,769 SY**

Embankment= 25.25’-15.25’ = 10 ft (see typical section sheet 4)

(10ft x 4.5ft (avg. fill height) x 24,620 ft)/27CF/CY= **41,033 CY**

Sod (11.25 ft x 24,620 ft) / 9 SF/SY = **30,775 SY**

Increase in Quantities for Alternate 2

Performance Turf (8.25 ft x 24,620 ft) / 9 SF/SY= **22,568 SY**

Sidewalk (5ft x 24,620 ft) / 9 SF/SY = **13,678 SY**

Cost Comparison Alternate 2

SR 87 416748-3 Terminate Multi-Use Path at Heritage Trail add 5' Sidewalk
(ALT 2) **VALUE ENGINEERING IDEA No. 4**
COST COMPARISON SHEET

DESCRIPTION	UNITS	UNIT COST	Reduced QTY.	Reduced COST	Added QTY.	Added COST
Clear Creek Bridge	SF	$126.50	1260	$159,390		$0
Asphalt Multi Use Path	TN	$104.35	1805	$188,400		$0
Base for Path	SY	$7.60	34651	$263,350		$0
Stabilization for Path	SY	$2.27	43769	$99,355		$0
Embankment	CY	$3.96	41033	$162,492		$0
Sod	SY	$2.33	30775	$71,706		$0
Perf. Turf	SY	$0.75		$0	22568	$16,926
Sidewalk	SY	$26.96		$0	13678	$368,753
SUBTOTAL				**$944,693**		**$385,679**
MOBILIZATION (THIS IS SUB+CONTIN. X % =)		**5.0%**		$49,596		$20,248
MOT		**2.0%**		$18,894		$7,714
CONTINGENCIES		**5.0%**		$47,235		$19,284
CEI		**10.0%**		$106,042		$43,292
			-	$0		$0
GRAND TOTAL				**$1,166,460**		**$476,217**

POTENTIAL SAVINGS: $690,243

VE Idea 5

Description

Reduce the width of the Multi-Use Path from 12 feet to 10 feet from the beginning of the project up to station 257+00. Terminate the Multi-Use Path at the Blackwater Heritage Trail (Station 257+00).

Since the original intent of the multi-use path was to connect the old highway 1 brick road along highway 90 to the Blackwater Heritage Trail, this can be achieved by terminating the multi-use path at station 257+00. The right-of-way will be purchased for possible addition of a multi-use path or sidewalk for the remainder of the project in the future. For Alternate 1, this will result in 19,635 feet reduction (455+15 – 257+00 - 180 feet for Clear Creek Bridge) of the following items in the multi-use trail: asphalt, base, stabilization, embankment, and sod. For Alternate 2, this will result in 24,620 feet reduction (505+00 – 257+00 - 180 feet for Clear Creek Bridge) of the same items mentioned for Alternate 1. The only item that will increase for both alternates is performance turf. The Clear Creek Bridge, which is180 feet in length, can have a reduced width of 13 feet due to eliminating the Multi-Use Path.

The Plans Preparation Manual allows a 10 foot Multi-Use Path in lieu of the planned 12 foot path. The reduction in the width of the Multi-Use Path will result in additional reductions in quantities for asphalt, base, stabilization, embankment, and sod from the beginning of the project up to station 257+00.

Planned Detail vs. VE Idea Detail (Urban)

Planned Detail (Urban Section)

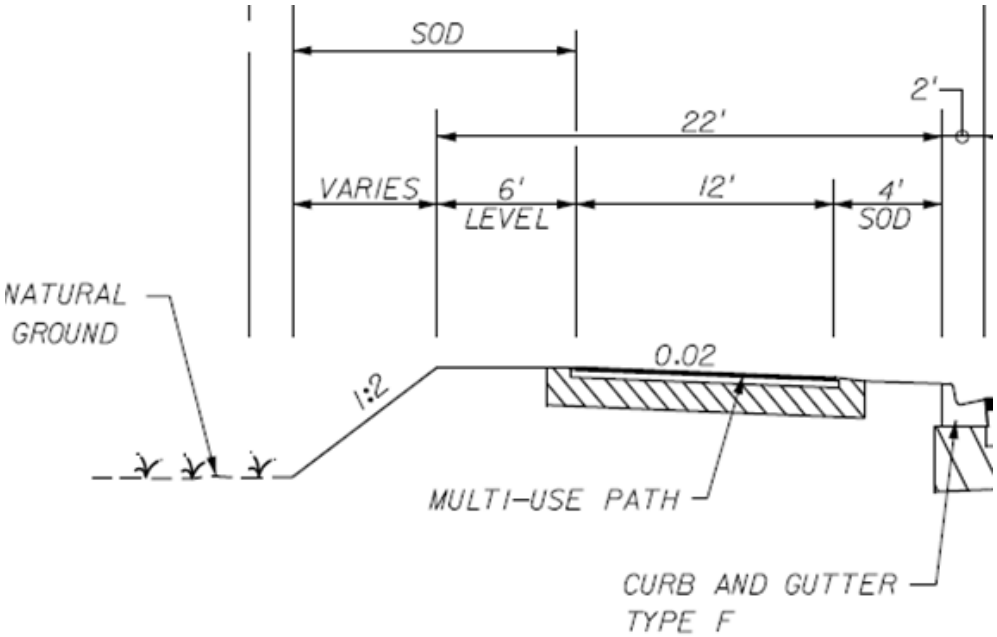

VE Idea Detail (Urban Section)

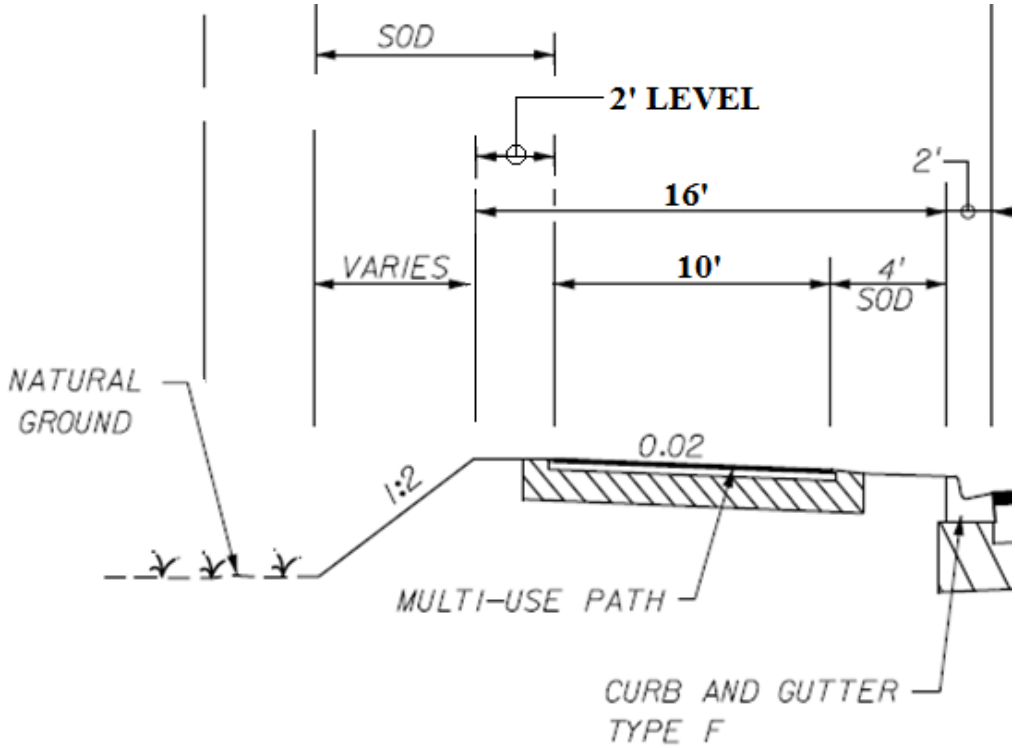

Planned Detail vs. VE Idea Detail (Suburban)

Planned Detail (Suburban Section)

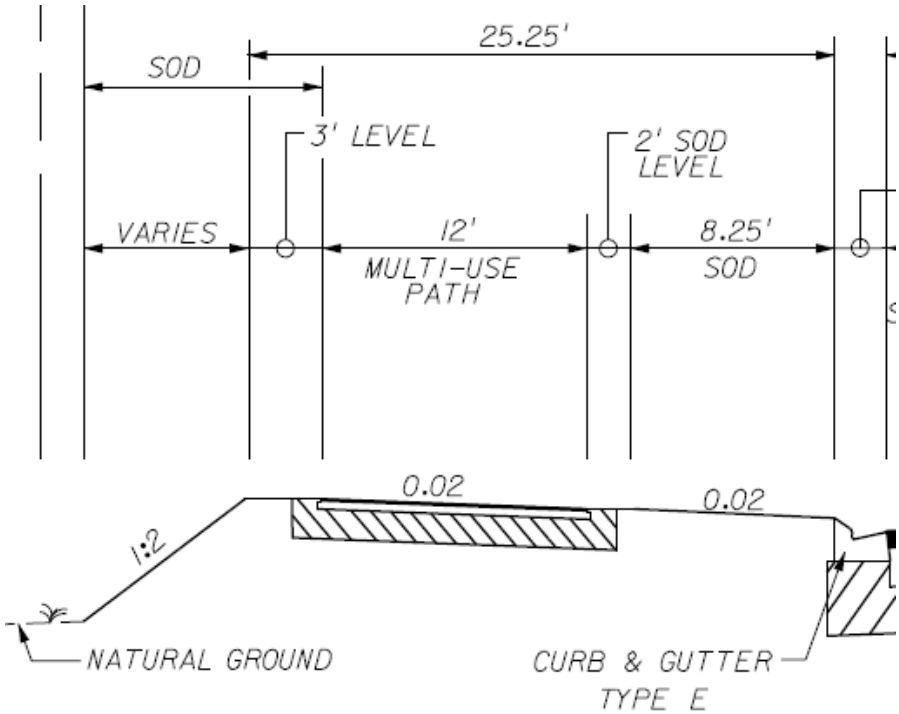

VE Idea Detail (Suburban Section)

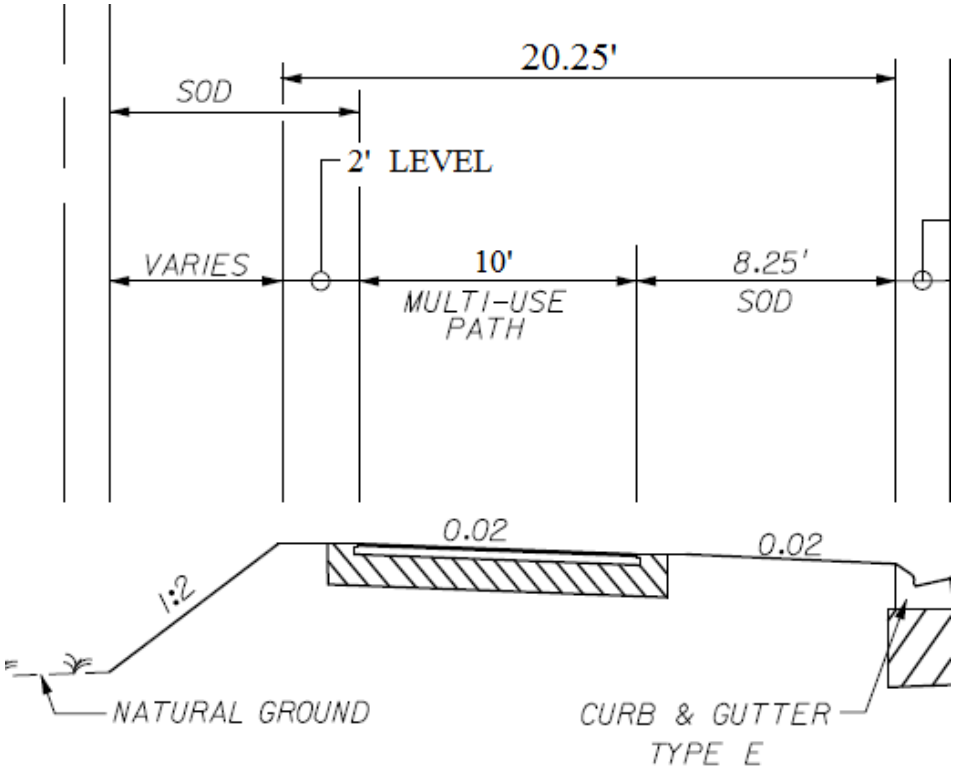

Planned Detail vs. VE Idea Detail Blackwater Bridge

Planned Detail Blackwater Bridge

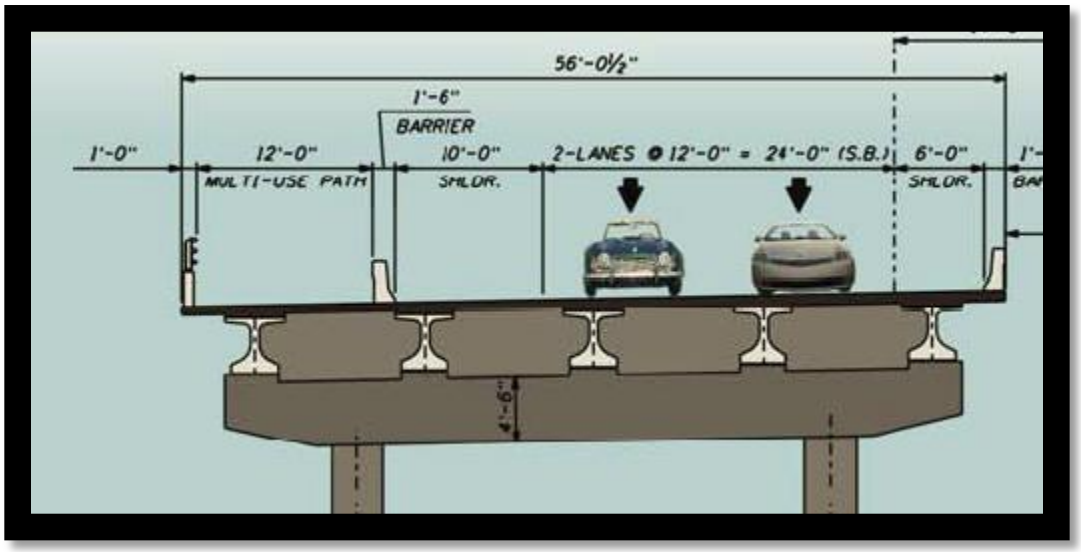

VE Idea Detail Blackwater Bridge

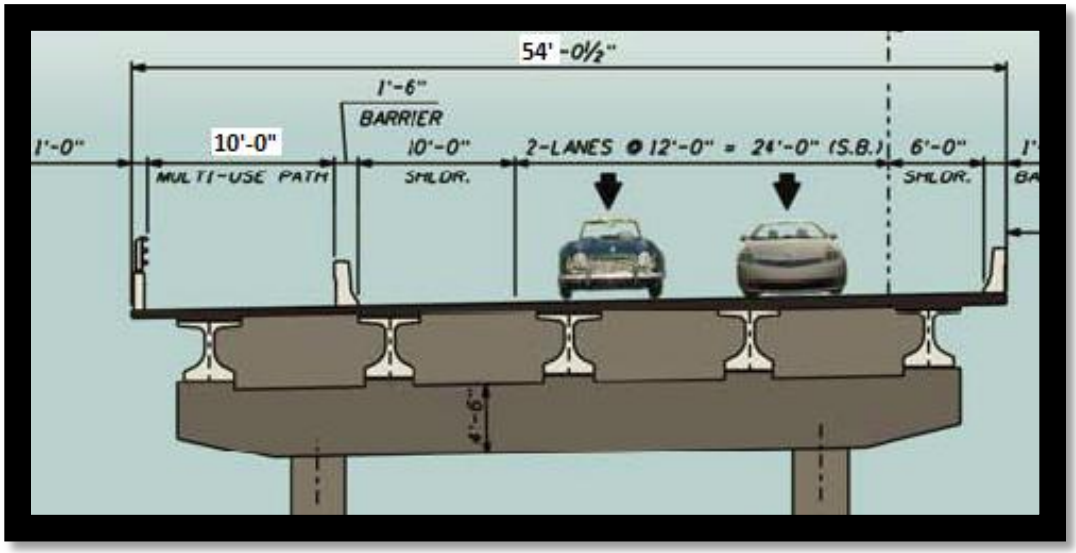

Planned Detail vs. VE Idea Detail Station 257+00

Planned Detail

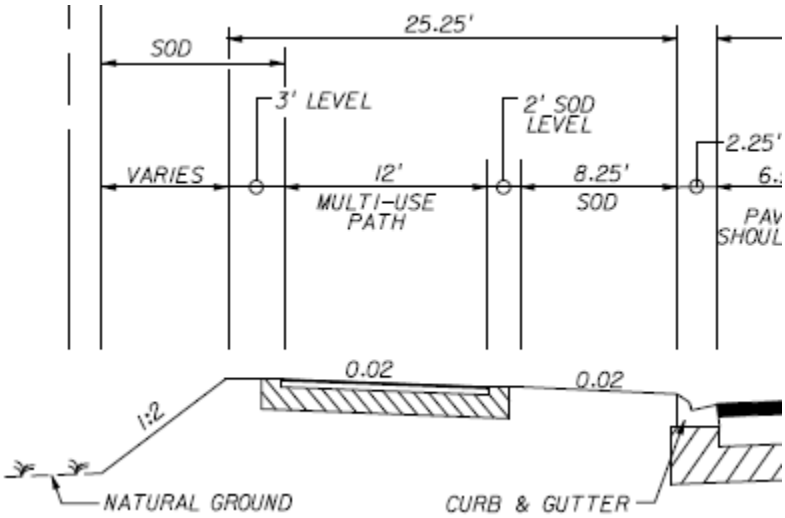

VE Idea Detail (Station 257+00 to SR 87 North)

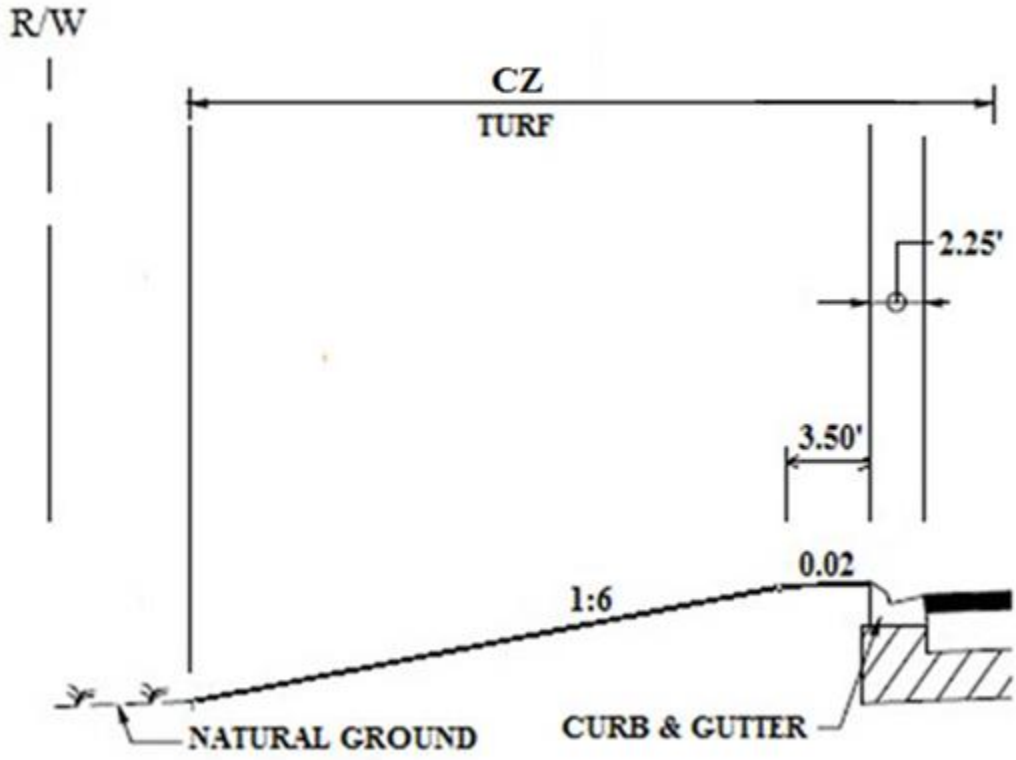

Planned Detail vs. VE Idea Detail Clear Creek Bridge

Planned Detail (Clear Creek Bridge)

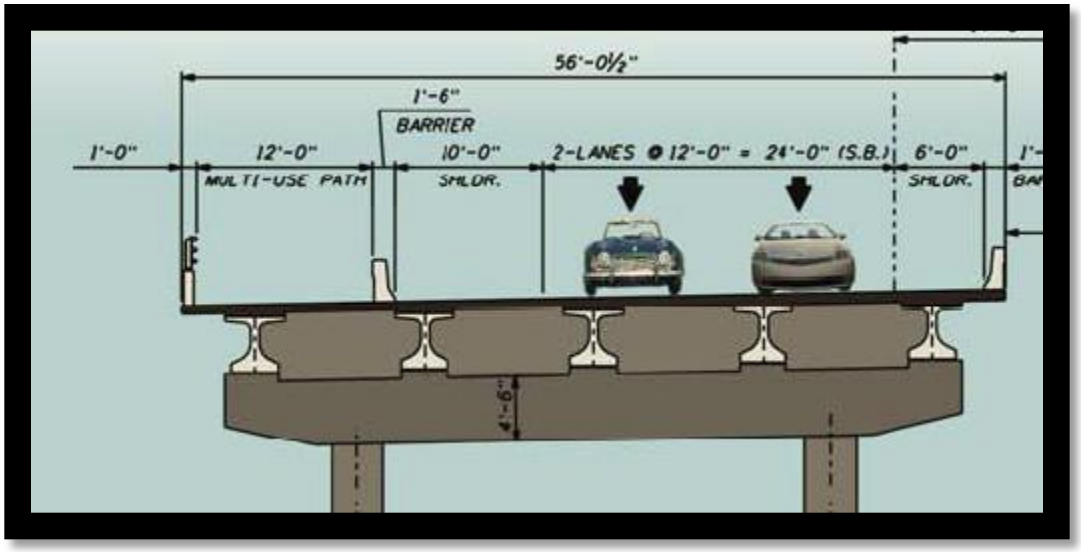

VE Idea Detail (Clear Creek Bridge)

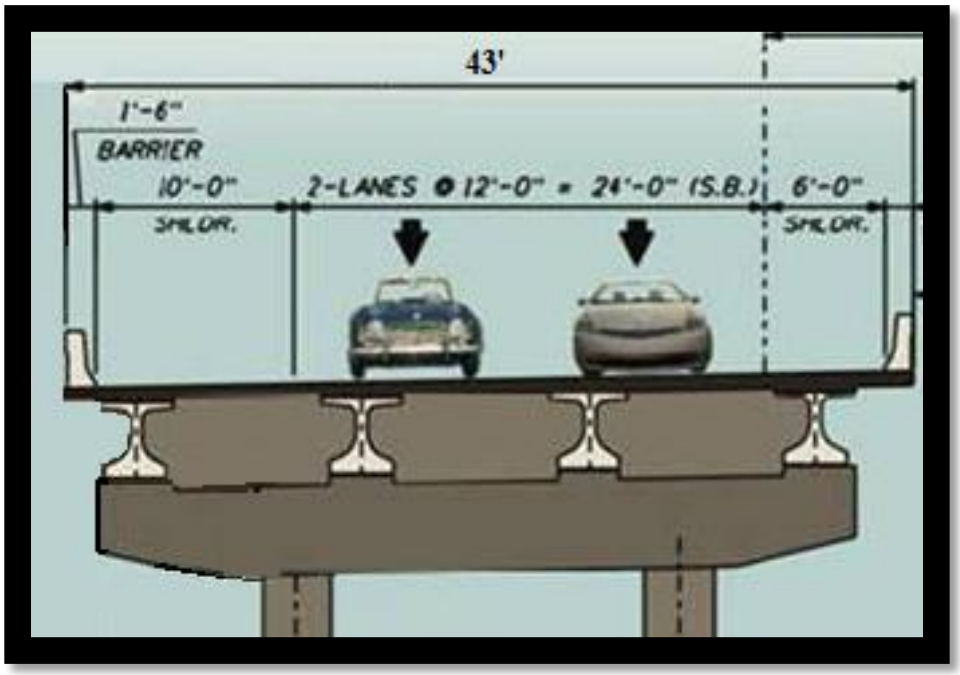

Calculations for Alternate 1 Urban

Reduction in Quantities for Alt. 1 Urban Section

Blackwater Creek (5560 feet x 2 feet reduction) = **11,120 SF**

Asphalt 1”= 110 lbs/SY x (1SY/ 9SF) x (1TN/2000 lbs) x 9,800 ft x 2 ft = **120 tons**

Base = (2ft x 9,800 ft)/9 SF/SY= **2,178 SY**

Stabilization = (2 ft x 9,800 ft) / 9 SF/SY = **2178 SY**

Embankment= 22.00’-16.00’ = 6 ft (see typical section sheet 4)

(6ft x 4.5ft (avg. fill height) x 9,800 ft)/27CF/CY= **9,800 CY**

Sod (4 ft x 9,800 ft) / 9 SF/SY = **4356 SY**

Cost Comparison Alternate 1 (Urban)

SR 87 416748-3 *(URBAN) to STA 257+00* **VALUE ENGINEERING IDEA No. 4** **COST COMPARISON SHEET**						
DESCRIPTION	**UNITS**	**UNIT COST**	**Reduced QTY.**	**Reduced COST**	**V.E. QTY.**	**V.E. COST**
Apshalt	SY	$104.35	120	$12,499		$0
Base	SY	$7.60	2178	$16,551		$0
Embankment	CY	$3.96	9800	$38,808		$0
Blackwater Bridge Savings	SF	$126.50	11120	$1,406,680		$0
Stabilization	SY	$2.27	2178	$4,944		$0
Sod	SY	$2.33	4356	$10,148		$0
				$0		$0
SUBTOTAL				**$1,489,630**		**$0**
MOBILIZATION (THIS IS SUB+CONTIN. X % =)		**5.0%**		$78,206		$0
MOT		**2.0%**		$29,793		$0
CONTINGENCIES		**5.0%**		$74,481		$0
CEI		**10.0%**		$167,211		$0
			-	$0		$0
GRAND TOTAL				**$1,839,321**		**$0**
POTENTIAL SAVINGS:				**$1,839,321**		

Calculations for Alternate 1 (Suburban)

Reduction in Quantities for Alt. 1 Suburban Section

Asphalt 1”= 110 lbs/SY x (1SY/ 9SF) x (1TN/2000 lbs) x 340 ft x 2 ft = **4 tons**

Base = (2ft x 340 ft)/9 SF/SY= **76 SY**

Stabilization = (2 ft x 340 ft) / 9 SF/SY = **76 SY**

Embankment= 25.25’-15.25’ = 5 ft (see typical section sheet 4)

(5ft x 4.5ft (avg. fill height) x 340 ft)/27CF/CY= **283 CY**

Sod (4 ft x 340 ft) / 9 SF/SY = **113 SY**

Cost Comparison Alternate 1 Suburban

SR 87 416748-3 *(SUBURBAN) to STA 257+00* **VALUE ENGINEERING IDEA No. 4** **COST COMPARISON SHEET**						
DESCRIPTION	**UNITS**	**UNIT COST**	**Reduced QTY.**	**Reduced COST**	**V.E. QTY.**	**V.E. COST**
Apshalt	SY	$104.35	4	$434		$0
Base	SY	$7.60	76	$574		$0
Embankment	CY	$3.96	283	$1,122		$0
Clearcreek Bridge Savings	SF	$126.50	0	$0		$0
Stabilization	SY	$2.27	76	$172		$0
Sod	SY	$2.33	113	$264		$0
				$0		$0
SUBTOTAL				**$2,565**		**$0**
MOBILIZATION (THIS IS SUB+CONTIN. X % =)		**5.0%**		$135		$0
MOT		**2.0%**		$51		$0
CONTINGENCIES		**5.0%**		$128		$0
CEI		**10.0%**		$288		$0
			-	$0		$0
GRAND TOTAL				**$3,168**		**$0**
POTENTIAL SAVINGS:				**$3,168**		

Calculations for Alternate 1

Reduction in Quantities for Alternate 1

Clear Creek Bridge 180 feet x 13 feet reduction = **2,340 SF**

Asphalt 1”= 110 lbs/SY x (1SY/ 9SF) x (1TN/2000 lbs) x 19,635 ft x 12 ft = **1,440 tons**

Base = 12 ft + (2 x 4”)/12= (12.667 ft x 19,635 ft)/9 SF/SY= **27,635 SY**

Stabilization = 12 ft + (2 x 2’) = (16 ft x 19,635 ft) / 9 SF/SY = **34,907 SY**

Embankment= [(71.2 SF-21.2SF) x 19,635 ft] / 27CF/CY = **36,361 CY**

Base Box = (12ft x 1/12ft) + (12.667ft x 4/12 ft) + (16ft x 1ft) = 21.2SF

Sod = 13.25 ft x 19,635 ft / 9 SF/SY = **28,907 SY**

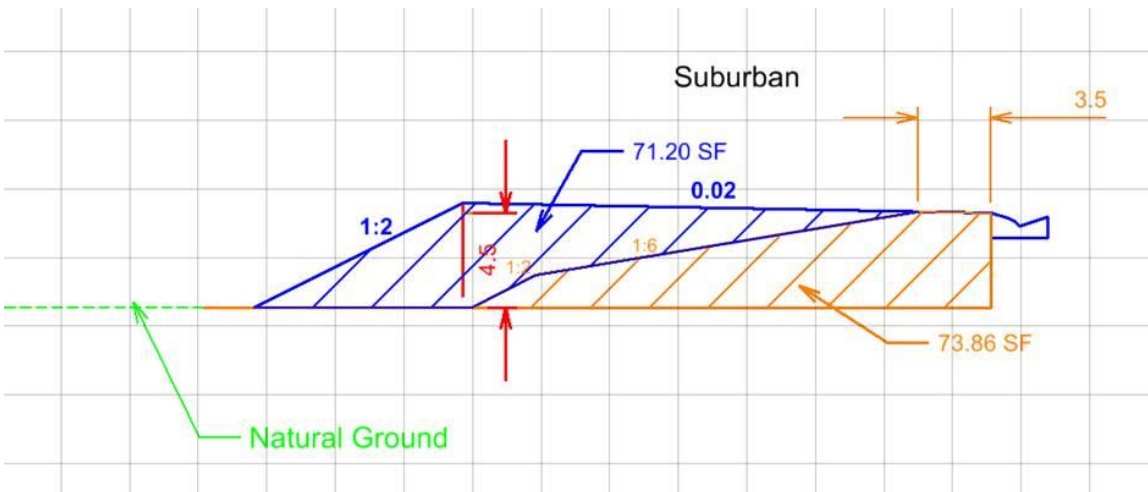

Increase in Quantities for Alternate 1

Performance Turf (21.75 ft x 19,635 ft) / 9 SF/SY= **47, 451 SY**

Cost Comparison for Alternate 1

SR 87 416748-3 Terminate Multi-Use Path at Heritage Trail
(ALT 1) **VALUE ENGINEERING IDEA No. 5**
COST COMPARISON SHEET

DESCRIPTION	UNITS	UNIT COST	Reduced QTY.	Reduced COST	Added QTY.	Added COST
Clear Creek Bridge	SF	$126.50	2340	$296,010		$0
Asphalt Multi Use Path	TN	$104.35	1440	$150,254		$0
Base for Path	SY	$7.60	27635	$210,027		$0
Stabilization for Path	SY	$2.27	34907	$79,238		$0
Embankment	CY	$3.96	36361	$143,990		$0
Sod	SY	$2.33	28907	$67,354		$0
Perf. Turf	SY	$0.75		$0	47451	$35,588
SUBTOTAL				**$946,873**		**$35,588**
MOBILIZATION (THIS IS SUB+CONTIN. X % =)		**5.0%**		$49,711		$1,868
MOT		**2.0%**		$18,937		$712
CONTINGENCIES		**5.0%**		$47,344		$1,779
CEI		**10.0%**		$106,286		$3,995
			-	$0		$0
GRAND TOTAL				**$1,169,151**		**$43,943**

POTENTIAL SAVINGS: $1,125,208

Calculations for Alternate 2

Reduction in Quantities for Alternate 2

Clear Creek Bridge 180 feet x 13 feet reduction = **2,340 SF**

Asphalt 1”= 110 lbs/SY x (1SY/ 9SF) x (1TN/2000 lbs) x 24,620 ft x 12 ft = **1,805 tons**

Base = 12ft + (2 x 4”)/12= (12.667ft x 24,620 ft)/9 SF/SY= **34,651 SY**

Stabilization = 12ft + (2 x 2’) = (16 ft x 24,620 ft) / 9 SF/SY = **43,769 SY**

Embankment= [(71.2 SF-21.2SF) x 24,620 ft] / 27CF/CY = **45,593 CY**

Base Box = (12ft x 1/12ft) + (12.667ft x 4/12 ft) + (16ft x 1ft) = 21.2SF

Sod = 13.25 ft x 24,620 ft / 9 SF/SY = **36,246 SY**

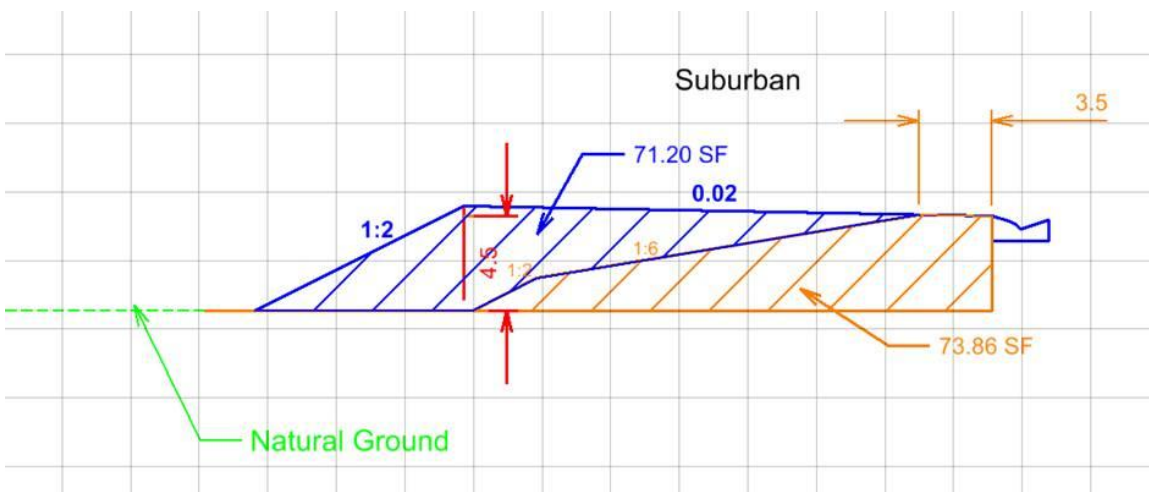

Increase in Quantities for Alternate 1

Performance Turf (21.75 ft x 24,620 ft) / 9 SF/SY= **59,498 SY**

Cost Comparison for Alternate 2

SR 87 416748-3 Terminate Multi-Use Path at Heritage Trail *(ALT 2)* **VALUE ENGINEERING IDEA No. 5** **COST COMPARISON SHEET**						
DESCRIPTION	**UNITS**	**UNIT COST**	**Reduced QTY.**	**Reduced COST**	**Added QTY.**	**Added COST**
Clear Creek Bridge	SF	$126.50	2340	$296,010		$0
Asphalt Multi Use Path	TN	$104.35	1805	$188,400		$0
Base for Path	SY	$7.60	34651	$263,350		$0
Stabilization for Path	SY	$2.27	43769	$99,355		$0
Embankment	CY	$3.96	45593	$180,547		$0
Sod	SY	$2.33	36246	$84,453		$0
Perf. Turf	SY	$0.75		$0	59498	$44,624
SUBTOTAL				**$1,112,116**		**$44,624**
MOBILIZATION (THIS IS SUB+CONTIN. X % =)		**5.0%**		$58,386		$2,343
MOT		**2.0%**		$22,242		$892
CONTINGENCIES		**5.0%**		$55,606		$2,231
CEI		**10.0%**		$124,835		$5,009
			-	$0		$0
GRAND TOTAL				**$1,373,185**		**$55,099**
POTENTIAL SAVINGS:				**$1,318,086**		

VE Idea 6

Eliminate the five foot sidewalk on the east side of the roadway for the entire length of the project. Since there is multi-use path and sidewalk on the western roadway, there is no need for sidewalk on the eastern roadway. This is a new alignment with no developed areas.

Planned Detail vs. VE Idea Detail (Urban)

Planned Detail Urban Section

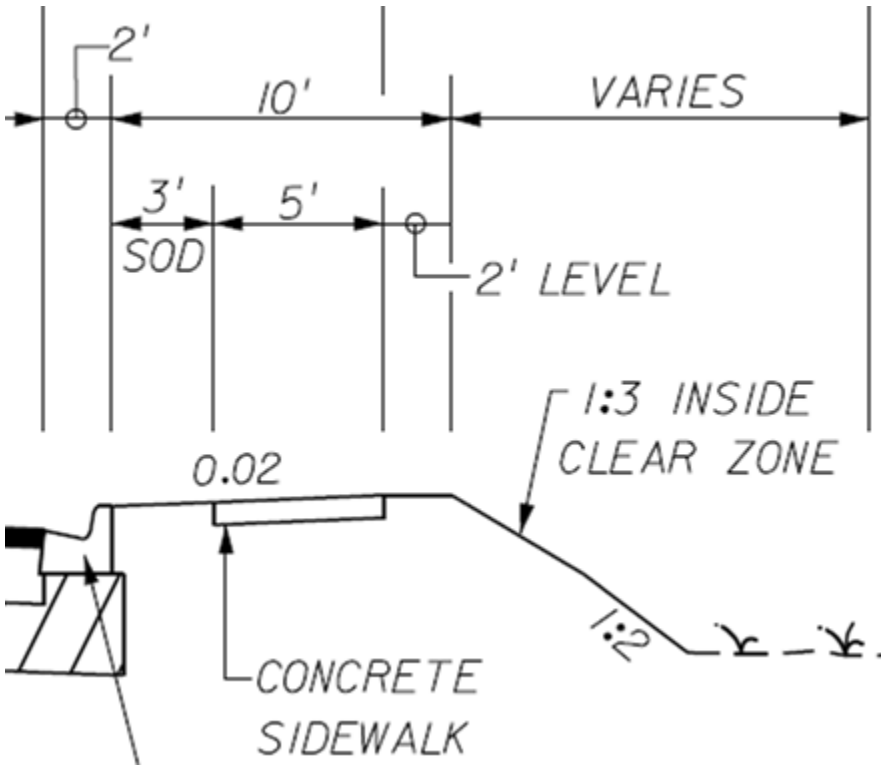

Planned Detail vs. VE Idea Detail (Suburban)

Planned Detail Suburban Section

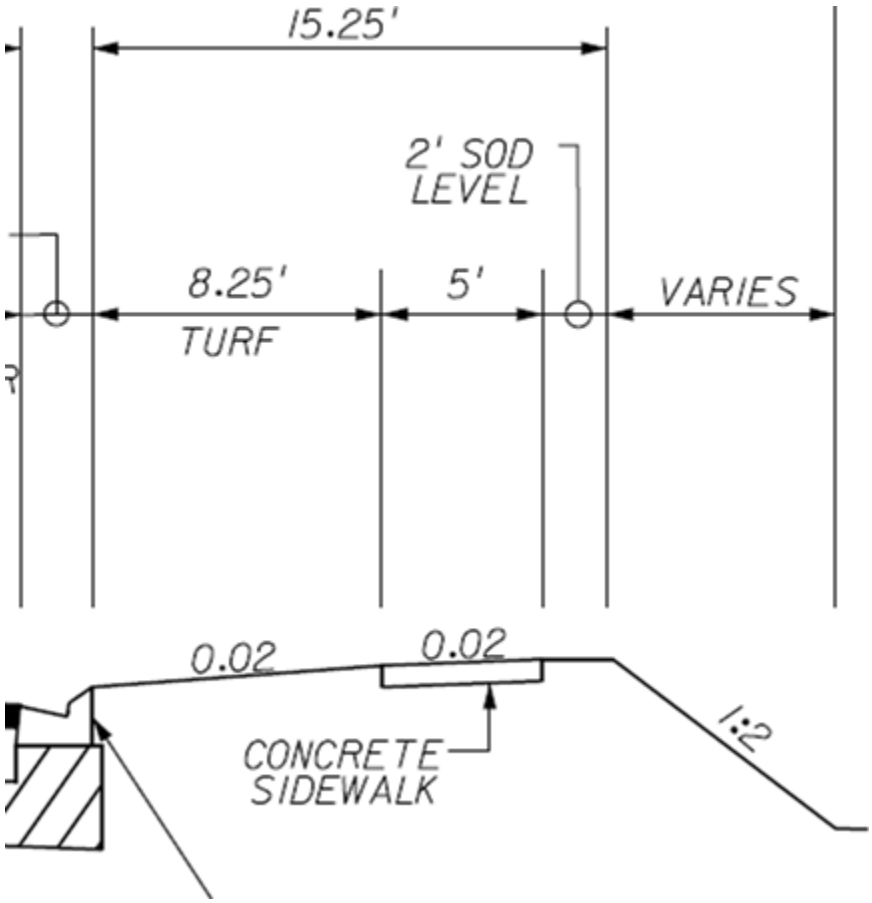

Planned Detail vs. VE Idea Detail

VE Idea Detail for Urban and Suburban Sections

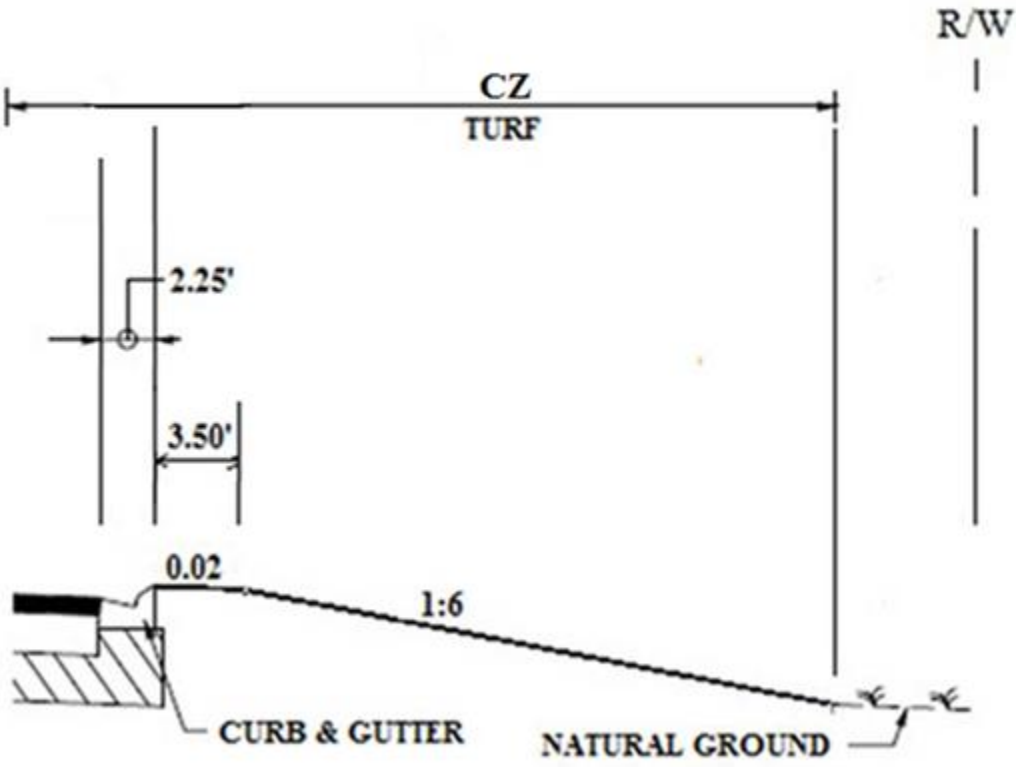

Calculations for Alternate 1 (Urban)

Reduction in Quantities for Alt. 1 Urban Section

Blackwater Creek (5,560 feet x 6 feet reduction) = **33,360 SF**

Sidewalk (13,920 feet x 5 feet reduction)/9 SF/SY = **7,733 SY**

Embankment= 12.68 SF (See Urban CADD Drawing)

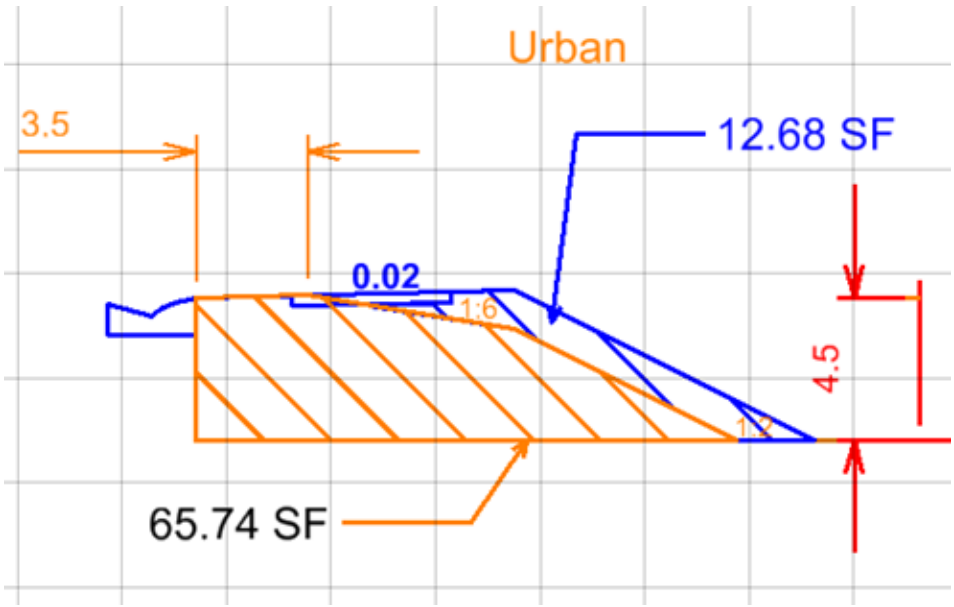

(12.68) x 13,920 ft)/27CF/CY= **6,537 CY**

Sod (2 ft x 13,920 ft) / 9 SF/SY = **3,093 SY**

Turf (7 ft x 13,920 ft) / 9 SF/SY = **10,827 SY**

Calculations for Alternate 1 (Suburban)

Reduction in Quantities for Alt. 1 Suburban Section

Clearwater Creek (180 feet x 6 feet reduction) = **1,080 SF**

Sidewalk (17,989 feet x 5 feet reduction)/9 SF/SY = **9,994 SY**

Embankment= 26.67 SF (See Suburban CADD Drawing)

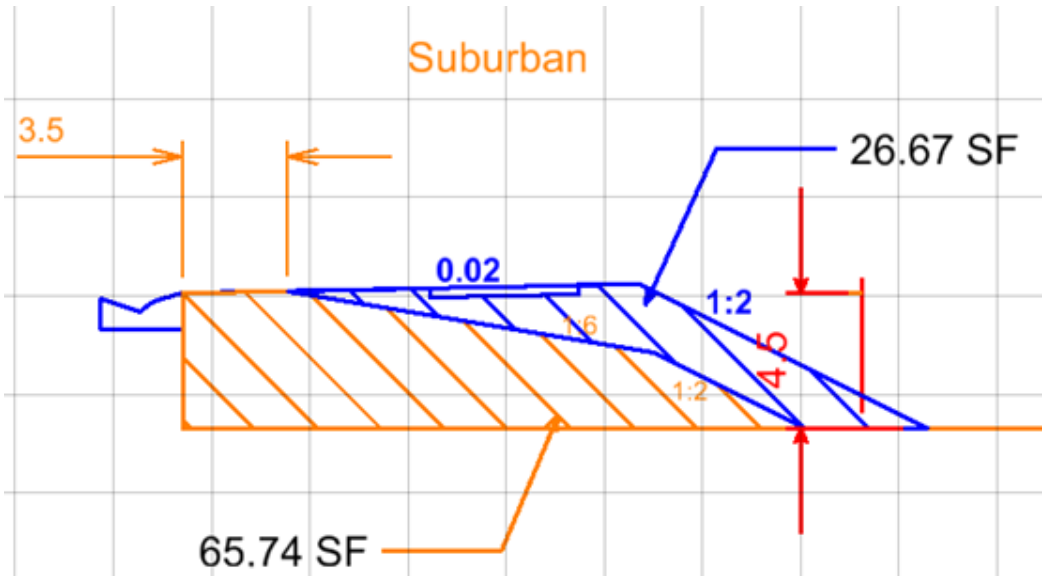

(26.67) x 17,989 ft)/27CF/CY= **17,769 CY**

Sod (2 ft x 17,989 ft) / 9 SF/SY = **3,998 SY**

Turf (7 ft x 17,989 ft) / 9 SF/SY = **13,991 SY**

Cost Comparison Alternate 1

SR 87 416748-3 (Delete 5' Sidewalk entire project East side)
(ALT 1) **VALUE ENGINEERING IDEA No. 6**
COST COMPARISON SHEET

DESCRIPTION	UNITS	UNIT COST	Reduced QTY.	Reduced COST	Added QTY.	Added COST
5' Sidewalk (East Side - Urban & Suburban)	SY	$26.96	17,727	$477,926		$ -
Bridges (6' width)	SF	$126.50	34,440	$4,356,660		$ -
Embankment	CY	$3.96	24,306	$96,253		$ -
Performance Turf, Sod	SY	$2.33	7,091	$16,522		$ -
				$0		$ -
Performance Turf	SY	$0.75		$0	24818	$ 18,614
				$0		$ -
				$0		$ -
SUBTOTAL				**$4,947,361**		**$ 18,614**
MOBILIZATION (THIS IS SUB+CONTIN. X % =)		**5.0%**		$259,736		$ 977
MOT		**2.0%**		$98,947		$ 372
CONTINGENCIES		**5.0%**		$247,368		$ 931
CEI		**10.0%**		$555,341		$ 2,089
			-	$0		$ -
GRAND TOTAL				**$6,108,754**		**$ 22,983**

POTENTIAL SAVINGS: $6,085,771

Calculations for Alternate 2 (Urban)

Reduction in Quantities for Alt. 2 Urban Section

Blackwater Creek (5,560 feet x 6 feet reduction) = **33,360 SF**

Sidewalk (13,920 feet x 5 feet reduction)/9 SF/SY = **7,733 SY**

Embankment= 12.68 SF (See Urban CADD Drawing)

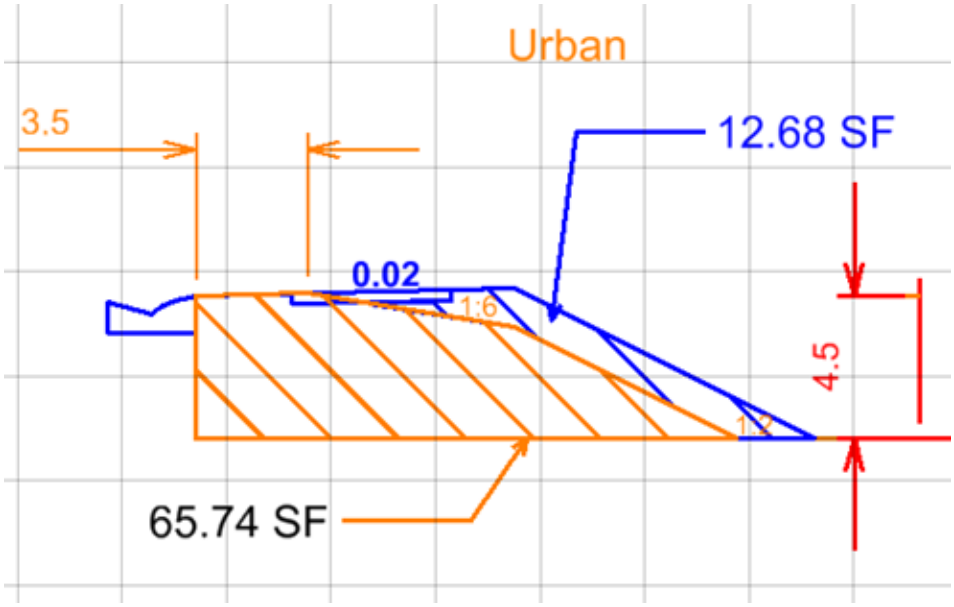

(12.68) x 13,920 ft)/27CF/CY= **6,537 CY**

Sod (2 ft x 13,920 ft) / 9 SF/SY = **3,093 SY**

Turf (7 ft x 13,920 ft) / 9 SF/SY = **10,827 SY**

Calculations for Alternate 2 (Suburban)

Reduction in Quantities for Alt. 2 Suburban Section

Clearwater Creek (180 feet x 6 feet reduction) = **1,080 SF**

Sidewalk (20,904 feet x 5 feet reduction)/9 SF/SY = **11,613 SY**

Embankment= 26.67 SF (See Suburban CADD Drawing)

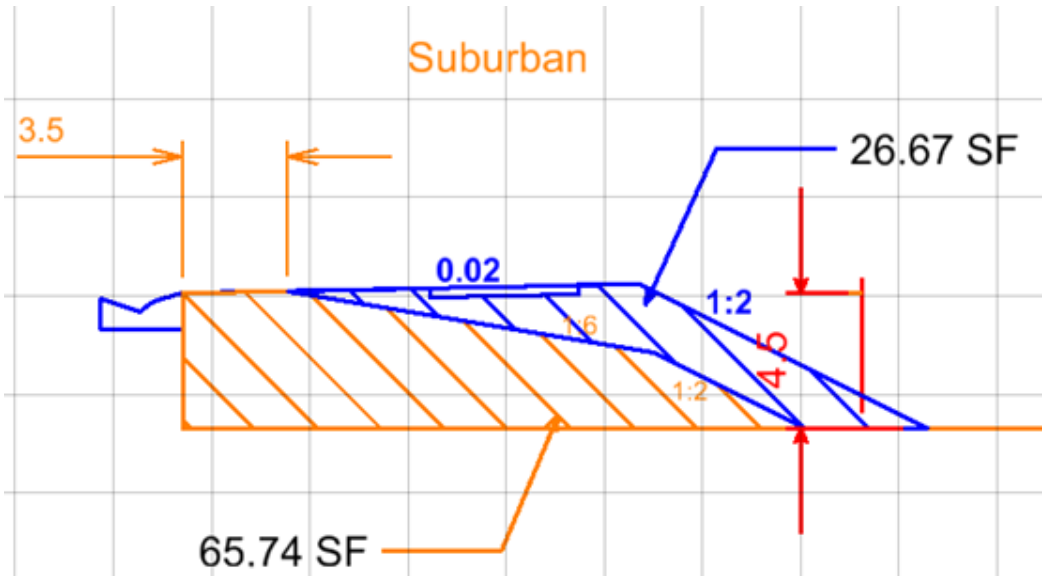

(26.67) x 20,904 ft)/27CF/CY= **20,649 CY**

Sod (2 ft x 20,904 ft) / 9 SF/SY = **4,645 SY**

Turf (7 ft x 20,904 ft) / 9 SF/SY = **16,259 SY**

Cost Comparison Alternate 2

SR 87 416748-3 (Delete 5' Sidewalk entire project East side) *(ALT 2)* **VALUE ENGINEERING IDEA No. 6** **COST COMPARISON SHEET**						
DESCRIPTION	**UNITS**	**UNIT COST**	**Reduced QTY.**	**Reduced COST**	**Added QTY.**	**Added COST**
5' Sidewalk (East Side - Urban & Suburban)	SY	$26.96	19,347	$521,586		$ -
Bridges (6' width)	SF	$126.50	34,440	$4,356,660		$ -
Embankment	CY	$3.96	27,186	$107,656		$ -
Performance Turf, Sod	SY	$2.33	7,739	$18,031		$ -
				$0		$ -
Performance Turf	SY	$0.75		$0	27085	$ 20,314
				$0		$ -
				$0		$ -
SUBTOTAL				**$5,003,933**		**$ 20,314**
MOBILIZATION (THIS IS SUB+CONTIN. X % =)		**5.0%**		$262,706		$ 1,066
MOT		**2.0%**		$100,079		$ 406
CONTINGENCIES		**5.0%**		$250,197		$ 1,016
CEI		**10.0%**		$561,691		$ 2,280
			-	$0		$ -
GRAND TOTAL				**$6,178,606**		**$ 25,083**
POTENTIAL SAVINGS:				**$6,153,523**		

VE Idea 7

This idea is to combine VE Idea 4 and VE Idea 6.

Reduce the width of the Multi-Use Path from 12 feet to 10 feet from the beginning of the project up to station 257+00. Construct 5 foot sidewalk in lieu of the Multi-Use Path for the remainder of the project. Eliminate the five foot sidewalk on the east side of the roadway for the entire length of the project.

Since the original intent of the multi-use path was to connect the old highway 1 brick road along highway 90 to the Blackwater Heritage Trail, this can be achieved by terminating the multi-use path at station 257+00. A new five foot sidewalk will be started at that location and continue to the end of the project at SR 87 north (station 455+15 for alternate 1). For Alternate 1, this will result in 19,635 feet reduction (455+15 – 257+00 - 180 feet for Clear Creek Bridge) of the following items in the multi-use trail: asphalt, base, stabilization, embankment, and sod. For Alternate 2, this will result in 24,620 feet reduction (505+00 – 257+00 - 180 feet for Clear Creek Bridge) of the same items mentioned for Alternate 1. The only items that will increase for both alternates are performance turf and sidewalk. The Clear Creek Bridge, which is180 feet in length, can have a reduced width of seven feet due to going from a 12 foot path to a 5 foot sidewalk.

The Plans Preparation Manual allows a 10 foot Multi-Use Path in lieu of the planned 12 foot path. The reduction in the width of the Multi-Use Path will result in additional reductions in quantities for asphalt, base, stabilization, embankment, and sod from the beginning of the project up to station 257+00.

This new alignment is in an undeveloped area and sidewalk is not needed on the east side of the roadway.

Planned Detail vs. VE Idea Detail (Urban)

Planned Detail (Urban Section)

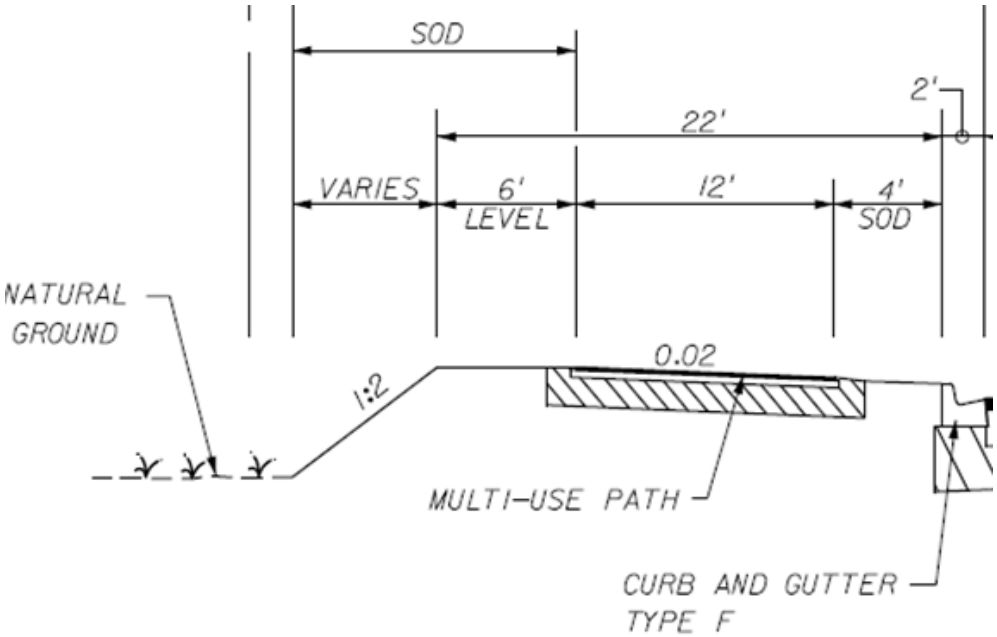

VE Idea Detail (Urban Section)

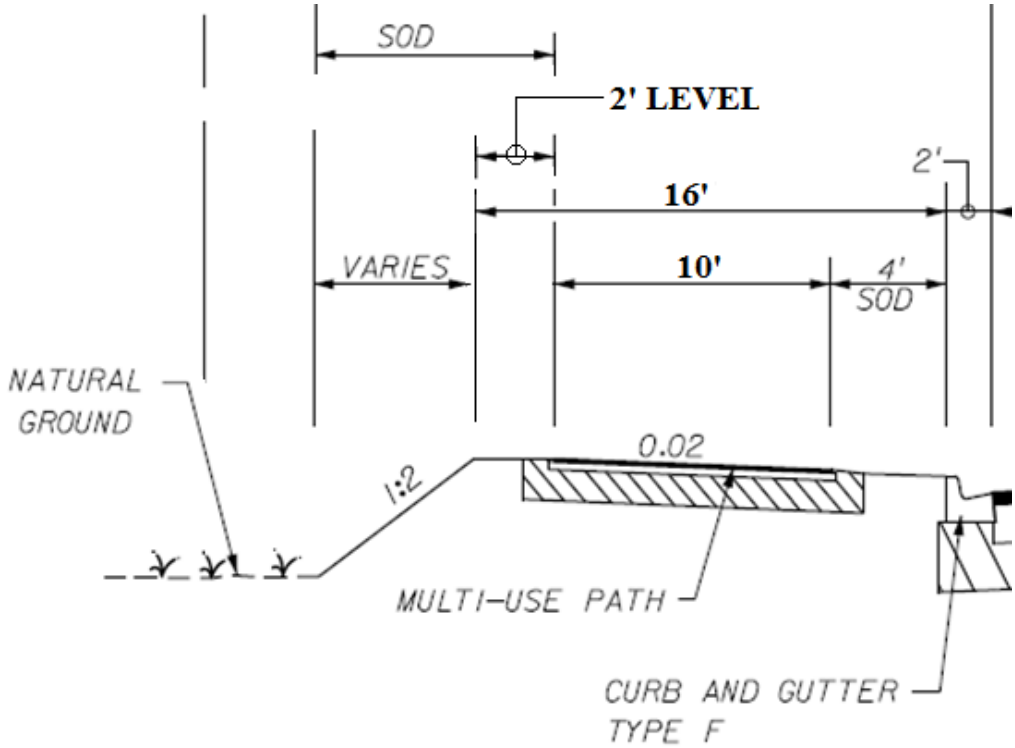

Planned Detail vs. VE Idea Detail (Suburban)

Planned Detail (Suburban Section)

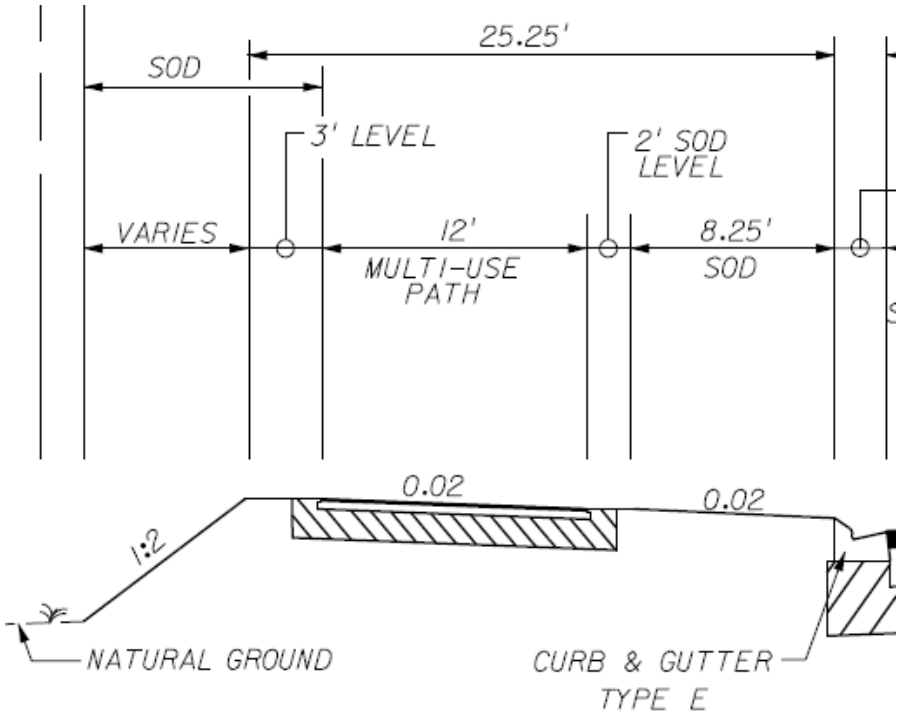

VE Idea Detail (Suburban Section)

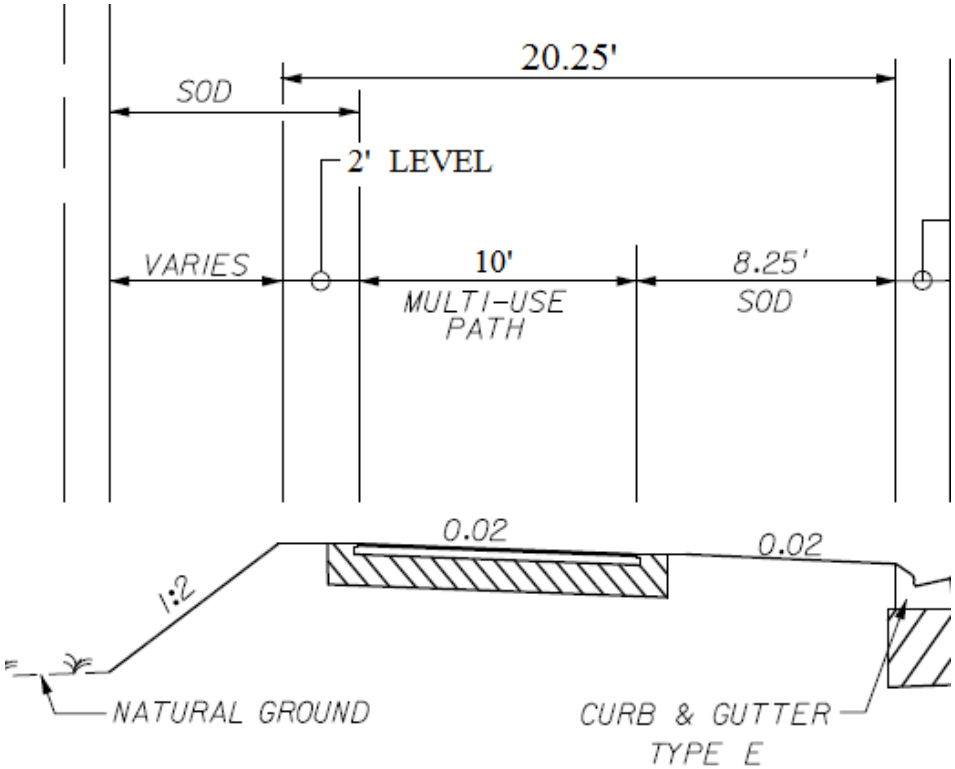

Planned Detail vs. VE Idea Detail Blackwater Bridge

Planned Detail Blackwater Bridge

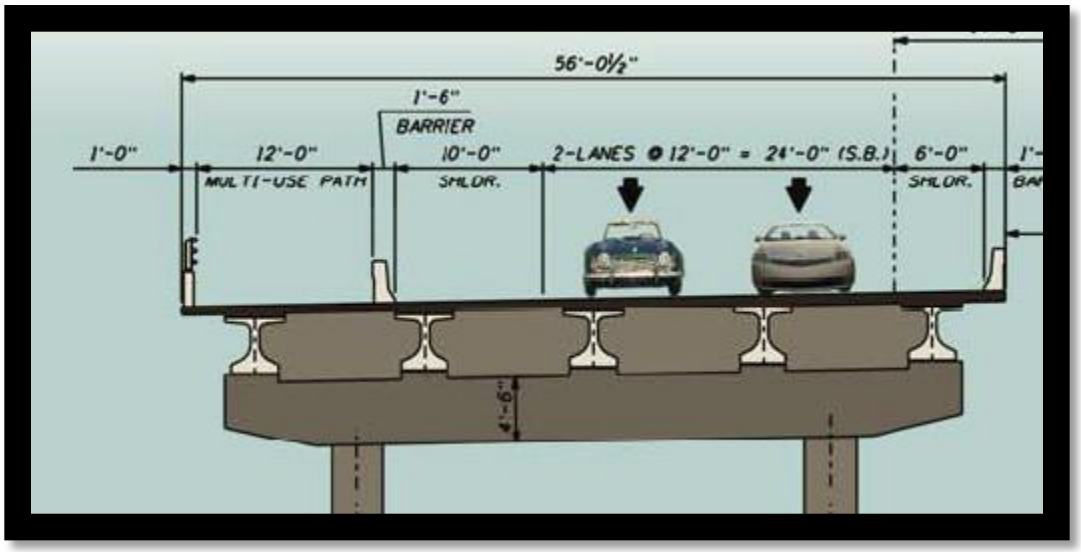

VE Idea Detail Blackwater Bridge

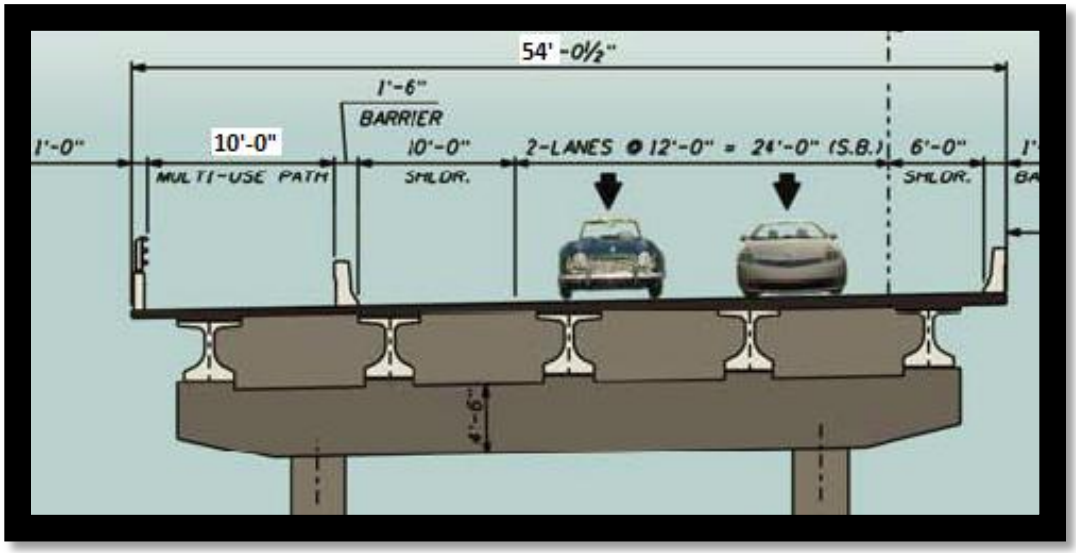

Planned Detail vs. VE Idea Detail Station 257+00

Planned Detail

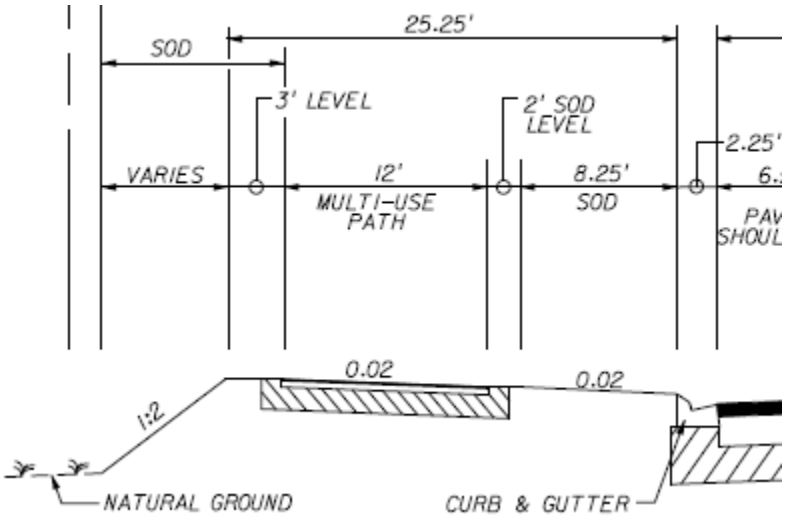

VE Idea Detail

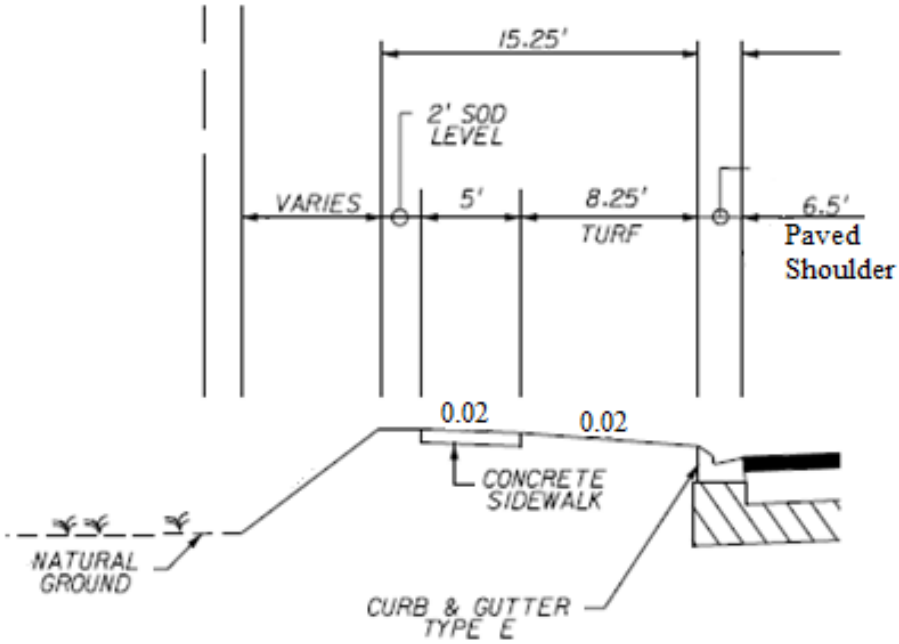

Planned Detail vs. VE Idea Detail Clear Creek Bridge

Clear Creek (Planned)

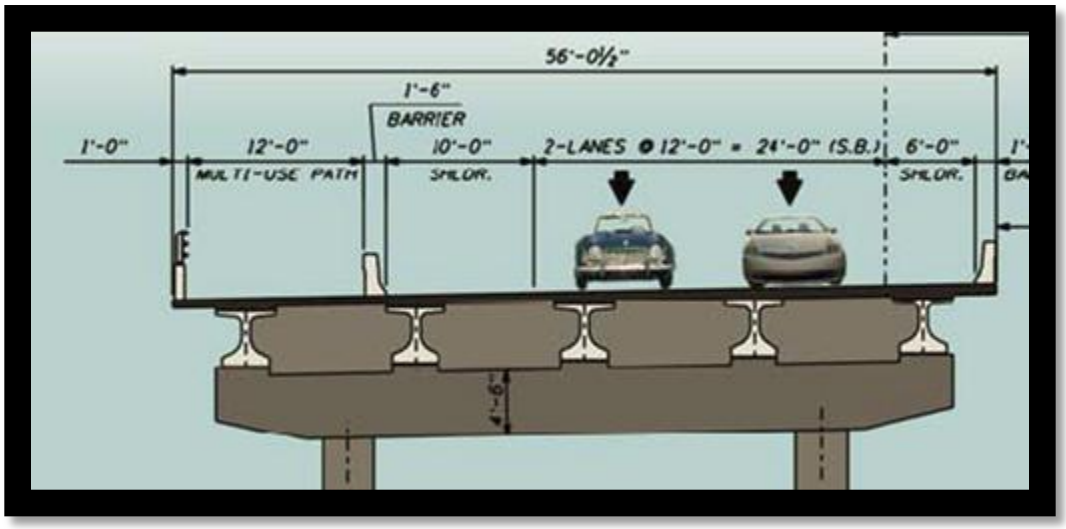

Clear Creek (VE Idea Detail)

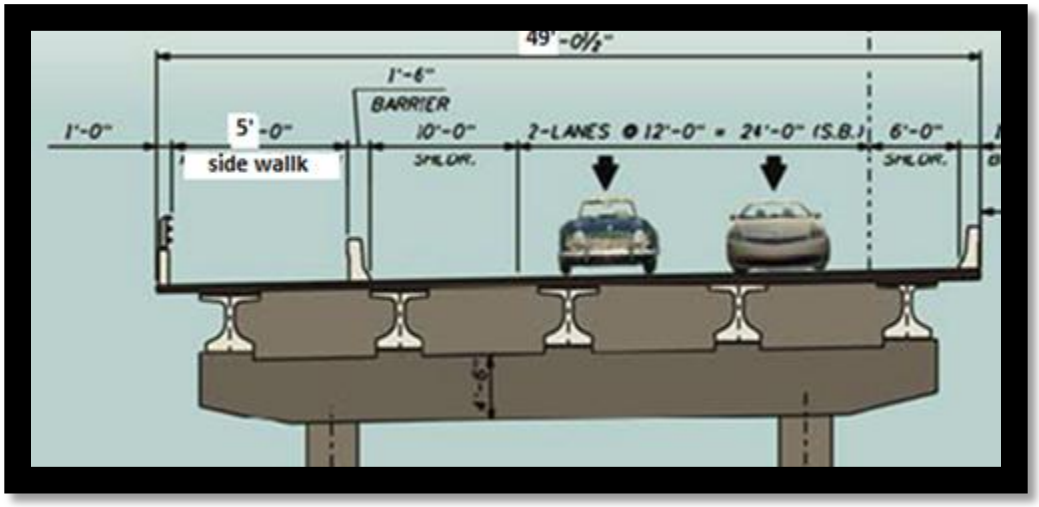

Calculations for Alternate 1 (Urban)

Reduction in Quantities for Alt. 1 Urban Section

Blackwater Creek (5560 feet x 2 feet reduction) = **11,120 SF**

Asphalt 1”= 110 lbs/SY x (1SY/ 9SF) x (1TN/2000 lbs) x 9,800 ft x 2 ft = **120 tons**

Base = (2ft x 9,800 ft)/9 SF/SY= **2,178 SY**

Stabilization = (2 ft x 9,800 ft) / 9 SF/SY = **2178 SY**

Embankment= 22.00’-16.00’ = 6 ft (see typical section sheet 4)

(6ft x 4.5ft (avg. fill height) x 9,800 ft)/27CF/CY= **9,800 CY**

Sod (4 ft x 9,800 ft) / 9 SF/SY = **4356 SY**

Cost Comparison Alternate 1 (Urban)

SR 87 416748-3 *(URBAN) to STA 257+00* **VALUE ENGINEERING IDEA No. 4** **COST COMPARISON SHEET**						
DESCRIPTION	**UNITS**	**UNIT COST**	**Reduced QTY.**	**Reduced COST**	**V.E. QTY.**	**V.E. COST**
Apshalt	SY	$104.35	120	$12,499		$0
Base	SY	$7.60	2178	$16,551		$0
Embankment	CY	$3.96	9800	$38,808		$0
Blackwater Bridge Savings	SF	$126.50	11120	$1,406,680		$0
Stabilization	SY	$2.27	2178	$4,944		$0
Sod	SY	$2.33	4356	$10,148		$0
				$0		$0
SUBTOTAL				**$1,489,630**		**$0**
MOBILIZATION (THIS IS SUB+CONTIN. X % =)		**5.0%**		$78,206		$0
MOT		**2.0%**		$29,793		$0
CONTINGENCIES		**5.0%**		$74,481		$0
CEI		**10.0%**		$167,211		$0
			-	$0		$0
GRAND TOTAL				**$1,839,321**		**$0**
POTENTIAL SAVINGS:				**$1,839,321**		

Calculations for Alternate 1 (Suburban)

Reduction in Quantities for Alt. 1 Suburban Section

Asphalt 1”= 110 lbs/SY x (1SY/ 9SF) x (1TN/2000 lbs) x 340 ft x 2 ft = **4 tons**

Base = (2ft x 340 ft)/9 SF/SY= **76 SY**

Stabilization = (2 ft x 340 ft) / 9 SF/SY = **76 SY**

Embankment= 25.25’-15.25’ = 5 ft (see typical section sheet 4)

(5ft x 4.5ft (avg. fill height) x 340 ft)/27CF/CY= **283 CY**

Sod (4 ft x 340 ft) / 9 SF/SY = **113 SY**

Cost Comparison Alternate 1 (Suburban)

SR 87 416748-3 *(SUBURBAN) to STA 257+00* **VALUE ENGINEERING IDEA No. 4** **COST COMPARISON SHEET**						
DESCRIPTION	**UNITS**	**UNIT COST**	**Reduced QTY.**	**Reduced COST**	**V.E. QTY.**	**V.E. COST**
Apshalt	SY	$104.35	4	$434		$0
Base	SY	$7.60	76	$574		$0
Embankment	CY	$3.96	283	$1,122		$0
Clearcreek Bridge Savings	SF	$126.50	0	$0		$0
Stabilization	SY	$2.27	76	$172		$0
Sod	SY	$2.33	113	$264		$0
				$0		$0
SUBTOTAL				**$2,565**		**$0**
MOBILIZATION (THIS IS SUB+CONTIN. X % =)		**5.0%**		$135		$0
MOT		**2.0%**		$51		$0
CONTINGENCIES		**5.0%**		$128		$0
CEI		**10.0%**		$288		$0
			-	$0		$0
GRAND TOTAL				**$3,168**		**$0**
POTENTIAL SAVINGS:				**$3,168**		

Calculations for Alternate 1

Reduction in Quantities for Alternate 1

Clear Creek Bridge 180 feet x 7 feet reduction = **1,260 SF**

Asphalt 1”= 110 lbs/SY x (1SY/ 9SF) x (1TN/2000 lbs) x 19,635 ft x 12 ft = **1,440 tons**

Base = 12ft + (2 x 4”)/12= (12.667ft x 19,635 ft)/9 SF/SY= **27,635 SY**

Stabilization = 12ft + (2 x 2’) = (16 ft x 19,635 ft) / 9 SF/SY = **34,907 SY**

Embankment= 25.25’-15.25’ = 10 ft (see typical section sheet 4)

(10ft x 4.5ft (avg. fill height) x 19,635 ft)/27CF/CY= **32,725 CY**

Sod (11.25 ft x 19,635 ft) / 9 SF/SY = **24,544 SY**

Increase in Quantities for Alternate 1

Performance Turf (8.25 ft x 19,635 ft) / 9 SF/SY= **17,999 SY**

Sidewalk (5ft x 19,635 ft) / 9 SF/SY = **10,908 SY**

Cost Comparison Alternate 1

SR 87 416748-3 Terminate Multi-Use Path at Heritage Trail add 5' Sidewalk
(ALT 1) **VALUE ENGINEERING IDEA No. 4**
COST COMPARISON SHEET

DESCRIPTION	UNITS	UNIT COST	Reduced QTY.	Reduced COST	Added QTY.	Added COST
Clear Creek Bridge	SF	$126.50	1260	$159,390		$0
Asphalt Multi Use Path	TN	$104.35	1440	$150,254		$0
Base for Path	SY	$7.60	27635	$210,027		$0
Stabilization for Path	SY	$2.27	34907	$79,238		$0
Embankment	CY	$3.96	32725	$129,591		$0
Sod	SY	$2.33	24544	$57,187		$0
Perf. Turf	SY	$0.75		$0	17999	$13,499
Sidewalk	SY	$26.96		$0	10908	$294,089
SUBTOTAL				**$785,687**		**$307,588**
MOBILIZATION (THIS IS SUB+CONTIN. X % =)		**5.0%**		$41,249		$16,148
MOT		**2.0%**		$15,714		$6,152
CONTINGENCIES		**5.0%**		$39,284		$15,379
CEI		**10.0%**		$88,193		$34,527
			-	$0		$0
GRAND TOTAL				**$970,127**		**$379,794**

POTENTIAL SAVINGS: $590,333

Calculations for Alternate 2

Reduction in Quantities for Alternate 2

Clear Creek Bridge (180 feet x 7 feet reduction)/9 SF/SY = **1,260 SY**

Asphalt 1”= 110 lbs/SY x (1SY/ 9SF) x (1TN/2000 lbs) x 24,620 ft x 12 ft =**1,805 tons**

Base = 12ft + (2 x 4”)/12= (12.667ft x 24,620 ft)/9 SF/SY= **34,651 SY**

Stabilization = 12ft + (2 x 2’) = (16 ft x 24,620 ft) / 9 SF/SY = **43,769 SY**

Embankment= 25.25’-15.25’ = 10 ft (see typical section sheet 4)

(10ft x 4.5ft (avg. fill height) x 24,620 ft)/27CF/CY= **41,033 CY**

Sod (11.25 ft x 24,620 ft) / 9 SF/SY = **30,775 SY**

Increase in Quantities for Alternate 2

Performance Turf (8.25 ft x 24,620 ft) / 9 SF/SY= **22,568 SY**

Sidewalk (5ft x 24,620 ft) / 9 SF/SY = **13,678 SY**

Cost Comparison Alternate 2

SR 87 416748-3 Terminate Multi-Use Path at Heritage Trail add 5' Sidewalk
(ALT 2) **VALUE ENGINEERING IDEA No. 4**
COST COMPARISON SHEET

DESCRIPTION	UNITS	UNIT COST	Reduced QTY.	Reduced COST	Added QTY.	Added COST
Clear Creek Bridge	SF	$126.50	1260	$159,390		$0
Asphalt Multi Use Path	TN	$104.35	1805	$188,400		$0
Base for Path	SY	$7.60	34651	$263,350		$0
Stabilization for Path	SY	$2.27	43769	$99,355		$0
Embankment	CY	$3.96	41033	$162,492		$0
Sod	SY	$2.33	30775	$71,706		$0
Perf. Turf	SY	$0.75		$0	22568	$16,926
Sidewalk	SY	$26.96		$0	13678	$368,753
SUBTOTAL				**$944,693**		**$385,679**
MOBILIZATION (THIS IS SUB+CONTIN. X % =)		**5.0%**		$49,596		$20,248
MOT		**2.0%**		$18,894		$7,714
CONTINGENCIES		**5.0%**		$47,235		$19,284
CEI		**10.0%**		$106,042		$43,292
			-	$0		$0
GRAND TOTAL				**$1,166,460**		**$476,217**

POTENTIAL SAVINGS: $690,243

Planned Detail vs. VE Idea Detail (Urban)

Planned Detail Urban Section

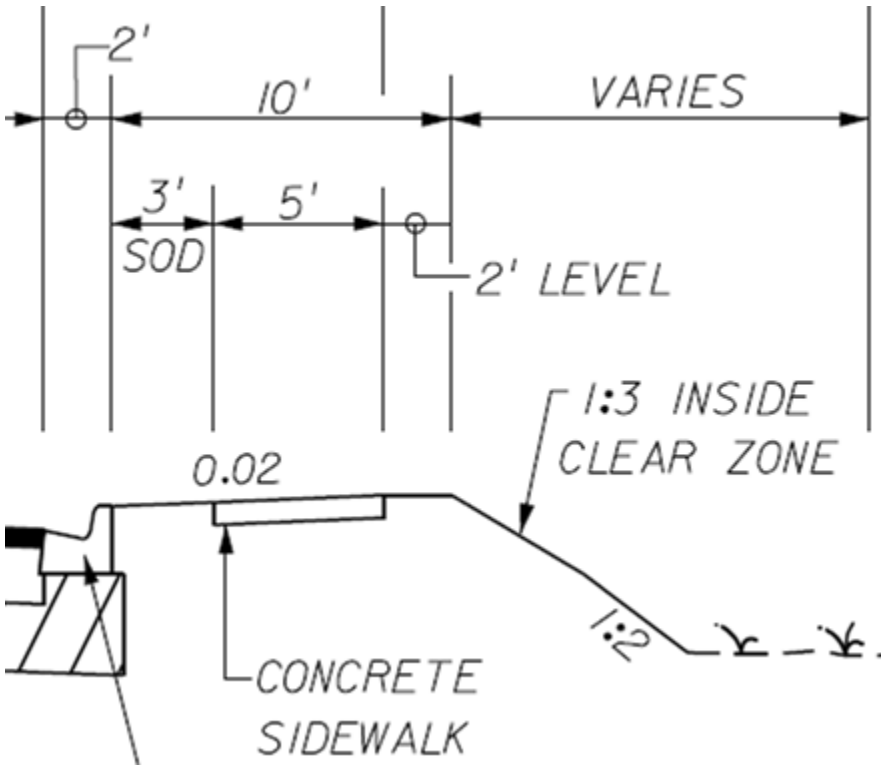

Planned Detail vs. VE Idea Detail (Suburban)

Planned Detail Suburban Section

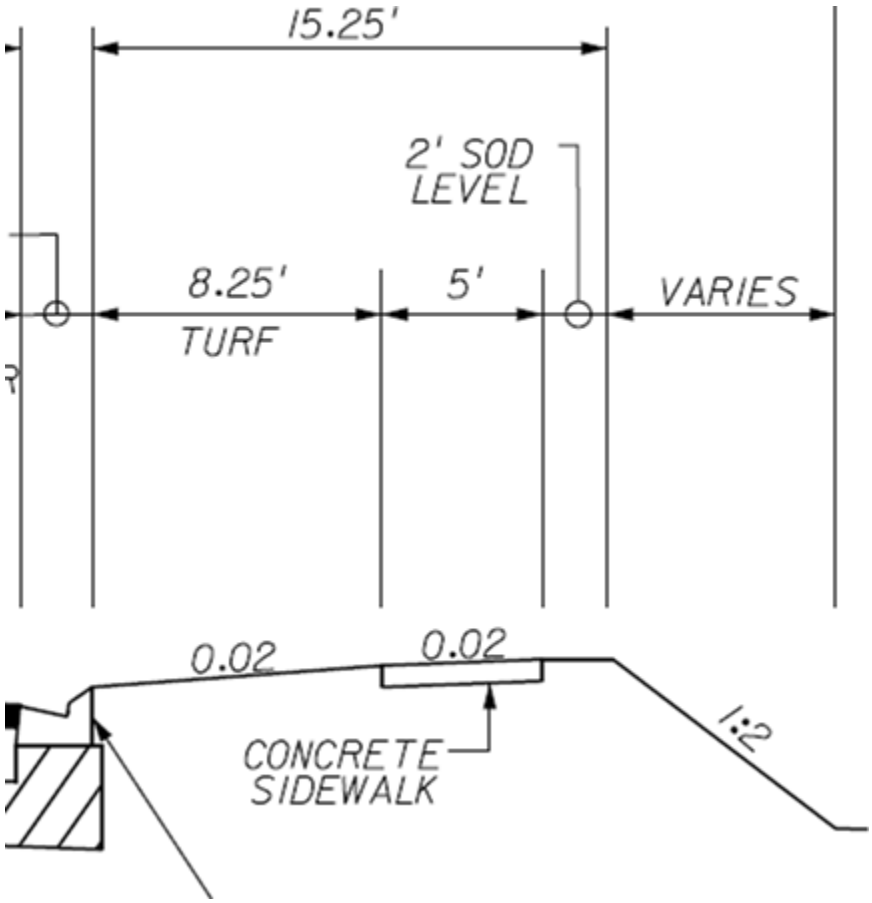

Planned Detail vs. VE Idea Detail

VE Idea Detail for Urban and Suburban Sections

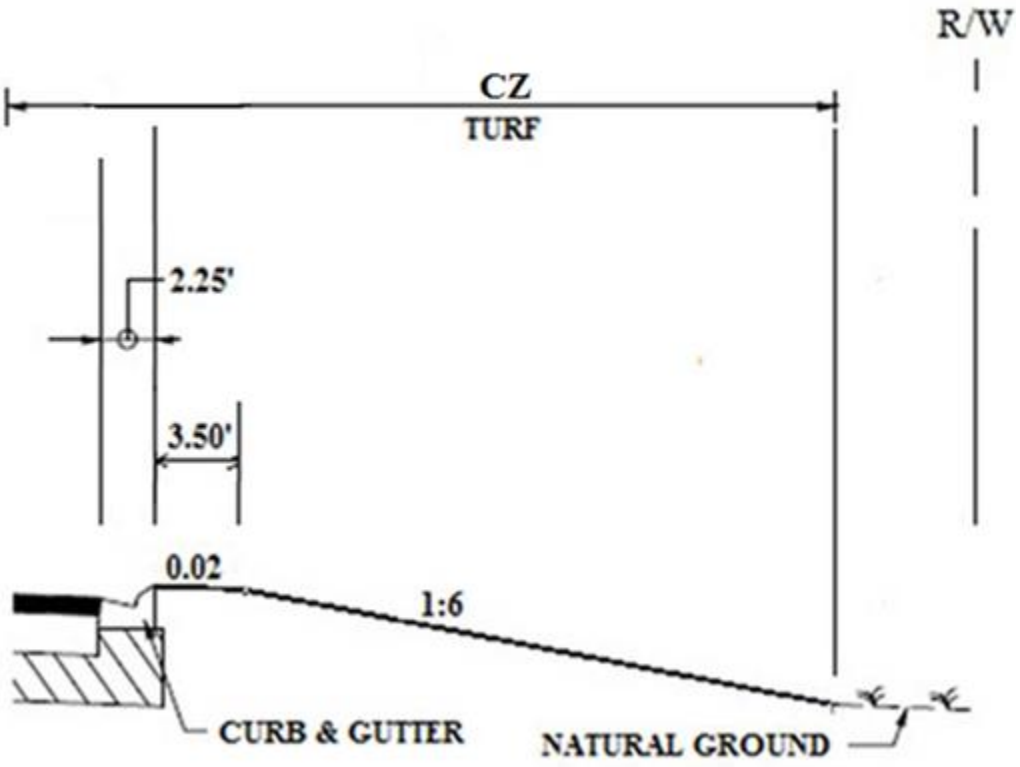

Calculations for Alternate 1 (Urban)

Reduction in Quantities for Alt. 1 Urban Section

Blackwater Creek (5,560 feet x 6 feet reduction) = **33,360 SF**

Sidewalk (13,920 feet x 5 feet reduction)/9 SF/SY = **7,733 SY**

Embankment= 12.68 SF (See Urban CADD Drawing)

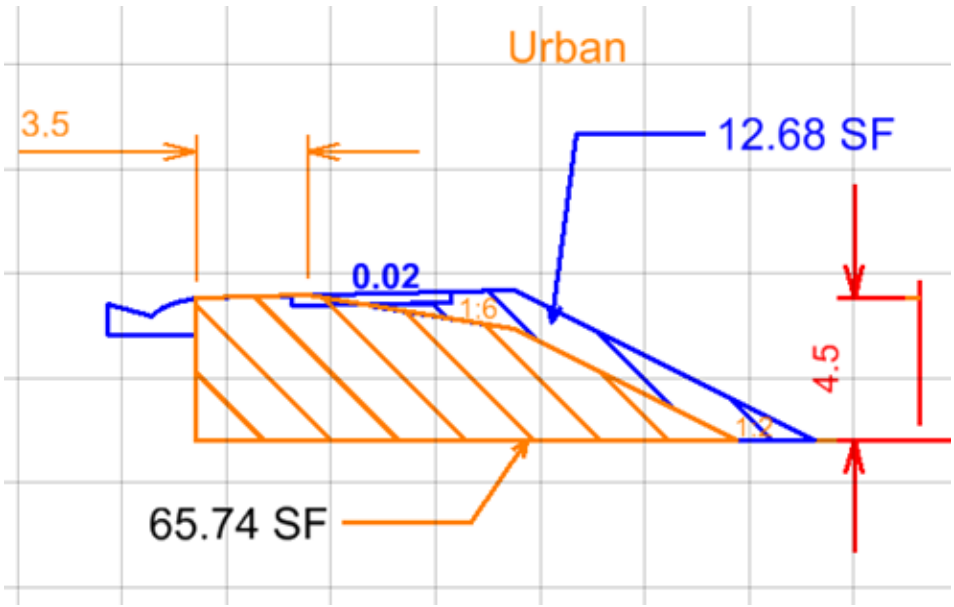

(12.68) x 13,920 ft)/27CF/CY= **6,537 CY**

Sod (2 ft x 13,920 ft) / 9 SF/SY = **3,093 SY**

Turf (7 ft x 13,920 ft) / 9 SF/SY = **10,827 SY**

Calculations for Alternate 1 (Urban)

Reduction in Quantities for Alt. 1 Suburban Section

Clearwater Creek (180 feet x 6 feet reduction) = **1,080 SF**

Sidewalk (17,989 feet x 5 feet reduction)/9 SF/SY = **9,994 SY**

Embankment= 26.67 SF (See Suburban CADD Drawing)

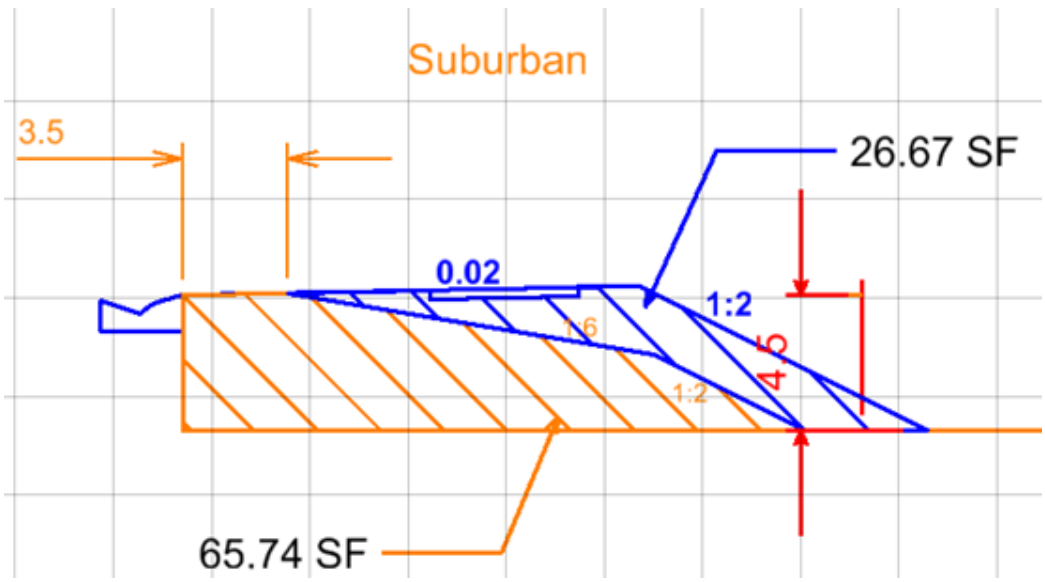

(26.67) x 17,989 ft)/27CF/CY= **17,769 CY**

Sod (2 ft x 17,989 ft) / 9 SF/SY = **3,998 SY**

Turf (7 ft x 17,989 ft) / 9 SF/SY = **13,991 SY**

Cost Comparison Alternate 1 (Deletion of 5' Sidewalk)

SR 87 416748-3 (Delete 5' Sidewalk entire project East side)
(ALT 1) **VALUE ENGINEERING IDEA No. 6**
COST COMPARISON SHEET

DESCRIPTION	UNITS	UNIT COST	Reduced QTY.	Reduced COST	Added QTY.	Added COST
5' Sidewalk (East Side - Urban & Suburban)	SY	$26.96	17,727	$477,926		$ -
Bridges (6' width)	SF	$126.50	34,440	$4,356,660		$ -
Embankment	CY	$3.96	24,306	$96,253		$ -
Performance Turf, Sod	SY	$2.33	7,091	$16,522		$ -
				$0		$ -
Performance Turf	SY	$0.75		$0	24818	$ 18,614
				$0		$ -
				$0		$ -
SUBTOTAL				**$4,947,361**		**$ 18,614**
MOBILIZATION (THIS IS SUB+CONTIN. X % =)		**5.0%**		$259,736		$ 977
MOT		**2.0%**		$98,947		$ 372
CONTINGENCIES		**5.0%**		$247,368		$ 931
CEI		**10.0%**		$555,341		$ 2,089
			-	$0		$ -
GRAND TOTAL				**$6,108,754**		**$ 22,983**

POTENTIAL SAVINGS: $6,085,771

Calculations for Alternate 2 (Urban)

Reduction in Quantities for Alt. 2 Urban Section

Blackwater Creek (5,560 feet x 6 feet reduction) = **33,360 SF**

Sidewalk (13,920 feet x 5 feet reduction)/9 SF/SY = **7,733 SY**

Embankment= 12.68 SF (See Urban CADD Drawing)

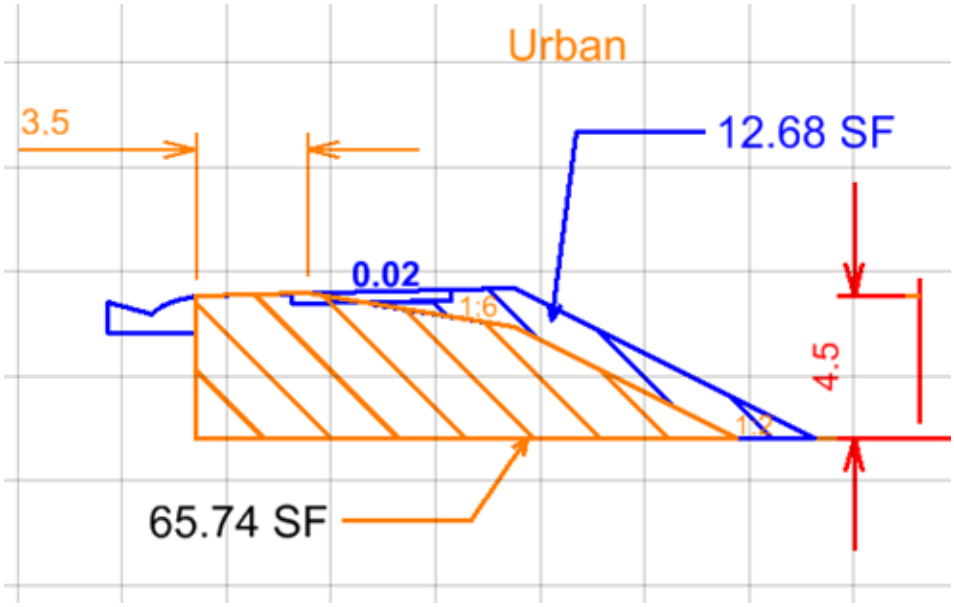

(12.68) x 13,920 ft)/27CF/CY= **6,537 CY**

Sod (2 ft x 13,920 ft) / 9 SF/SY = **3,093 SY**

Turf (7 ft x 13,920 ft) / 9 SF/SY = **10,827 SY**

Calculations for Alternate 2 (Urban)

Reduction in Quantities for Alt. 2 Suburban Section

Clearwater Creek (180 feet x 6 feet reduction) = **1,080 SF**

Sidewalk (20,904 feet x 5 feet reduction)/9 SF/SY = **11,613 SY**

Embankment= 26.67 SF (See Suburban CADD Drawing)

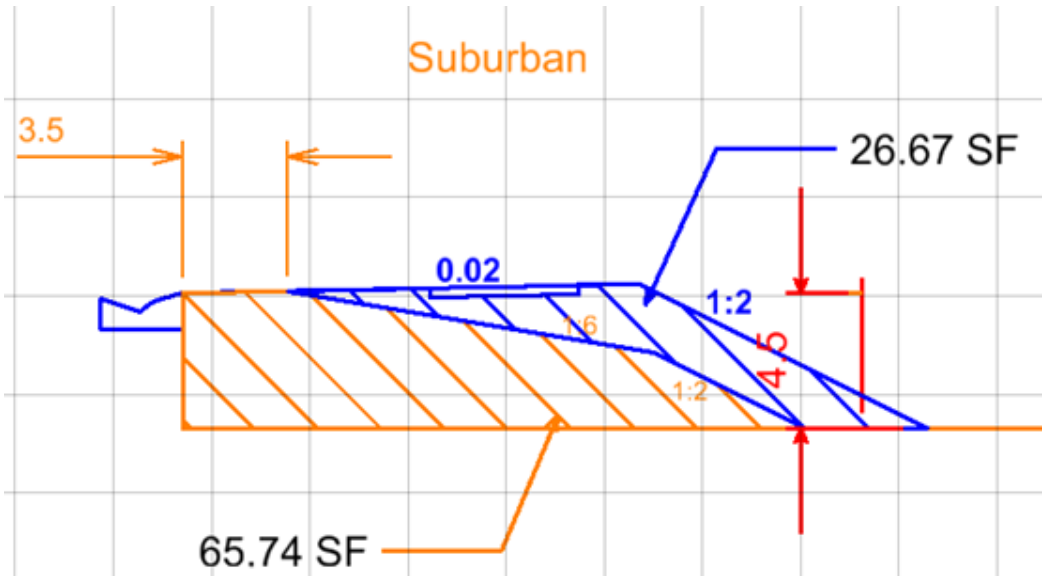

(26.67) x 20,904 ft)/27CF/CY= **20,649 CY**

Sod (2 ft x 20,904 ft) / 9 SF/SY = **4,645 SY**

Turf (7 ft x 20,904 ft) / 9 SF/SY = **16,259 SY**

Cost Comparison Alternate 2 (Deletion of 5' Sidewalk)

SR 87 416748-3 (Delete 5' Sidewalk entire project East side)
(ALT 2) **VALUE ENGINEERING IDEA No. 6**
COST COMPARISON SHEET

DESCRIPTION	UNITS	UNIT COST	Reduced QTY.	Reduced COST	Added QTY.	Added COST
5' Sidewalk (East Side - Urban & Suburban)	SY	$26.96	19,347	$521,586		$ -
Bridges (6' width)	SF	$126.50	34,440	$4,356,660		$ -
Embankment	CY	$3.96	27,186	$107,656		$ -
Performance Turf, Sod	SY	$2.33	7,739	$18,031		$ -
				$0		$ -
Performance Turf	SY	$0.75		$0	27085	$ 20,314
				$0		$ -
				$0		$ -
SUBTOTAL				**$5,003,933**		**$ 20,314**
MOBILIZATION (THIS IS SUB+CONTIN. X % =)		**5.0%**		$262,706		$ 1,066
MOT		**2.0%**		$100,079		$ 406
CONTINGENCIES		**5.0%**		$250,197		$ 1,016
CEI		**10.0%**		$561,691		$ 2,280
			-	$0		$ -
GRAND TOTAL				**$6,178,606**		**$ 25,083**

POTENTIAL SAVINGS: $6,153,523

VE Idea 8

This idea is to build both Blackwater and Clear Creek bridges on the eastern alignment (north bound lanes) with a five foot sidewalk and one foot railing. However, the five foot sidewalk will not be built for the rest of the project until a future date when the area is developed and sidewalk is needed. Therefore, this idea calculates the cost savings for deletion of the five foot sidewalk on the east side of the north bound lanes for the entire length of the project with the only exception being the bridges at Blackwater River and Clear Creek.

.

Planned Detail vs. VE Idea Detail (Urban)

Planned Detail Urban Section

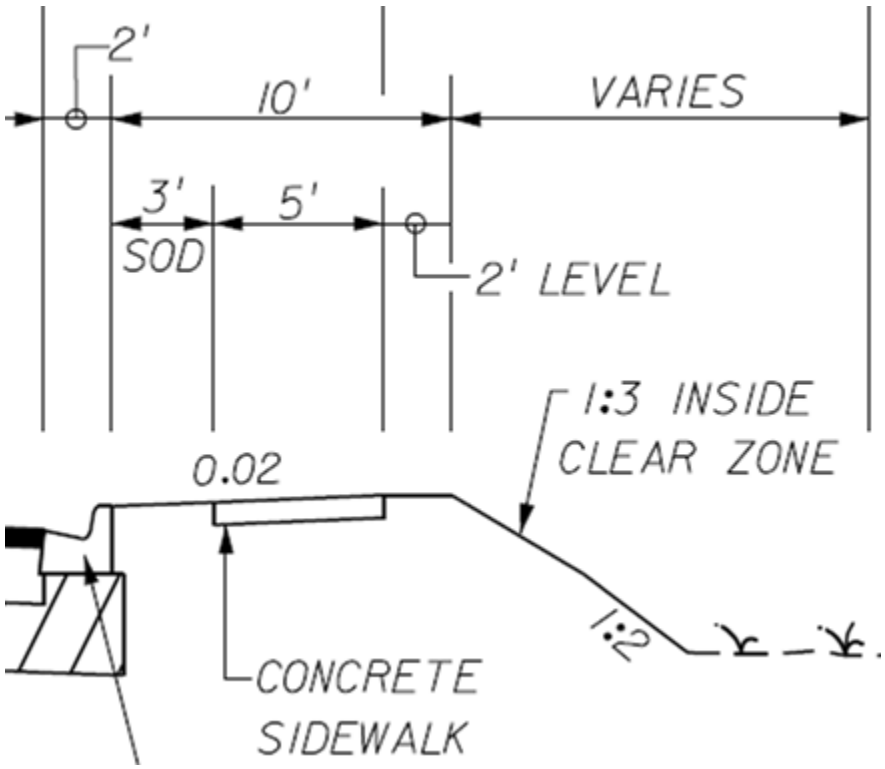

Planned Detail vs. VE Idea Detail (Suburban)

Planned Detail Suburban Section

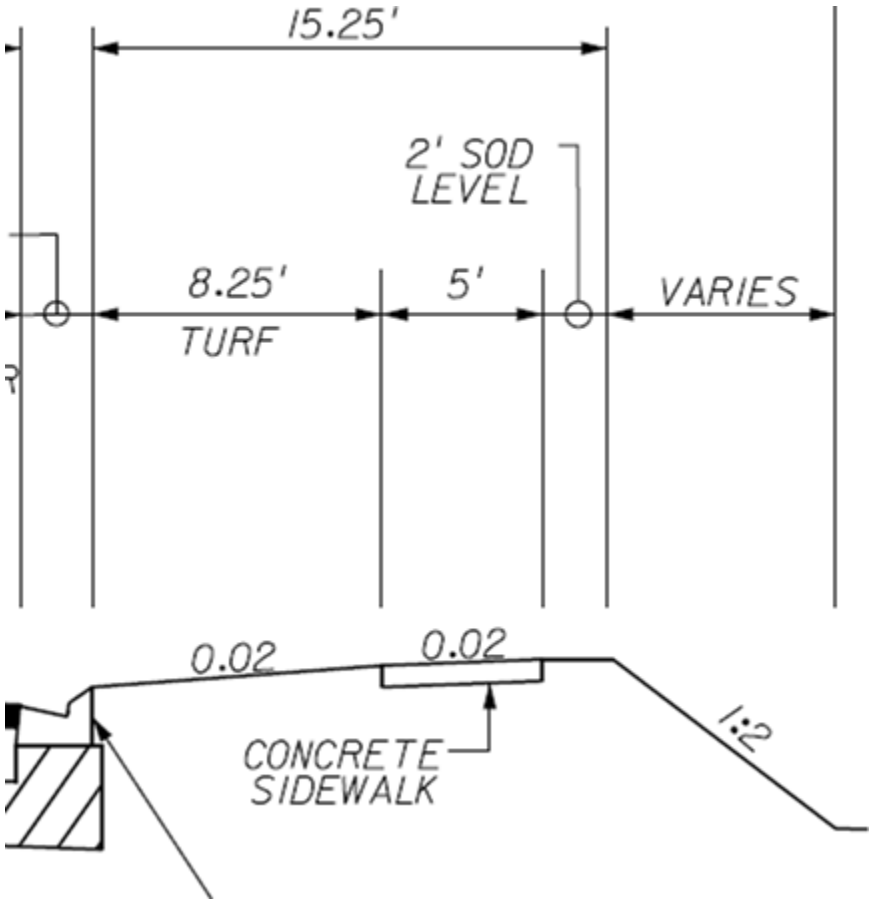

Planned Detail vs. VE Idea Detail

VE Idea Detail for Urban and Suburban Sections

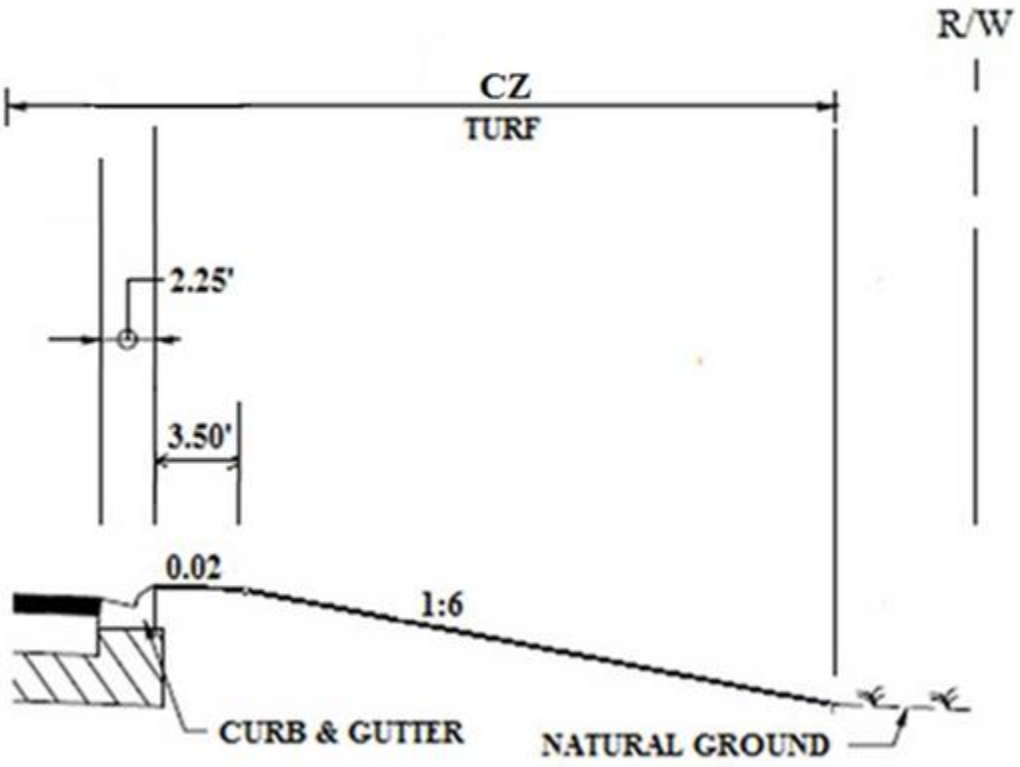

Calculations for Alternate 1 (Urban)

Reduction in Quantities for Alt. 1 Urban Section

Sidewalk (13,920 feet x 5 feet reduction)/9 SF/SY = **7,733 SY**

Embankment= 12.68 SF (See Urban CADD Drawing)

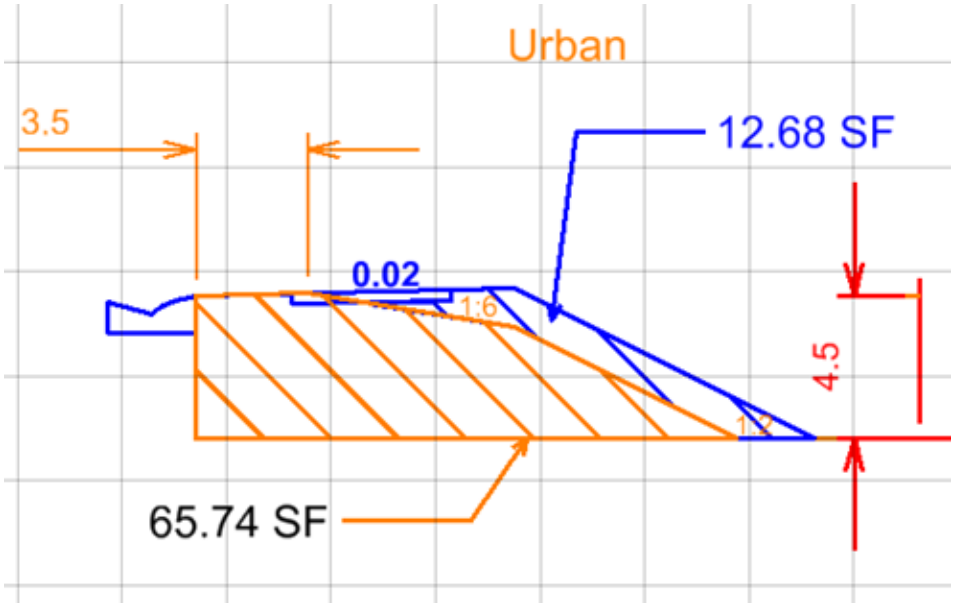

(12.68) x 13,920 ft)/27CF/CY= **6,537 CY**

Sod (2 ft x 13,920 ft) / 9 SF/SY = **3,093 SY**

Turf (7 ft x 13,920 ft) / 9 SF/SY = **10,827 SY**

Calculations for Alternate 1 (Urban)

Reduction in Quantities for Alt. 1 Suburban Section

Sidewalk (17,989 feet x 5 feet reduction)/9 SF/SY = **9,994 SY**

Embankment= 26.67 SF (See Suburban CADD Drawing)

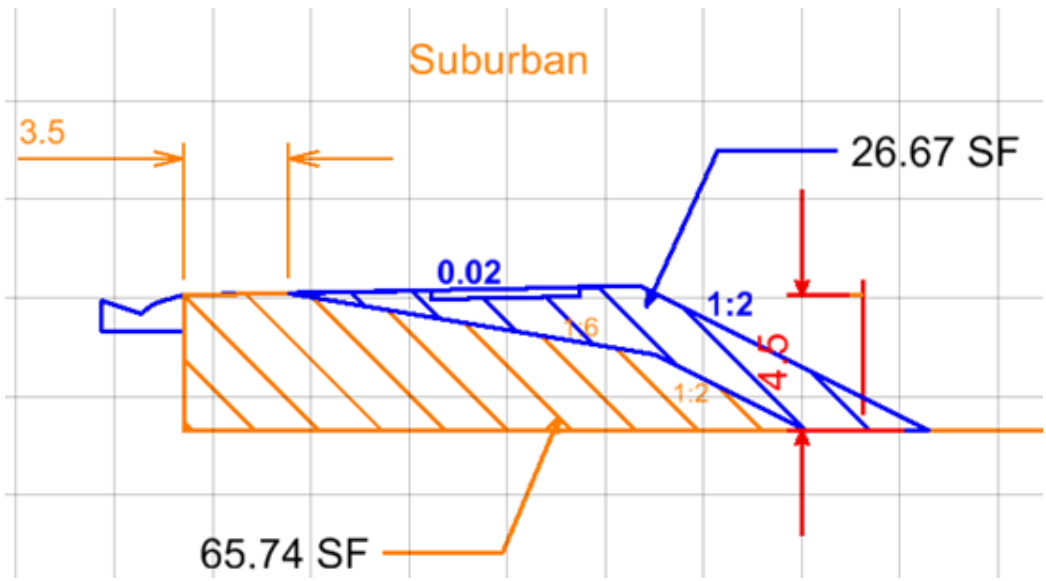

(26.67) x 17,989 ft)/27CF/CY= **17,769 CY**

Sod (2 ft x 17,989 ft) / 9 SF/SY = **3,998 SY**

Turf (7 ft x 17,989 ft) / 9 SF/SY = **13,991 SY**

Cost Comparison Alternate 1 (Deletion of 5' Sidewalk, except bridges)

SR 87 416748-3 (Delete 5' Sidewalk East side, except bridges)
(ALT 1) **VALUE ENGINEERING IDEA No. 8**
COST COMPARISON SHEET

DESCRIPTION	UNITS	UNIT COST	Reduced QTY.	Reduced COST	Added QTY.	Added COST
5' Sidewalk (East Side - Urban & Suburban)	SY	$26.96	17,727	$477,926		$ -
Embankment	CY	$3.96	24,306	$96,253		$ -
Performance Turf, Sod	SY	$2.33	7,091	$16,522		$ -
				$0		$ -
Performance Turf	SY	$0.75		$0	24818	$ 18,614
				$0		$ -
				$0		$ -
SUBTOTAL				**$590,701**		**$ 18,614**
MOBILIZATION (THIS IS SUB+CONTIN. X % =)		**5.0%**		$31,012		$ 977
MOT		**2.0%**		$11,814		$ 372
CONTINGENCIES		**5.0%**		$29,535		$ 931
CEI		**10.0%**		$66,306		$ 2,089
			-	$0		$ -
GRAND TOTAL				**$729,368**		**$ 22,983**

POTENTIAL SAVINGS: $706,385

Calculations for Alternate 2 (Urban)

Reduction in Quantities for Alt. 2 Urban Section

Sidewalk (13,920 feet x 5 feet reduction)/9 SF/SY = **7,733 SY**

Embankment= 12.68 SF (See Urban CADD Drawing)

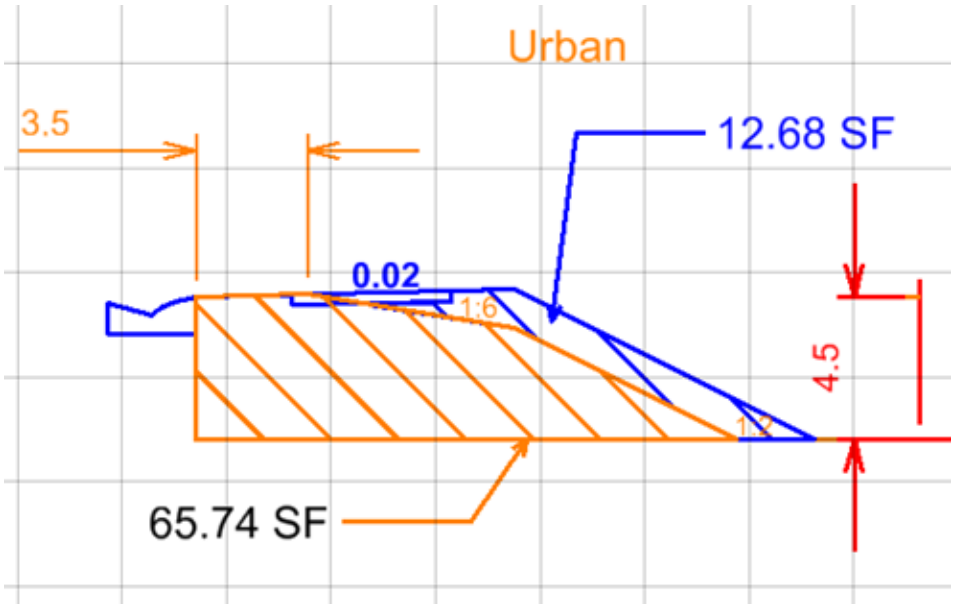

(12.68) x 13,920 ft)/27CF/CY= **6,537 CY**

Sod (2 ft x 13,920 ft) / 9 SF/SY = **3,093 SY**

Turf (7 ft x 13,920 ft) / 9 SF/SY = **10,827 SY**

Calculations for Alternate 2 (Urban)

Reduction in Quantities for Alt. 2 Suburban Section

Sidewalk (20,904 feet x 5 feet reduction)/9 SF/SY = **11,613 SY**

Embankment= 26.67 SF (See Suburban CADD Drawing)

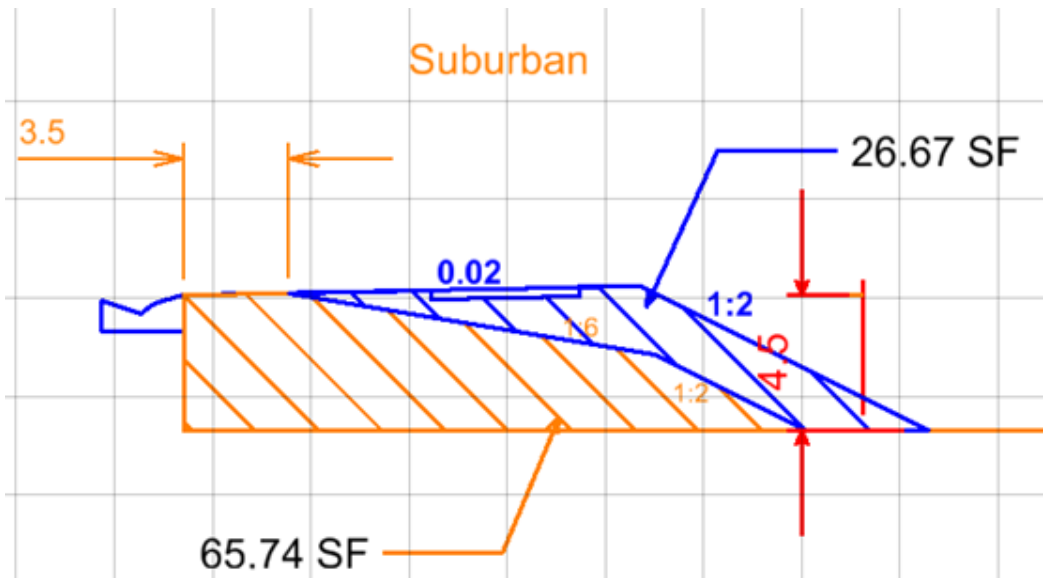

(26.67) x 20,904 ft)/27CF/CY= **20,649 CY**

Sod (2 ft x 20,904 ft) / 9 SF/SY = **4,645 SY**

Turf (7 ft x 20,904 ft) / 9 SF/SY = **16,259 SY**

Cost Comparison Alternate 2 (Deletion of 5' Sidewalk, except bridges)

SR 87 416748-3 (Delete 5' Sidewalk East side, except bridges)
(ALT 2) **VALUE ENGINEERING IDEA No. 8**
COST COMPARISON SHEET

DESCRIPTION	UNITS	UNIT COST	Reduced QTY.	Reduced COST	Added QTY.	Added COST
5' Sidewalk (East Side - Urban & Suburban)	SY	$26.96	19,347	$521,586		$ -
Embankment	CY	$3.96	27,186	$107,656		$ -
Performance Turf, Sod	SY	$2.33	7,739	$18,031		$ -
				$0		$ -
Performance Turf	SY	$0.75		$0	27085	$ 20,314
				$0		$ -
				$0		$ -
SUBTOTAL				**$647,273**		**$ 20,314**
MOBILIZATION (THIS IS SUB+CONTIN. X % =)		**5.0%**		$33,982		$ 1,066
MOT		**2.0%**		$12,945		$ 406
CONTINGENCIES		**5.0%**		$32,364		$ 1,016
CEI		**10.0%**		$72,656		$ 2,280
			-	$0		$ -
GRAND TOTAL				**$799,220**		**$ 25,083**

POTENTIAL SAVINGS: $774,137

VE Idea 9

VE Idea 9 proposes to use a rural typical section and open drainage system from station 253+60 to station 441+89.50 in lieu of the suburban typical and closed drainage system. This will reduce pipe items, embankment, sidewalk, sod, etc. A recent change as a result of House Bill 599 allows co-mingling water without having to treat off site water.

House Bill 599

(6) It is the intent of the Legislature that the governing board or department exercise flexibility in the permitting of stormwater management systems associated with the construction or alteration of systems serving state transportation projects and facilities. Because of the unique limitations of linear facilities, the governing board or department shall balance the expenditure of public funds for stormwater treatment for state transportation projects and facilities with the benefits to the public in providing the most cost-efficient and effective method of achieving the treatment objectives. In consideration thereof, the governing board or department shall allow alternatives to onsite treatment, including, but not limited to, regional stormwater treatment systems. The Department of Transportation is responsible for treating stormwater generated from state transportation projects but is not responsible for the abatement of pollutants and flows entering its stormwater management systems from offsite sources; however, this subsection does not prohibit the Department of Transportation from receiving and managing such pollutants and flows when cost effective and prudent. Further, in association with right-of-way acquisition for state transportation projects, the Department of Transportation is responsible for providing stormwater treatment and attenuation for the acquired right-of-way but is not responsible for modifying permits for adjacent lands affected by right-of-way acquisition when it is not the permittee. The governing board or department may establish, by rule, specific criteria to implement the management and treatment alternatives and activities under this subsection.

Planned Detail vs. VE Idea Detail

Planned (Suburban Typical)

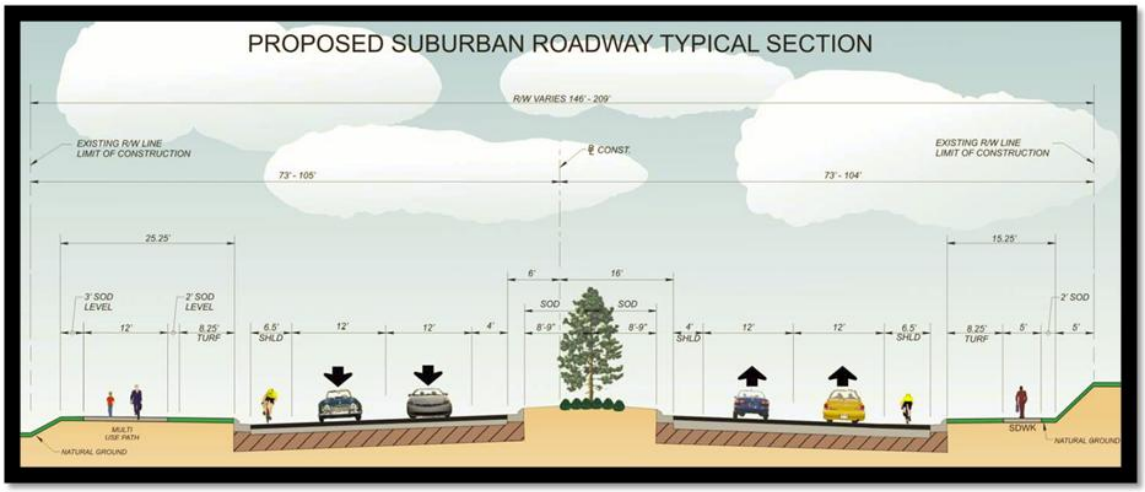

VE Idea (Rural Typical)

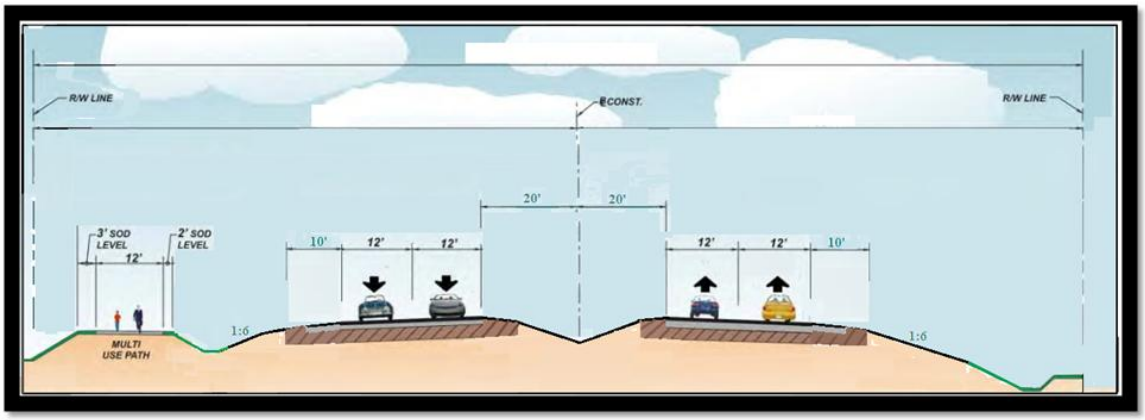

Cost Comparison for Alternate 1

SR 87 416748-3 (Rural)
(ALT 1) **VALUE ENGINEERING IDEA No. 9**
COST COMPARISON SHEET

DESCRIPTION	UNITS	UNIT COST	Reduced QTY.	Reduced COST	Added QTY.	Added COST
Clearing & Grubbing	AC	$7,500.00			30	$226,950
Embankment	CY	$3.96	401,569	$1,590,213		
Stabilization	SY	$2.27			9792	$22,227
Optional Base 9	SY	$16.29	41,175	$670,742		
Superpave Asphaltic Traffic C	TN	$85.87	7,250	$622,521		
Aspahltic Concrete FC	TN	$104.59	7,893	$825,523		
Painted Pavement Markings, White (Bike Lanes)	EA	$46.80	80	$3,744		
Type E Curb & Gutter	LF	$12.01	18,830	$226,149		
Type E Curb & Gutter	LF	$12.01	18,830	$226,149		
Sidewalk (4")	SY	$26.96	10,461	$282,033		
Performance Turf	SY	$0.75			49167	$36,876
Sediment Barrier	LF	$1.61			12298	$19,800
Inlet Protection System	EA	$109.72	160	$17,555		
Litter Removal	AC	$26.79			80	$2,134
Mowing	AC	$59.57			80	$4,746
Optional Base 4	SY	$12.86			22303	$286,819
Superpave Aspahltic Concrete	TN	$85.87			1151	$98,813
Superpave Asphaltic Traffic C	TN	$85.87			837	$71,864
Inlet Curb, Type P-5<10	EA	$2,997.62	129	$386,693		
Inlet Curb, Type J-5<10	EA	$4,476.17	36	$161,142		

Cost Comparison for Alternate 1

SR 87 416748-3 (Rural) *(ALT 1)* **VALUE ENGINEERING IDEA No. 9** **COST COMPARISON SHEET**						
DESCRIPTION	**UNITS**	**UNIT COST**	**Reduced QTY.**	**Reduced COST**	**Added QTY.**	**Added COST**
Inlets, DT Bot,Type C,<10	EA	$2,007.47	18	$36,134		
Manholes, P-7,<10	EA	$2,794.43	18	$50,300		
Pipe Culvert 24"S/CD	LF	$44.17	8,209	$362,592		
Pipe Culvert 36"S/CD	LF	$70.33			208	$14,629
Pipe Culvert 48"S/CD	LF	$99.78	17,832	$1,779,277		
Performance Turf	SY	$0.75			10088	$7,566
Inlets, DT Bot,Type E,<10	EA	$2,690.73			22	$59,196
Pipe Culvert 24"SD	EA	$52.82			2856	$150,854
Mitered End Section	EA	$952.07			143	$136,146
Concrete Ditch Pavement	SY	$47.20			7133	$336,659
Concrete Class IV Culverts	CY	$594.74			80	$47,282
Reinforced Steel -Roadway	LB	$0.68			9480	$6,446
Concrete Class IV Culverts	CY	$594.74			25	$14,571
Reinforced Steel -Roadway	LB	$0.68			3025	$2,057
Single Sign Post Less 12 SF	AS	$277.85	78	$21,672		
Single Sign Post 12-20 SF	AS	$838.64			78	$65,414
Multi Post Sign 51-100	AS	$5,135.40			14	$71,896
Lighting Conductors, NO. 4-2	LF	$2.29	18,862	$43,193		

Cost Comparison for Alternate 1

SR 87 416748-3 (Rural) *(ALT 1)* **VALUE ENGINEERING IDEA No. 9** **COST COMPARISON SHEET**						
DESCRIPTION	**UNITS**	**UNIT COST**	**Reduced QTY.**	**Reduced COST**	**Added QTY.**	**Added COST**
Lighting Conductors, Underground	LF	$3.78	3,830	$14,478		
Lighting-Conduit, Under Existing Pavement	LF	$12.67	2,457	$31,132		
Light Pole Comp	EA	$8,533.75	75.00	$640,031		
Light Pole COMP WS130, 45'	EA	$3,678.21			75	$275,866
SUBTOTAL				**$7,991,273**		**$1,958,809**
MOBILIZATION (THIS IS SUB+CONTIN. X % =)		**5.0%**		$419,542		$102,837
MOT		**2.0%**		$159,825		$39,176
CONTINGENCIES		**5.0%**		$399,564		$97,940
CEI		**10.0%**		$897,020		$219,876
			-	$0		$0
GRAND TOTAL				**$9,867,224**		**$2,418,640**
POTENTIAL SAVINGS:				**$7,448,584**		

Design Observations

Irrigation

Opportunity to install irrigation system in the original project rather than adding it later.

Muck Areas

Flood plain areas have a potential for muck which needs to be considered in the design.

Right-of-Way Cost

Due to the area being undeveloped for this new alignment, Right-of-Way cost are relatively low; therefore, project design is not limited by Right-of-Way cost.

Bobby Brown Road

Opportunity exist for creating direct connection with US 90 rather than creating a longer route to SR 87 North. The city would have to give up three existing railroad crossing in order to add a new crossing.

If a direct connection is not made between Bobby Brown Road and US 90, a full median opening should be designed at SR 87 north and the new Bobby Brown connection. This will allow traffic on Bobby Brown Road to turn left on SR 87 south.

Summary

Summary of All Ideas

VE IDEA	$ Savings Alternate 1	Days
1. End Multi-Use Path at Heritage Trail, Add 5' Sidewalk	$590,333	94
2. End Multi-Use Path at Heritage Trail, No Sidewalk	$1,125,208	126
3. Reduce Multi-Use Path Width from 12' to 10' Entire Project	$2,083,905	132
4. 10' Path to Heritage Trail, Add 5' Sidewalk	$2,432,822	175
5. 10' Path to Heritage Trail, No Sidewalk	$2,967,697	207
6. Eliminate 5' Sidewalk East Side Entire Project	$6,085,771	203
7. VE 4 + VE 6	$8,518,593	378
8. Eliminate 5' Sidewalk East Side, Except on Bridges	$706,385	37
9. Use Rural Typical in lieu of suburban	$7,448,584	83

Summary of Approved Ideas

VE IDEA	$ Savings Alternate 1
2. End Multi-Use Path at Heritage Trail, No Sidewalk	$759,710
6. Eliminate 5' Sidewalk East Side Entire Project	$5,279,604
9. Use Rural Typical in lieu of Suburban	$7,448,584
Total Savings Approved by Management	$13,487,898

Value Engineering Resolution Meeting Decisions

A Value Engineering Resolution Meeting was held on January 30, 2013 with District Three management. The District Secretary and Directors approved VE 2, VE 6 and VE 9 with slight changes as described below.

VE Idea 2

The twelve foot multi-use path will connect the old SR 1 brick road to the Blackwater Heritage State Trail and will terminate at station 257+00. There will be no multi-use trail from station 257+00 for the remainder of the project. However, management requested a change to VE Idea 2 as proposed to include the additional width necessary to construct a twelve foot mutli-use path on the Clear Creek Bridge. Management also requested the barrier wall to be placed at the outer edge of the bridge. The bridge can be retrofitted with another barrier to separate the multi-use path for the shoulder at a future date in the event the multi-use path is constructed. Changes requested by management reduced the savings for VE Idea 2 from $1,125,208 to $759,710 for a net difference of $365,498.

VE Idea 6

VE Idea 6 eliminates the five foot sidewalk on the east side of the future north bound roadway. This reduces sidewalk, embankment, sod and bridge width. The sidewalk can be built at a later date when the area is developed. Changes requested by management reduced the savings for VE Idea 6 from $6,085,771 to $5,279,604 for a net difference of $806,167. The reduced savings is due to VE Idea 9 already including the savings for removal of the five foot sidewalk for the rural section which is 3.556 miles in length.

VE Idea 9

This idea utilizes a rural typical section in lieu of the suburban section. This idea also includes an open drainage system in lieu of a closed drainage system. In addition, House Bill 599 allowing comingling of water will reduce fill heights significantly from the original design. The total savings for this idea is $7,448,584.

The total savings of all ideas approved by District Three Management is $13,487,898.

Cost Comparison for VE Idea 2 Revised

SR 87 416748-3 Terminate Multi-Use Path at Heritage Trail
(ALT 1) **VALUE ENGINEERING IDEA No. 2**
COST COMPARISON SHEET

DESCRIPTION	UNITS	UNIT COST	Reduced QTY.	Reduced COST	Added QTY.	Added COST
Asphalt Multi Use Path	TN	$104.35	1440	$150,254		$0
Base for Path	SY	$7.60	27635	$210,027		$0
Stabilization for Path	SY	$2.27	34907	$79,238		$0
Embankment	CY	$3.96	36361	$143,990		$0
Sod	SY	$2.33	28907	$67,354		$0
Perf. Turf	SY	$0.75		$0	47451	$35,588
SUBTOTAL				**$650,863**		**$35,588**
MOBILIZATION (THIS IS SUB+CONTIN. X % =)		**5.0%**		$34,170		$1,868
MOT		**2.0%**		$13,017		$712
CONTINGENCIES		**5.0%**		$32,543		$1,779
CEI		**10.0%**		$73,059		$3,995
			-	$0		$0
GRAND TOTAL				**$803,652**		**$43,943**

POTENTIAL SAVINGS: $759,710

Implementation Plan

The Project Manager and Engineer of Record attended the VE Presentation. A copy of the Value Engineering Report will also be sent to the Project Manager and Engineer of Record to document all of the changes approved by District Three Management. The Project Manager will ensure the Value Engineering changes are made.

Summary of changes:

Implement VE 2, VE 6 and VE 9 as detailed in this report including changes by management in the Resolution Meeting as described above.

Design a full median opening at the new intersection of Bobby Brown Road and SR87 north.