US Army Corps of Engineers
New England District
BUILDING STRONG®

Final Environmental Impact Statement/ Final Environmental Impact Report

on the

South Coast Rail Project

proposed by the

Massachusetts Department of Transportation

Department of the Army Permit Application Number NAE–2007–00698
Executive Office of Energy and Environmental Affairs EEA No. 14346

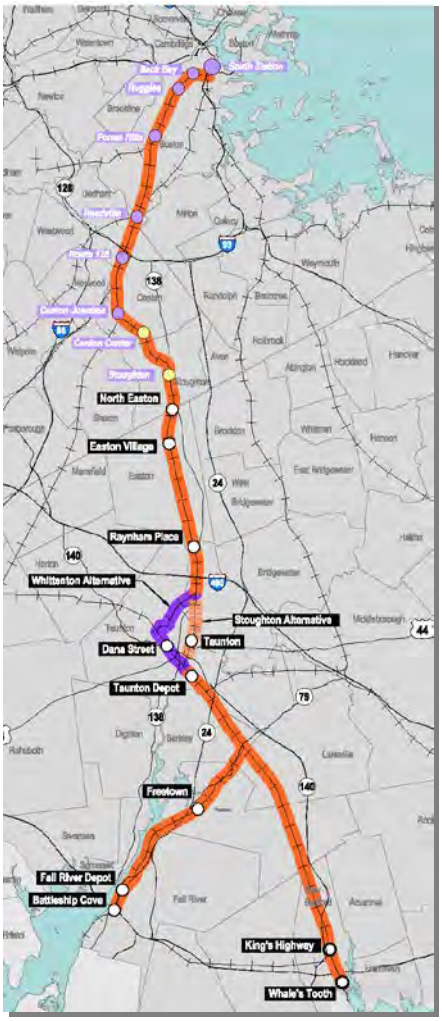

U.S. Army Corps of Engineers
New England District

August 2013

Volume II: FEIS/FEIR Figures

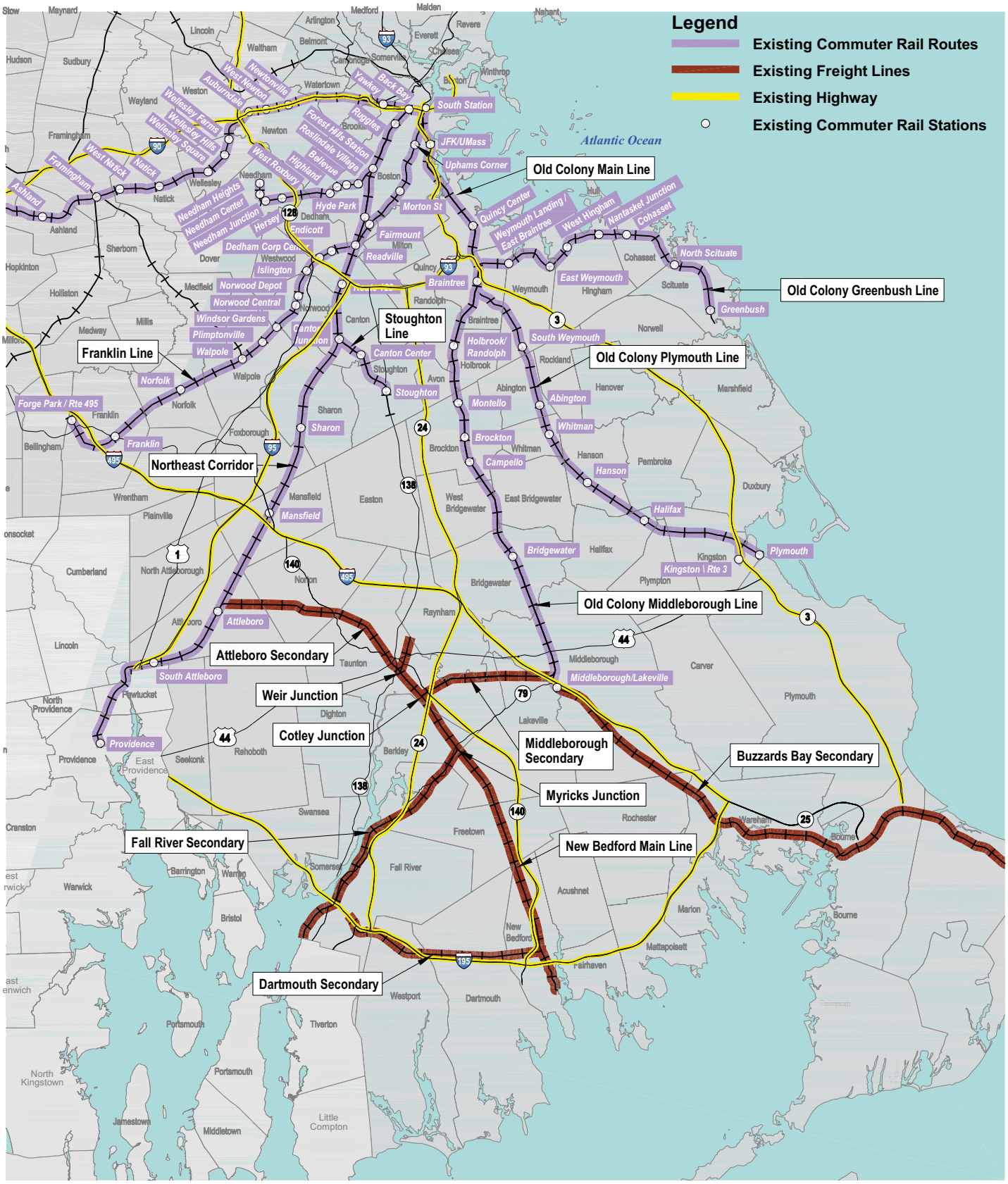

G:\10111.00\graphics\FIGURES\Berger_Use\10111_Existing_Routes.dwg Printing Date: 12/17/2009

0 4 8 Miles

Figure 1.2-1

Existing Regional Transportation System

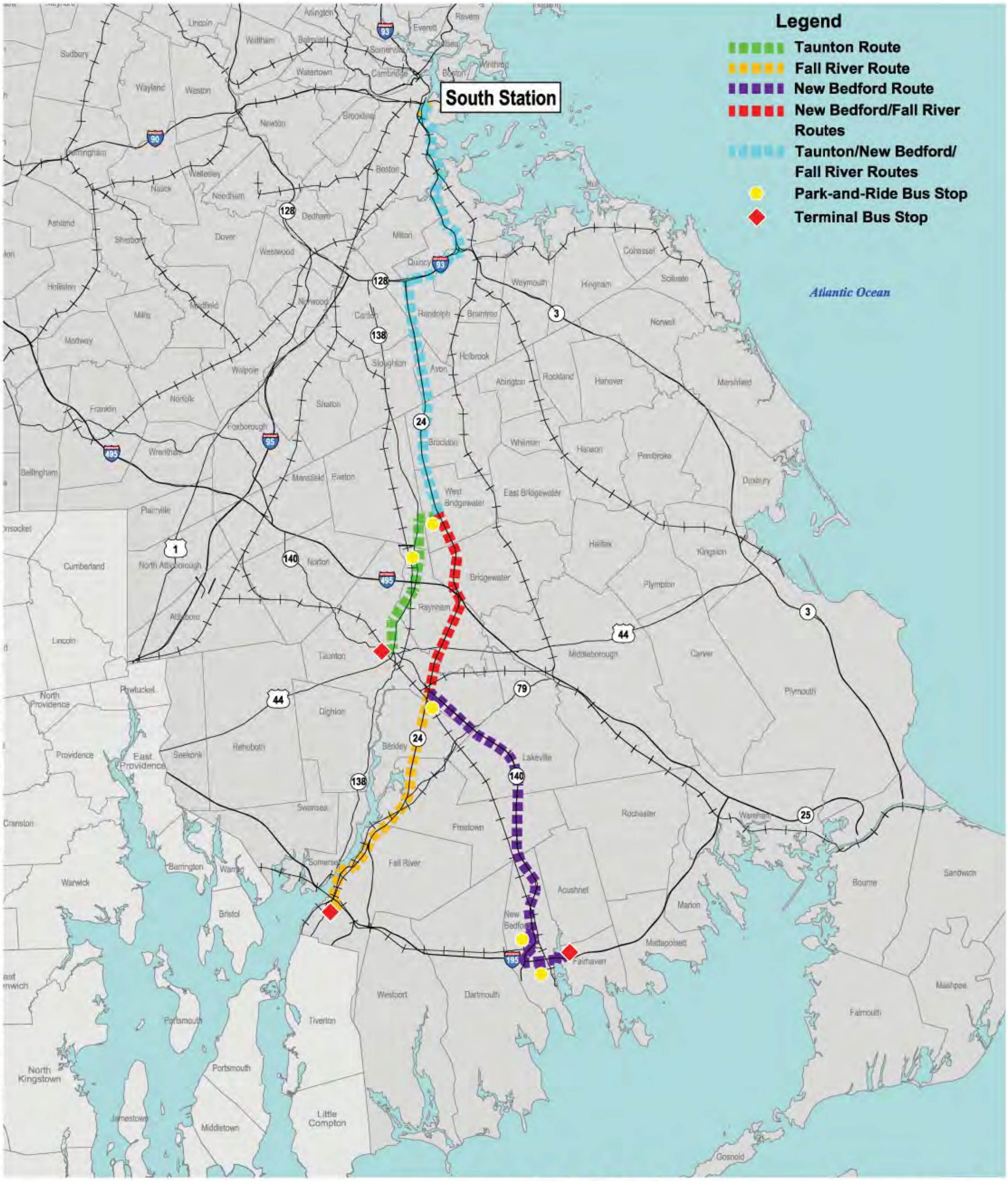

\\MABOSDATA\projects\10111.00\graphics\FIGURES\Alternatives_Description\10111_Figure 2-1.dwg Printing Date: 11/6/2012 11:46 AM

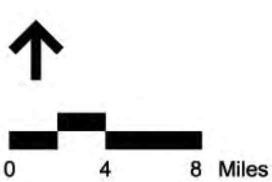

Figure 1.4-1

No-Build Alternative

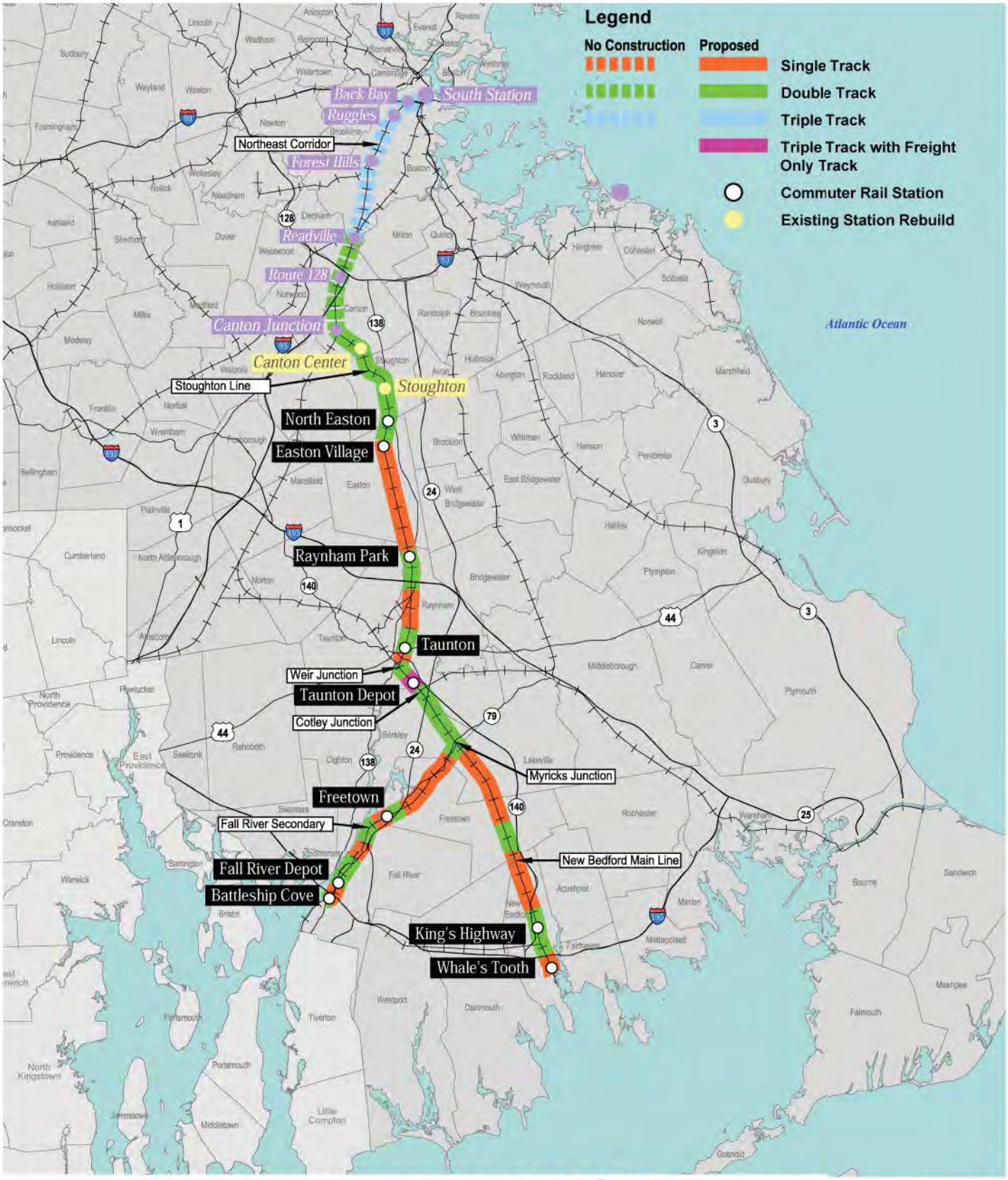

Figure 1.4-2

Stoughton Alternative

0 4 8 Miles

\\mabosdata\projects\10111.00\graphics\FIGURES\Alternatives_Description\10111_Stoughton_Construction_Segments.dwg Printing Date: 11/2/2012 2:34 PM

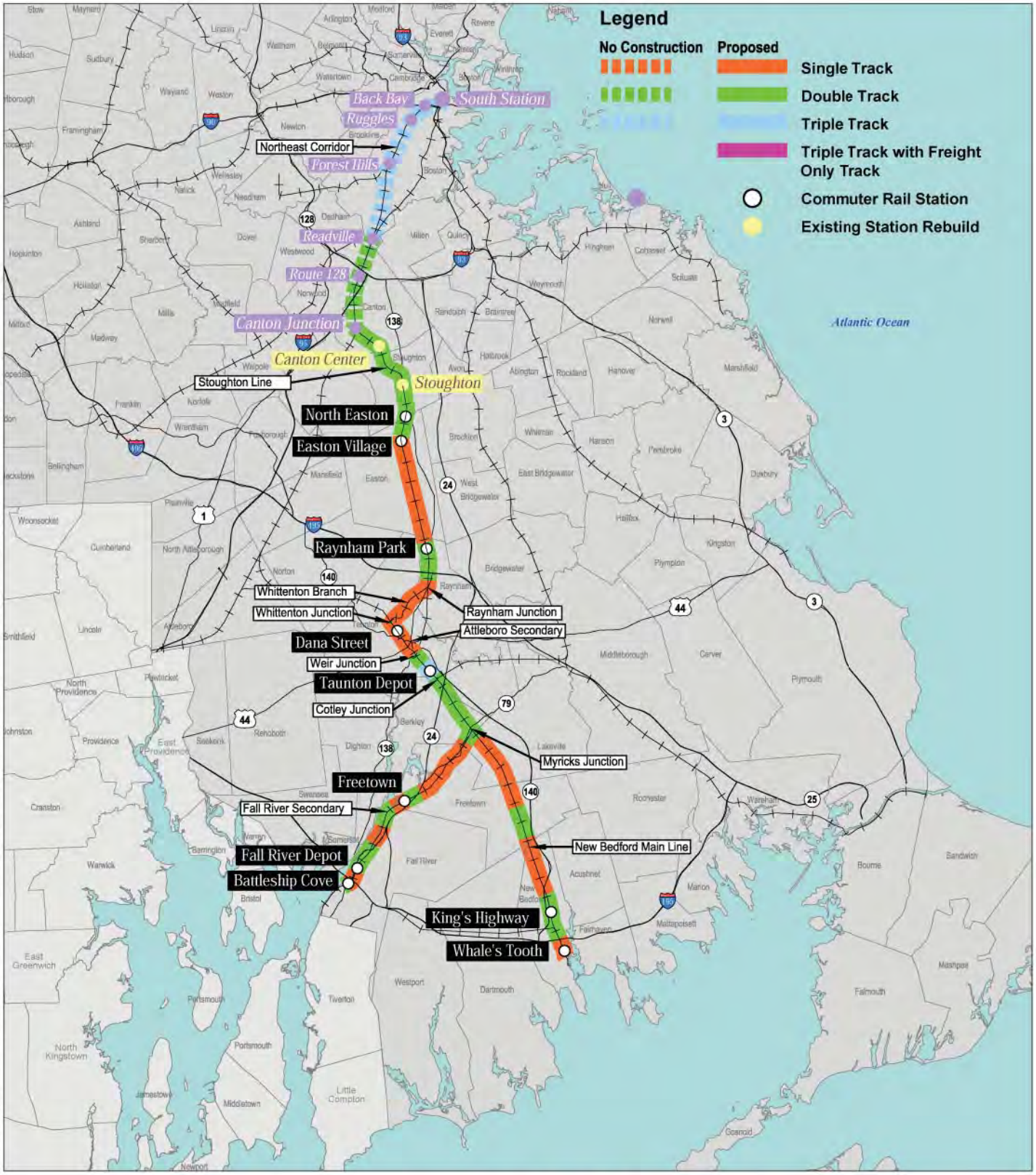

\\mabosdata\projects\10111.00\graphics\FIGURES\Alternatives_Description\10111_Whittenton_Construction_Segments.dwg Printing Date: 11/2/2012 2:33 PM

0 4 8 Miles

Figure 1.4-3

Whittenton Alternative

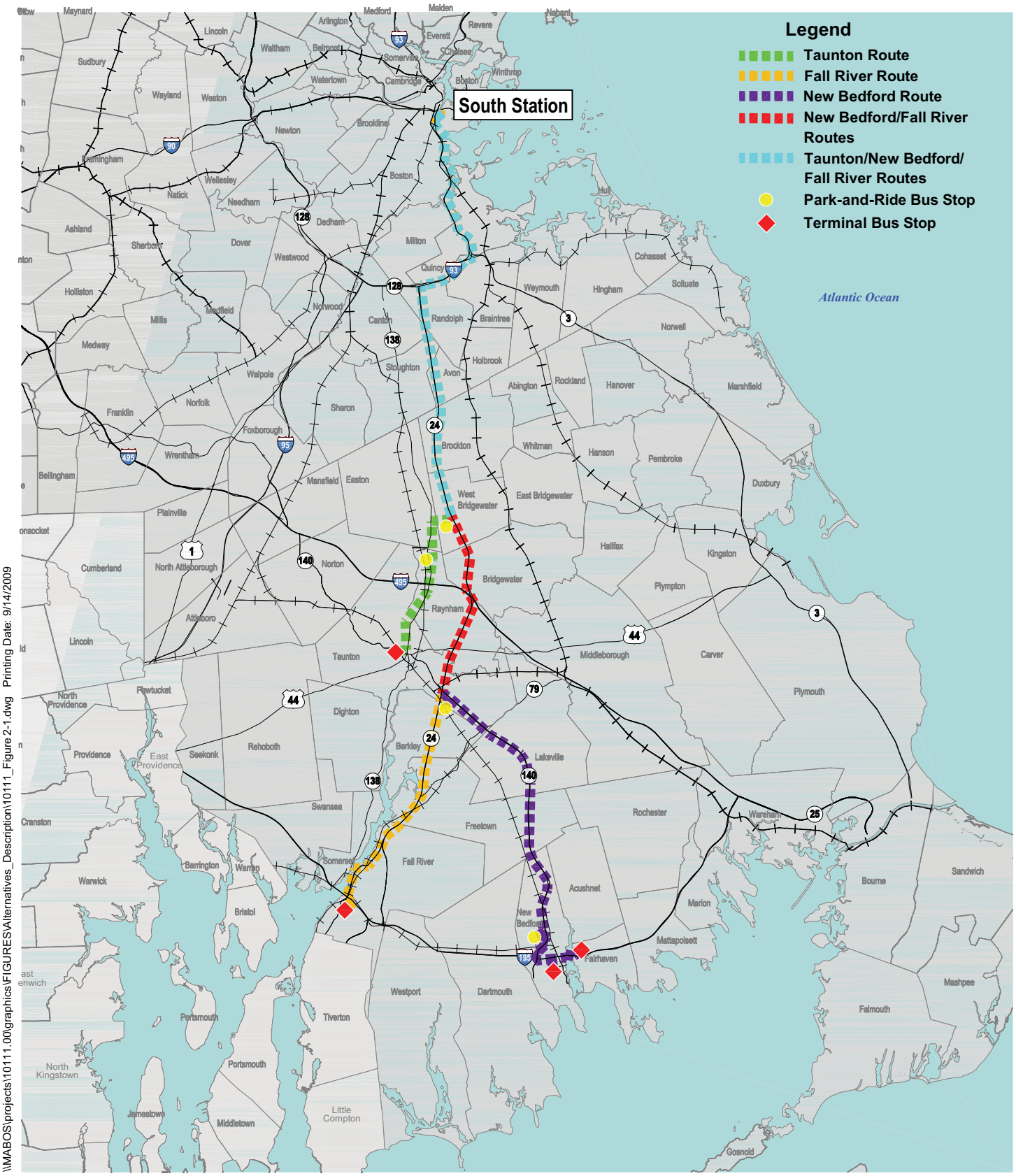

\\MABOS\projects\10111.00\graphics\FIGURES\Alternatives_Description\10111_Figure 2-1.dwg Printing Date: 9/14/2009

0 4 8 Miles

Figure 2.2-1

Existing Regional Bus Routes (Including Existing Park and Ride Locations)

\\Mabos\projects\10111.00\graphics\FIGURES\Alts Analysis Report\Fig03-01.dwg

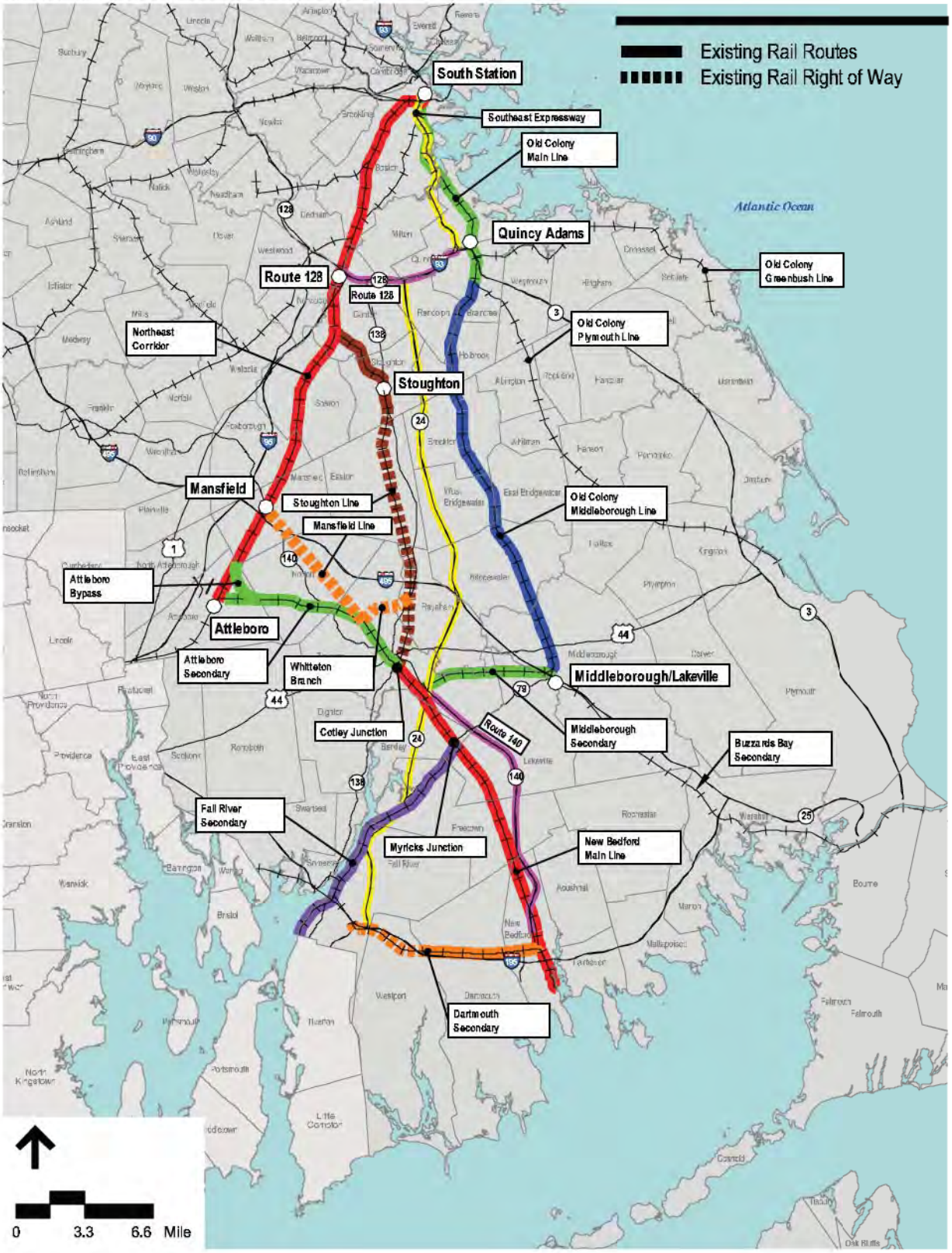

Figure 3.1-1

Corridors Under Consideration

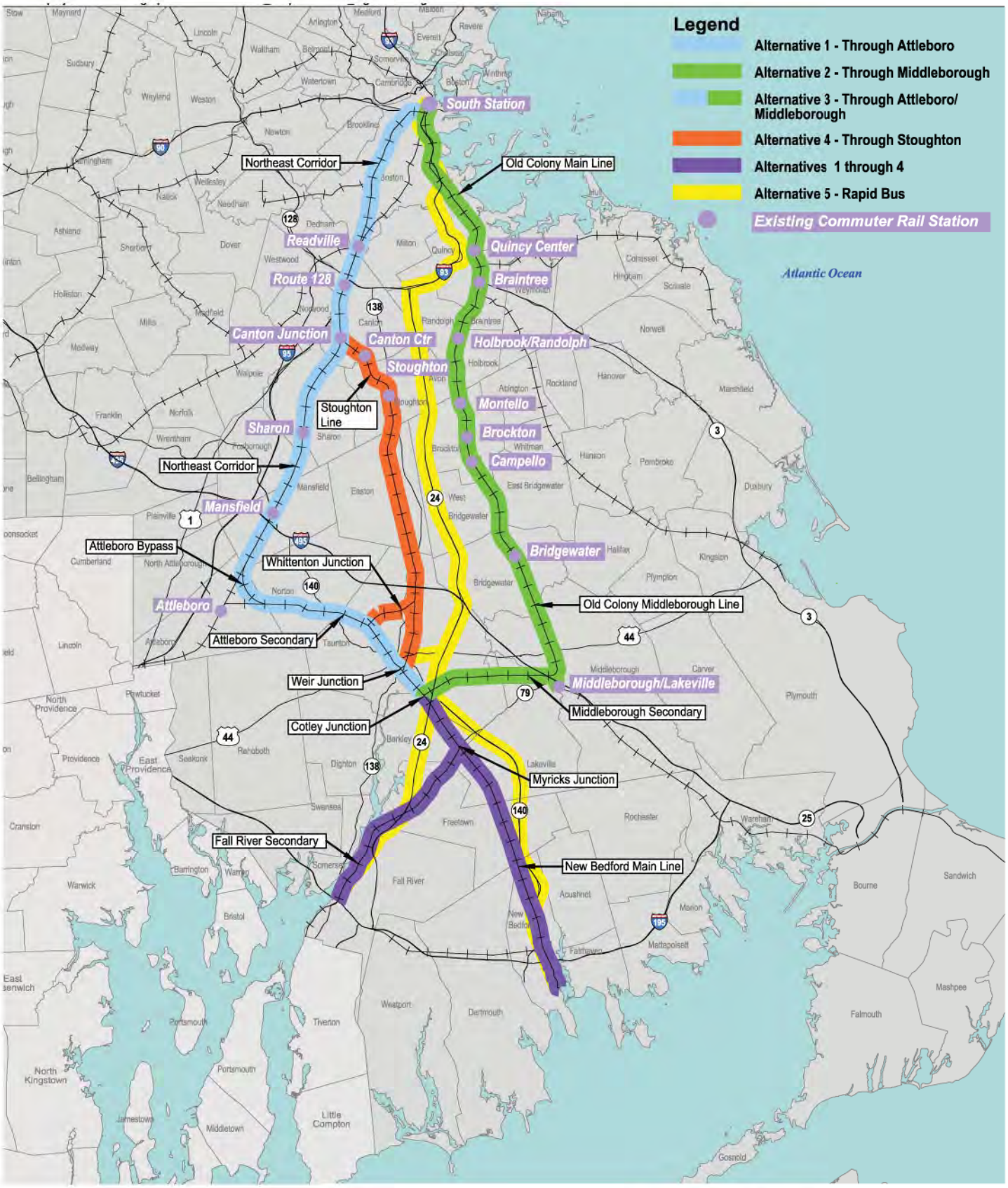

Figure 3.1-2

ENF Alternatives

0 4 8 Miles

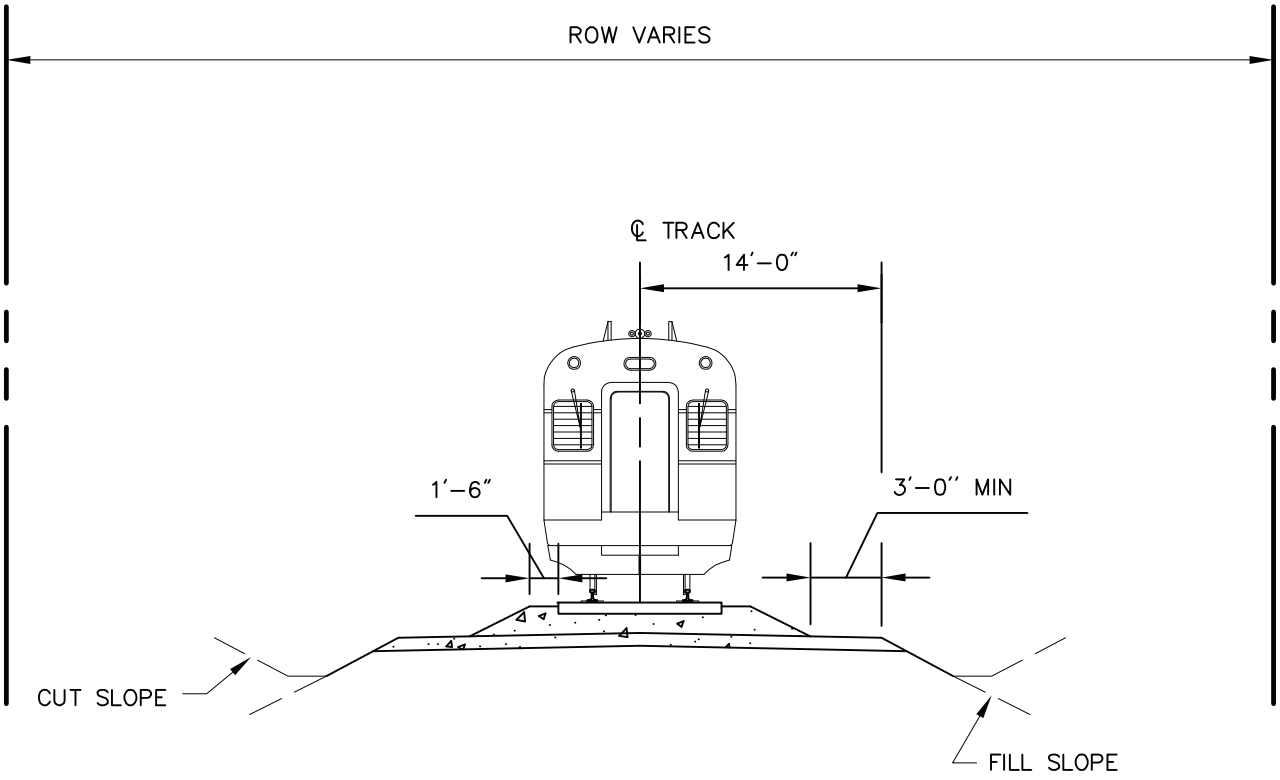

Figure 3.2-1
Conventional Commuter Rail Single Track
Typical Cross Section

Not to Scale

\\Mabos\projects\10111.00\graphics\FIGURES\Alternatives_Description\10111_Figure 4-11 - 4-12_CCRtyp.dwg Printing Date: 9/11/2009

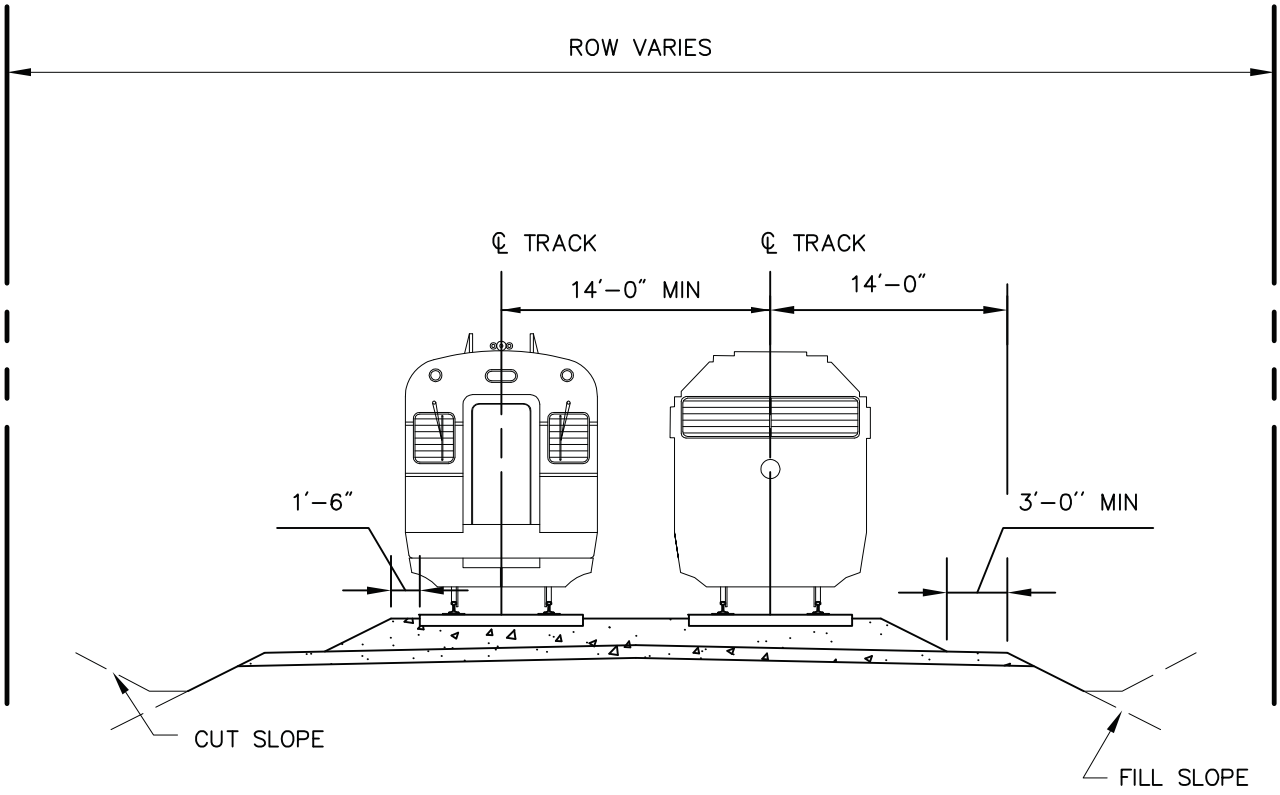

Figure 3.2-2
Conventional Commuter Rail Double Track
Typical Cross Section

Not to Scale

\\Mabos\projects\10111.00\graphics\FIGURES\Alternatives_Description\10111_Figure 4-11 - 4-12_CCRtyp.dwg Printing Date: 9/11/2009

\\MABOSDATA\projects\10111.00\graphics\FIGURES\Alternatives_Description\10111_Figure 4-13 - 4-14, 4-16_ECRtyp.dwg Printing Date: 11/6/2012 10:30 AM

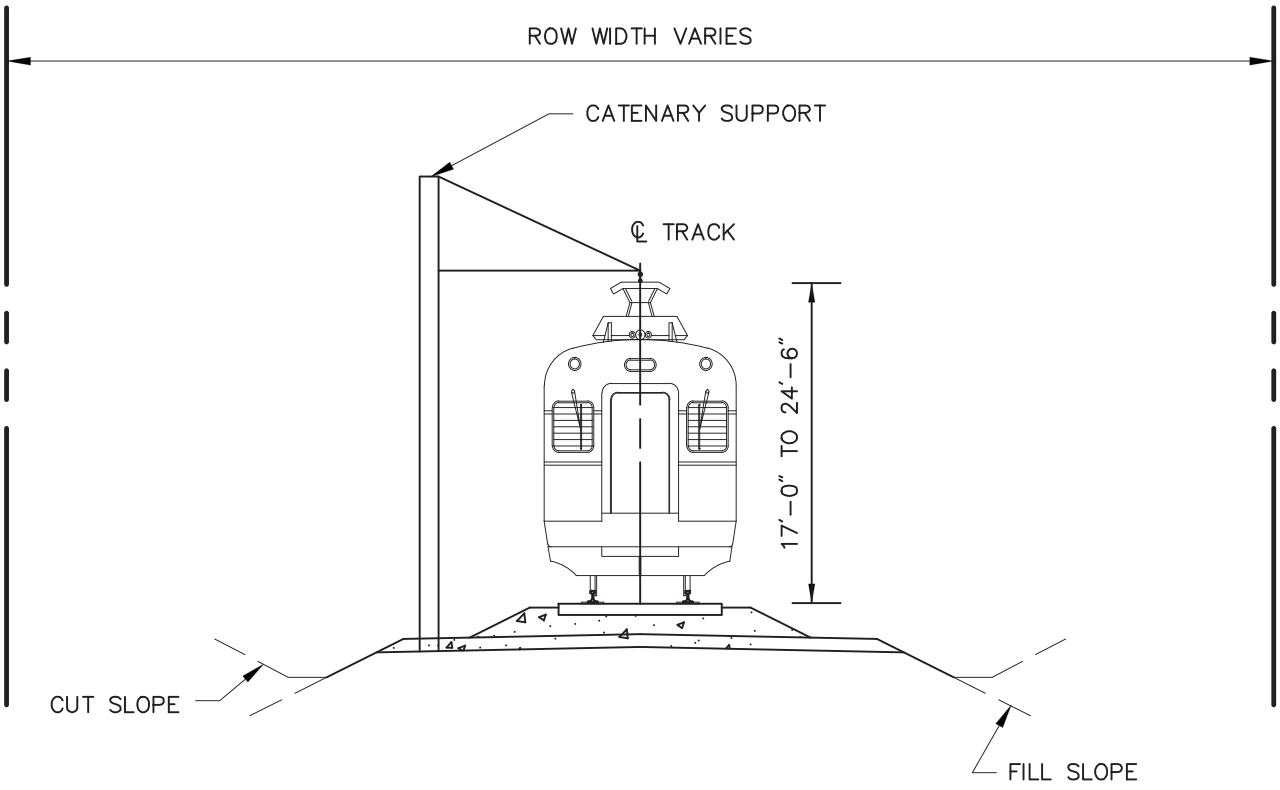

Figure 3.2-3

Electrified Commuter Rail
Single Track
Typical Cross Section

\\MABOSDATA\projects\10111.00\graphics\FIGURES\Alternatives_Description\10111_Figure 4-13 - 4-14, 4-16_ECRtyp.dwg Printing Date: 11/6/2012 10:31 AM

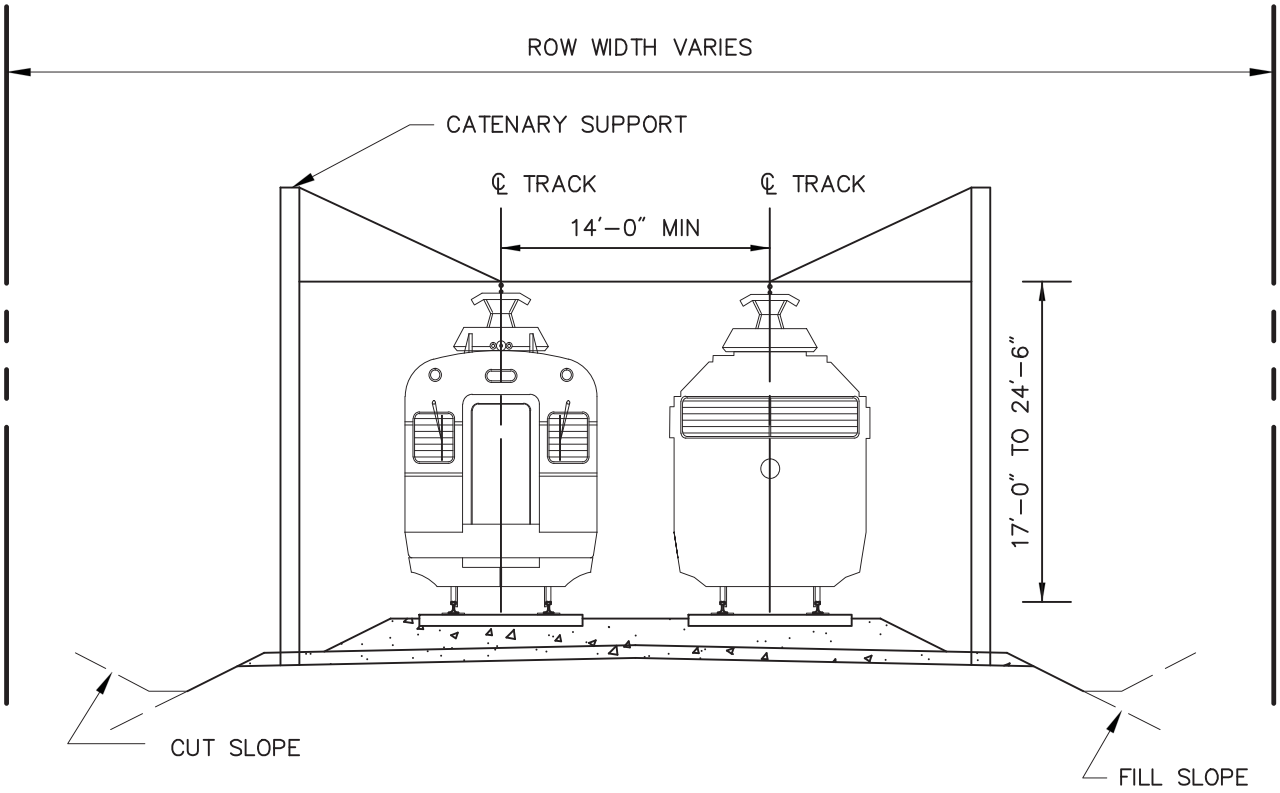

Figure 3.2-4

Electrified Commuter Rail
Double Track
Typical Cross Section

\\MABOSDATA\projects\10111.00\graphics\FIGURES\Alternatives_Description\10111_Figure 4-13 - 4-14, 4-16_ECRtyp.dwg Printing Date: 11/6/2012 10:31 AM

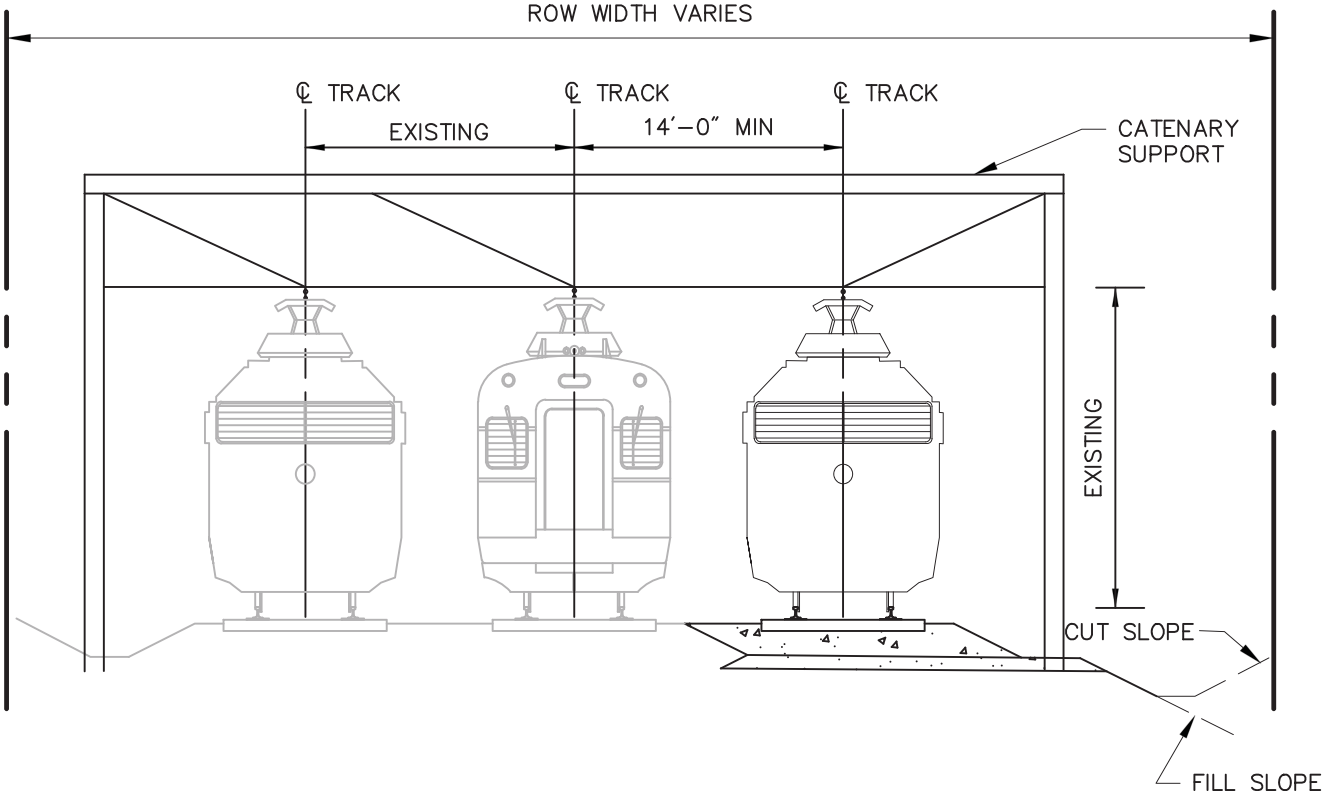

Figure 3.2-5

Electrified Commuter Rail
Triple Track
Typical Cross Section

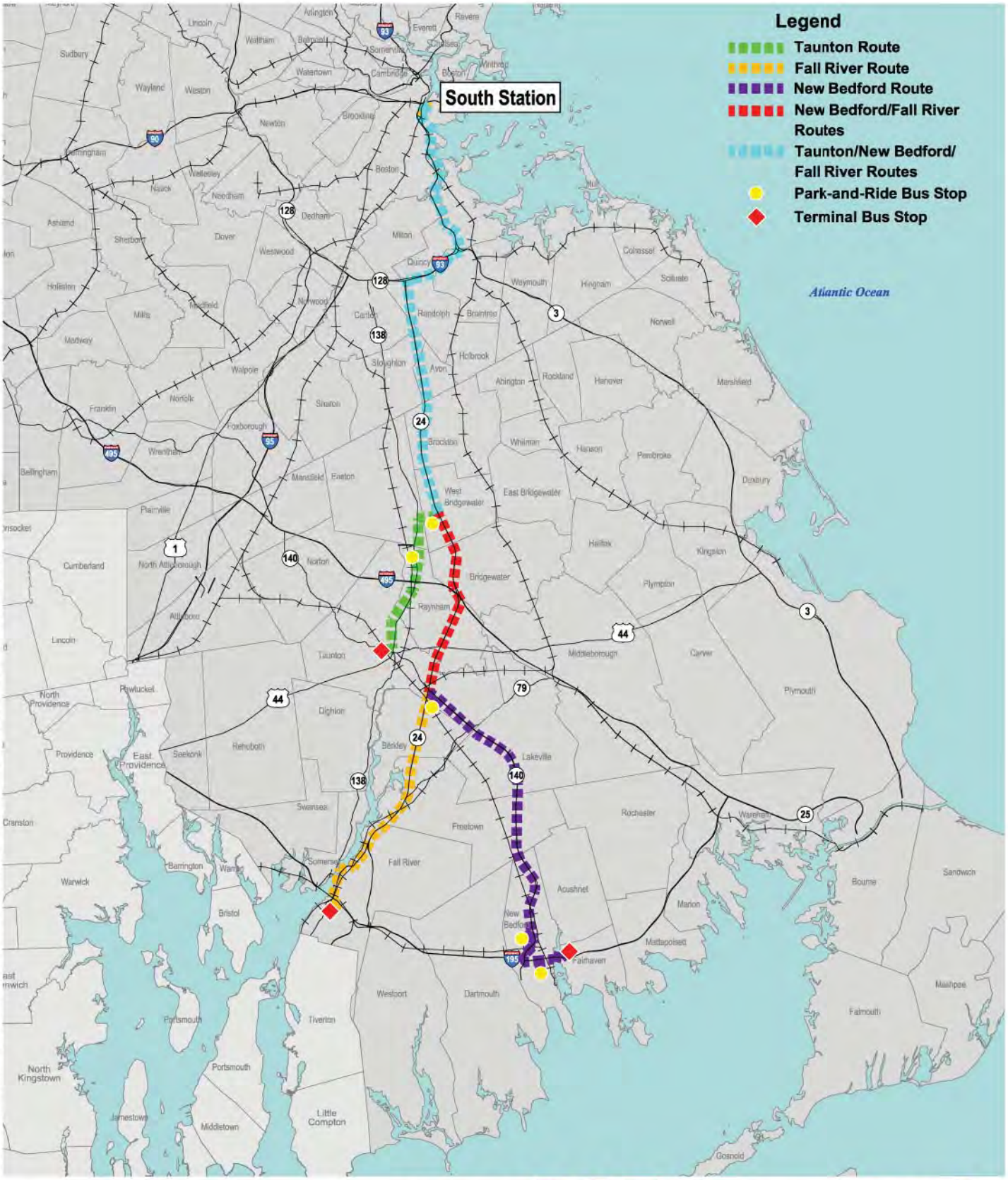

Figure 3.2-6

No-Build Alternative

\\MABOSDATA\projects\10111.00\graphics\FIGURES\Alternatives_Description\10111_Figure 2-1.dwg Printing Date: 11/6/2012 11:46 AM

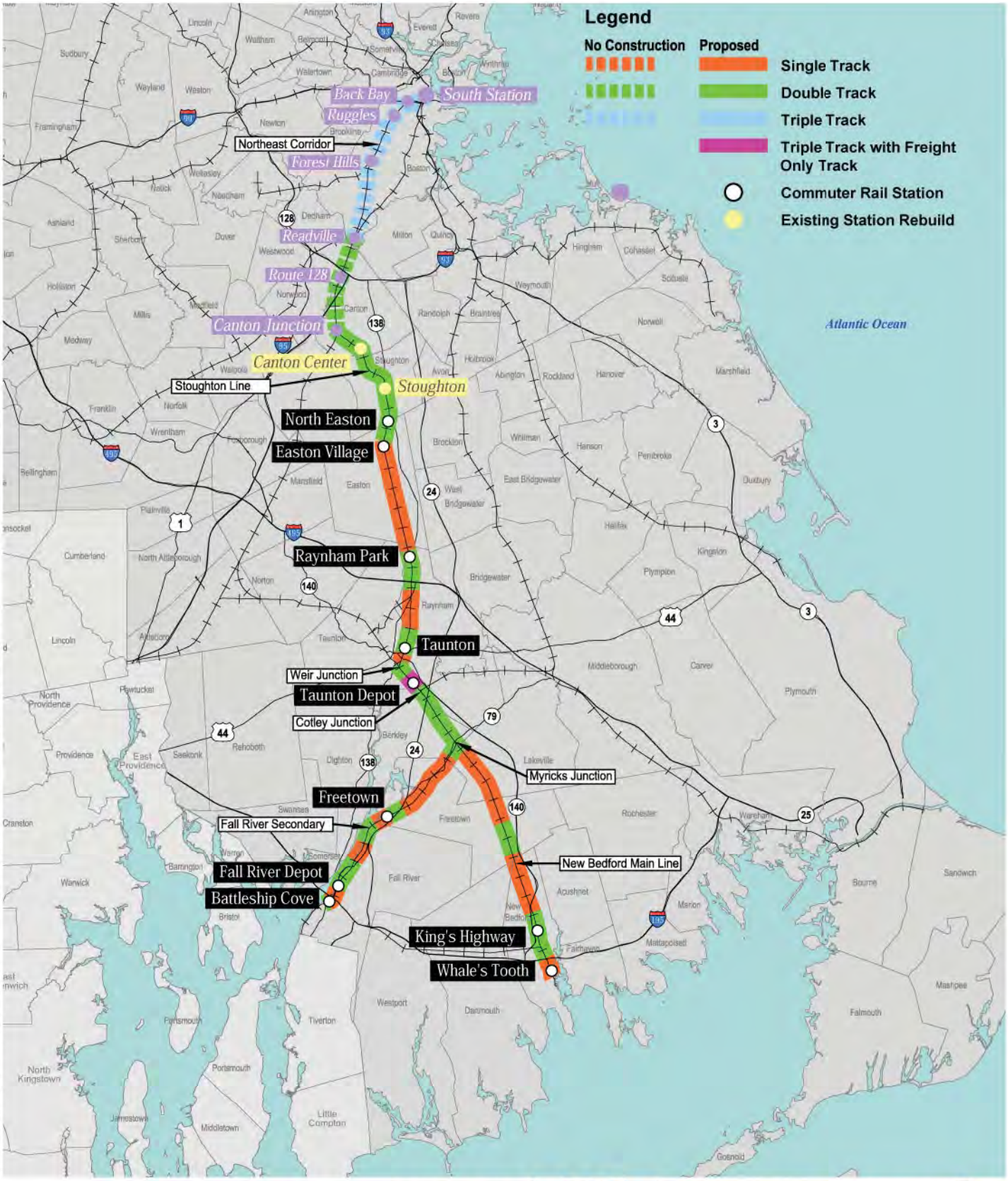

Figure 3.2-7

Stoughton Alternative

0 4 8 Miles

\\mabosdata\projects\10111.00\graphics\FIGURES\Alternatives_Description\10111_Stoughton_Construction_Segments.dwg Printing Date: 11/2/2012 2:34 PM

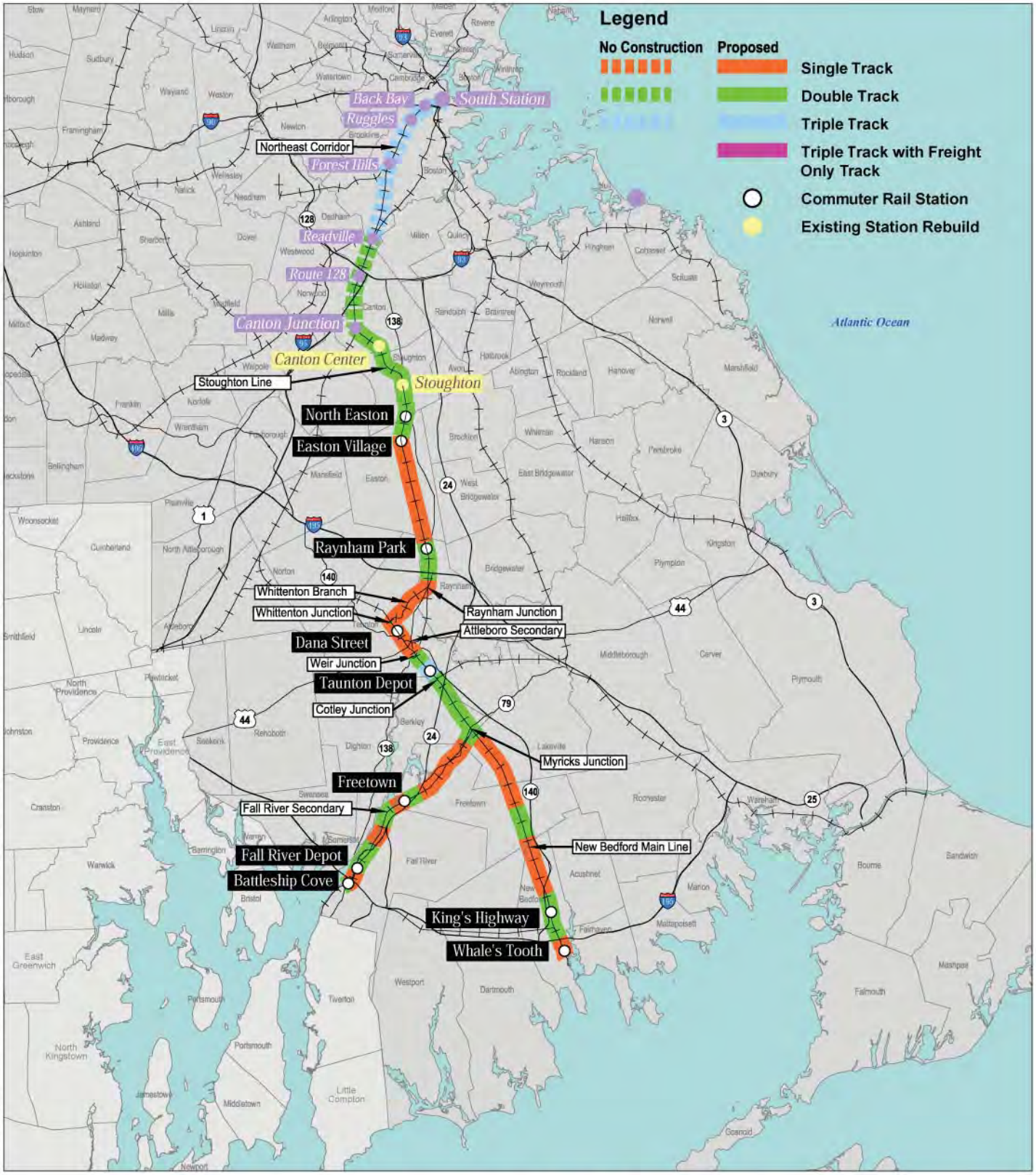

\\mabosdata\projects\10111.00\graphics\FIGURES\Alternatives_Description\10111_Whittenton_Construction_Segments.dwg Printing Date: 11/2/2012 2:33 PM

0 4 8 Miles

Figure 3.2-8

Whittenton Alternative

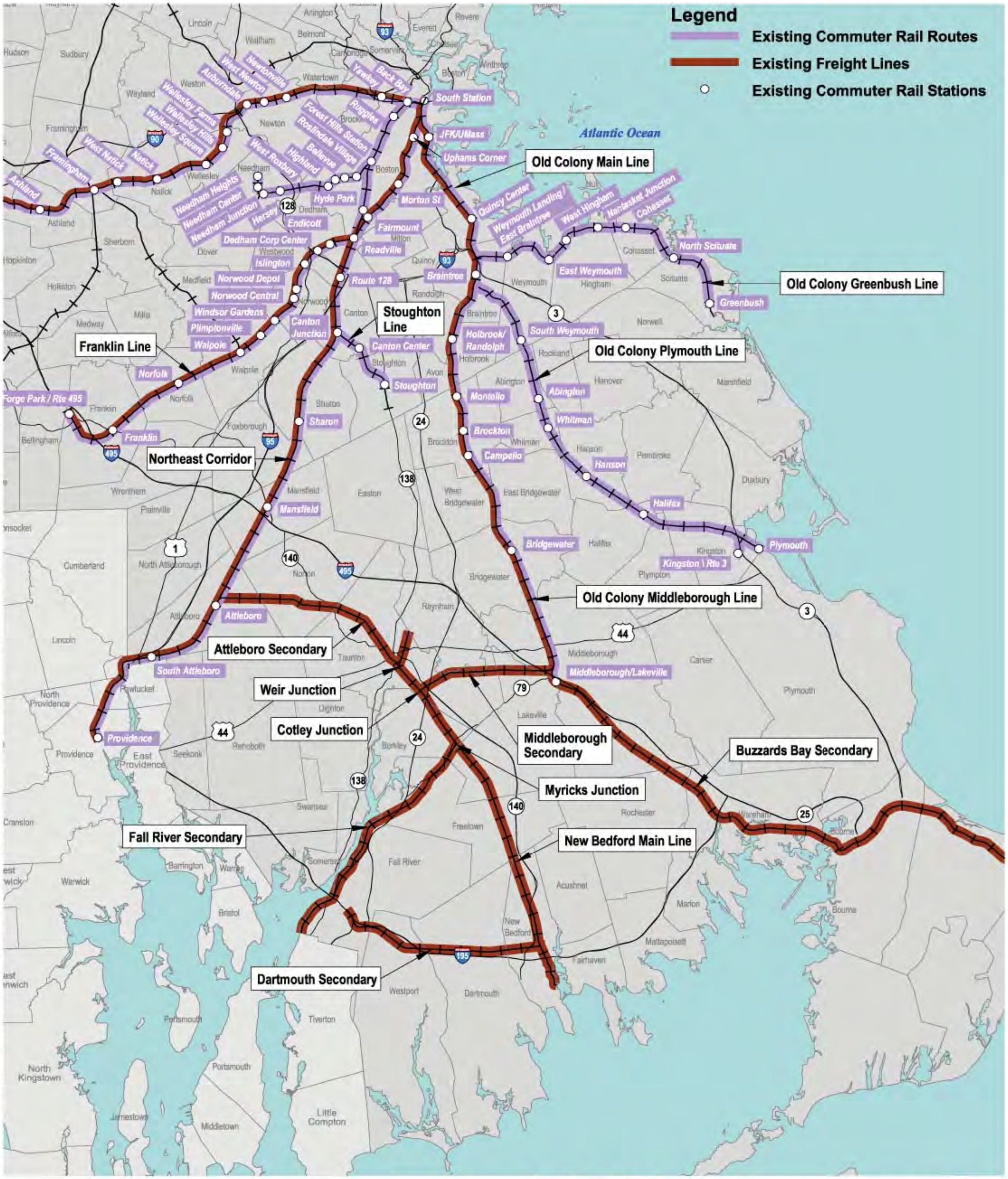

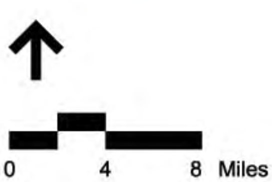

\\MABOSDATA\projects\10111.00\graphics\FIGURES\Alternatives_Description\10111_Figure 2-2_Existing_Rail.dwg Printing Date: 11/6/2012 10:11 AM

Figure 3.2-9

Existing Rail Transportation System

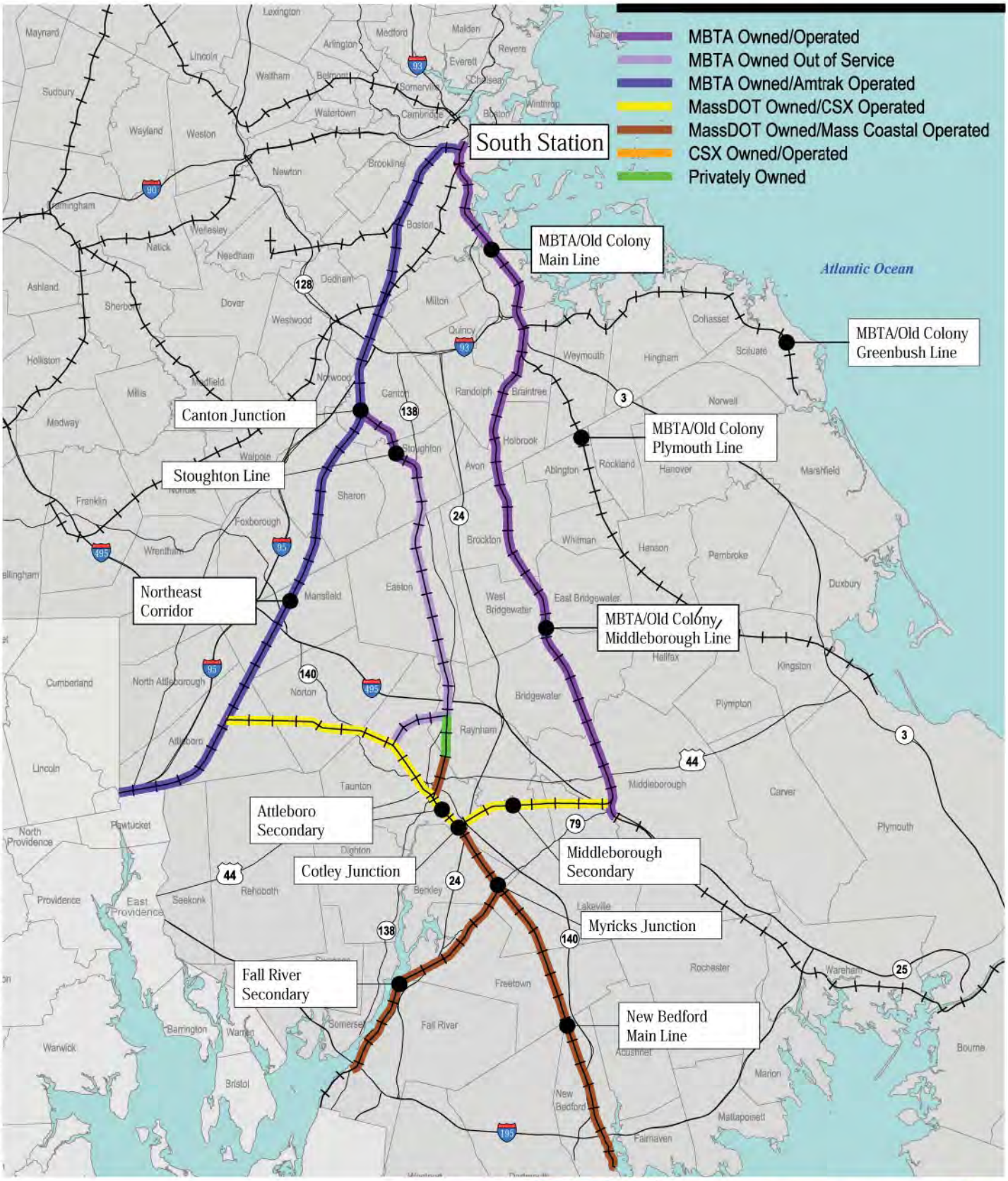

Figure 3.2-10

Ownership of Right-of-Way Segments

0 3.3 6.6 Mile

\\MABOSDATA\projects\10111.00\graphics\FIGURES\Alternatives_Description\10111_Figure 4-15.dwg Printing Date: 11/6/2012 8:41 AM

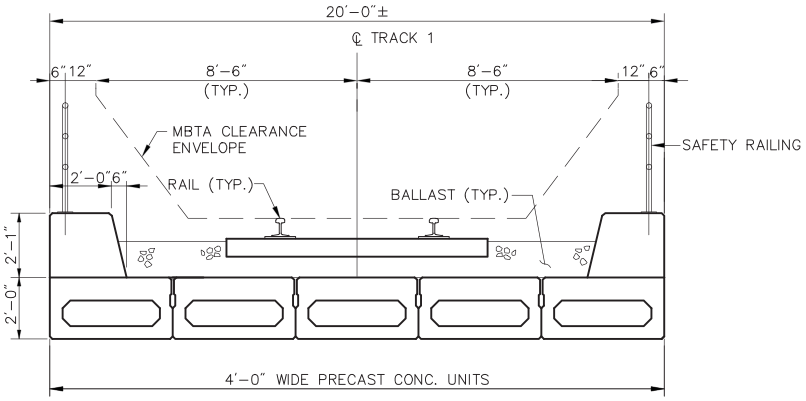

CONCRETE BOX GIRDER CROSS SECTION (ONE TRACK)

SCALE: NTS

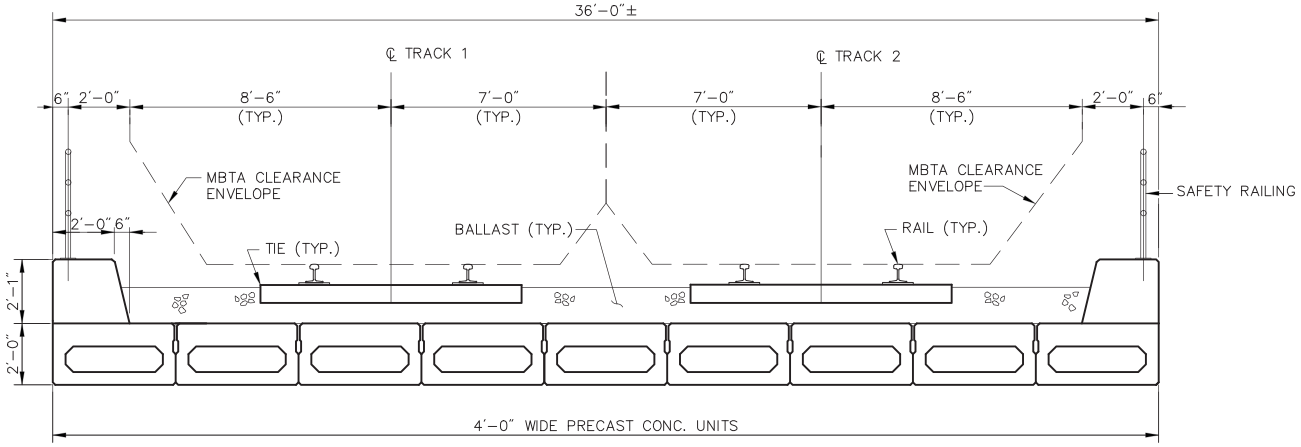

CONCRETE BOX GIRDER CROSS SECTION (TWO TRACKS)

SCALE: NTS

\\mabosdata\projects\10111.00\cad\st\planset\Superstructures.dwg Printing Date: 10/29/2012 8:28 AM

Figure 3.2-11

Typical Cross Section Concrete Girder Bridge

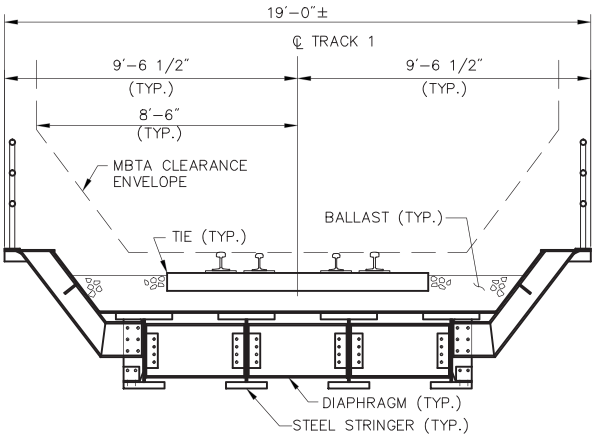

TYPICAL STEEL TUB CROSS SECTION (ONE TRACK)

SCALE: NTS

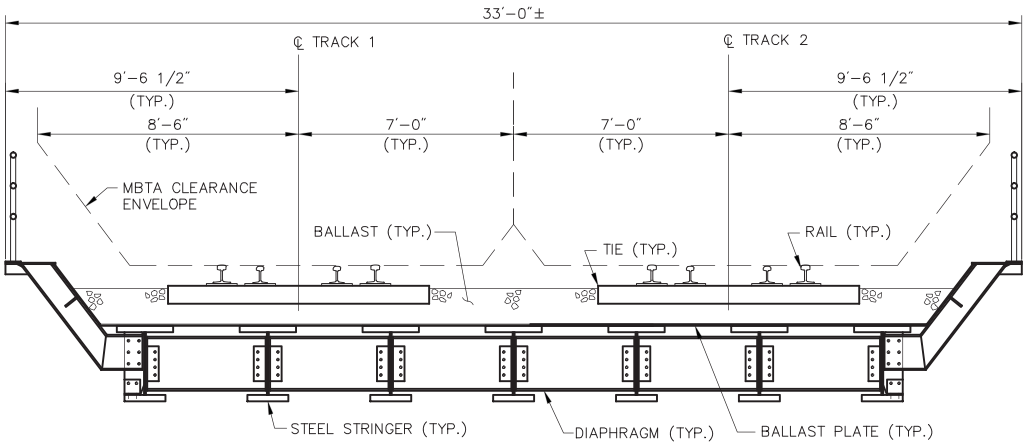

TYPICAL STEEL TUB CROSS SECTION (TWO TRACKS)

SCALE: NTS

\\mabosdata\projects\10111.00\cad\st\planset\Superstructures.dwg Printing Date: 10/29/2012 8:29 AM

Figure 3.2-12
Typical Cross Section Steel Tub Bridge

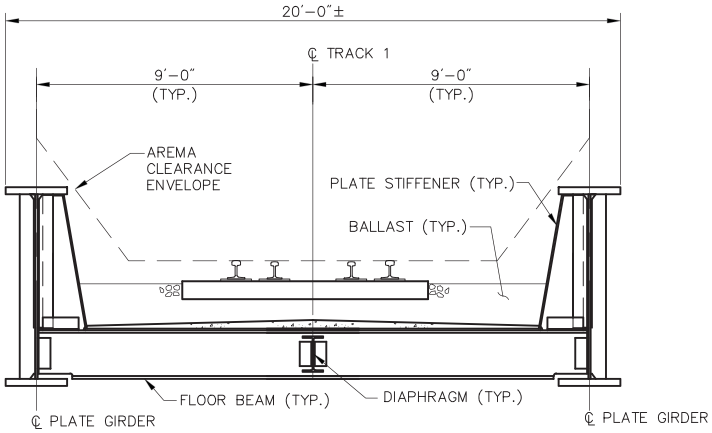

STEEL THRU GIRDER CROSS SECTION (ONE TRACK)

SCALE: NTS

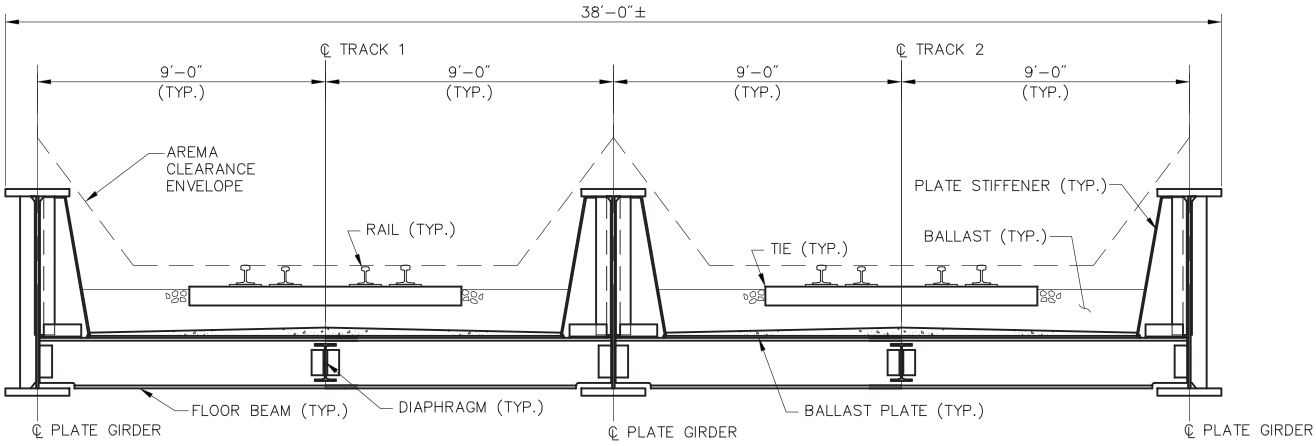

STEEL THRU GIRDER CROSS SECTION (TWO TRACKS)

SCALE: NTS

\\mabosdata\projects\10111.00\cad\st\planset\Superstructures.dwg Printing Date: 10/29/2012 8:29 AM

Figure 3.2-13
Typical Cross Section Steel Thru Girder Bridge

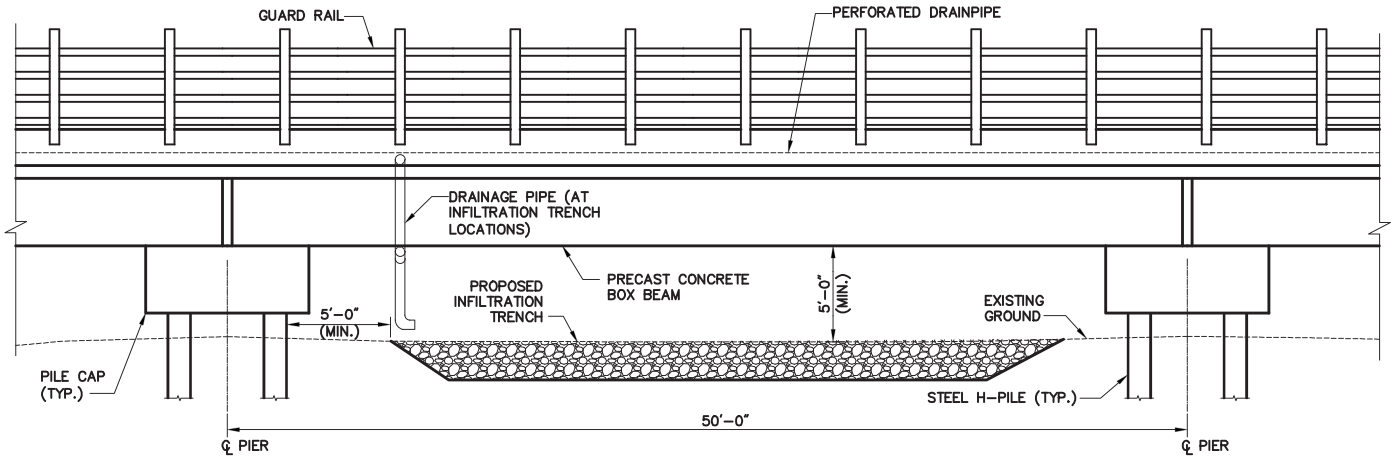

ELEVATION

SCALE: NTS

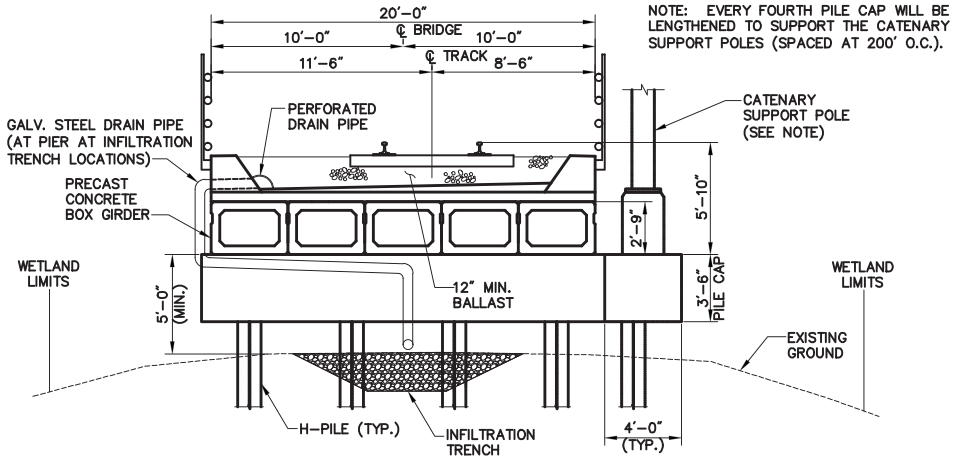

BALLAST DECK

CROSS-SECTION AT PILES

SCALE: NTS

\\MABOSDATA\projects\10111.00\graphics\FIGURES\Alternatives_Description\10111_Figure 4-x_Hock_Alt_Typ_XS.dwg Printing Date: 11/6/2012 10:38 AM

Figure 3.2-14

Trestle Through Hockomock Swamp

ELECTRIC LOCOMOTIVE

DIESEL LOCOMOTIVE

Figure 3.2-15
Locomotive Types

\\Mabos\projects\10111.00\graphics\FIGURES\Alternatives_Description\10111_Figure x-x_Locomotive_Types_OCS.dwg Printing Date: 9/11/2009

Figure 3.2-16

Typical Traction Power Stations

\\MABOSDATA\projects\10111.00\graphics\FIGURES\Alternatives_Description\10111_Figure x-x_TractionPower_OCS.dwg Printing Date: 11/6/2012 11:02 AM

\\MABOSDATA\projects\10111.00\graphics\FIGURES\Alternatives_Description\10111_Figure x-x_TractionPower_OCS.dwg Printing Date: 11/6/2012 11:02 AM

Figure 3.2-17

Typical Overhead Contact Systems

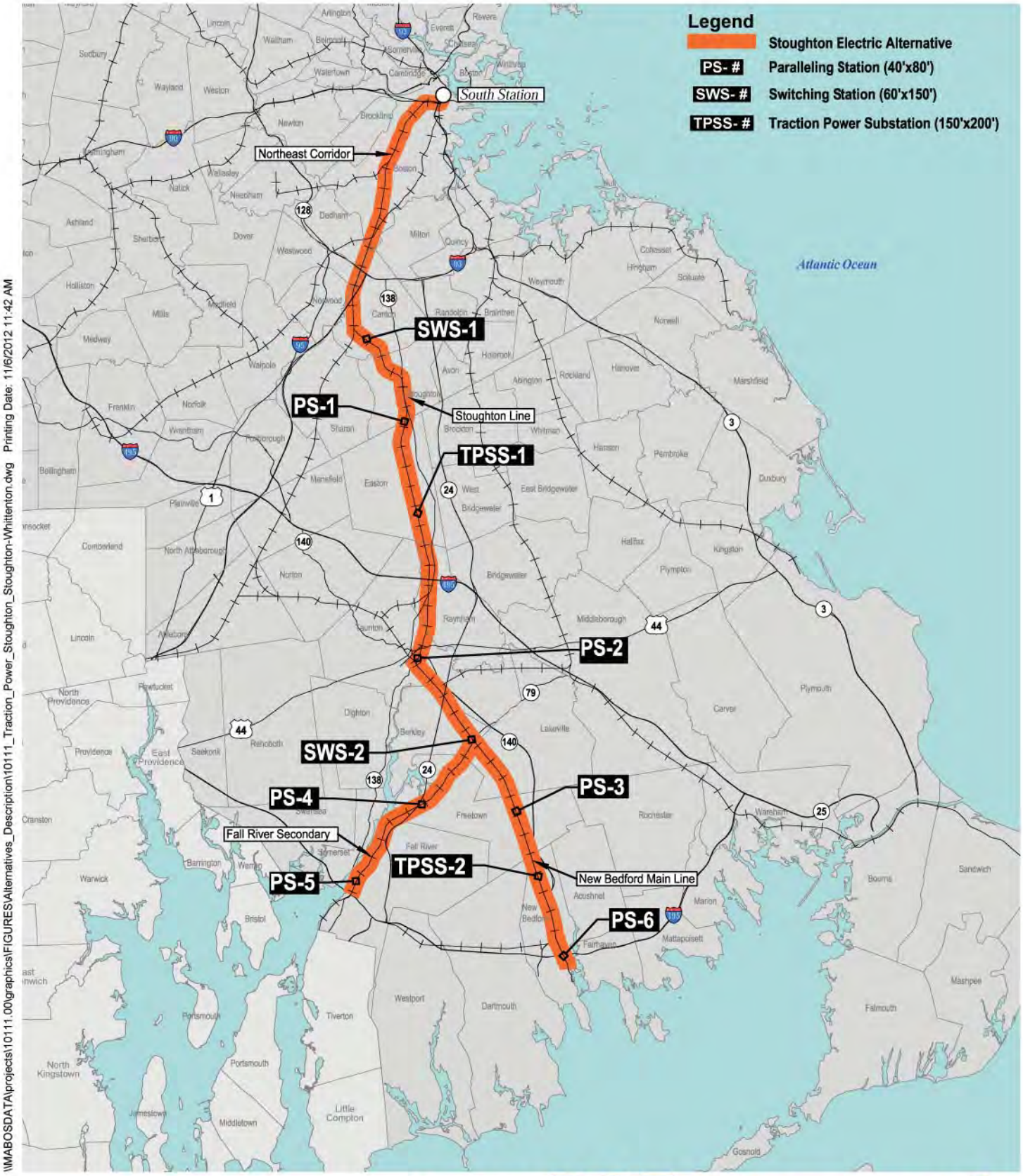

Figure 3.2-18

Stoughton Electric Alternative

Traction Power System

0 4 8 Miles

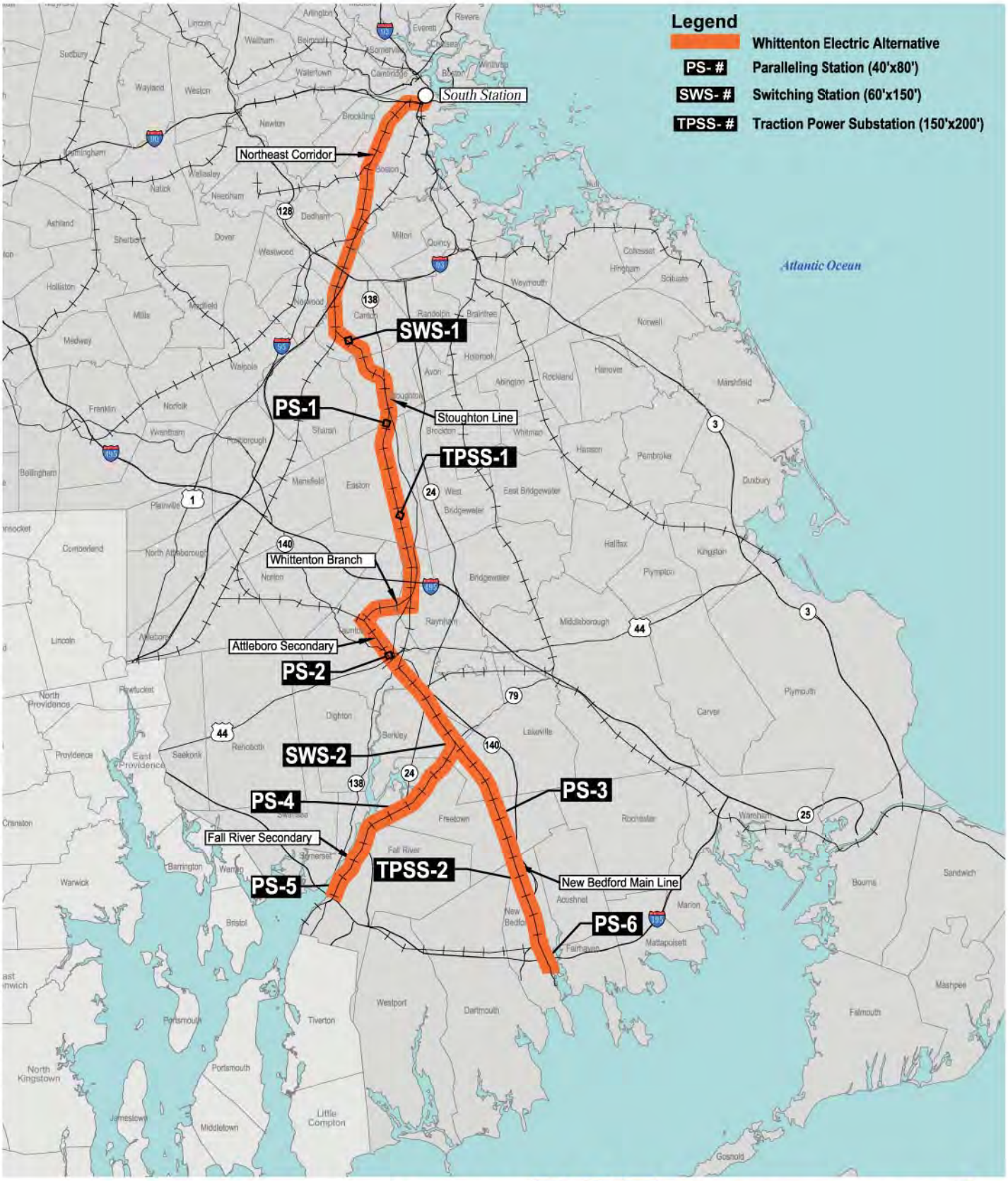

\\MABOSDATA\projects\10111.00\graphics\FIGURES\Alternatives_Description\10111_Traction_Power_Stoughton_Stoughton-Whittenton.dwg Printing Date: 11/6/2012 11:40 AM

Figure 3.2-19

Whittenton Electric Alternative

Traction Power System

0 4 8 Miles

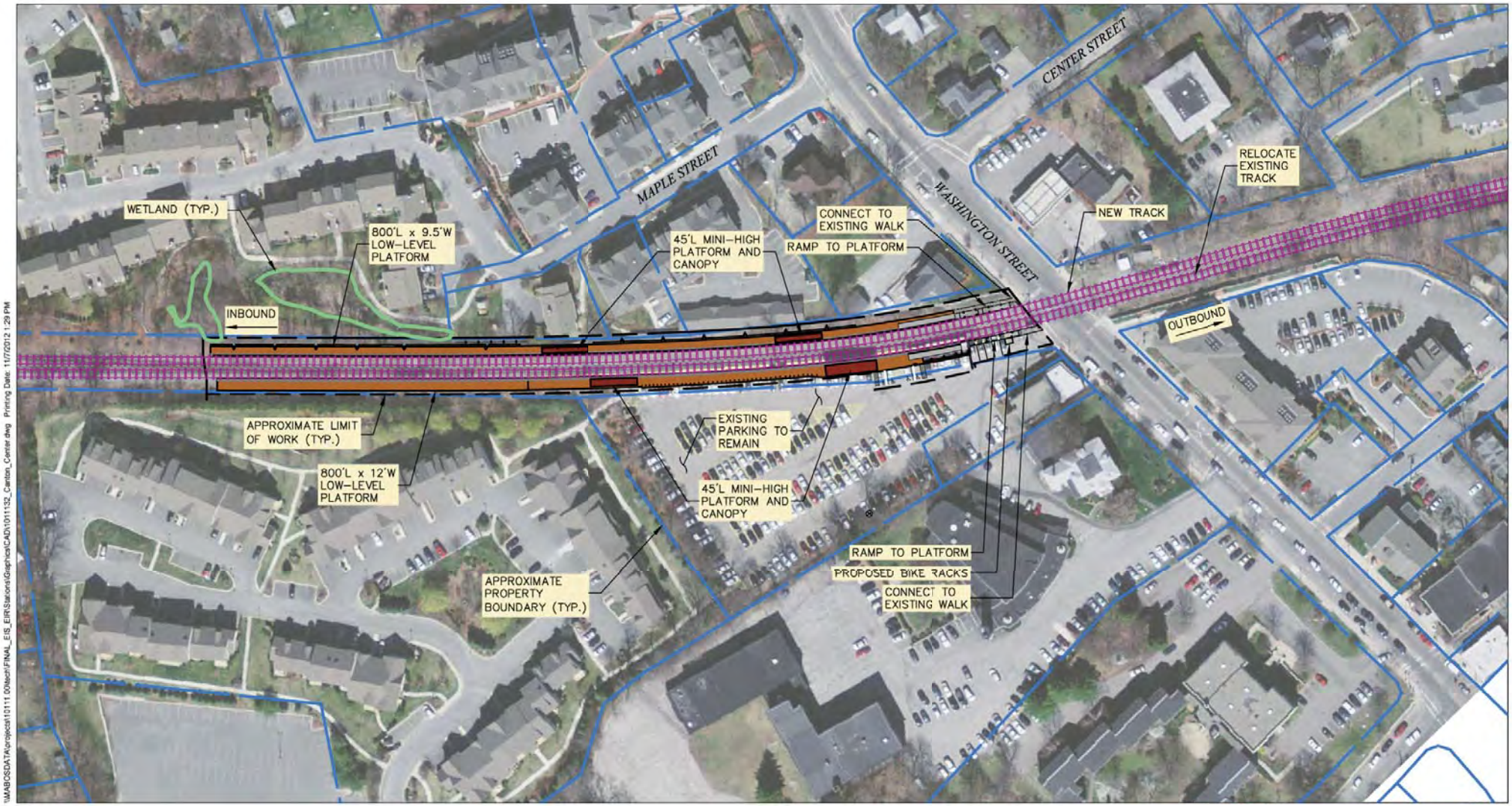

\\MABCSDATA\projects\10111 00\tech\FINAL_EIS_EIR\Stations\Graphics\CAD\10111132_Canton_Center.dwg Printing Date: 11/7/2012 1:29 PM

0 50 100 Feet

Parking Summary Chart

EXISTING SPACES	210
EXISTING SPACES LOST	0
PROPOSED TOTAL SPACES	210

Legend

- *Platform*
- *Canopy*
- *Transitional Plaza*
- *Proposed Track*
- *Retaining Wall*
- *Property*
- *Proposed Roadway*
- *Limit of Work*
- *Wetlands*

Figure 3.2-20

Canton Center Station

Proposed Reconstruction

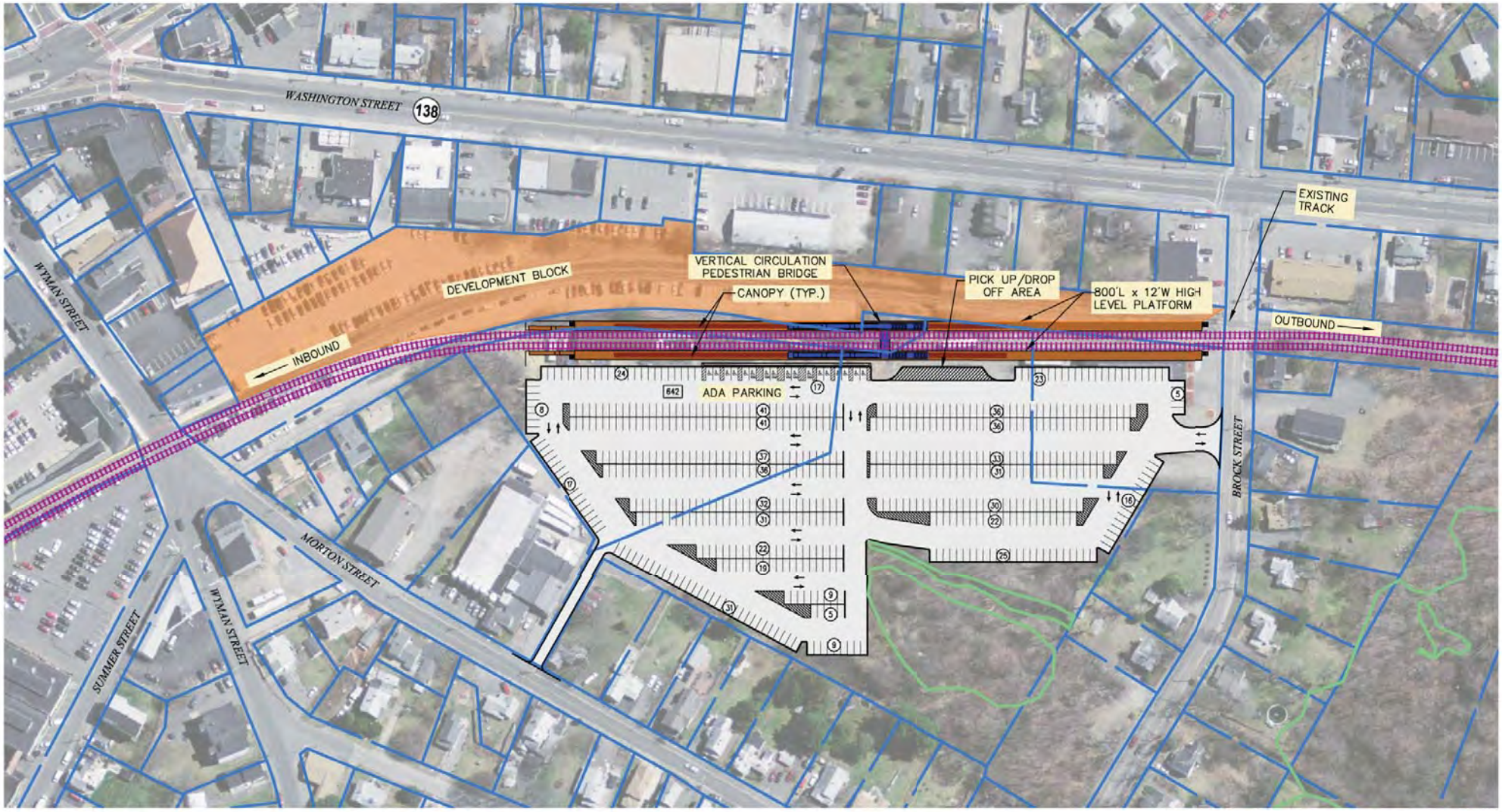

Parking Summary

	EXISTING	PROPOSED
STANDARD SPACES	535	619
ACCESSIBLE SPACES	10	17
TOTAL SPACES	545	636

Legend

- *Platform*
- *Canopy*
- *Transitional Plaza*
- *Proposed Track*
- *Retaining Wall*
- *Property*
- *Proposed Roadway*
- *Limit of Work*
- *Wetlands*
- *Development Block*

0 60 120 Feet

Figure 3.2-21

Stoughton Station
Proposed Reconstruction

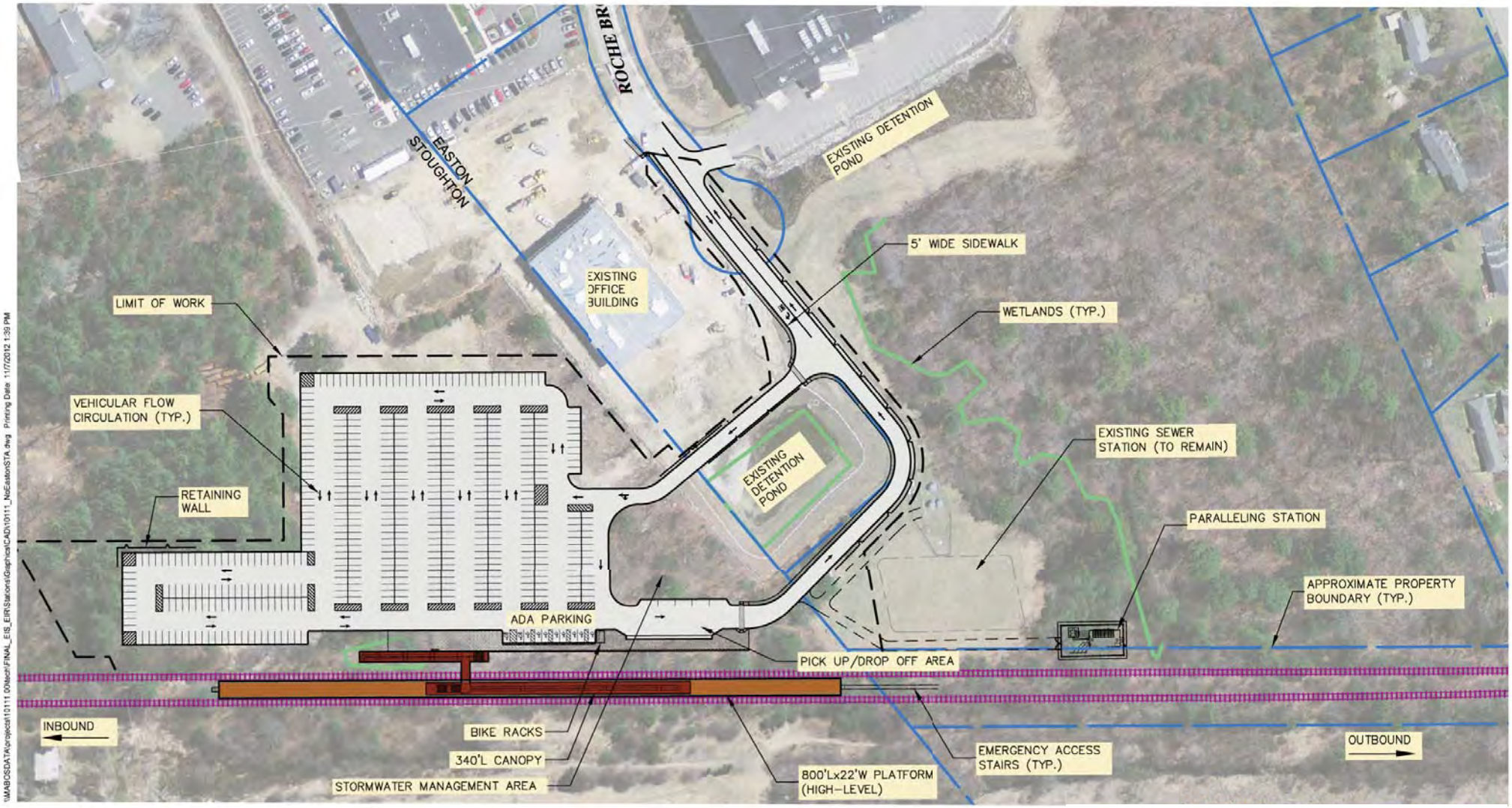

0 60 120 Feet

Parking Summary Chart

STANDARD SPACES	491
ACCESSIBLE SPACES	10
TOTAL SPACES	501

Legend

- *Platform*
- *Canopy*
- *Transitional Plaza*
- *Proposed Track*
- *Retaining Wall*
- *Property*
- *Proposed Roadway*
- *Limit of Work*
- *Wetlands*

Figure 3.2-22

North Easton Station

Conceptual Station Design

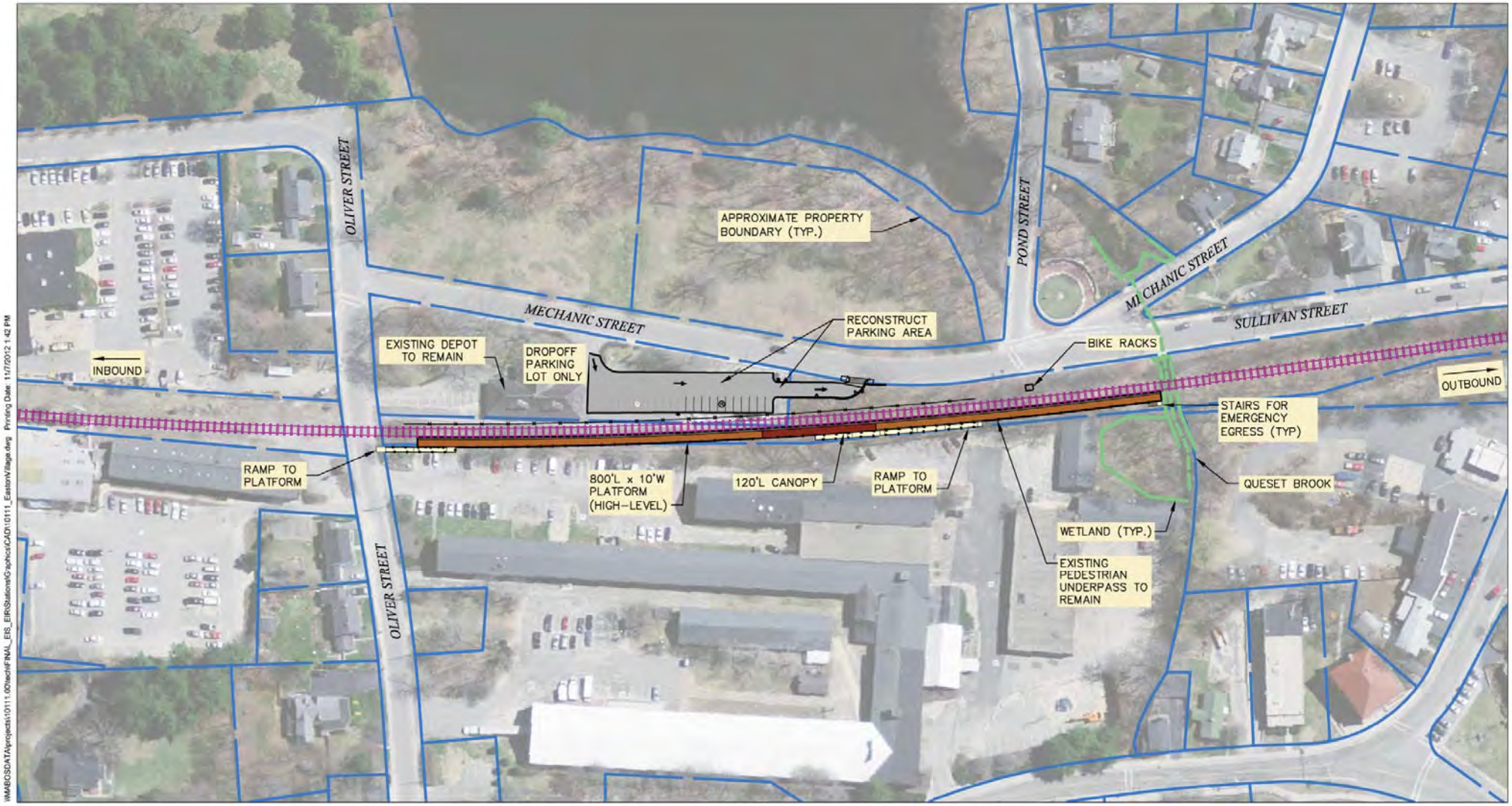

Parking Summary Chart

STANDARD SPACES	0
ACCESSIBLE SPACES	0
TOTAL SPACES	12

Legend

- Platform
- Canopy
- Transitional Plaza
- Proposed Track
- Retaining Wall
- Property
- Proposed Roadway
- Limit of Work
- Wetlands

0 50 100 Feet

Figure 3.2-23

Easton Village Station

Conceptual Station Design

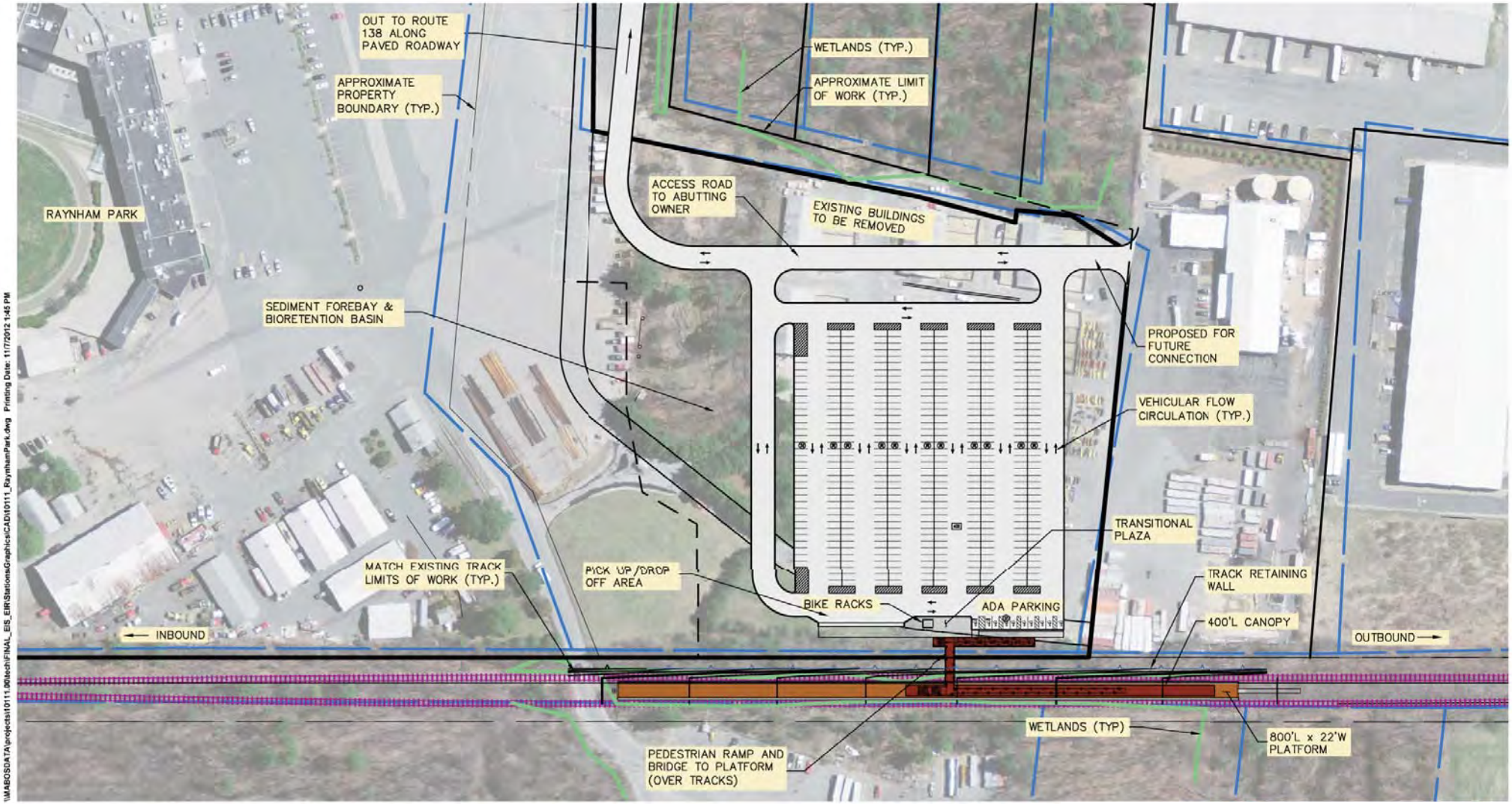

\\MABOSDATA\projects\10111.00\tech\FINAL_EIS_EIR\Stations\Graphics\CAD\10111_RaynhamPark.dwg Printing Date: 11/7/2012 1:45 PM

0 60 120 Feet

Parking Summary Chart

STANDARD SPACES	422
ACCESSIBLE SPACES	10
TOTAL SPACES	432

Legend

- *Platform*
- *Canopy*
- *Transitional Plaza*
- *Proposed Track*
- *Retaining Wall*
- *Property*
- *Proposed Roadway*
- *Limit of Work*
- *Wetlands*

Figure 3.2-24

Raynham Park Station

Conceptual Station Design

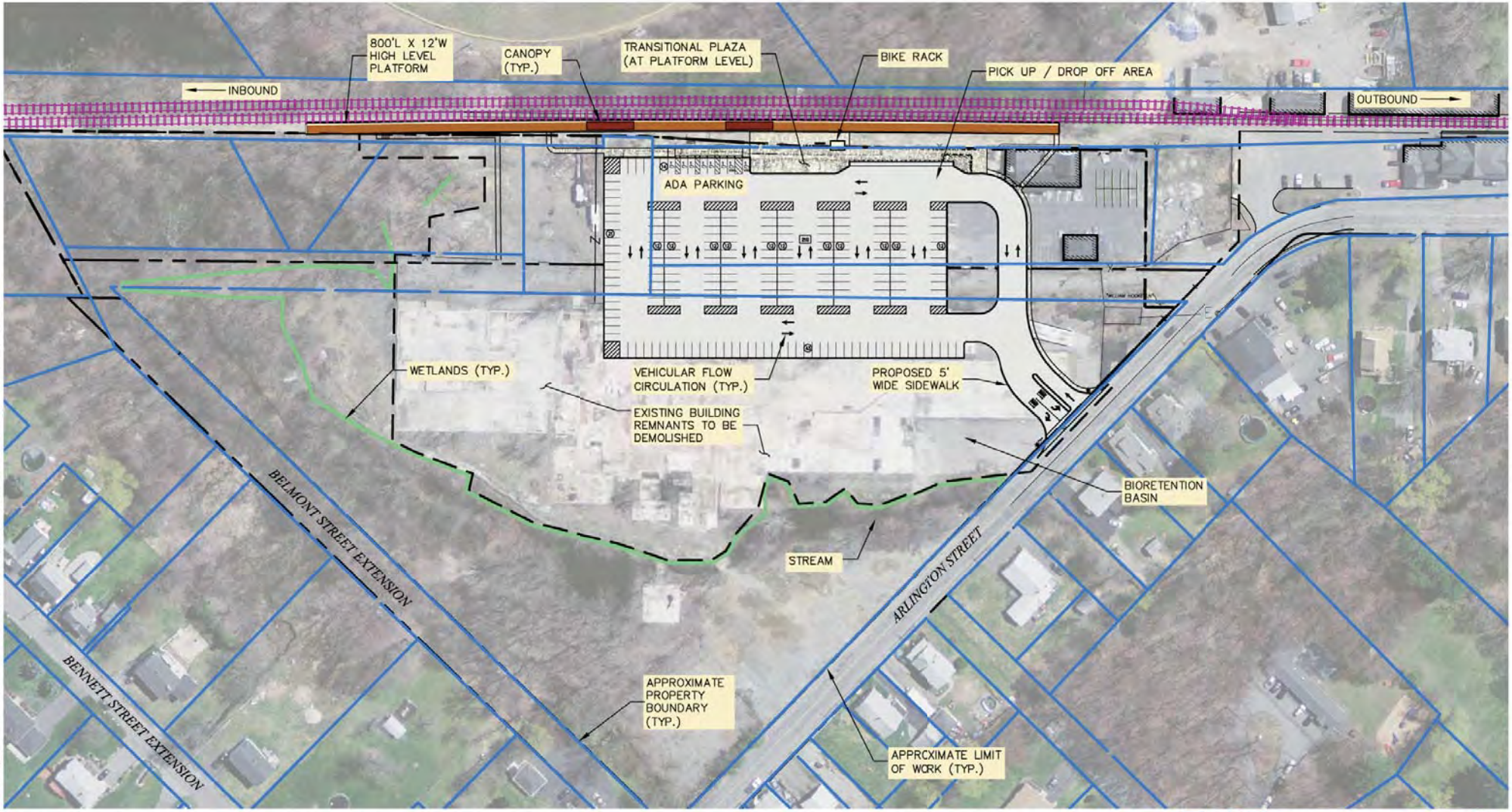

Parking Summary Chart

STANDARD SPACES	202
ACCESSIBLE SPACES	8
TOTAL SPACES	210

0 50 100 Feet

Legend

- Platform
- Canopy
- Transitional Plaza
- Proposed Track
- Retaining Wall
- Property
- Proposed Roadway
- Limit of Work
- Wetlands

Figure 3.2-25

Taunton Station

Conceptual Station Design

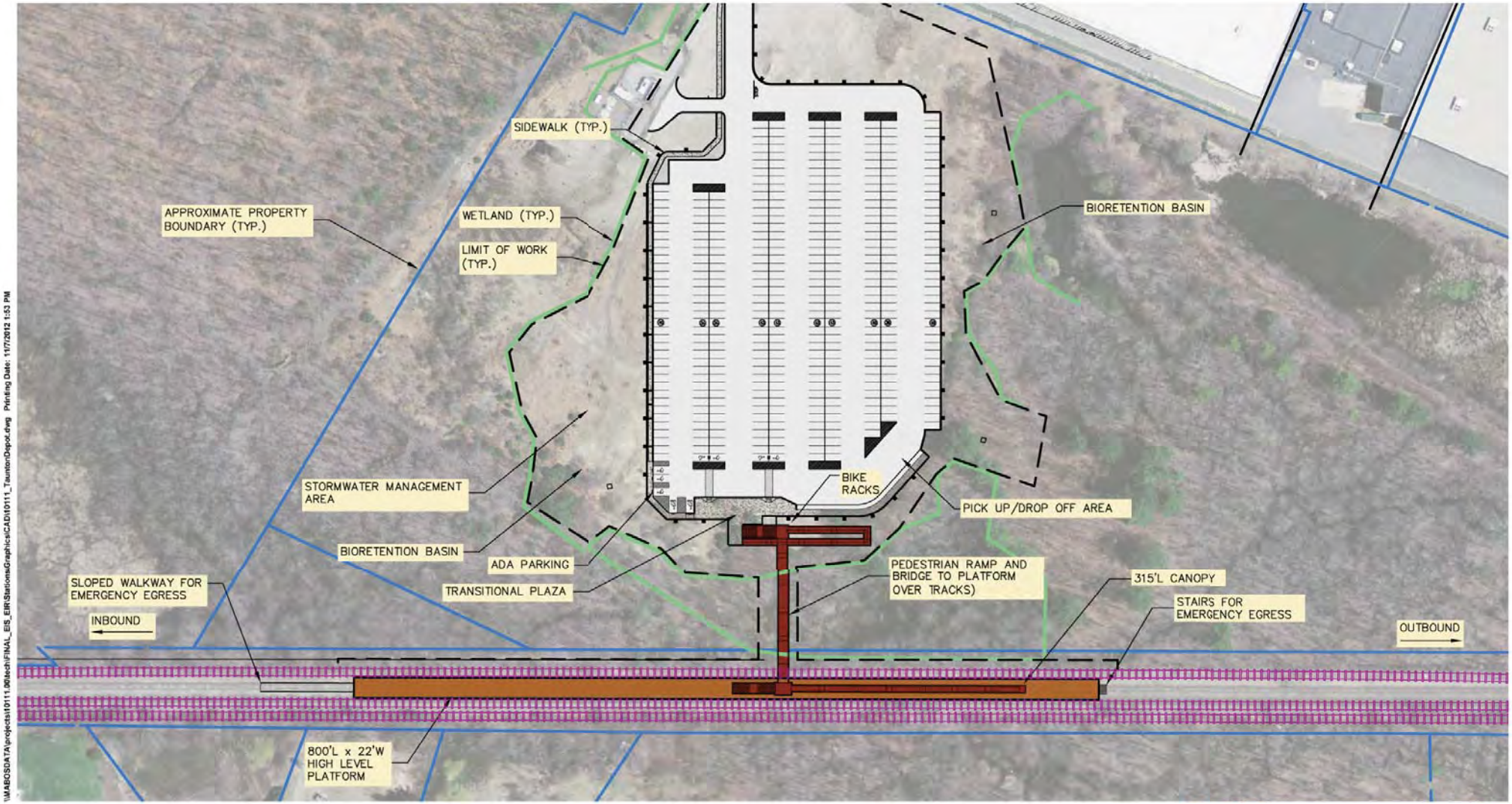

\\MABOSDATA\projects\10111.00\tech\FINAL_EIS_EIR\Stations\Graphics\CAD\10111_TauntonDepot.dwg Printing Date: 11/7/2012 1:53 PM

0 50 100 Feet

Parking Summary Chart

STANDARD SPACES	389
ACCESSIBLE SPACES	9
TOTAL SPACES	398

Legend

- *Platform*
- *Canopy*
- *Transitional Plaza*
- *Proposed Track*
- *Retaining Wall*
- *Property*
- *Proposed Roadway*
- *Limit of Work*
- *Wetlands*

Figure 3.2-26

Taunton Depot Station

Conceptual Station Design

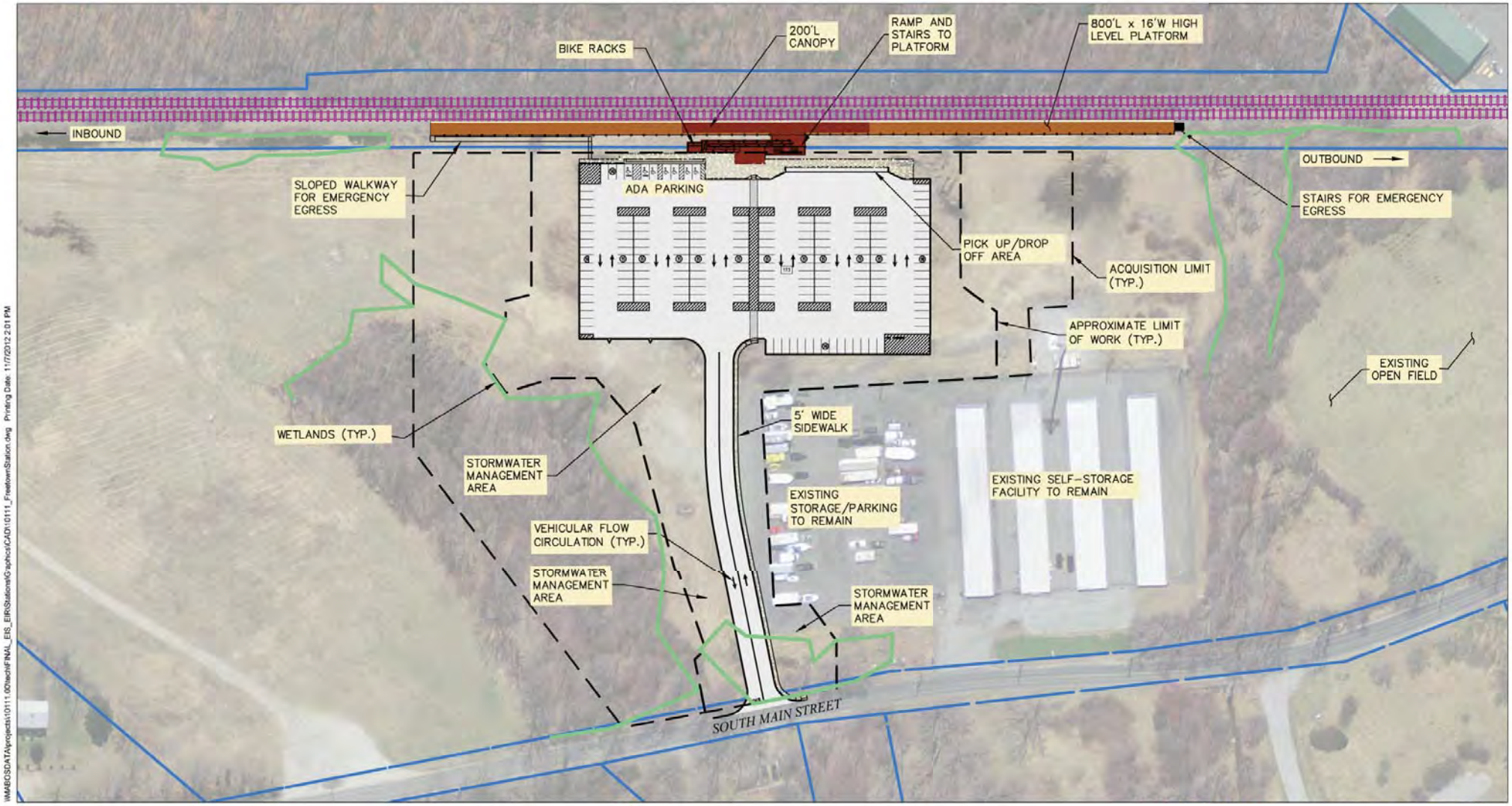

Parking Summary Chart

STANDARD SPACES	166
ACCESSIBLE SPACES	7
TOTAL SPACES	173

Legend

- Platform
- Canopy
- Transitional Plaza
- Proposed Track
- Retaining Wall
- Property
- Proposed Roadway
- Limit of Work
- Wetlands

0 50 100 Feet

Figure 3.2-27

Freetown Depot Station

Conceptual Station Design

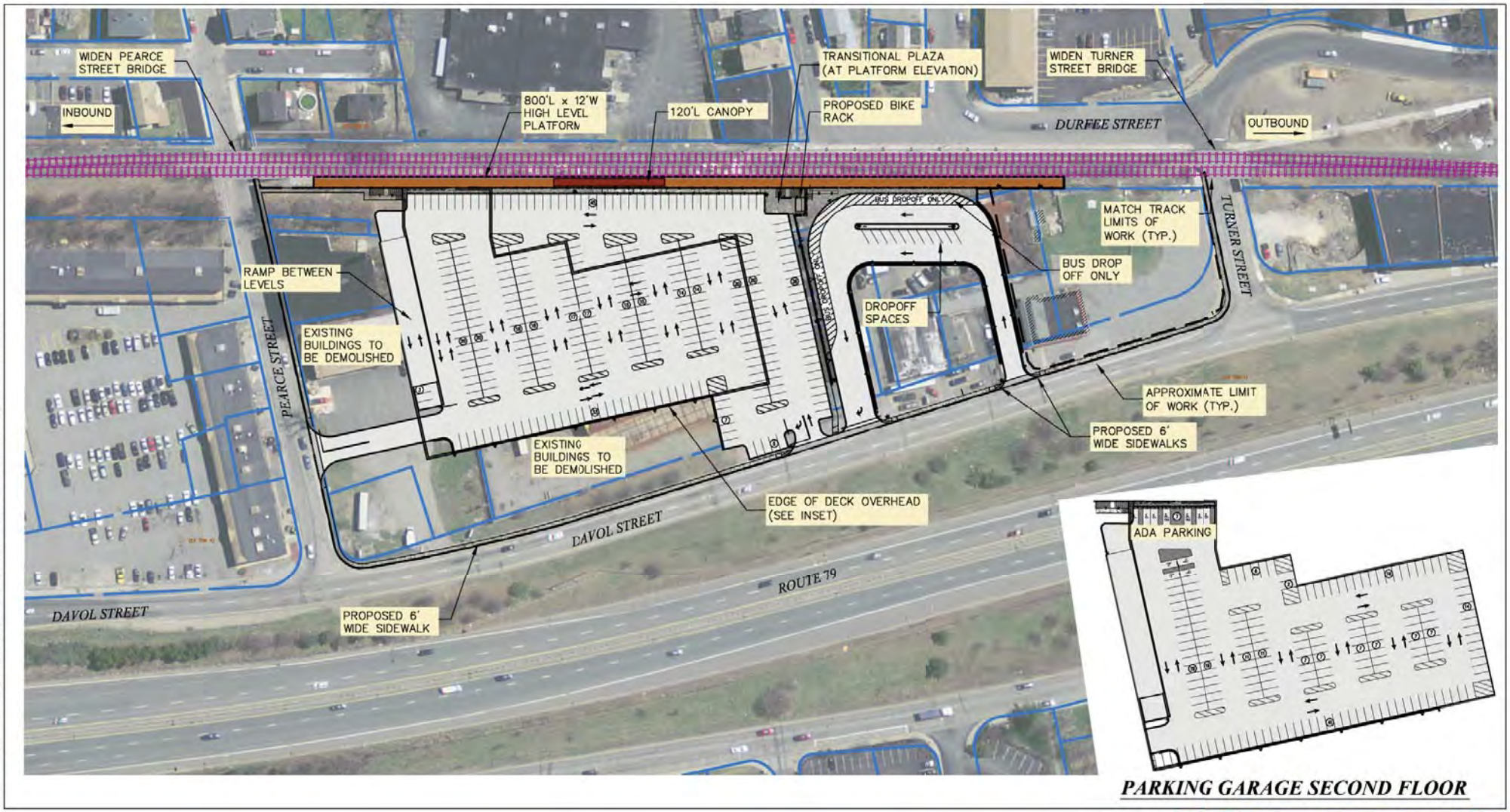

\\MABCSDATA\projects\10111 00\tech\FINAL_EIS_EIR\Stations\Graphics\CAD\10111_FallRiverDepot.dwg Printing Date: 11/7/2012 2:09 PM

0 50 100 Feet

Parking Summary Chart

STANDARD SPACES	507
ACCESSIBLE SPACES	11
TOTAL SPACES	518

Legend

- *Platform*
- *Canopy*
- *Transitional Plaza*
- *Proposed Track*
- *Retaining Wall*
- *Property*
- *Proposed Roadway*
- *Limit of Work*
- *Wetlands*

Figure 3.2-28

Fall River Depot Station

Conceptual Station Design

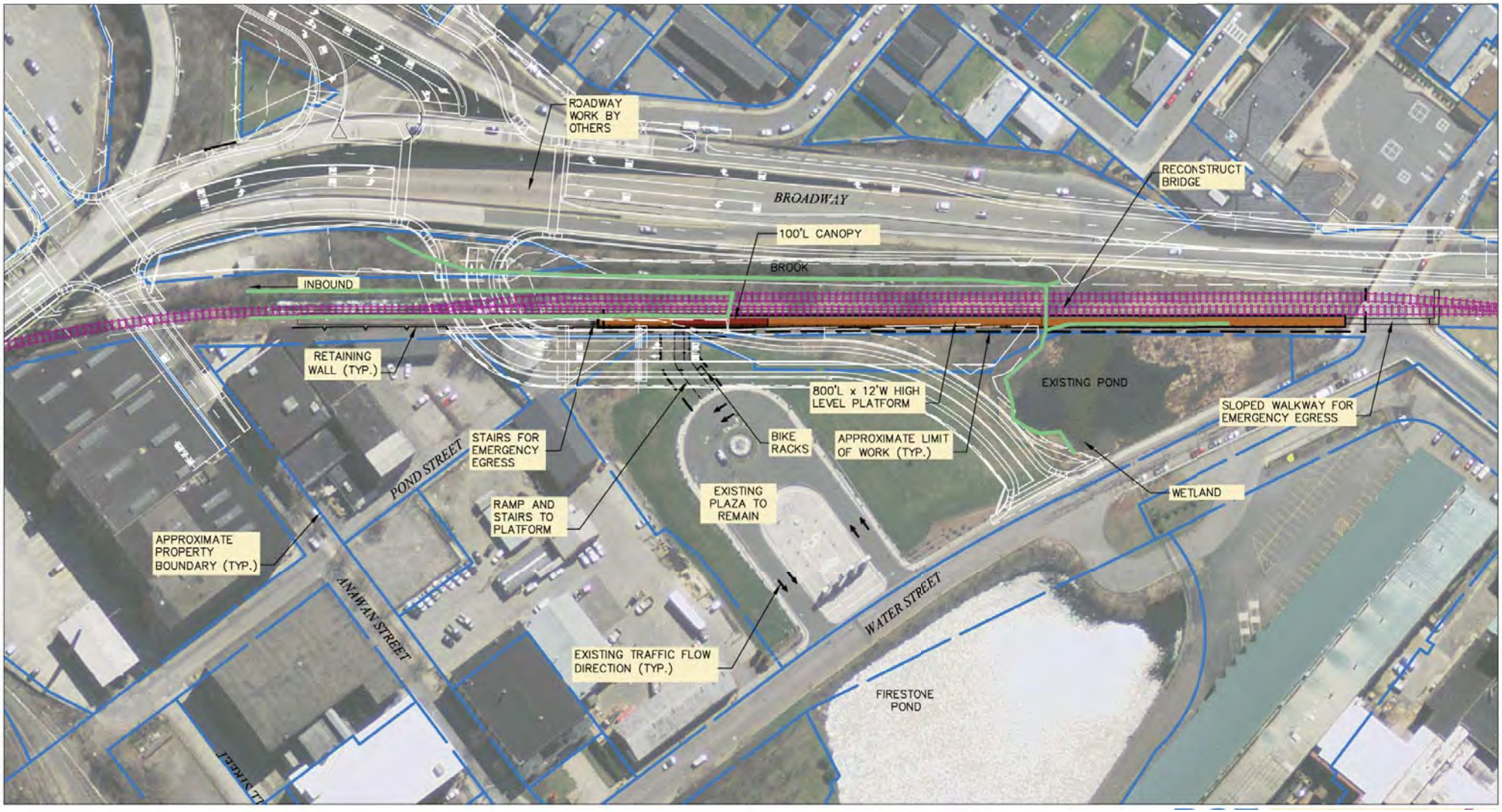

0 50 100 Feet

Parking Summary Chart

STANDARD SPACES	0
ACCESSIBLE SPACES	0
TOTAL SPACES	0

Legend

- *Platform*
- *Canopy*
- *Transitional Plaza*
- *Proposed Track*
- *Retaining Wall*
- *Property*
- *Proposed Roadway*
- *Limit of Work*
- *Wetlands*

Figure 3.2-29

Batteship Cove Station

Conceptual Station Design

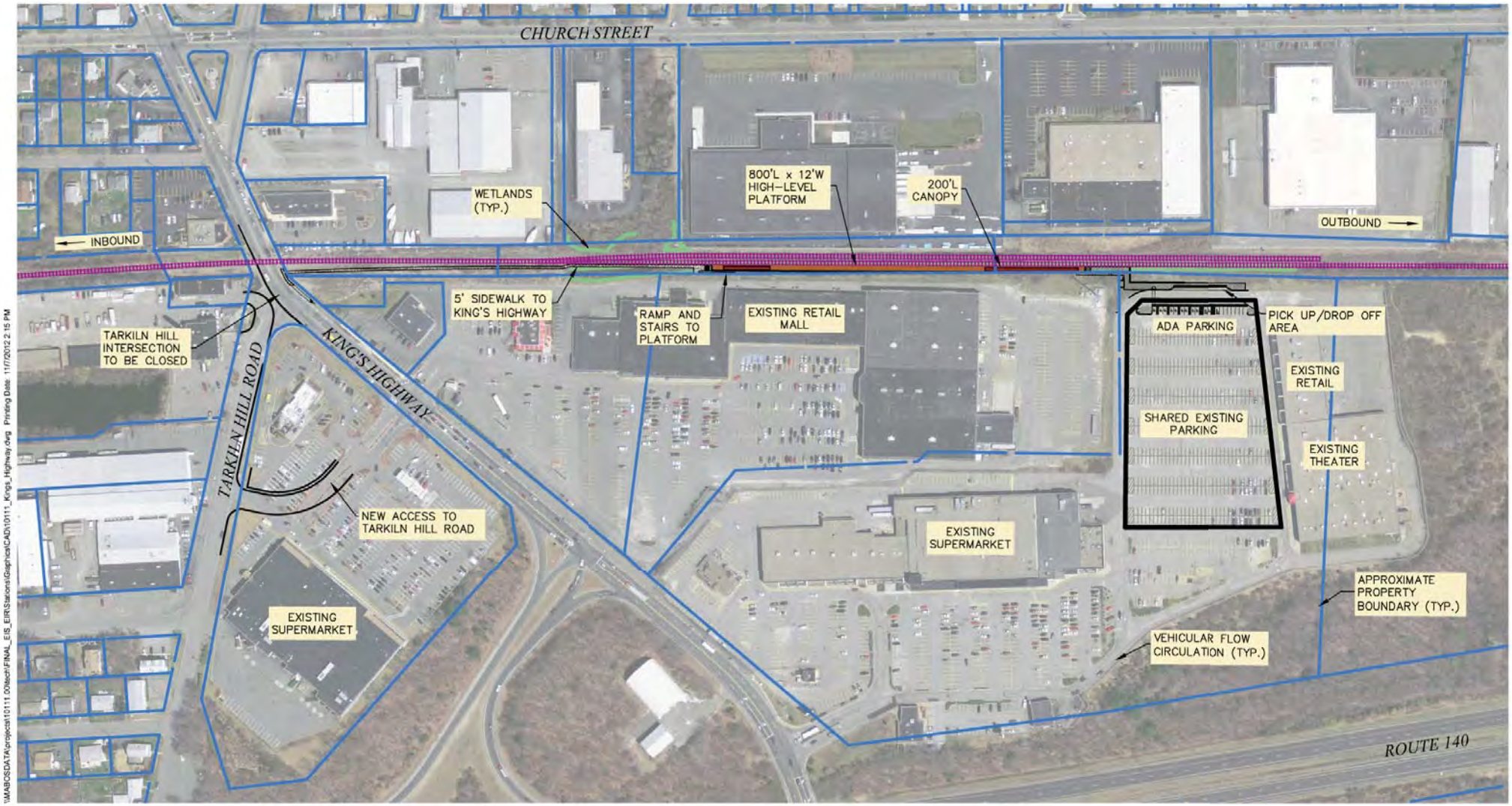

\\MABOSDATA\projects\10111.00\tech\FINAL_EIS_EIR\Stations\Graphics\CAD\10111_Kings_Highway.dwg Printing Date: 11/7/2012 2:15 PM

0 100 200 Feet

Parking Summary Chart

STANDARD SPACES	348
ACCESSIBLE SPACES	12
TOTAL SPACES	360

Legend

- *Platform*
- *Canopy*
- *Transitional Plaza*
- *Proposed Track*
- *Retaining Wall*
- *Property*
- *Proposed Roadway*
- *Limit of Work*
- *Wetlands*

Figure 3.2-30

King's Highway Station

Conceptual Station Design

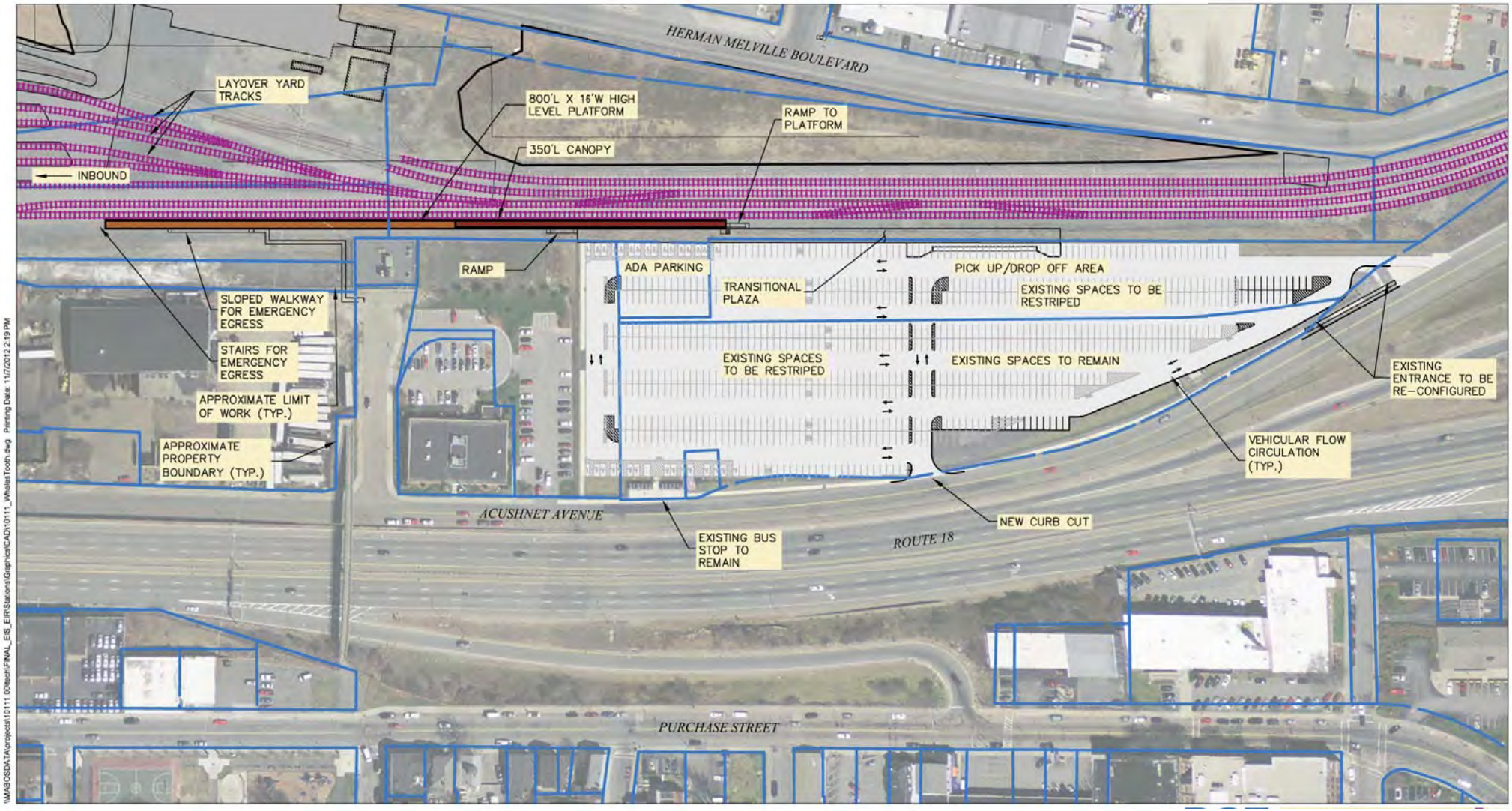

\\MABCSDATA\projects\10111 00\tech\FINAL_EIS_EIR\Stations\Graphics\CAD\10111_WhalesTooth.dwg Printing Date: 11/7/2012 2:19 PM

0 60 120 Feet

Parking Summary Chart

STANDARD SPACES	716
ACCESSIBLE SPACES	32
TOTAL SPACES	748

Legend

- *Platform*
- *Canopy*
- *Transitional Plaza*
- *Proposed Track*
- *Retaining Wall*
- *Property*
- *Proposed Roadway*
- *Limit of Work*
- *Wetlands*

Figure 3.2-31

Whale's Tooth Station

Conceptual Station Design

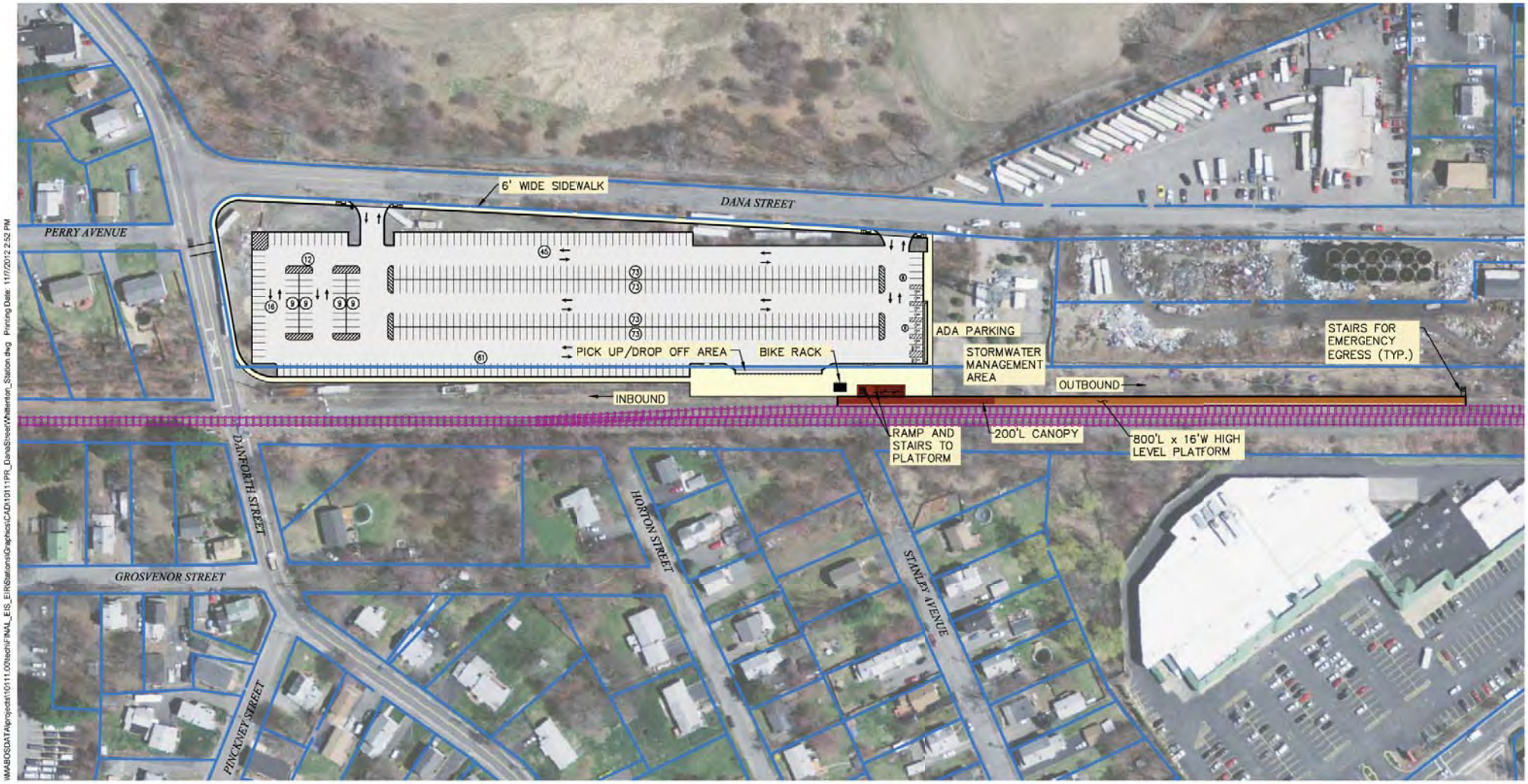

0 60 120 Feet

Parking Summary Chart

STANDARD SPACES	468
ACCESSIBLE SPACES	9
TOTAL SPACES	477

Legend

- Platform
- Canopy
- Transitional Plaza
- Proposed Track
- Property

Figure 3.2-32

Dana Street Station

Conceptual Station Design

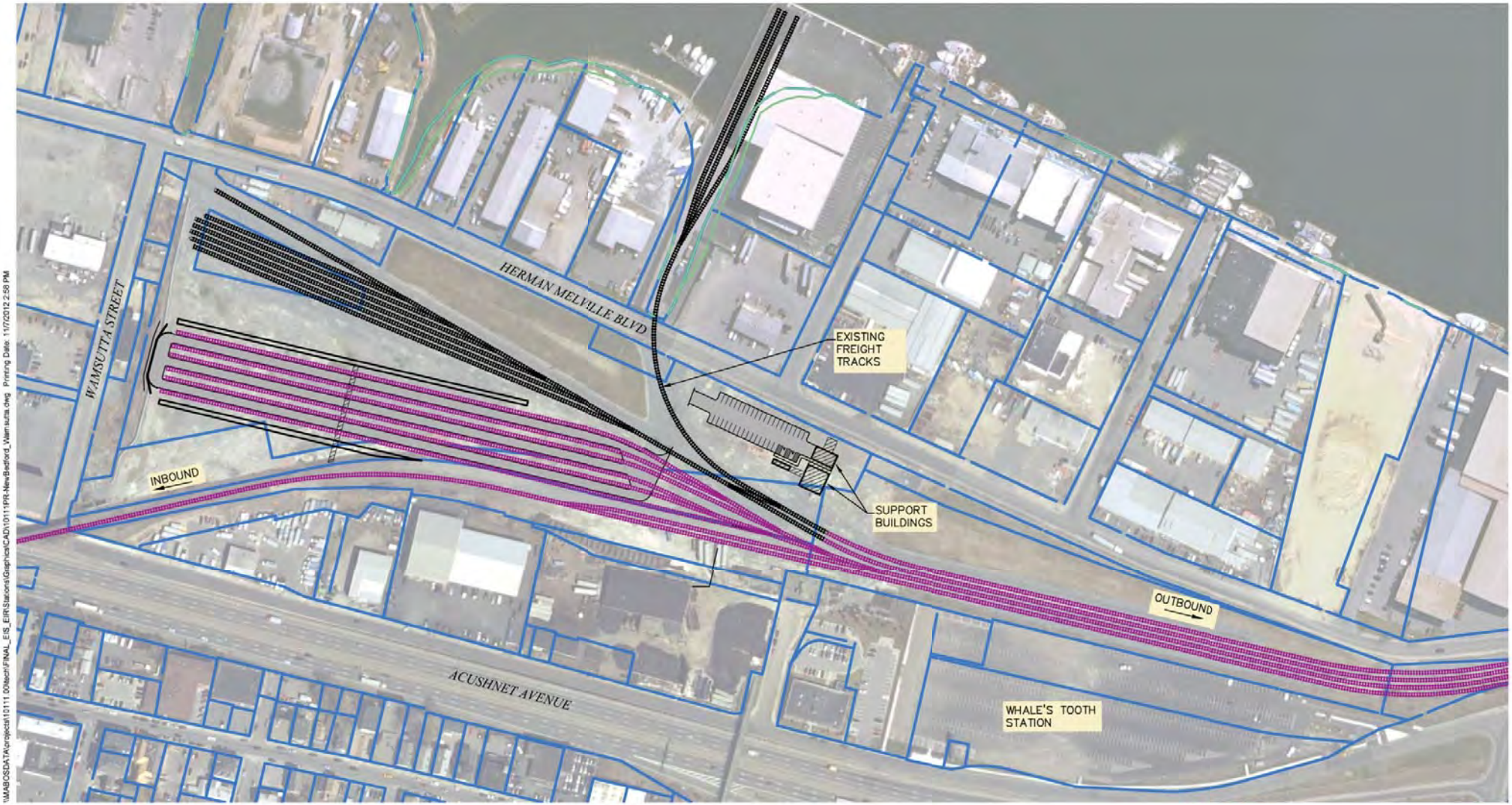

Parking Summary Chart

STANDARD SPACES	37
ACCESSIBLE SPACES	2
TOTAL SPACES	39

Legend

- Proposed Track
- Retaining Wall
- Wetlands
- Property
- Proposed Roadway
- Limit of Work

0 100 200 Feet

Figure 3.2-33

New Bedford Main Line

Wamsutta Layover Facility

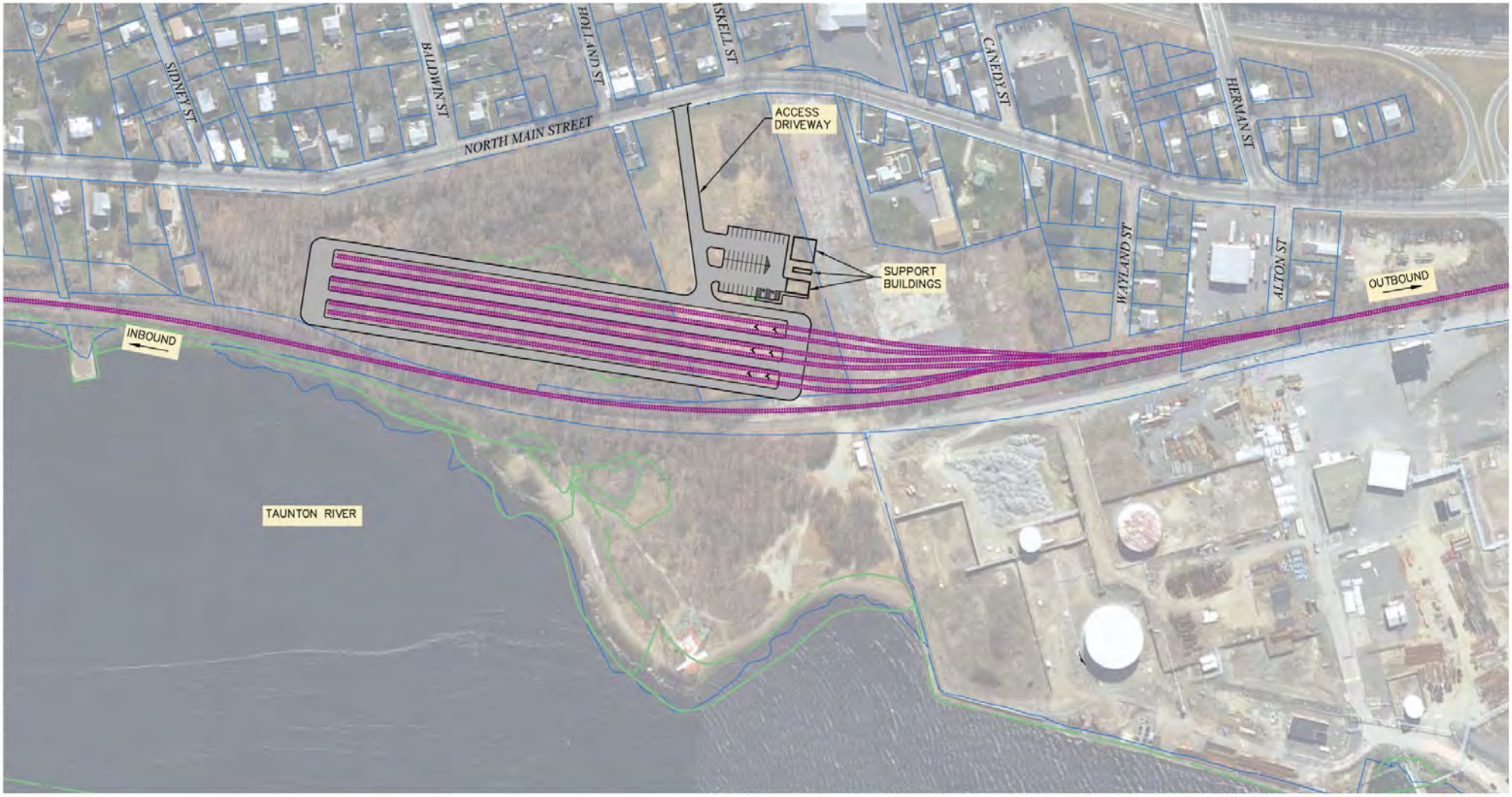

Parking Summary Chart

STANDARD SPACES	39
ACCESSIBLE SPACES	2
TOTAL SPACES	41

Legend

- *Proposed Track*
- *Retaining Wall*
- *Wetlands*
- *Property*
- *Proposed Roadway*
- *Limit of Work*

0 100 200 Feet

Figure 3.2-34

Fall River Secondary

Weaver's Cove East Layover Facility