HAMPTON ROADS TRANSIT

U.S. Department of Transportation
Federal Transit Administration

Draft Environmental Impact Statement

VIRGINIA BEACH TRANSIT EXTENSION STUDY

Appendix G-1

Draft Conceptual Drawings

Light Rail Transit

Alternative 1A (Town Center)

Alternative 1B (Rosemont)

Alternative 2 (NSRR)

Newtown Road Station to the Proposed Oceanfront Station

February 2015

Cover image: courtesy of the City of Virginia Beach

$TIME$

$DATE$

$FILE$

DRAWING NUMBER	DRAWING TITLE
GENERAL DRAWINGS	
VB-COVER	COVER SHEET
VB-IN-0001	INDEX OF DRAWINGS
VB-GP-1001	SHEET LAYOUT PLAN - SHEET 1 OF 3
VB-GP-1002	SHEET LAYOUT PLAN - SHEET 2 OF 3
VB-GP-1003	SHEET LAYOUT PLAN - SHEET 3 OF 3
TRACK DRAWINGS	
VB-TK-0101	TRACK TYPICAL SECTIONS - SHEET 1 OF 9
VB-TK-0102	TRACK TYPICAL SECTIONS - SHEET 2 OF 9
VB-TK-0103	TRACK TYPICAL SECTIONS - SHEET 3 OF 9
VB-TK-0104	TRACK TYPICAL SECTIONS - SHEET 4 OF 9
VB-TK-0105	TRACK TYPICAL SECTIONS - SHEET 5 OF 9
VB-TK-0106	TRACK TYPICAL SECTIONS - SHEET 6 OF 9
VB-TK-0107	TRACK TYPICAL SECTIONS - SHEET 7 OF 9
VB-TK-0108	TRACK TYPICAL SECTIONS - SHEET 8 OF 9
VB-TK-0109	TRACK TYPICAL SECTIONS - SHEET 9 OF 9
VB-TK-1001	TRACK ALIGNMENT PLAN AND PROFILE - SHEET 1 OF 60
VB-TK-1002	TRACK ALIGNMENT PLAN AND PROFILE - SHEET 2 OF 60
VB-TK-1003	TRACK ALIGNMENT PLAN AND PROFILE - SHEET 3 OF 60
VB-TK-1004	TRACK ALIGNMENT PLAN AND PROFILE - SHEET 4 OF 60
VB-TK-1005	TRACK ALIGNMENT PLAN AND PROFILE - SHEET 5 OF 60
VB-TK-1006	TRACK ALIGNMENT PLAN AND PROFILE - SHEET 6 OF 60
VB-TK-1007	TRACK ALIGNMENT PLAN AND PROFILE - SHEET 7 OF 60
VB-TK-1008	TRACK ALIGNMENT PLAN AND PROFILE - SHEET 8 OF 60
VB-TK-1009	TRACK ALIGNMENT PLAN AND PROFILE - SHEET 9 OF 60
VB-TK-1010	TRACK ALIGNMENT PLAN AND PROFILE - SHEET 10 OF 60
VB-TK-1011	TRACK ALIGNMENT PLAN AND PROFILE - SHEET 11 OF 60
VB-TK-1012	TRACK ALIGNMENT PLAN AND PROFILE - SHEET 12 OF 60
VB-TK-1013	TRACK ALIGNMENT PLAN AND PROFILE - SHEET 13 OF 60
VB-TK-1014	TRACK ALIGNMENT PLAN AND PROFILE - SHEET 14 OF 60
VB-TK-1014W	TRACK ALIGNMENT PLAN AND PROFILE - TOWN CENTER ALT. WEST STATION OPTION
VB-TK-1015A	TRACK ALIGNMENT PLAN AND PROFILE - INDEPENDENCE STATION OPTION
VB-TK-1016A	TRACK ALIGNMENT PLAN AND PROFILE - INDEPENDENCE STATION OPTION
VB-TK-1017A	TRACK ALIGNMENT PLAN AND PROFILE - INDEPENDENCE STATION OPTION
VB-TK-1015B	TRACK ALIGNMENT PLAN AND PROFILE - MARKET ST. STATION OPTION
VB-TK-1016B	TRACK ALIGNMENT PLAN AND PROFILE - MARKET ST. STATION OPTION
VB-TK-1017B	TRACK ALIGNMENT PLAN AND PROFILE - MARKET ST. STATION OPTION
VB-TK-1015C	TRACK ALIGNMENT PLAN AND PROFILE - CONSTITUTION STATION OPTION
VB-TK-1016C	TRACK ALIGNMENT PLAN AND PROFILE - CONSTITUTION STATION OPTION
VB-TK-1017C	TRACK ALIGNMENT PLAN AND PROFILE - CONSTITUTION STATION OPTION
VB-TK-1015W	TRACK ALIGNMENT PLAN AND PROFILE - TOWN CENTER ALT. WEST STATION OPTION
VB-TK-1015X	TRACK ALIGNMENT PLAN AND PROFILE - TOWN CENTER ALT. INDEPENDENCE OPTION
VB-TK-1016X	TRACK ALIGNMENT PLAN AND PROFILE - TOWN CENTER ALT. INDEPENDENCE OPTION
VB-TK-1015Y	TRACK ALIGNMENT PLAN AND PROFILE - TOWN CENTER ALT. MARKET ST. OPTION
VB-TK-1016Y	TRACK ALIGNMENT PLAN AND PROFILE - TOWN CENTER ALT. MARKET ST. OPTION
VB-TK-1015Z	TRACK ALIGNMENT PLAN AND PROFILE - TOWN CENTER ALT. CONSTITUTION OPTION
VB-TK-1016Z	TRACK ALIGNMENT PLAN AND PROFILE - TOWN CENTER ALT. CONSTITUTION OPTION
VB-TK-1017Z	TRACK ALIGNMENT PLAN AND PROFILE - TOWN CENTER ALT. CONSTITUTION OPTION
VB-TK-1018	TRACK ALIGNMENT PLAN AND PROFILE - SHEET 18 OF 60
VB-TK-1019	TRACK ALIGNMENT PLAN AND PROFILE - SHEET 19 OF 60
VB-TK-1020	TRACK ALIGNMENT PLAN AND PROFILE - SHEET 20 OF 60
VB-TK-1021	TRACK ALIGNMENT PLAN AND PROFILE - SHEET 21 OF 60
VB-TK-1022	TRACK ALIGNMENT PLAN AND PROFILE - SHEET 22 OF 60
VB-TK-1023	TRACK ALIGNMENT PLAN AND PROFILE - SHEET 23 OF 60
VB-TK-1023A	TRACK ALIGNMENT PLAN AND PROFILE - ROSEMONT ALTERNATIVE
VB-TK-1024	TRACK ALIGNMENT PLAN AND PROFILE - SHEET 24 OF 60
VB-TK-1024A	TRACK ALIGNMENT PLAN AND PROFILE - ROSEMONT ALTERNATIVE
VB-TK-1025	TRACK ALIGNMENT PLAN AND PROFILE - SHEET 25 OF 60
VB-TK-1026	TRACK ALIGNMENT PLAN AND PROFILE - SHEET 26 OF 60
VB-TK-1027	TRACK ALIGNMENT PLAN AND PROFILE - SHEET 27 OF 60
VB-TK-1028	TRACK ALIGNMENT PLAN AND PROFILE - SHEET 28 OF 60
VB-TK-1029	TRACK ALIGNMENT PLAN AND PROFILE - SHEET 29 OF 60
VB-TK-1030	TRACK ALIGNMENT PLAN AND PROFILE - SHEET 30 OF 60
VB-TK-1031	TRACK ALIGNMENT PLAN AND PROFILE - SHEET 31 OF 60
VB-TK-1032	TRACK ALIGNMENT PLAN AND PROFILE - SHEET 32 OF 60
VB-TK-1033	TRACK ALIGNMENT PLAN AND PROFILE - SHEET 33 OF 60
VB-TK-1034	TRACK ALIGNMENT PLAN AND PROFILE - SHEET 34 OF 60
VB-TK-1035	TRACK ALIGNMENT PLAN AND PROFILE - SHEET 35 OF 60
VB-TK-1036	TRACK ALIGNMENT PLAN AND PROFILE - SHEET 36 OF 60
VB-TK-1037	TRACK ALIGNMENT PLAN AND PROFILE - SHEET 37 OF 60
VB-TK-1038	TRACK ALIGNMENT PLAN AND PROFILE - SHEET 38 OF 60
VB-TK-1039	TRACK ALIGNMENT PLAN AND PROFILE - SHEET 39 OF 60
VB-TK-1040	TRACK ALIGNMENT PLAN AND PROFILE - SHEET 40 OF 60
VB-TK-1041	TRACK ALIGNMENT PLAN AND PROFILE - SHEET 41 OF 60
VB-TK-1042	TRACK ALIGNMENT PLAN AND PROFILE - SHEET 42 OF 60
VB-TK-1043	TRACK ALIGNMENT PLAN AND PROFILE - SHEET 43 OF 60
VB-TK-1044	TRACK ALIGNMENT PLAN AND PROFILE - SHEET 44 OF 60
VB-TK-1045	TRACK ALIGNMENT PLAN AND PROFILE - SHEET 45 OF 60
VB-TK-1046	TRACK ALIGNMENT PLAN AND PROFILE - SHEET 46 OF 60
VB-TK-1047	TRACK ALIGNMENT PLAN AND PROFILE - SHEET 47 OF 60
VB-TK-1048	TRACK ALIGNMENT PLAN AND PROFILE - SHEET 48 OF 60
VB-TK-1049	TRACK ALIGNMENT PLAN AND PROFILE - SHEET 49 OF 60
VB-TK-1050	TRACK ALIGNMENT PLAN AND PROFILE - SHEET 50 OF 60
VB-TK-1051	TRACK ALIGNMENT PLAN AND PROFILE - SHEET 51 OF 60
VB-TK-1052	TRACK ALIGNMENT PLAN AND PROFILE - SHEET 52 OF 60
VB-TK-1053	TRACK ALIGNMENT PLAN AND PROFILE - SHEET 53 OF 60
VB-TK-1054	TRACK ALIGNMENT PLAN AND PROFILE - SHEET 54 OF 60
VB-TK-1055	TRACK ALIGNMENT PLAN AND PROFILE - SHEET 55 OF 60
VB-TK-1056	TRACK ALIGNMENT PLAN AND PROFILE - SHEET 56 OF 60
VB-TK-1057	TRACK ALIGNMENT PLAN AND PROFILE - SHEET 57 OF 60
VB-TK-1058	TRACK ALIGNMENT PLAN AND PROFILE - SHEET 58 OF 60
VB-TK-1059	TRACK ALIGNMENT PLAN AND PROFILE - SHEET 59 OF 60
VB-TK-1060	TRACK ALIGNMENT PLAN AND PROFILE - SHEET 60 OF 60
VB-TK-7001	WITCHDUCK STATION PARK AND RIDE SHEET 1 OF 5
VB-TK-7002	TOWN CENTER STATION PARK AND RIDE SHEET 2 OF 5
VB-TK-7003	ROSEMONT STATION PARK AND RIDE SHEET 3 OF 5
VB-TK-7004	LYNNHAVEN STATION PARK AND RIDE SHEET 4 OF 5
VB-TK-7005	NORTH OCEANA STATION PARK AND RIDE SHEET 5 OF 5
VB-TK-5001A	POTTERS ROAD SITE VSMF TRACK PLAN - SHEET 1 OF 3
VB-TK-5002A	POTTERS ROAD SITE VSMF TRACK PLAN - SHEET 2 OF 3
VB-TK-5003A	POTTERS ROAD SITE VSMF TRACK PLAN - SHEET 3 OF 3
VB-TK-5004A	POTTERS ROAD SITE VSMF LAYOUT

GENERAL NOTES

1. EXISTING UTILITIES ARE BASED ON SURVEY PROVIDED BY THE CITY OF VIRGINIA BEACH AND DESIGN DRAWINGS PROVIDED BY UTILITY AGENCIES.
2. EXISTING NORFOLK SOUTHERN RAILWAY RIGHT-OF-WAY LINES ARE BASED ON SURVEY PROVIDED BY THE CITY OF VIRGINIA BEACH.
3. RIGHT-OF-WAY FENCE TO BE PLACED ALONG BALLASTED TRACK SECTIONS.
4. SHEETS IN THE TOWN CENTER AREA:

   SHEETS LABELED "A", "B", AND "C" (SUCH AS VB-TK-1015A) ARE FOR ALTERNATIVES THAT EXTEND EAST OF TOWN CENTER (ALT. 1B-ROSEMONT, ALT. 2-NSRR, ALT. 3-HILLTOP).

   SHEETS LABELED "W", "X", "Y", AND "Z" ARE FOR ALTERNATIVE 1A, WHICH ENDS IN THE TOWN CENTER AREA.

DRAFT
NOT FOR CONSTRUCTION

CONTRACT NO.

DRAWING NO. VB-IN-0001

OF

INDEX OF DRAWINGS

DRAFT

DESIGN RWB	DRWN RWB	CHCK KVL	APPR
DATE	DATE	DATE	DATE

NO.	REVISION DESCRIPTION	BY	DATE

PLANS PREPARED BY: HDR

HAMPTON ROADS TRANSIT

VIRGINIA BEACH TRANSIT EXTENSION STUDY

DRAFT
NOT FOR CONSTRUCTION

HAMPTON ROADS TRANSIT	PLANS PREPARED BY: HDR				DESIGN RWB	DATE	SHEET LAYOUT PLAN	CONTRACT NO.
					DRWN RWB	DATE	SHEET 1 OF 3	DRAWING NO. VB-GP-1001
VIRGINIA BEACH TRANSIT EXTENSION STUDY					CKD KVL	DATE		
		NO.	REVISION DESCRIPTION	BY	DATE APPR	DATE	DRAFT	OF

$TIME$

$DATE$

$FILE$

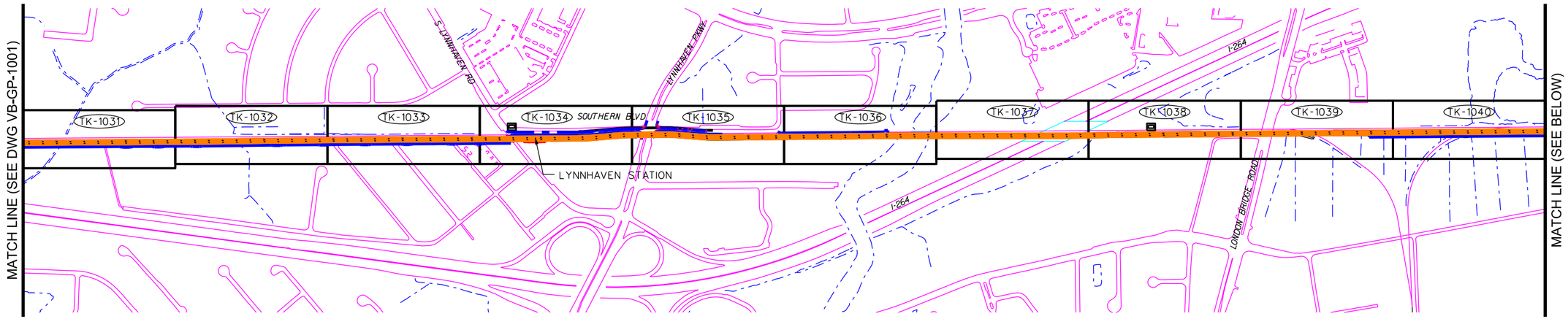

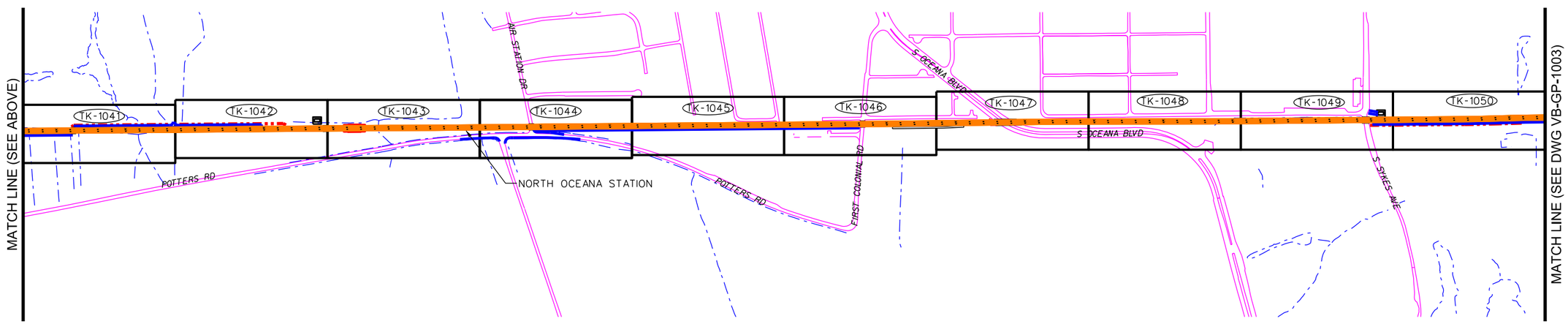

DRAFT
NOT FOR CONSTRUCTION

CONTRACT NO.

DRAWING NO. VB-GP-1002

OF

SHEET LAYOUT PLAN
SHEET 2 OF 3

DRAFT

APPR	CKCK	DRWN	DESIGN
	KVL	RWB	RWB
DATE	DATE	DATE	DATE

NO.	REVISION DESCRIPTION	BY	DATE

PLANS PREPARED BY:

HDR

HAMPTON ROADS TRANSIT

VIRGINIA BEACH TRANSIT EXTENSION STUDY

$TIME$

$DATE$

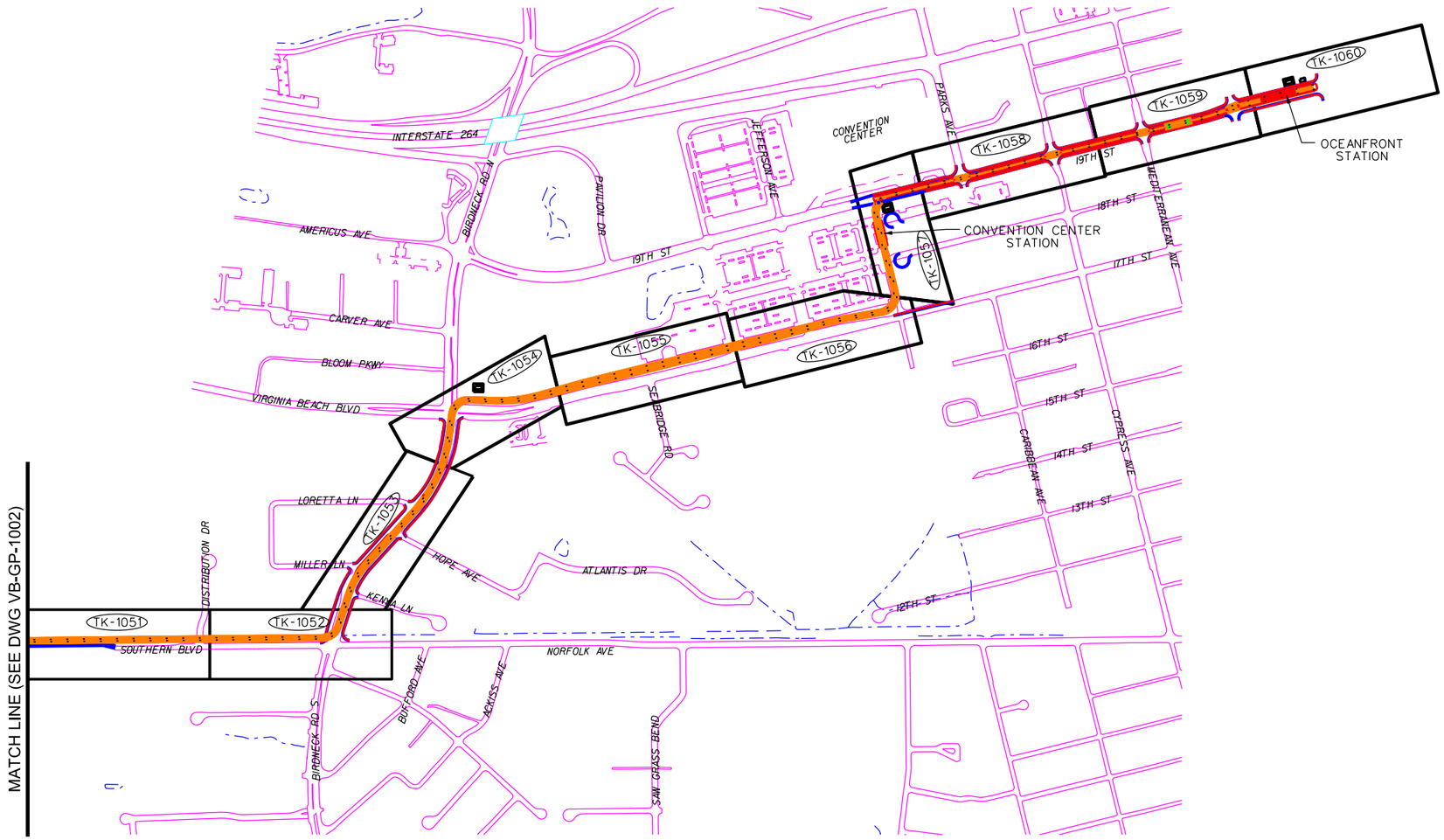

DRAFT
NOT FOR CONSTRUCTION

$FILE$

CONTRACT NO.	DRAWING NO. VB-GP-1003	OF

SHEET LAYOUT PLAN
SHEET 3 OF 3

DRAFT

DESIGN RWB	DRWN RWB	CHCK KVL	APPR
DATE	DATE	DATE	DATE

NO.	REVISION DESCRIPTION	BY	DATE

PLANS PREPARED BY: HDR

HAMPTON ROADS TRANSIT

VIRGINIA BEACH TRANSIT EXTENSION STUDY

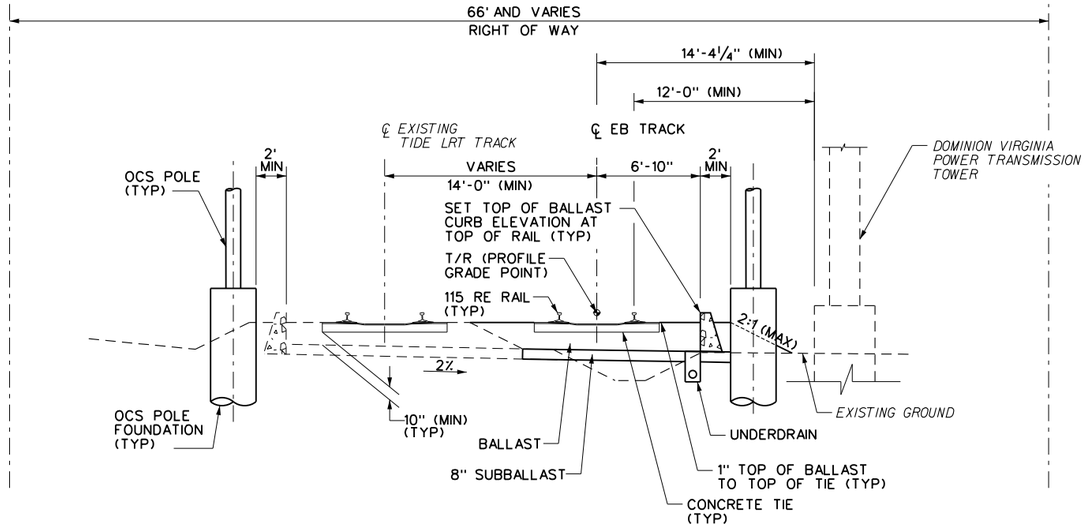

LRT BALLAST TRACK TYPICAL SECTION WEST OF NEWTOWN ROAD

DRAFT
NOT FOR CONSTRUCTION

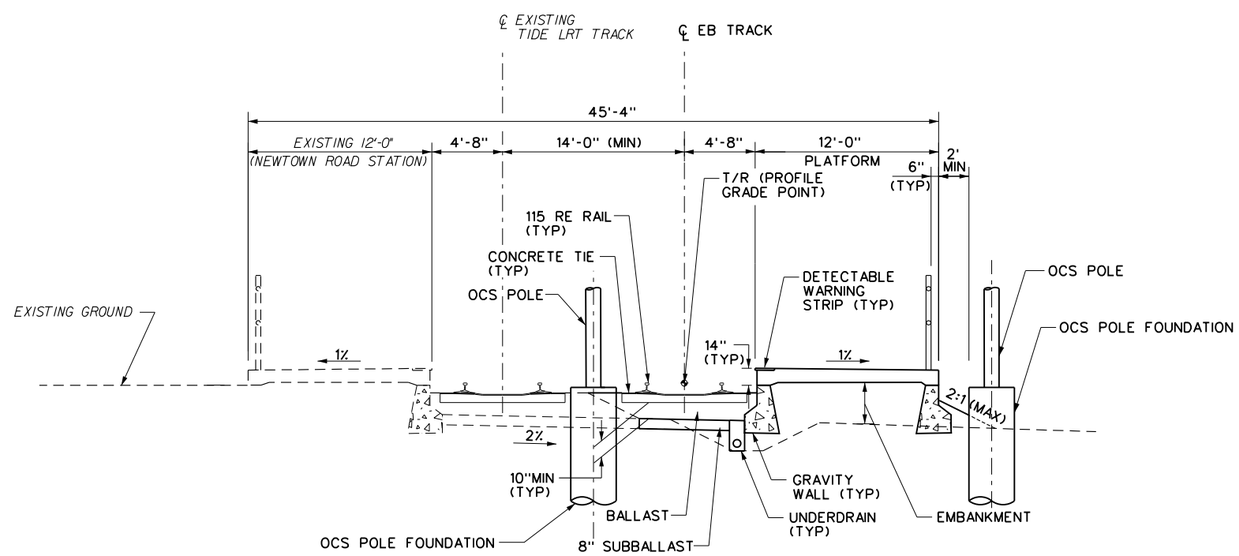

LRT BALLASTED TRACK TYPICAL SECTION AT NEWTOWN ROAD STATION

5 0 5 10
SCALE IN FEET

CONTRACT NO.
DRAWING NO. VB-TK-0101
OF

LRT TYPICAL SECTIONS
SHEET 1 OF 9

DRAFT

DESIGN	SAB	DATE	
DRWN	SAB	DATE	
CHCK	KVL	DATE	
APPR	KVL	DATE	

NO.	REVISION DESCRIPTION	BY	DATE

PLANS PREPARED BY: HDR

HAMPTON ROADS TRANSIT

VIRGINIA BEACH TRANSIT EXTENSION STUDY

9:33:37 PM
8/8/2013
c:\pwworking\pittld\0203957\S_VB-TK-0101.dgn

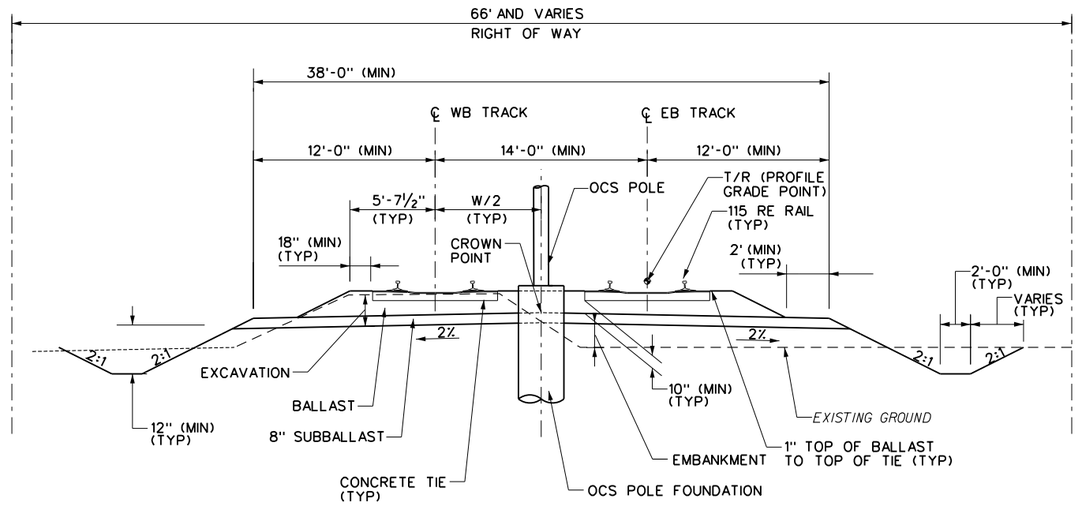

LRT TANGENT BALLASTED TRACK
TYPICAL SECTION WITH DITCHES

DRAFT
NOT FOR CONSTRUCTION

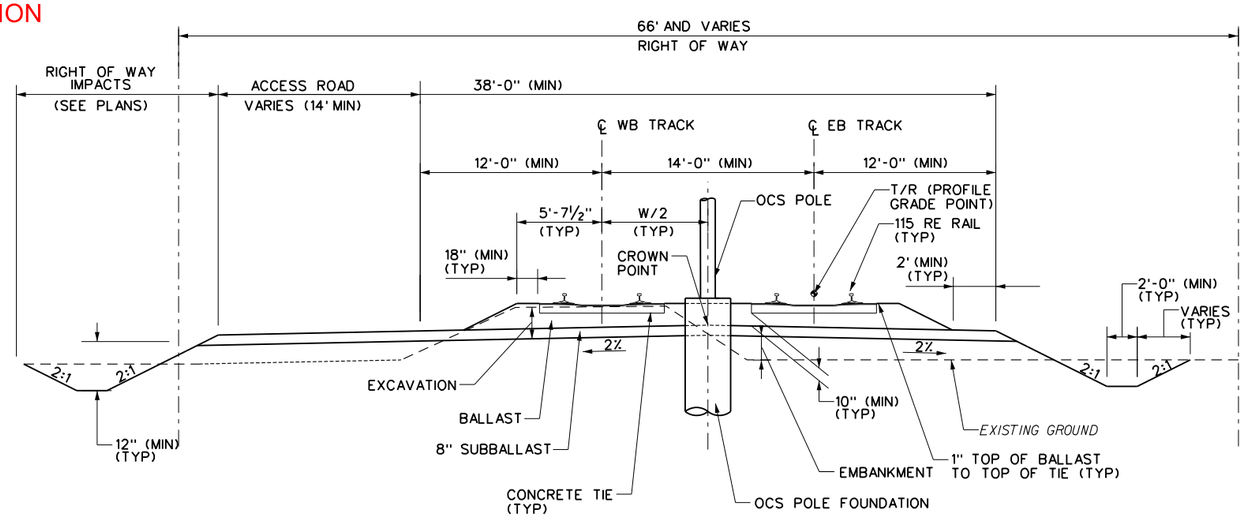

LRT TANGENT BALLASTED TRACK
TYPICAL SECTION WITH ACCESS ROAD
(ACCESS ROAD SHOWN ON LEFT SIDE, RIGHT SIDE OPPOSITE HAND)

5 0 5 10
SCALE IN FEET

CONTRACT NO.
DRAWING NO. VB-TK-0102
OF

LRT TYPICAL SECTIONS
SHEET 2 OF 9

DRAFT

DESIGN SAB	DRWN SAB	CHCK KVL	APPR KVL
DATE	DATE	DATE	DATE

NO.	REVISION DESCRIPTION	BY	DATE

PLANS PREPARED BY: HDR

HAMPTON ROADS TRANSIT

VIRGINIA BEACH TRANSIT EXTENSION STUDY

9:34:09 PM
8/8/2013
c:\pwworking\pittld\0203957\S_VB-TK-0102.dgn

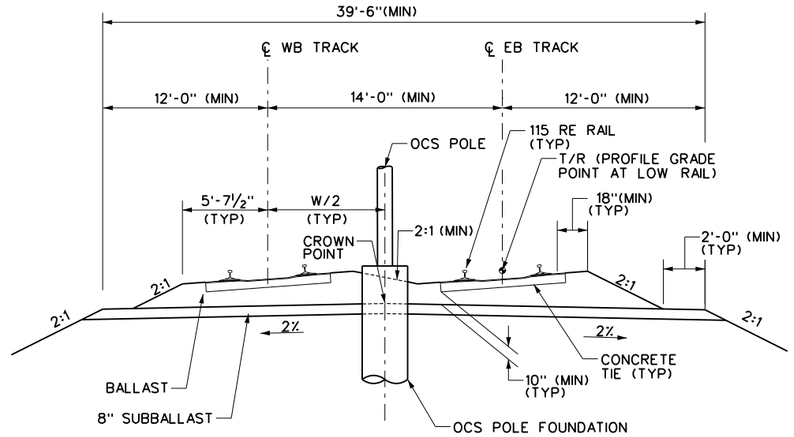

LRT CURVED (SUPERELEVATED) BALLASTED TRACK TYPICAL SECTION

(LEFT HAND HORIZONTAL CURVE SHOWN)

DRAFT
NOT FOR CONSTRUCTION

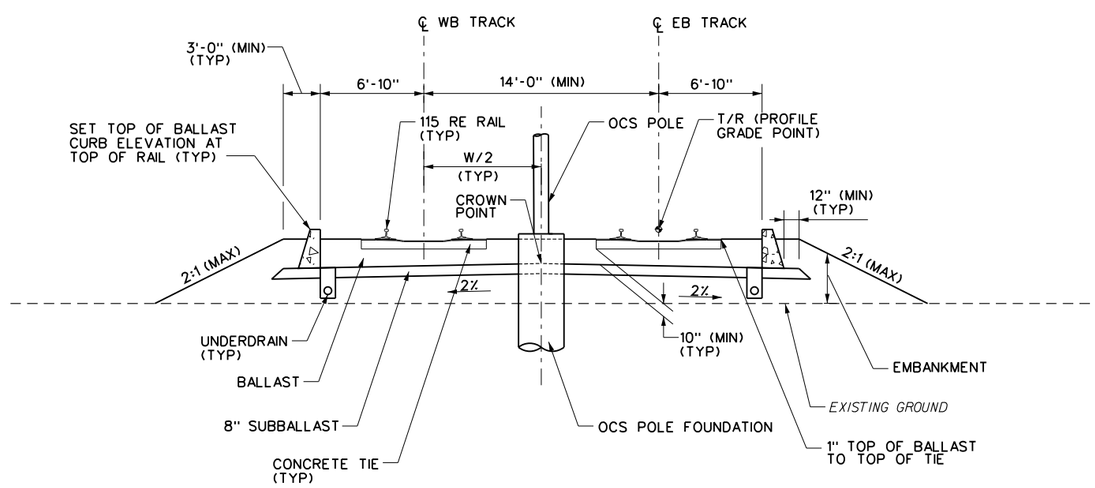

LRT TANGENT BALLASTED TRACK TYPICAL SECTION WITH BALLAST CURB

5 0 5 10
SCALE IN FEET

NO.	REVISION DESCRIPTION	BY	DATE

PLANS PREPARED BY: HDR

HAMPTON ROADS TRANSIT

VIRGINIA BEACH TRANSIT EXTENSION STUDY

DESIGN	DRWN	CHCK	APPR
SAB	SAB	KVL	KVL
DATE	DATE	DATE	DATE

LRT TYPICAL SECTIONS
SHEET 3 OF 9

DRAFT

CONTRACT NO.

DRAWING NO. VB-TK-0103

OF

9:34:38 PM

8/8/2013

c:\pwworking\pittld\0203957\S_VB-TK-0103.dgn

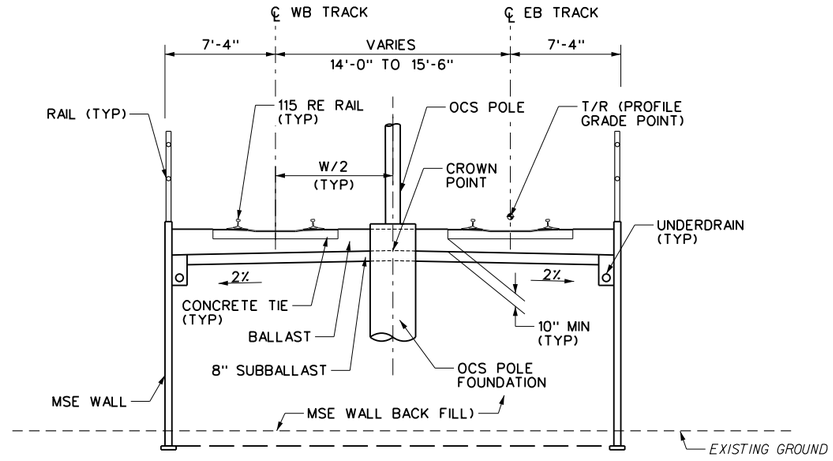

LRT TANGENT BALLASTED TRACK
TYPICAL SECTION WITH MSE WALLS

DRAFT
NOT FOR CONSTRUCTION

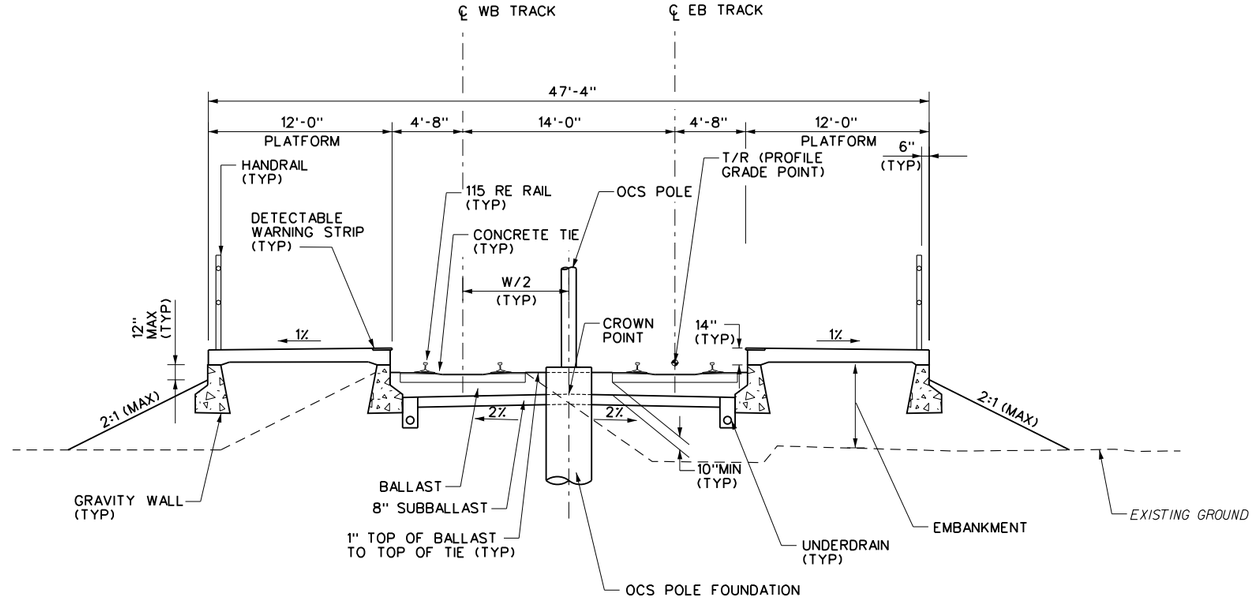

LRT BALLASTED TRACK
TYPICAL SECTION WITH SIDE PLATFORMS

5 0 5 10
SCALE IN FEET

CONTRACT NO.	DRAWING NO. VB-TK-0104	OF

LRT TYPICAL SECTIONS
SHEET 4 OF 9

DRAFT

DESIGN	DRWN	CHCK	APPR	DATE
SAB	SAB	KVL	KVL	

NO.	REVISION DESCRIPTION	BY	DATE

PLANS PREPARED BY:
HDR
HAMPTON ROADS TRANSIT

VIRGINIA BEACH TRANSIT EXTENSION STUDY

9:35:04 PM
8/8/2013
c:\pwworking\pittld\0203957\S_VB-TK-0104.dgn

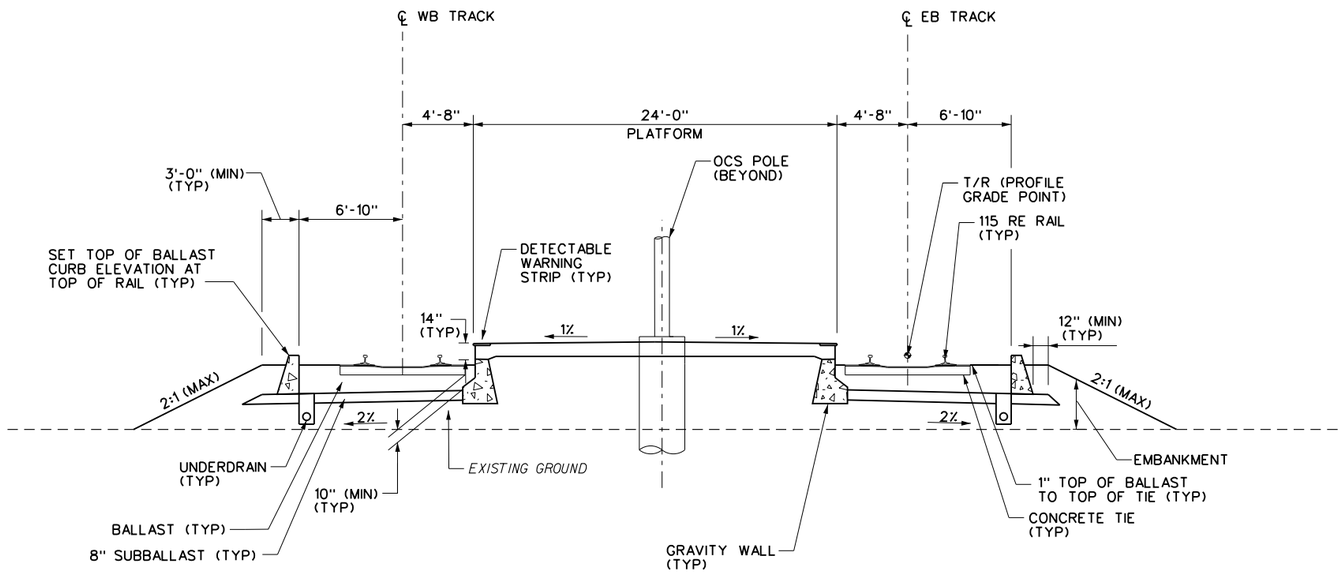

LRT BALLASTED TYPICAL SECTION WITH CENTER PLATFORM

DRAFT
NOT FOR CONSTRUCTION

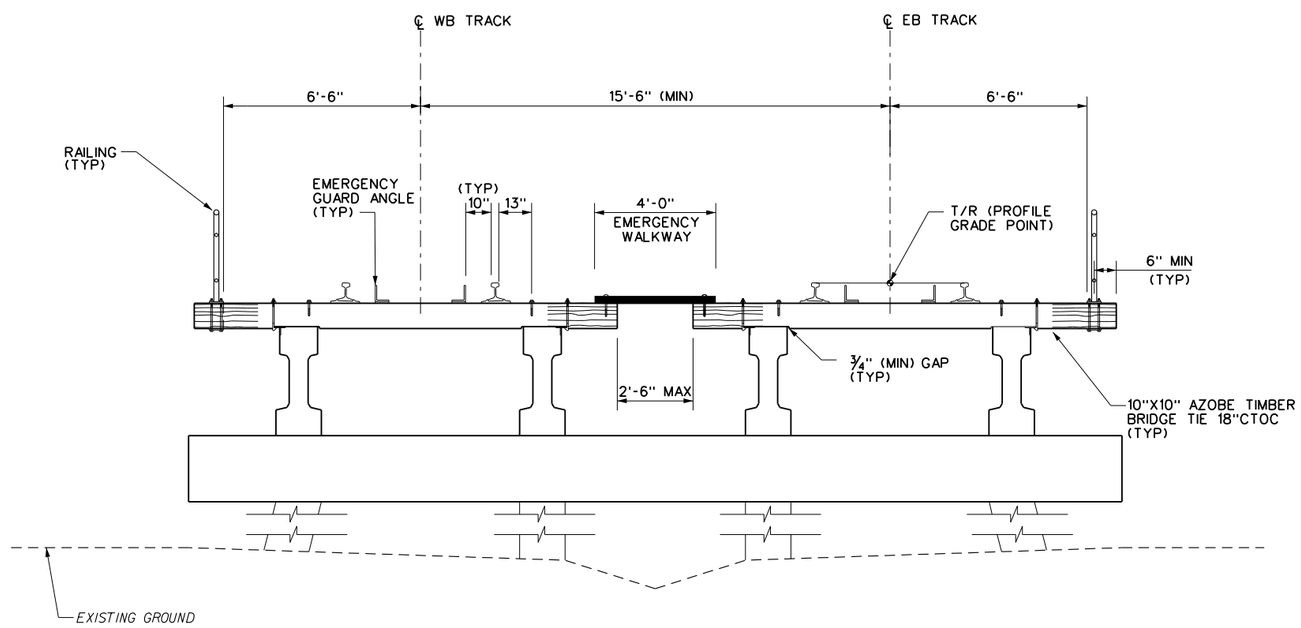

5 0 5 10
SCALE IN FEET

LRT OPEN DECK BRIDGE TYPICAL SECTION

CONTRACT NO.	DRAWING NO. VB-TK-0105	OF
LRT TYPICAL SECTIONS SHEET 5 OF 9		DRAFT

DESIGN SAB	DRWN SAB	CHCK KVL	APPR KVL
DATE	DATE	DATE	DATE

NO.	REVISION DESCRIPTION	BY	DATE

PLANS PREPARED BY: HDR

HAMPTON ROADS TRANSIT

VIRGINIA BEACH TRANSIT EXTENSION STUDY

9:35:30 PM

8/8/2013

c:\pwworking\pittld\0203957\S_VB-TK-0105.dgn

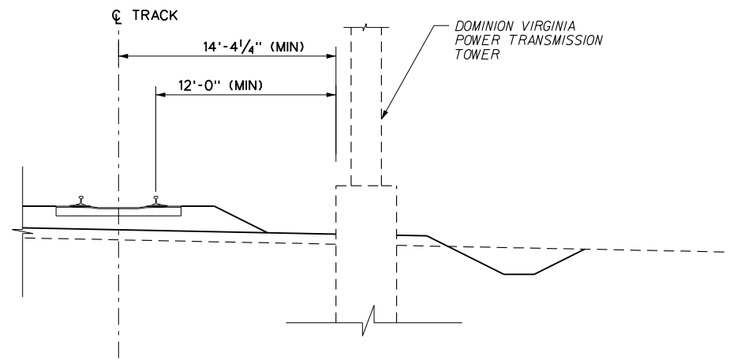

LRT TYPICAL SECTION
ADJACENT TO TRANSMISSION TOWER

DRAFT
NOT FOR CONSTRUCTION

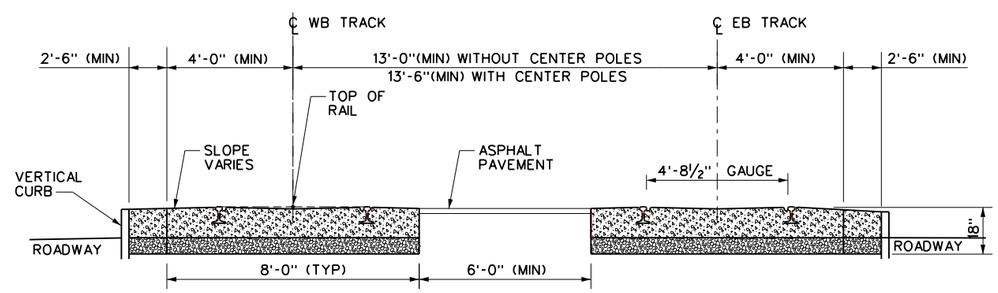

LRT CONCRETE EMBEDDED TANGENT TRACK TYPICAL SECTION

5 0 5 10
SCALE IN FEET

CONTRACT NO.
DRAWING NO. VB-TK-0106
OF

LRT TYPICAL SECTIONS
SHEET 6 OF 9

DRAFT

DESIGN SAB	DRWN SAB	CHCK KVL	APPR KVL
DATE	DATE	DATE	DATE

NO.	REVISION DESCRIPTION	BY	DATE

PLANS PREPARED BY:
HDR
HAMPTON ROADS TRANSIT

VIRGINIA BEACH TRANSIT
EXTENSION STUDY

9:35:56 PM
8/8/2013
c:\pwworking\pittld\0203957\S_VB-TK-0106.dgn

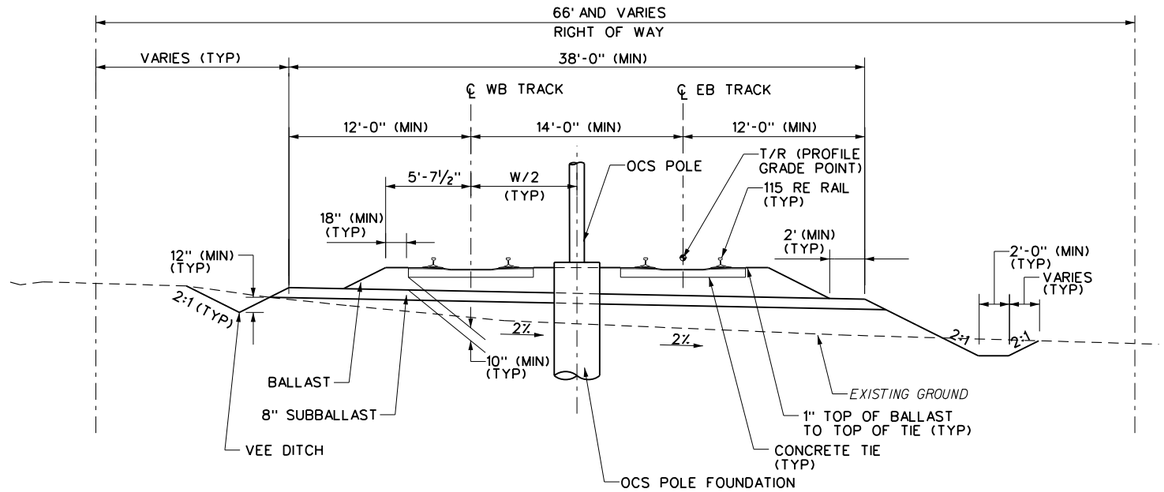

LRT TANGENT TYPICAL SECTION WITH CONTINUOUS SUBBALLAST SLOPE AND SWALE
(SUBBALLAST SLOPED TO THE RIGHT SHOWN)

DRAFT
NOT FOR CONSTRUCTION

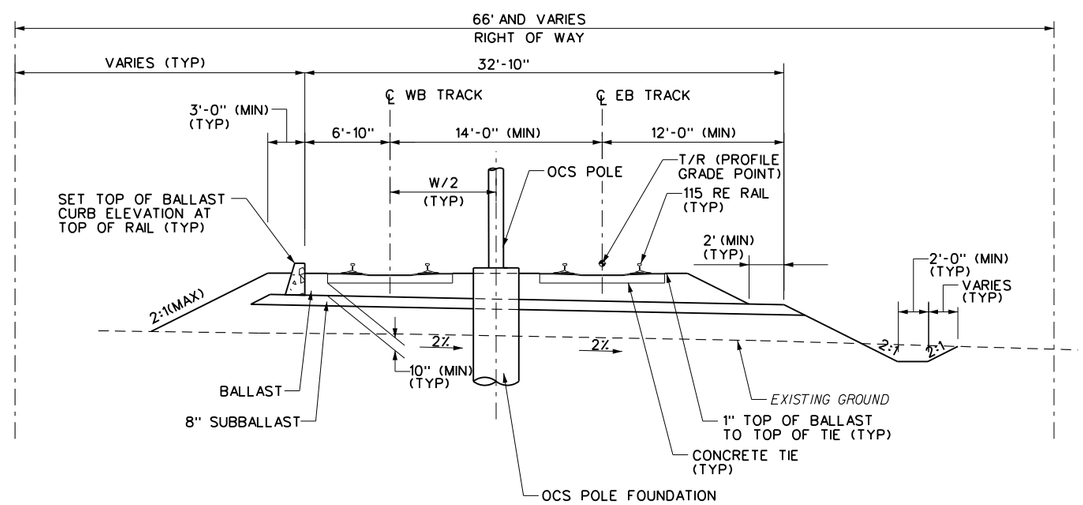

LRT TANGENT TYPICAL SECTION WITH CONTINUOUS SUBBALLAST SLOPE AND BALLAST CURB
(SUBBALLAST SLOPED TO THE RIGHT SHOWN)

5 0 5 10
SCALE IN FEET

CONTRACT NO.
DRAWING NO. VB-TK-0107
OF

LRT TYPICAL SECTIONS
SHEET 7 OF 9

DRAFT

NO.	REVISION DESCRIPTION	BY	DATE

	DESIGN	DRWN	CHCK	APPR
	SAB	SAB	KVL	KVL
	DATE	DATE	DATE	DATE

PLANS PREPARED BY:
HDR
HAMPTON ROADS TRANSIT

VIRGINIA BEACH TRANSIT
EXTENSION STUDY

9:36:26 PM
8/8/2013
c:\pwworking\pittld\0203957\S_VB-TK-0107.dgn

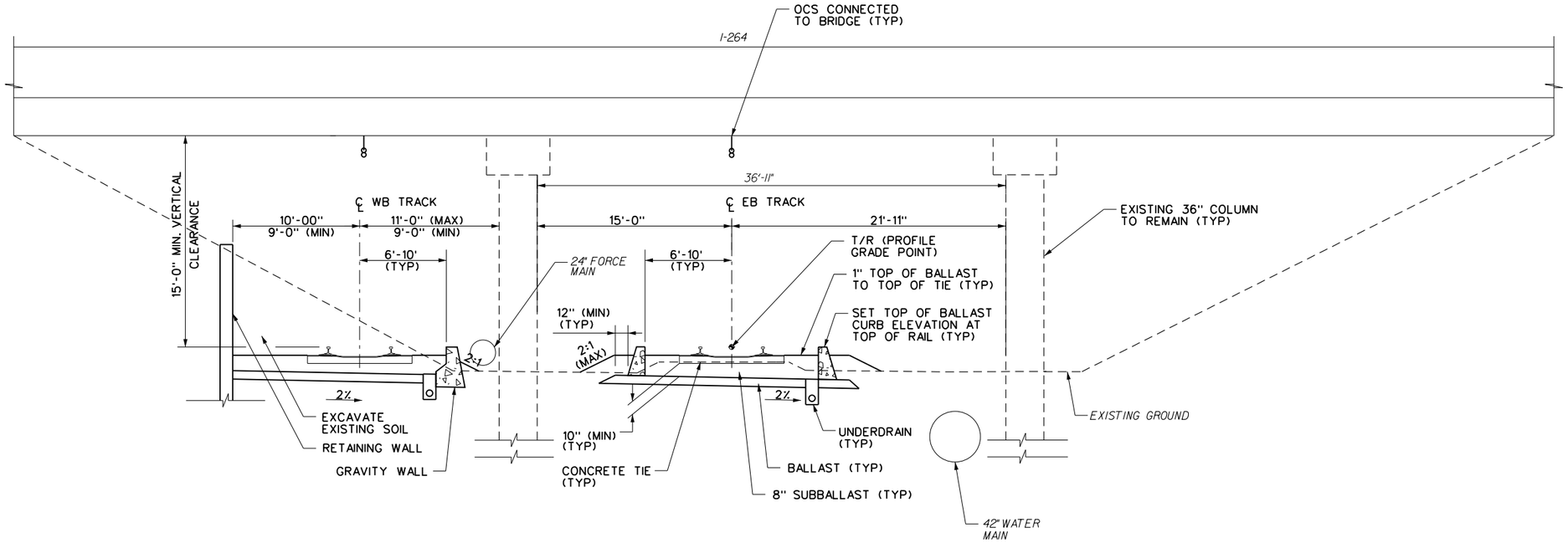

DRAFT
NOT FOR CONSTRUCTION

LRT TYPICAL SECTION AT I-264 OVERPASS NEAR WITCHDUCK RD

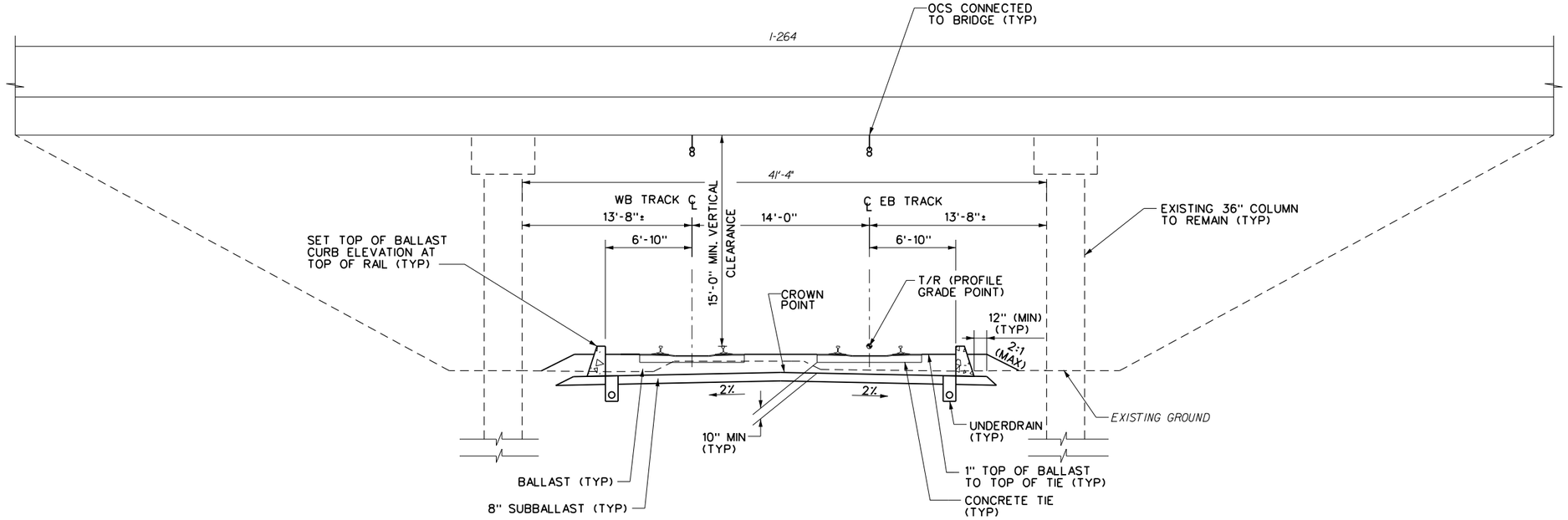

LRT TYPICAL SECTION AT I-264 OVERPASS NEAR LONDON BRIDGE RD

5 0 5 10
SCALE IN FEET

CONTRACT NO.
DRAWING NO. VB-TK-0108
OF

LRT TYPICAL SECTIONS
SHEET 8 OF 9

DRAFT

DESIGN SAB	DRWN SAB	CHCK KVL	APPR KVL
DATE	DATE	DATE	DATE

NO.	REVISION DESCRIPTION	BY	DATE

PLANS PREPARED BY:
HDR
HAMPTON ROADS TRANSIT

VIRGINIA BEACH TRANSIT EXTENSION STUDY

9:36:55 PM
8/8/2013
c:\pwworking\pittld\0203957\S_VB-TK-0108.dgn

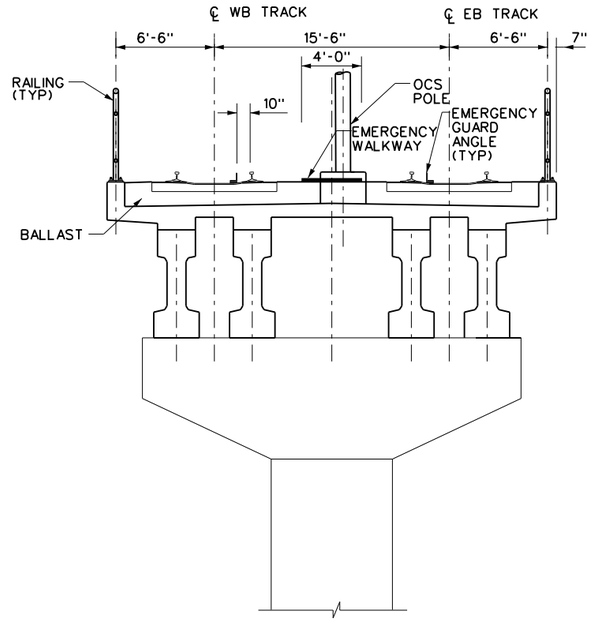

LRT TANGENT BALLAST DECK BRIDGE
TYPICAL SECTION

DRAFT
NOT FOR CONSTRUCTION

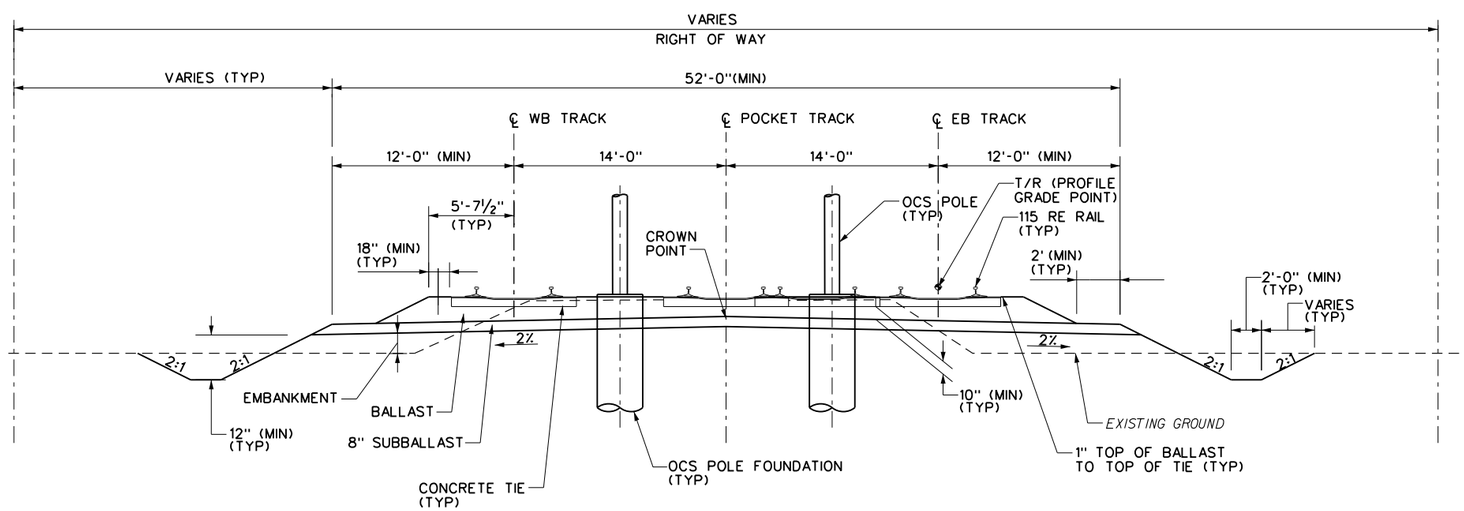

LRT TANGENT BALLASTED TRACK
TYPICAL SECTION WITH POCKET TRACK

5 0 5 10
SCALE IN FEET

CONTRACT NO.
DRAWING NO. VB-TK-0109
OF

LRT TYPICAL SECTIONS
SHEET 9 OF 9

DRAFT

DESIGN SAB	DRWN SAB	CHCK KVL	APPR KVL
DATE	DATE	DATE	DATE

NO.	REVISION DESCRIPTION	BY	DATE

PLANS PREPARED BY: HDR

HAMPTON ROADS TRANSIT

VIRGINIA BEACH TRANSIT EXTENSION STUDY

10:06:10 AM
8/15/2013
c:\pwworking\pittld\0203957\S_VB-TK-0109.dgn

12:13:30 PM

8/29/2013

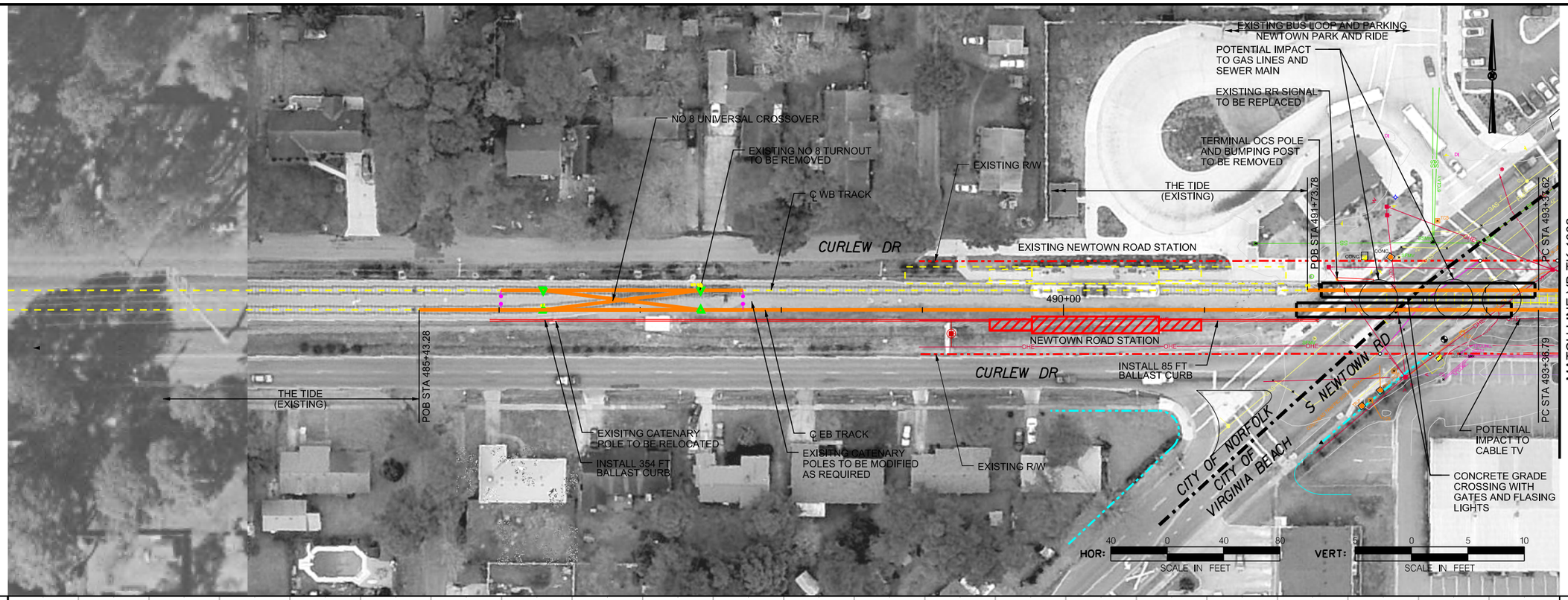

DRAFT
NOT FOR CONSTRUCTION

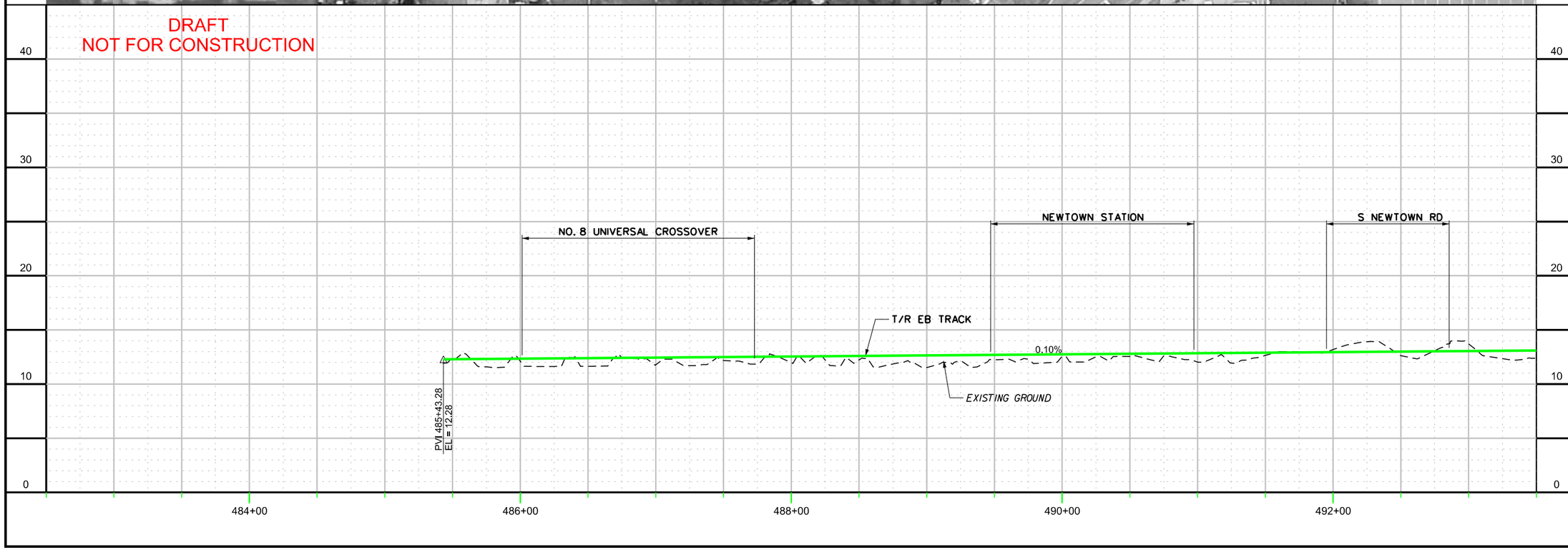

CONTRACT NO.	DRAWING NO.	OF
	VB-TK-1001	

TRACK PLAN / PROFILE
SHEET 1 OF 52

DRAFT

APPR	DATE
SAB DESIGN	DATE
SAB DRAWN	DATE
CKCK KVL	DATE

NO.	REVISION DESCRIPTION	BY	DATE

PLANS PREPARED BY:
HDR
HAMPTON ROADS TRANSIT

VIRGINIA BEACH TRANSIT EXTENSION STUDY

c:\pwworking\pitt\d0203957\S_VB-TK-1001.dgn

12:16:25 PM

8/29/2013

c:\pwworking\pitt\d0203957\S_VB-TK-1002.dgn

CURVE NO.	R	Ls in	Lc	Ls out	Ea	Eu	SPEED
WB101	10000'	0	115.09'	0	0.00"	1.20"	55
WB102	10000'	0	65.37'	0	0.00"	1.20"	55

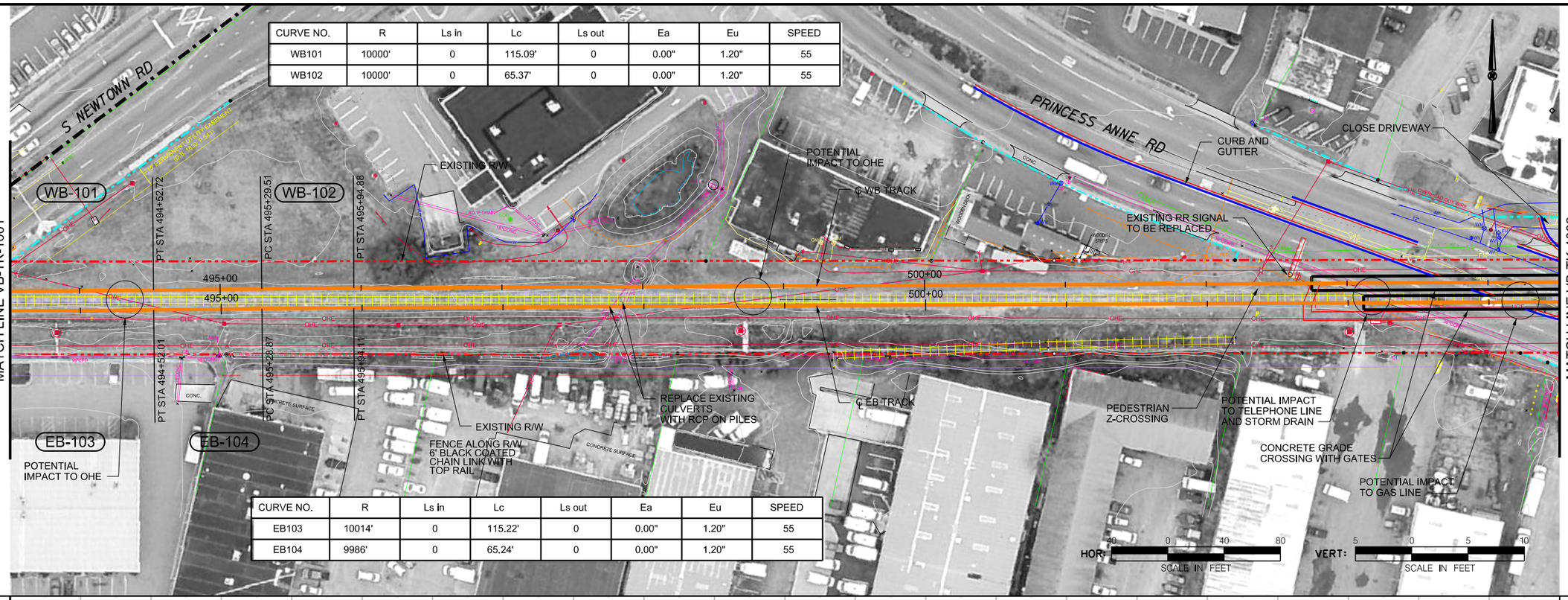

CURVE NO.	R	Ls in	Lc	Ls out	Ea	Eu	SPEED
EB103	10014'	0	115.22'	0	0.00"	1.20"	55
EB104	9986'	0	65.24'	0	0.00"	1.20"	55

CONTRACT NO.

DRAWING NO. VB-TK-1002

OF

TRACK PLAN / PROFILE
SHEET 2 OF 52

DRAFT

APPR	DESIGN	DRAWN	CKCK	DATE
	SAB	SAB	KVL	

NO.	REVISION DESCRIPTION	BY	DATE

PLANS PREPARED BY:

HDR

HAMPTON ROADS TRANSIT

VIRGINIA BEACH TRANSIT EXTENSION STUDY

12:17:58 PM

8/29/2013

CURVE NO.	R	Ls in	Lc	Ls out	Ea	Eu	SPEED
WB103	11014'	0	106.06'	0	0.00"	1.09"	55
WB104	25250'	0	164.95	0	0.00"	0.47"	55

CURVE NO.	R	Ls in	Lc	Ls out	Ea	Eu	SPEED
EB105	11000'	0	105.93'	0	0.00"	1.09"	55
EB106	25264'	0	165.05'	0	0.00"	0.47"	55

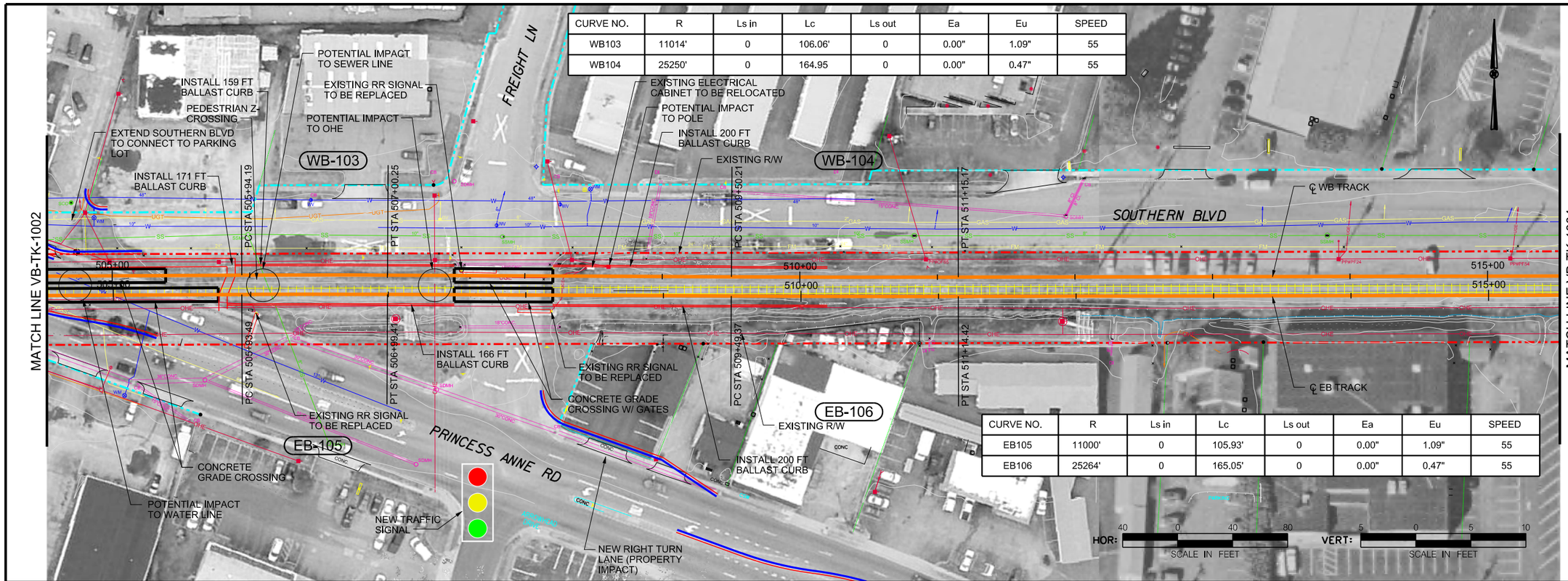

DRAFT
NOT FOR CONSTRUCTION

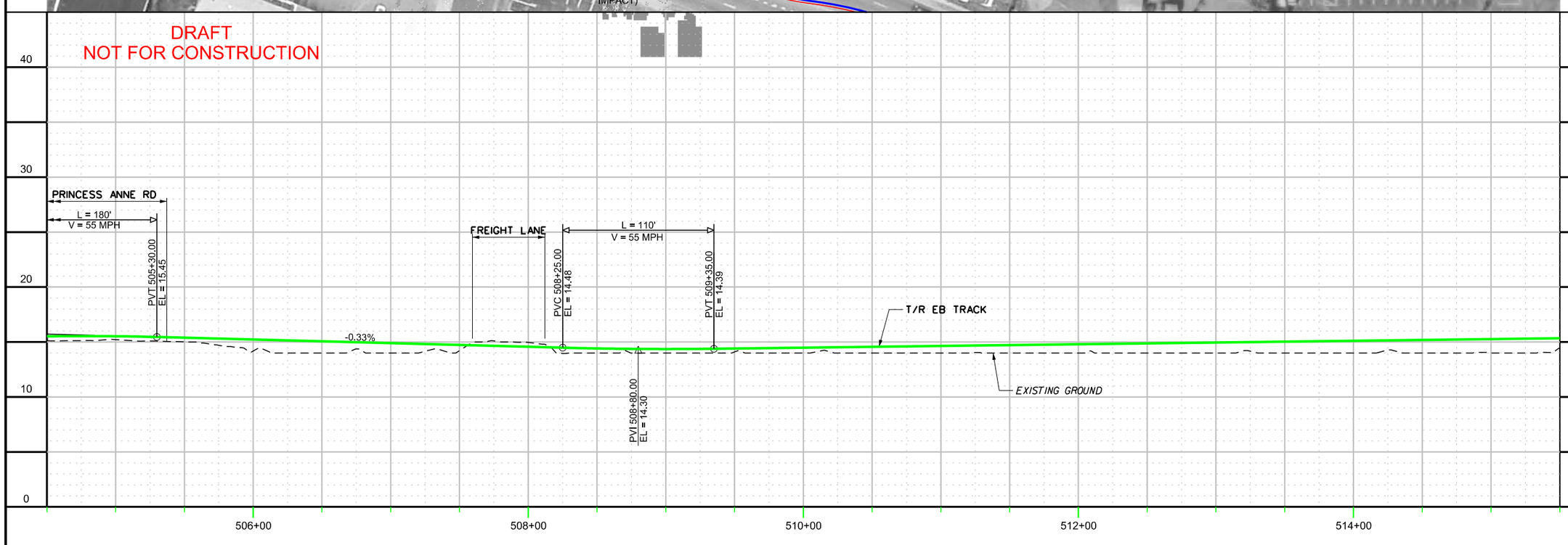

CONTRACT NO.

DRAWING NO. VB-TK-1003

OF

TRACK PLAN / PROFILE
SHEET 3 OF 52

DRAFT

APPR.	DATE
DESIGN SAB	DATE
DRWN SAB	DATE
CKCK KVL	DATE

NO.	REVISION DESCRIPTION	BY	DATE

PLANS PREPARED BY: HDR

HAMPTON ROADS TRANSIT

VIRGINIA BEACH TRANSIT EXTENSION STUDY

c:\pwworking\pitt\d0203957\S_VB-TK-1003.dgn

12:19:26 PM

8/29/2013

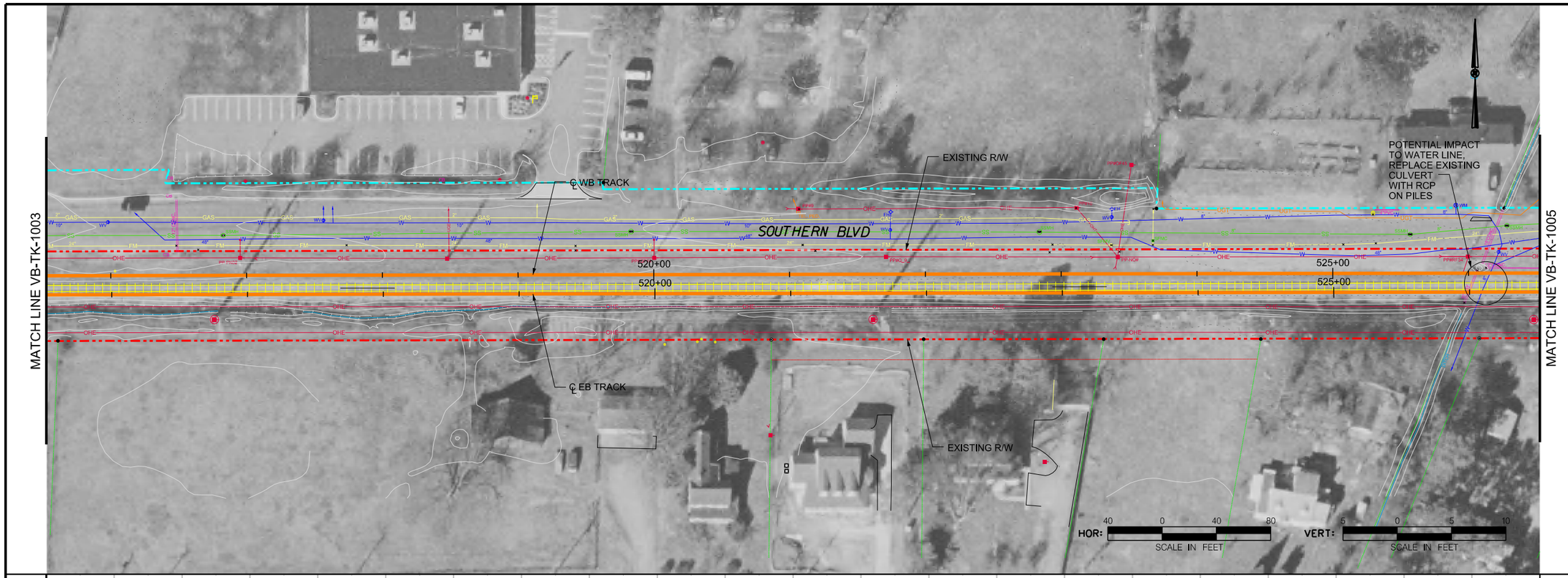

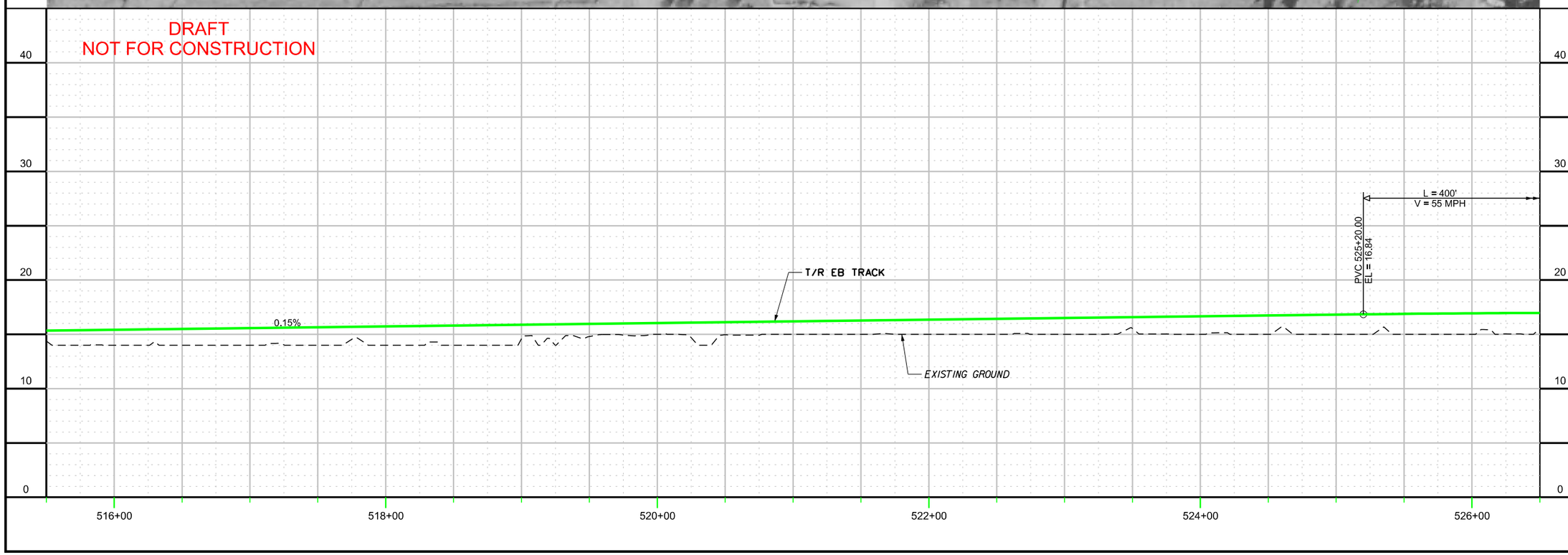

CONTRACT NO.

DRAWING NO. VB-TK-1004

OF

TRACK PLAN / PROFILE
SHEET 4 OF 52

DRAFT

APPR	DATE
KVL	DATE
CKCK	DATE
SAB	DATE
SAB	DESIGN
DRWN	

NO.	REVISION DESCRIPTION	BY	DATE

PLANS PREPARED BY:

HDR

HAMPTON ROADS TRANSIT

VIRGINIA BEACH TRANSIT EXTENSION STUDY

c:\pwworking\pitt\d0203957\S_VB-TK-1004.dgn

12:20:55 PM

8/29/2013

CURVE NO.	R	Ls In	Lc	Ls out	Ea	Eu	SPEED
WB105	17000'	0	105.95'	0	0.00"	0.70"	55
WB107	10014'	0	305.06	0	0.00"	1.20"	55

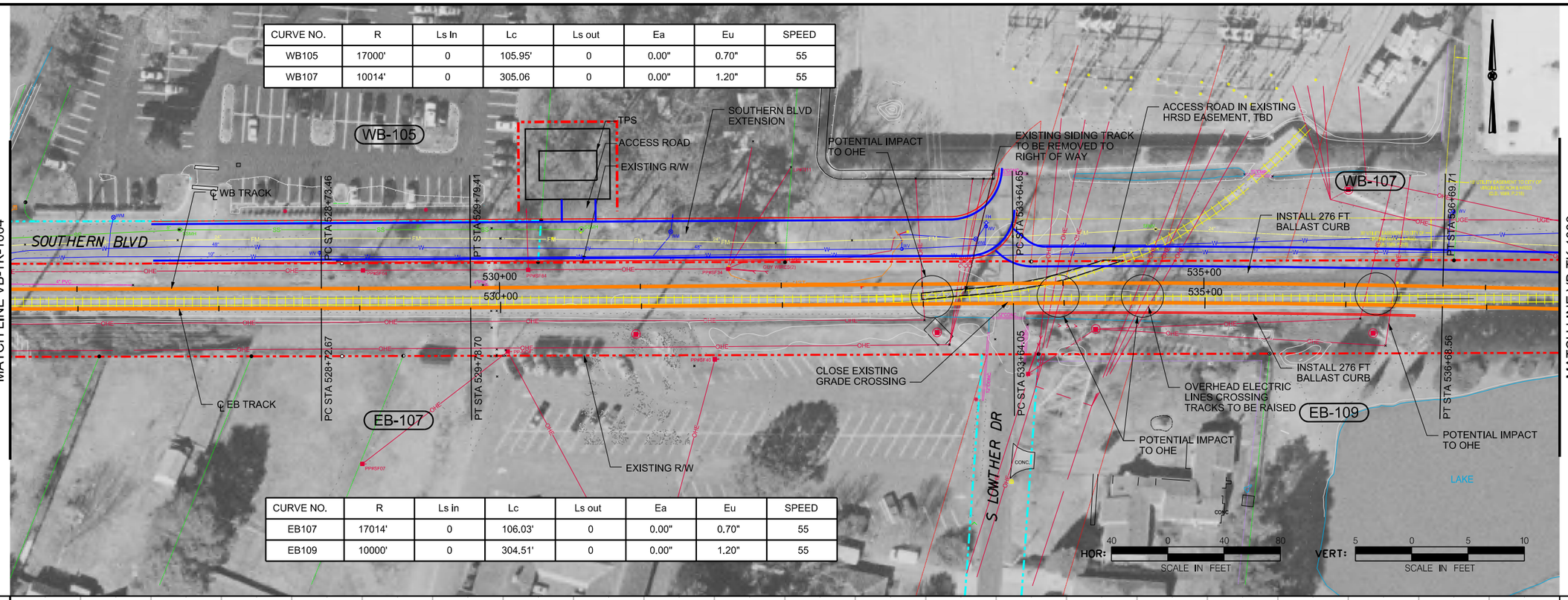

CURVE NO.	R	Ls in	Lc	Ls out	Ea	Eu	SPEED
EB107	17014'	0	106.03'	0	0.00"	0.70"	55
EB109	10000'	0	304.51'	0	0.00"	1.20"	55

CONTRACT NO.

DRAWING NO. VB-TK-1005

OF

TRACK PLAN / PROFILE
SHEET 5 OF 52

DRAFT

DESIGN SAB	DRAWN SAB	CHCK KVL	APPR
DATE	DATE	DATE	DATE

NO.	REVISION DESCRIPTION	BY	DATE

PLANS PREPARED BY: HDR

HAMPTON ROADS TRANSIT

VIRGINIA BEACH TRANSIT EXTENSION STUDY

c:\pwworking\pitt\d0203957\S_VB-TK-1005.dgn

12:22:25 PM

8/29/2013

CURVE NO.	R	Ls in	Lc	Ls out	Ea	Eu	SPEED
WB108	10000'	0	253.89'	0	0.00"	1.20"	55

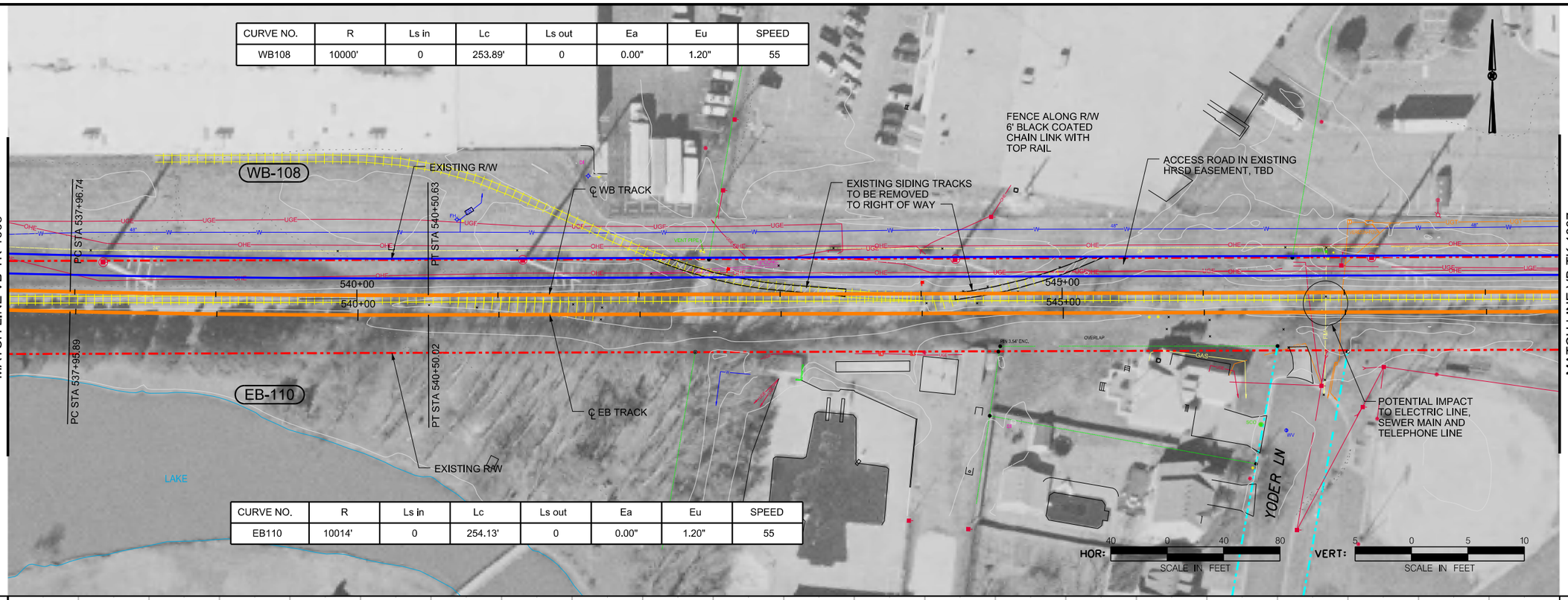

CURVE NO.	R	Ls in	Lc	Ls out	Ea	Eu	SPEED
EB110	10014'	0	254.13'	0	0.00"	1.20"	55

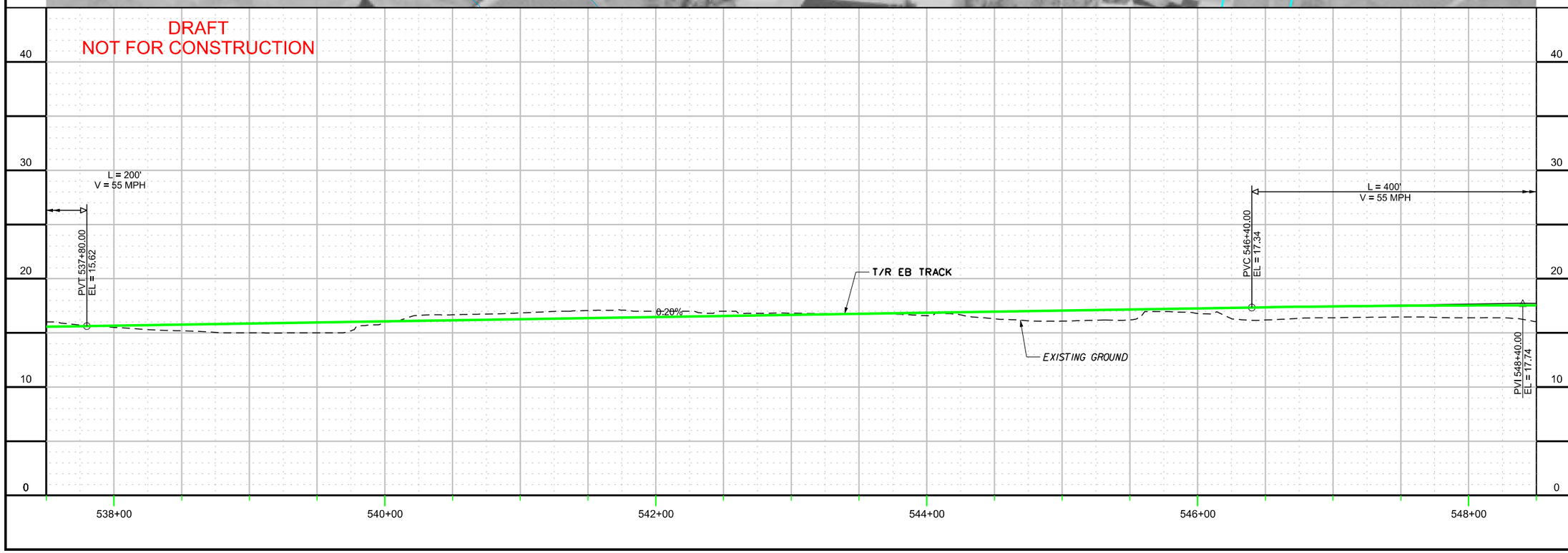

CONTRACT NO.

DRAWING NO. VB-TK-1006

OF

TRACK PLAN / PROFILE
SHEET 6 OF 52

DRAFT

DESIGN SAB	DRAWN SAB	CHCK KVL	APPR
DATE	DATE	DATE	DATE

NO.	REVISION DESCRIPTION	BY	DATE

PLANS PREPARED BY: HDR

HAMPTON ROADS TRANSIT

VIRGINIA BEACH TRANSIT EXTENSION STUDY

c:\pwworking\pitt\d0203957\S_VB-TK-1006.dgn

12:23:54 PM

8/29/2013

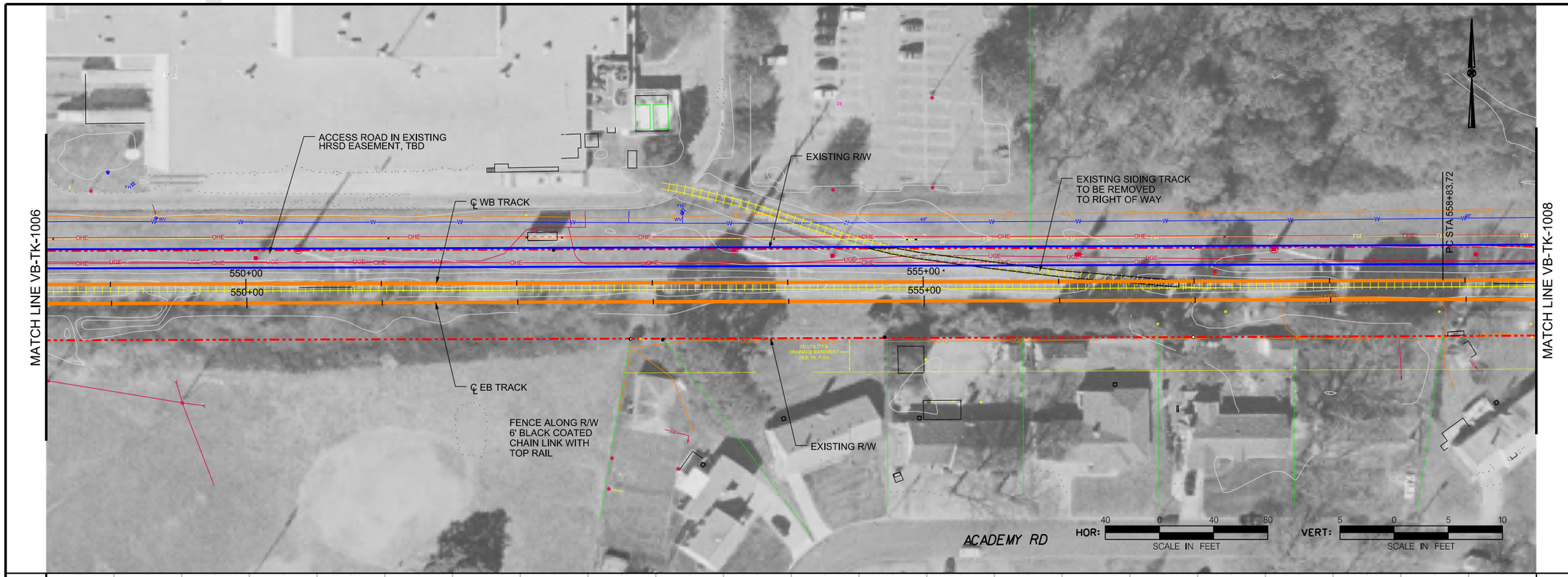

DRAFT
NOT FOR CONSTRUCTION

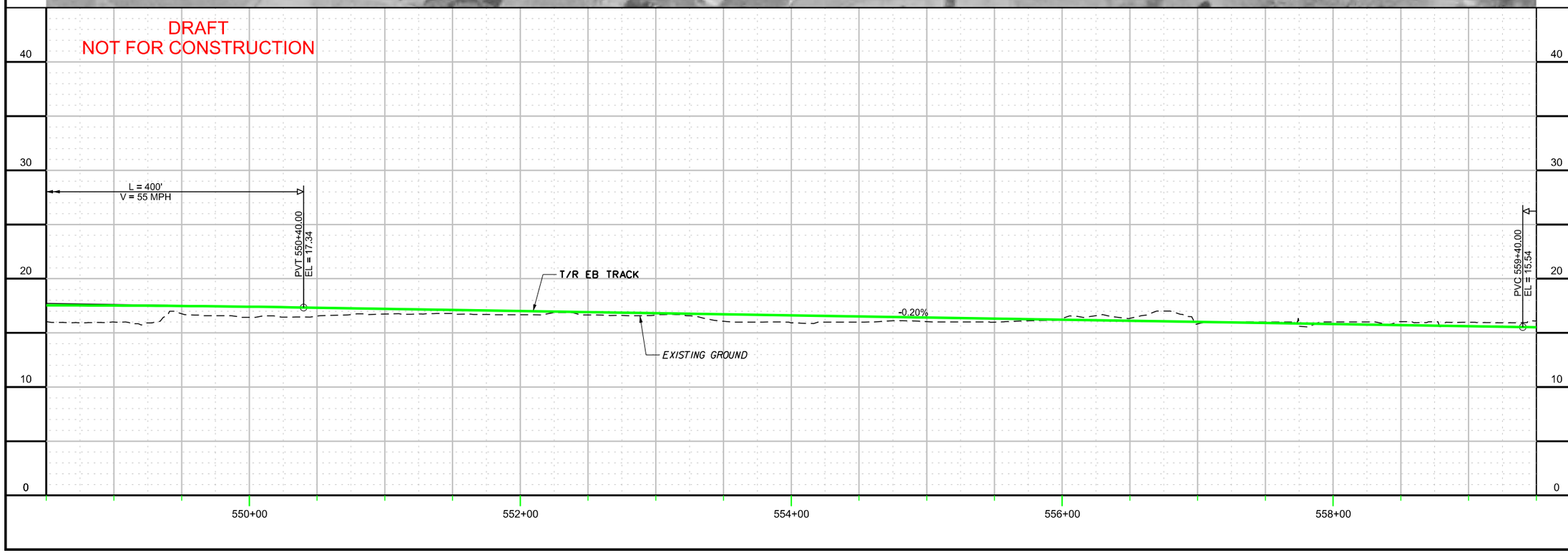

CONTRACT NO.

DRAWING NO. VB-TK-1007

OF

TRACK PLAN / PROFILE
SHEET 7 OF 52

DRAFT

APPR.	DATE	DESIGN	SAB	DATE
CKCK	KVL	DRWN	SAB	DATE

NO.	REVISION DESCRIPTION	BY	DATE

PLANS PREPARED BY:
HDR
HAMPTON ROADS TRANSIT

VIRGINIA BEACH TRANSIT EXTENSION STUDY

c:\pwworking\pitt\d0203957\S_VB-TK-1007.dgn

12:25:26 PM

8/29/2013

c:\pwworking\pitt\d0203957\S_VB-TK-1008.dgn

CURVE NO.	R	Ls in	Lc	Ls out	Ea	Eu	SPEED
WB109	10000'	0	428.84'	0	0.00"	1.20"	55
WB110	10000'	0	410.02'	0	0.00"	1.20"	55

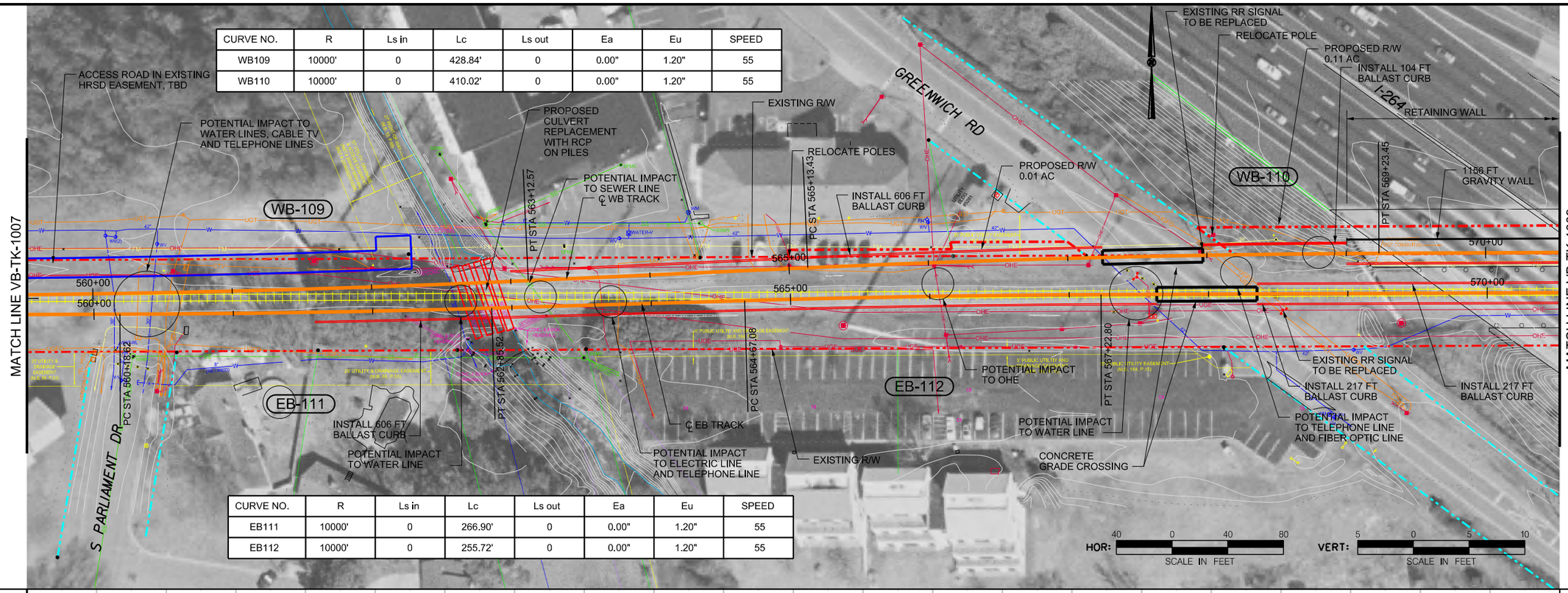

CURVE NO.	R	Ls in	Lc	Ls out	Ea	Eu	SPEED
EB111	10000'	0	266.90'	0	0.00"	1.20"	55
EB112	10000'	0	255.72'	0	0.00"	1.20"	55

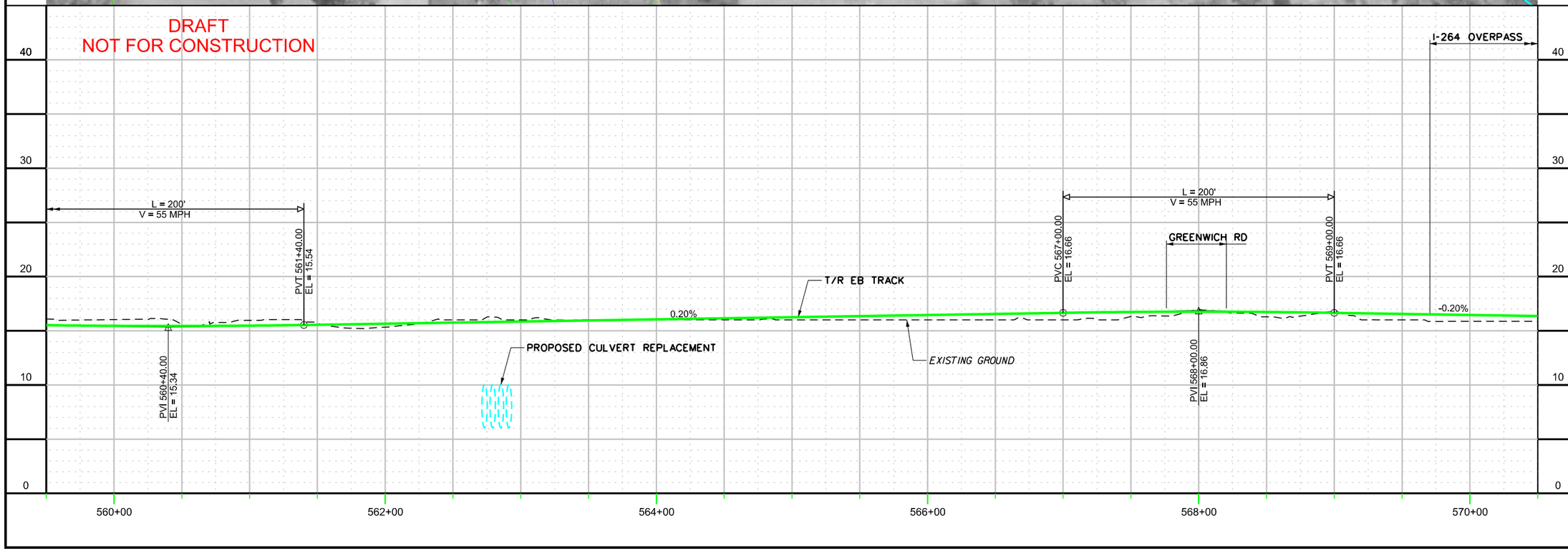

CONTRACT NO.

DRAWING NO. VB-TK-1008

OF

TRACK PLAN / PROFILE
SHEET 8 OF 52

DRAFT

APPR	DATE
SAB DESIGN	DATE
SAB DRAWN	DATE
CKCK KVL	DATE

NO.	REVISION DESCRIPTION	BY	DATE

PLANS PREPARED BY:

HDR

HAMPTON ROADS TRANSIT

VIRGINIA BEACH TRANSIT EXTENSION STUDY

12:26:53 PM

8/29/2013

c:\pwworking\pitt\d0203957\S_VB-TK-1009.dgn

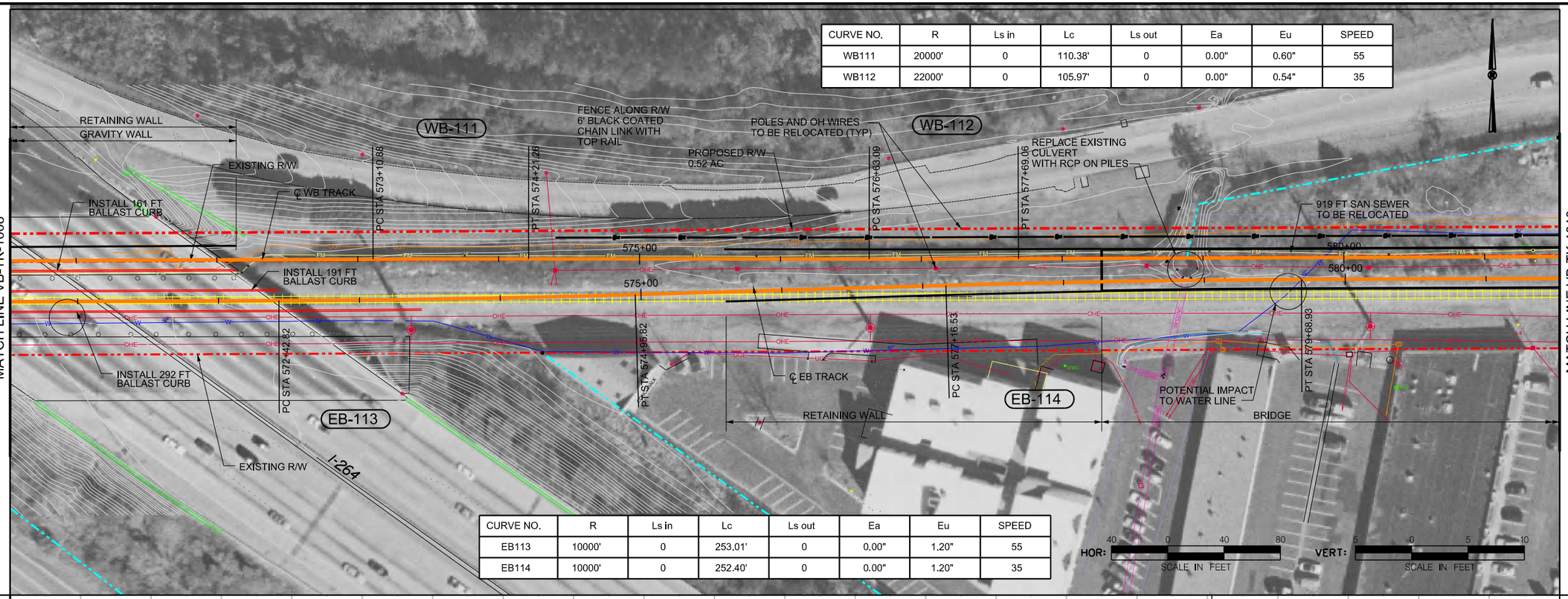

CURVE NO.	R	Ls in	Lc	Ls out	Ea	Eu	SPEED
WB111	20000'	0	110.38'	0	0.00"	0.60"	55
WB112	22000'	0	105.97'	0	0.00"	0.54"	35

CURVE NO.	R	Ls in	Lc	Ls out	Ea	Eu	SPEED
EB113	10000'	0	253.01'	0	0.00"	1.20"	55
EB114	10000'	0	252.40'	0	0.00"	1.20"	35

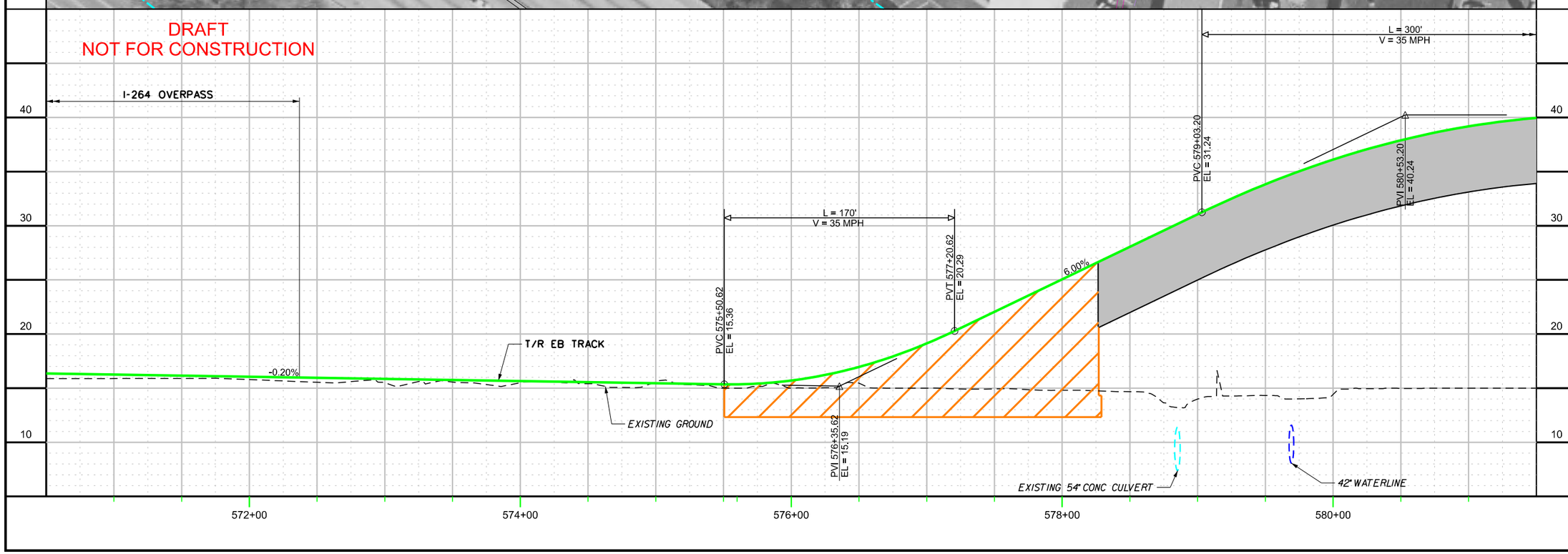

CONTRACT NO.

DRAWING NO. VB-TK-1009

OF

TRACK PLAN / PROFILE
SHEET 9 OF 52

DRAFT

APPR.	CKCK.	DRWN.	DESIGN
SAB	KVL	SAB	SAB
DATE	DATE	DATE	DATE

NO.	REVISION DESCRIPTION	BY	DATE

PLANS PREPARED BY:

HDR

HAMPTON ROADS TRANSIT

VIRGINIA BEACH TRANSIT EXTENSION STUDY

12:28:25 PM

8/29/2013

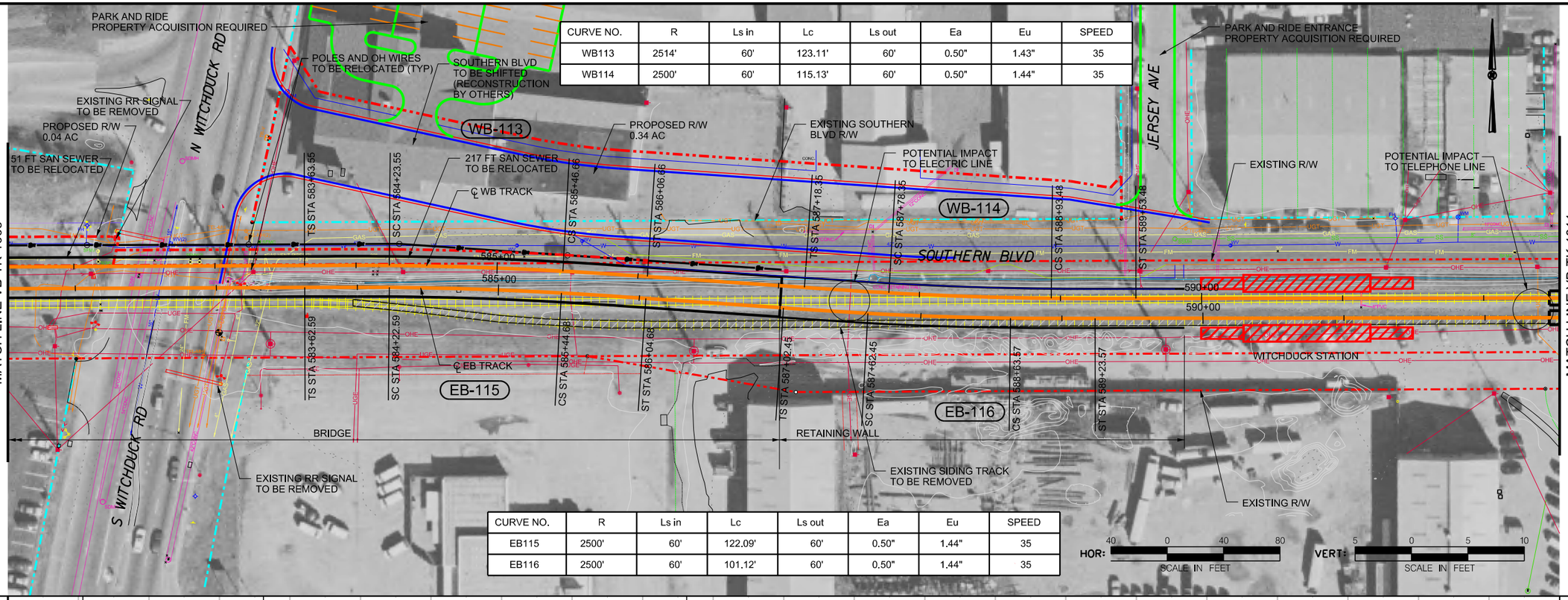

CURVE NO.	R	Ls in	Lc	Ls out	Ea	Eu	SPEED
WB113	2514'	60'	123.11'	60'	0.50"	1.43"	35
WB114	2500'	60'	115.13'	60'	0.50"	1.44"	35

CURVE NO.	R	Ls in	Lc	Ls out	Ea	Eu	SPEED
EB115	2500'	60'	122.09'	60'	0.50"	1.44"	35
EB116	2500'	60'	101.12'	60'	0.50"	1.44"	35

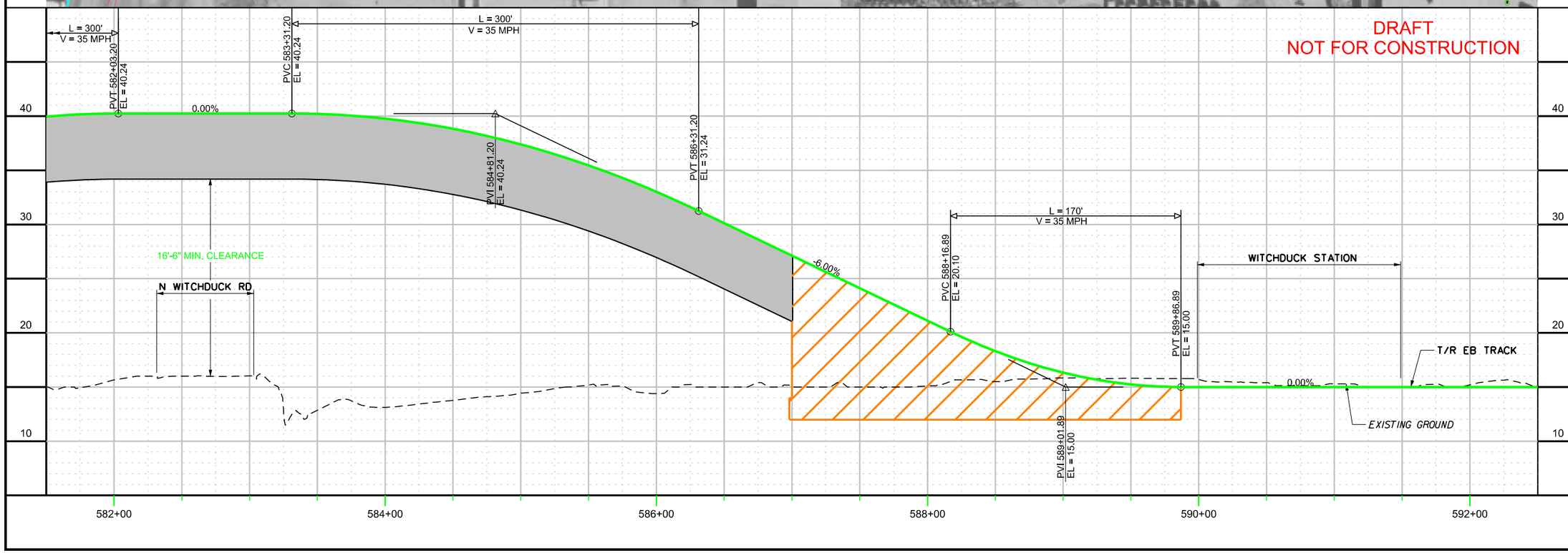

CONTRACT NO.

DRAWING NO. VB-TK-1010

OF

TRACK PLAN / PROFILE
SHEET 10 OF 52

DRAFT

APPR.	DATE	DESIGN	SAB	DATE
CKCK	KVL	DRWN	SAB	DATE

NO.	REVISION DESCRIPTION	BY	DATE

PLANS PREPARED BY:

HDR

HAMPTON ROADS TRANSIT

VIRGINIA BEACH TRANSIT
EXTENSION STUDY

c:\pwworking\pitt\d0203957\S_VB-TK-1010.dgn

4:13:26 PM

8/29/2013

CURVE NO.	R	Ls in	Lc	Ls out	Ea	Eu	SPEED
WB115	10000'	0	102.10'	0	0.00"	1.20"	55

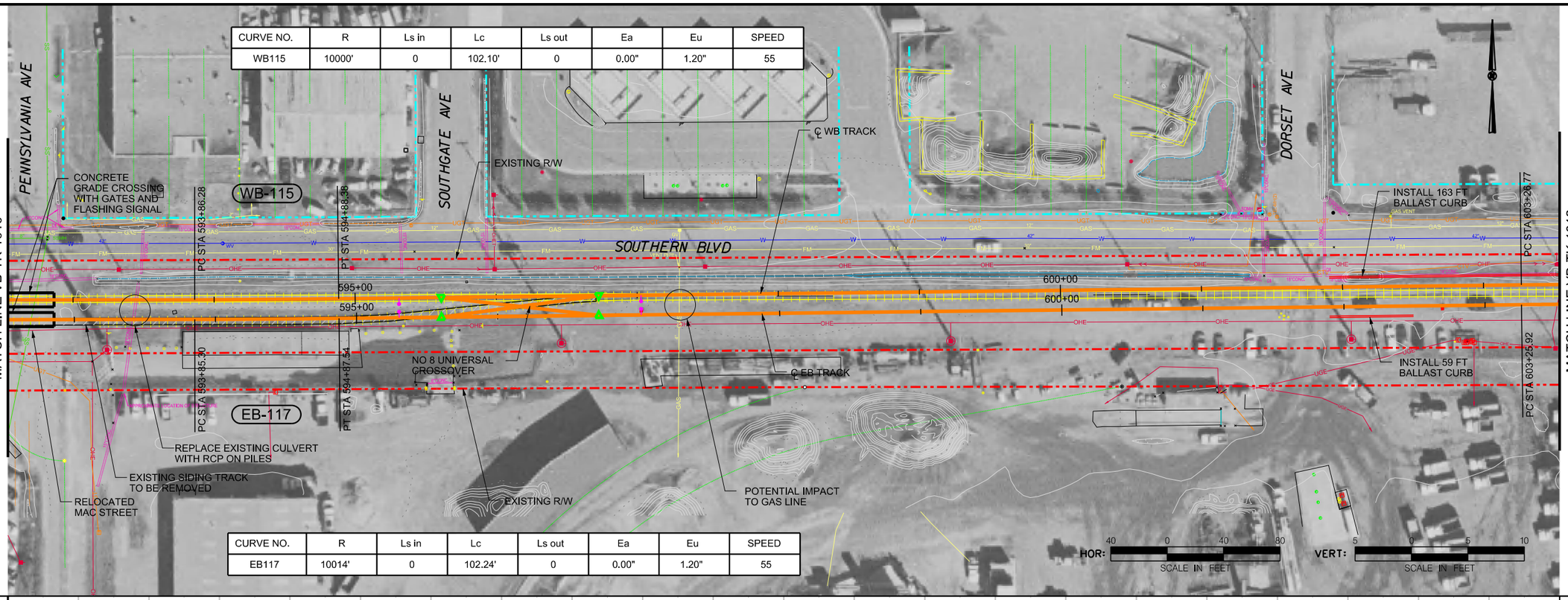

CURVE NO.	R	Ls in	Lc	Ls out	Ea	Eu	SPEED
EB117	10014'	0	102.24'	0	0.00"	1.20"	55

DRAFT
NOT FOR CONSTRUCTION

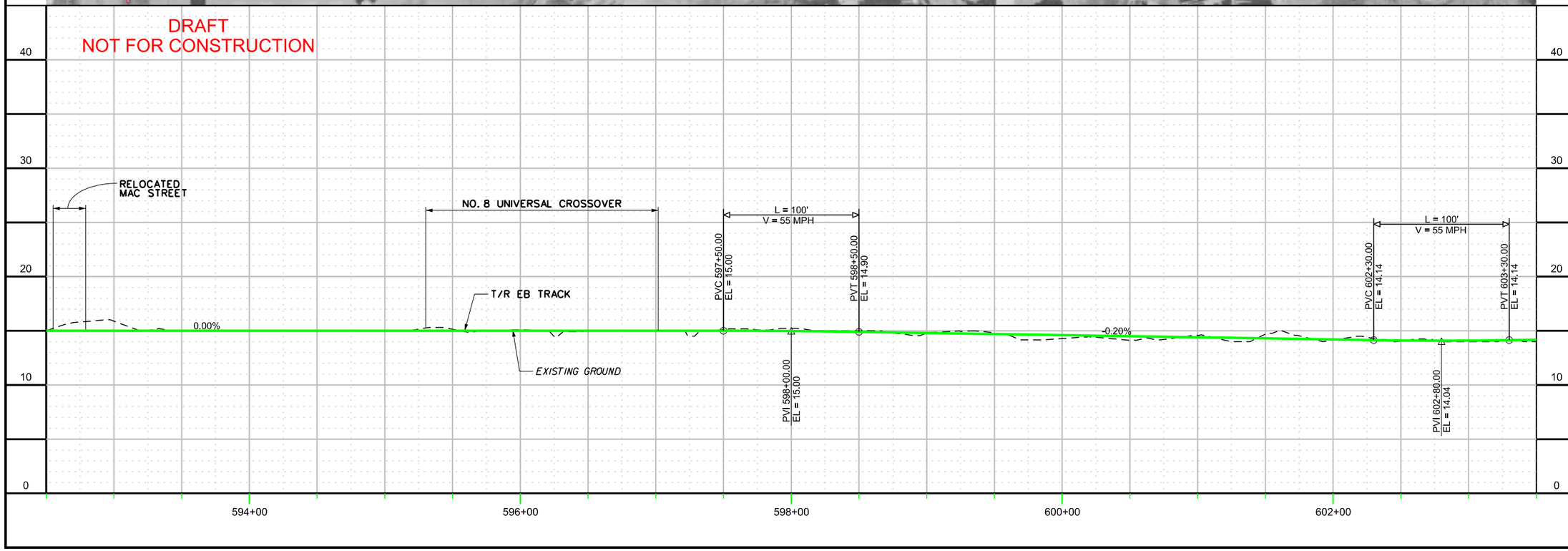

NO.	REVISION DESCRIPTION	BY	DATE

APPR.	CKCK	DRWN	DESIGN
DATE	KVL	SAB	SAB
DATE	DATE	DATE	

CONTRACT NO.

DRAWING NO. VB-TK-1011

OF

TRACK PLAN / PROFILE
SHEET 11 OF 52

DRAFT

PLANS PREPARED BY: HDR

HAMPTON ROADS TRANSIT

VIRGINIA BEACH TRANSIT EXTENSION STUDY

c:\pwworking\pitt\d0203957\S_VB-TK-1011.dgn

4:14:55 PM

8/29/2013

CURVE NO.	R	Ls In	Lc	Ls out	Ea	Eu	SPEED
WB116	30014'	0	172.06'	0	0.00"	0.40"	55

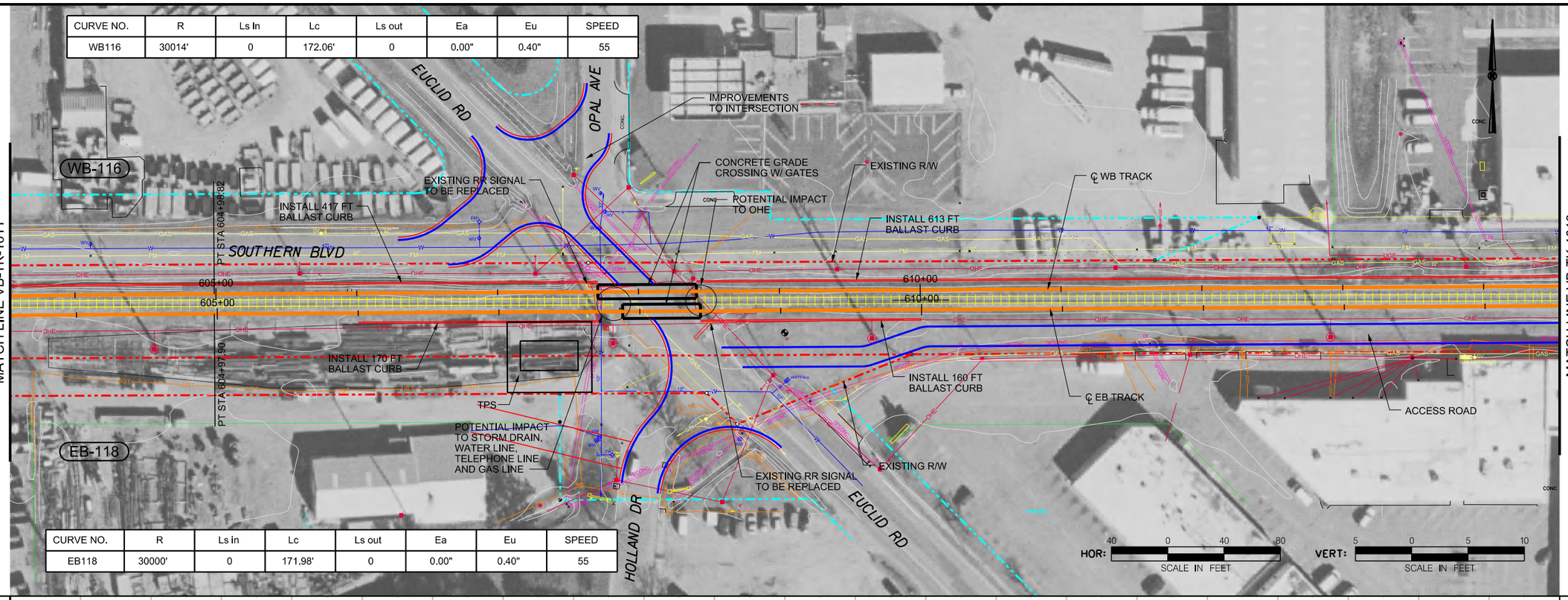

CURVE NO.	R	Ls in	Lc	Ls out	Ea	Eu	SPEED
EB118	30000'	0	171.98'	0	0.00"	0.40"	55

DRAFT
NOT FOR CONSTRUCTION

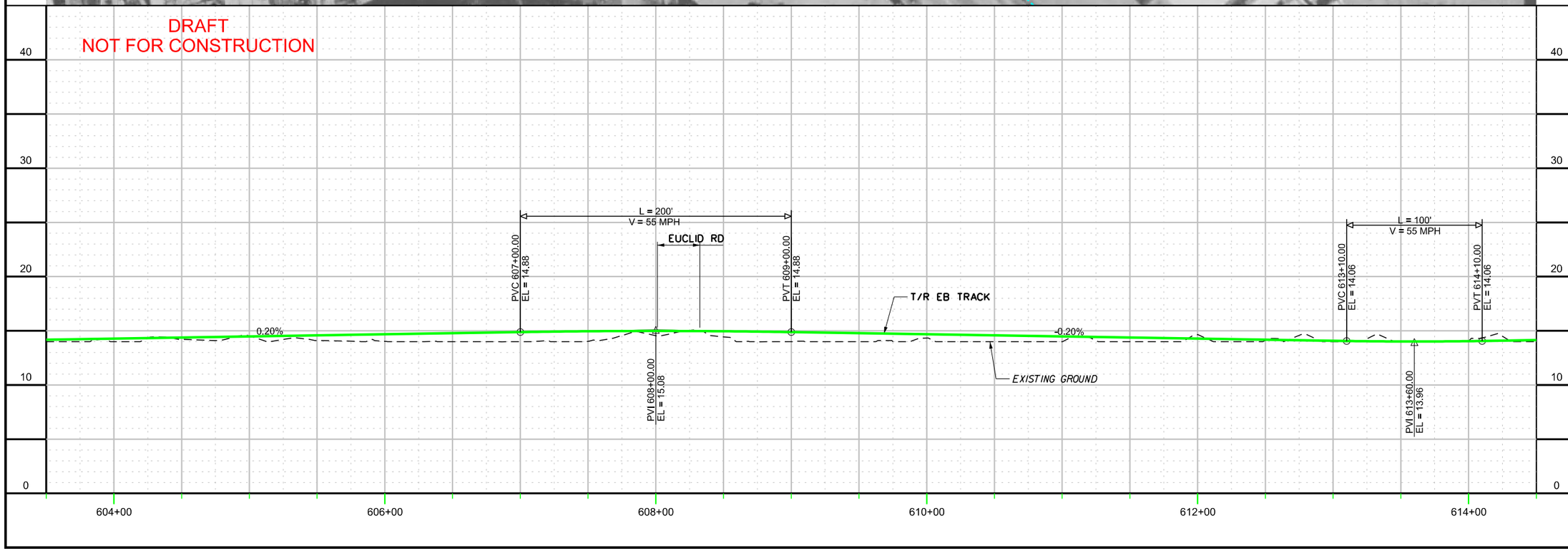

CONTRACT NO.

DRAWING NO. VB-TK-1012

OF

TRACK PLAN / PROFILE
SHEET 12 OF 52

DRAFT

DESIGN	SAB	DATE	
DRWN	SAB	DATE	
CKCK	KVL	DATE	
APPR		DATE	

NO.	REVISION DESCRIPTION	BY	DATE

PLANS PREPARED BY:
HDR
HAMPTON ROADS TRANSIT

VIRGINIA BEACH TRANSIT EXTENSION STUDY

c:\pwworking\pitt\d0203957\S_VB-TK-1012.dgn

4:16:22 PM

8/29/2013

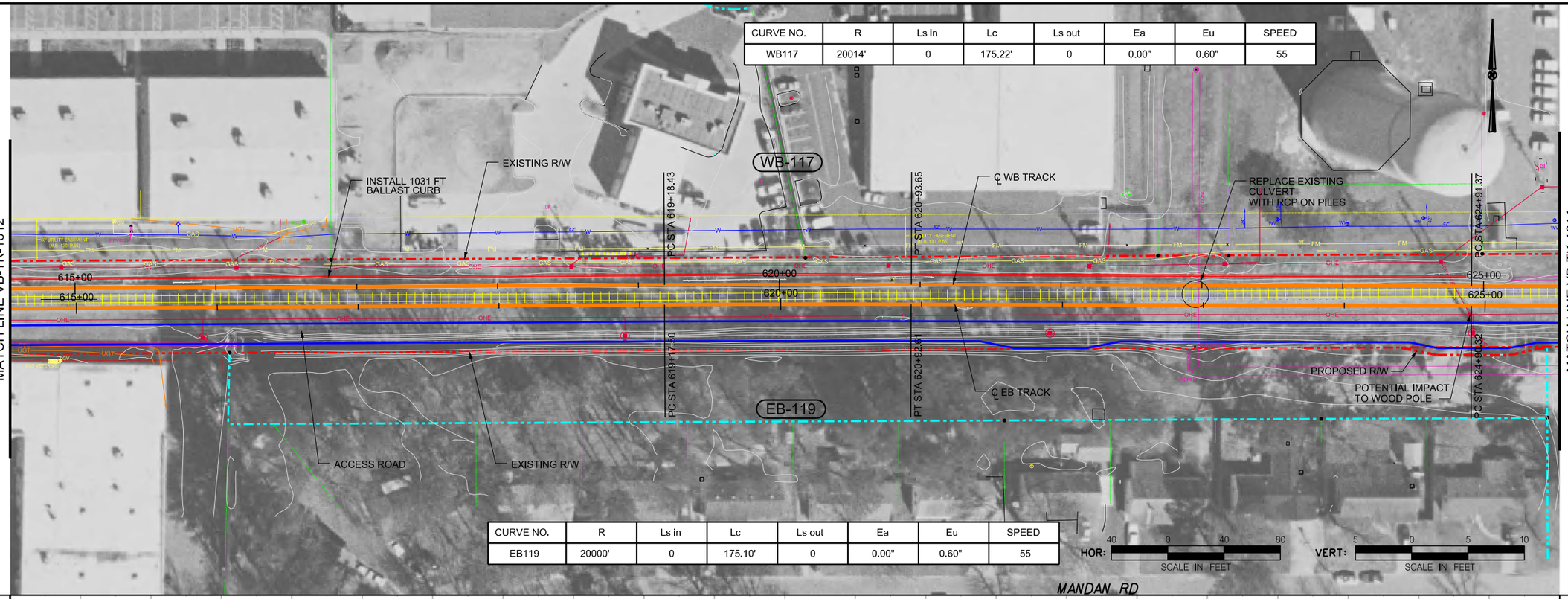

CURVE NO.	R	Ls in	Lc	Ls out	Ea	Eu	SPEED
WB117	20014'	0	175.22'	0	0.00"	0.60"	55

CURVE NO.	R	Ls in	Lc	Ls out	Ea	Eu	SPEED
EB119	20000'	0	175.10'	0	0.00"	0.60"	55

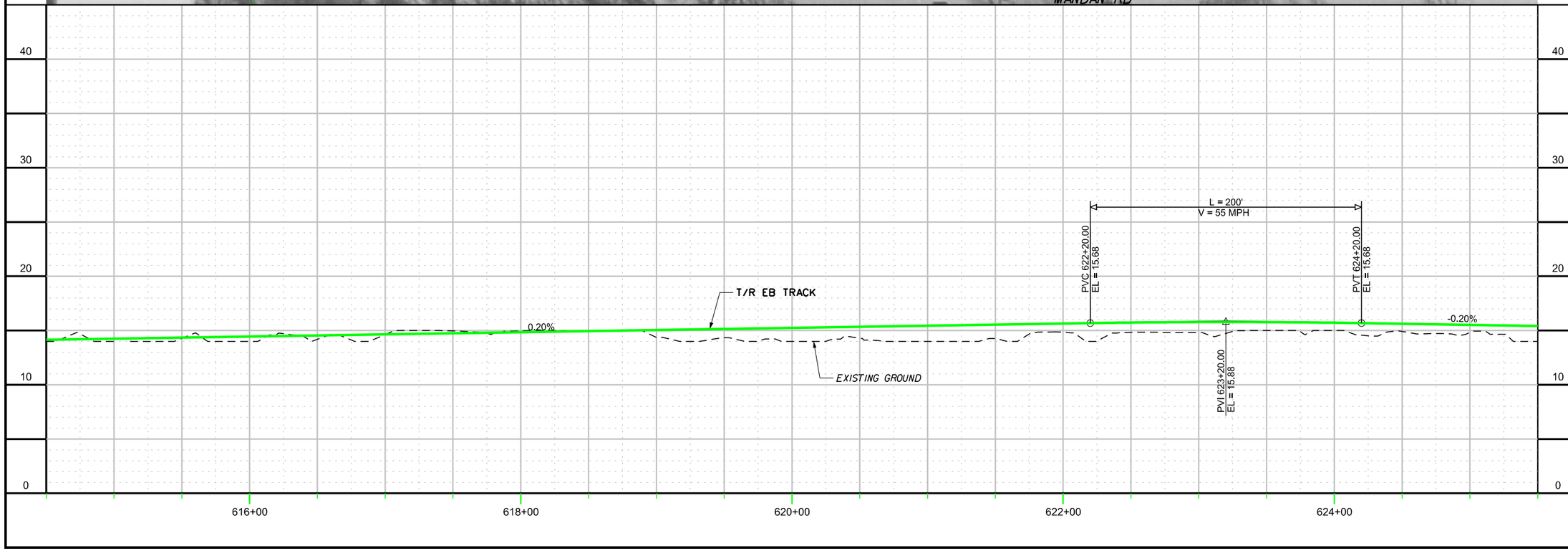

CONTRACT NO.

DRAWING NO. VB-TK-1013

OF

TRACK PLAN / PROFILE
SHEET 13 OF 52

DRAFT

DESIGN	SAB	DATE	
DRWN	SAB	DATE	
CKCK	KVL	DATE	
APPR		DATE	

NO.	REVISION DESCRIPTION	BY	DATE

PLANS PREPARED BY:

HDR

HAMPTON ROADS TRANSIT

VIRGINIA BEACH TRANSIT EXTENSION STUDY

c:\pwworking\pitt\d0203957\S_VB-TK-1013.dgn

4:17:46 PM

8/29/2013

CURVE NO.	R	Ls in	Lc	Ls out	Ea	Eu	SPEED
WB118	15000'	0	170.24'	0	0.00"	0.80"	55
WB119	12500'	0	67.60'	0	0.00"	0.96"	55

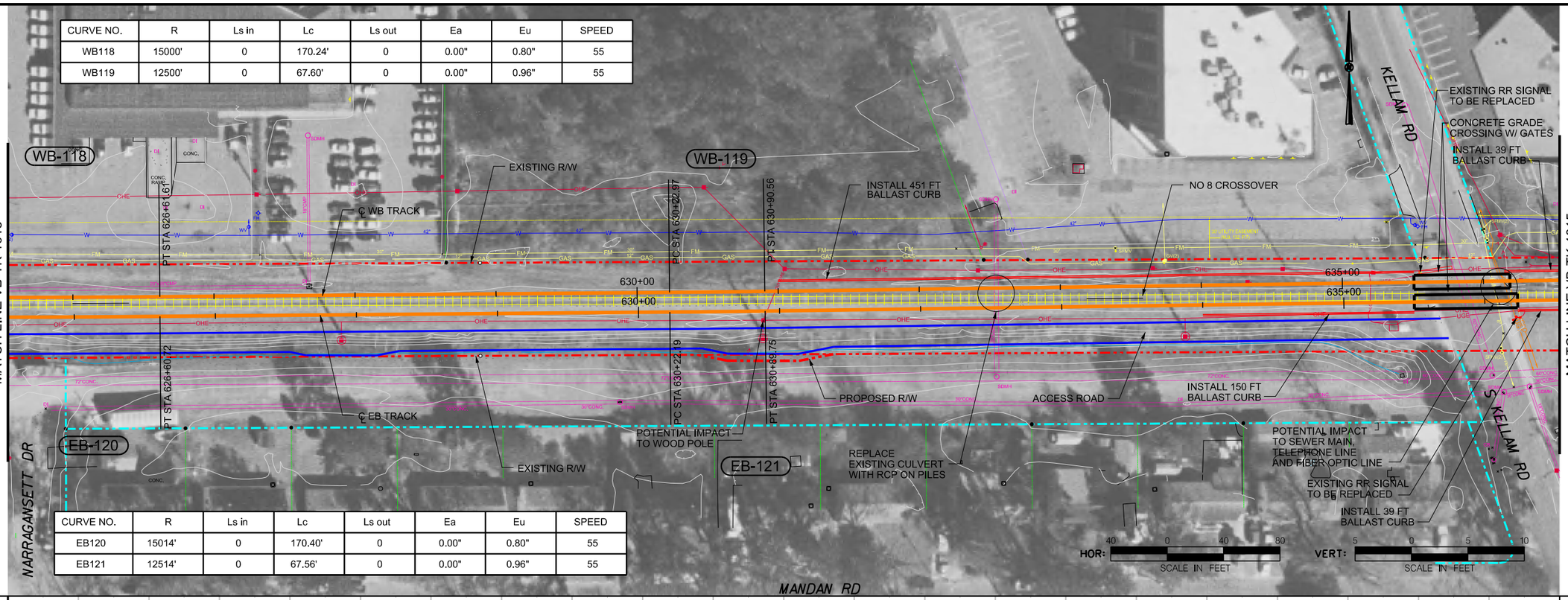

CURVE NO.	R	Ls in	Lc	Ls out	Ea	Eu	SPEED
EB120	15014'	0	170.40'	0	0.00"	0.80"	55
EB121	12514'	0	67.56'	0	0.00"	0.96"	55

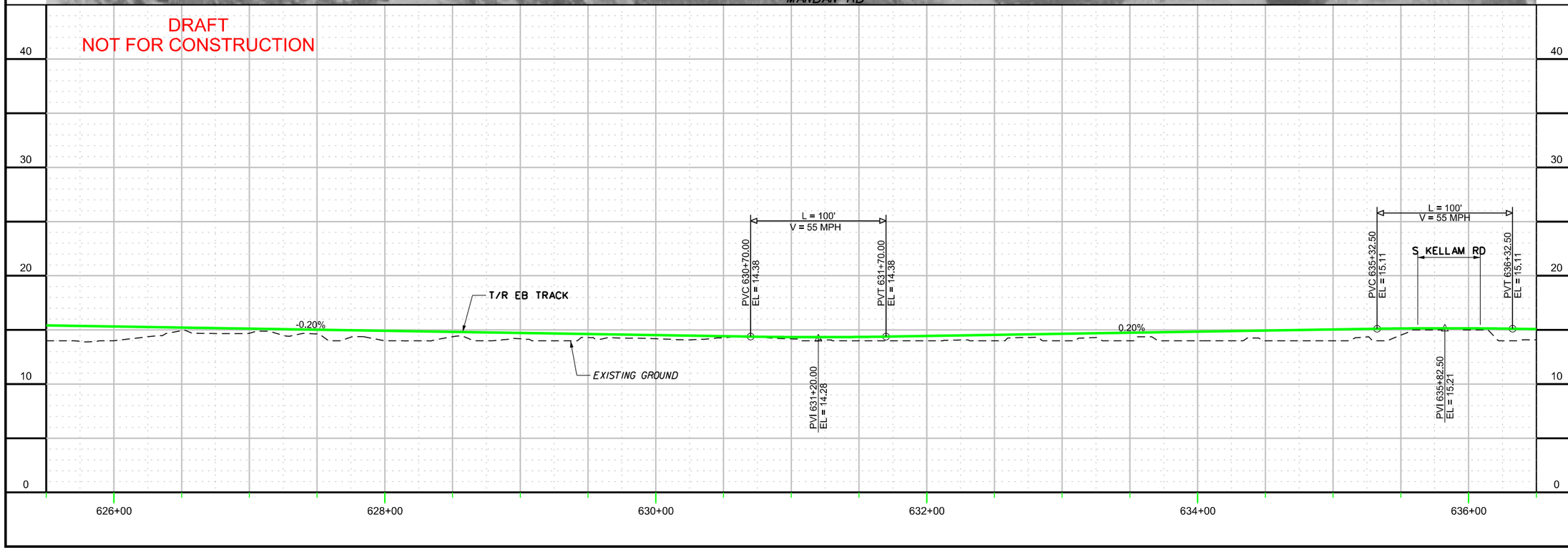

CONTRACT NO.

DRAWING NO. VB-TK-1014

OF

TRACK PLAN / PROFILE

SHEET 14 OF 52

DRAFT

DESIGN SAB	DRAWN SAB	CKCK KVL	APPR
DATE	DATE	DATE	DATE

NO.	REVISION DESCRIPTION	BY	DATE

PLANS PREPARED BY: HDR

HAMPTON ROADS TRANSIT

VIRGINIA BEACH TRANSIT EXTENSION STUDY

c:\pwworking\pitt\d0203957\S_VB-TK-1014.dgn

$TIME$

$DATE$

$FILE$

CURVE NO.	R	Ls in	Lc	Ls out	Ea	Eu	SPEED
WB118	10000'	0	113.48'	0	0.00"	1.20"	55
EB120	10014'	0	113.65'	0	0.00"	1.20"	55

MATCH LINE VB-TK-1013

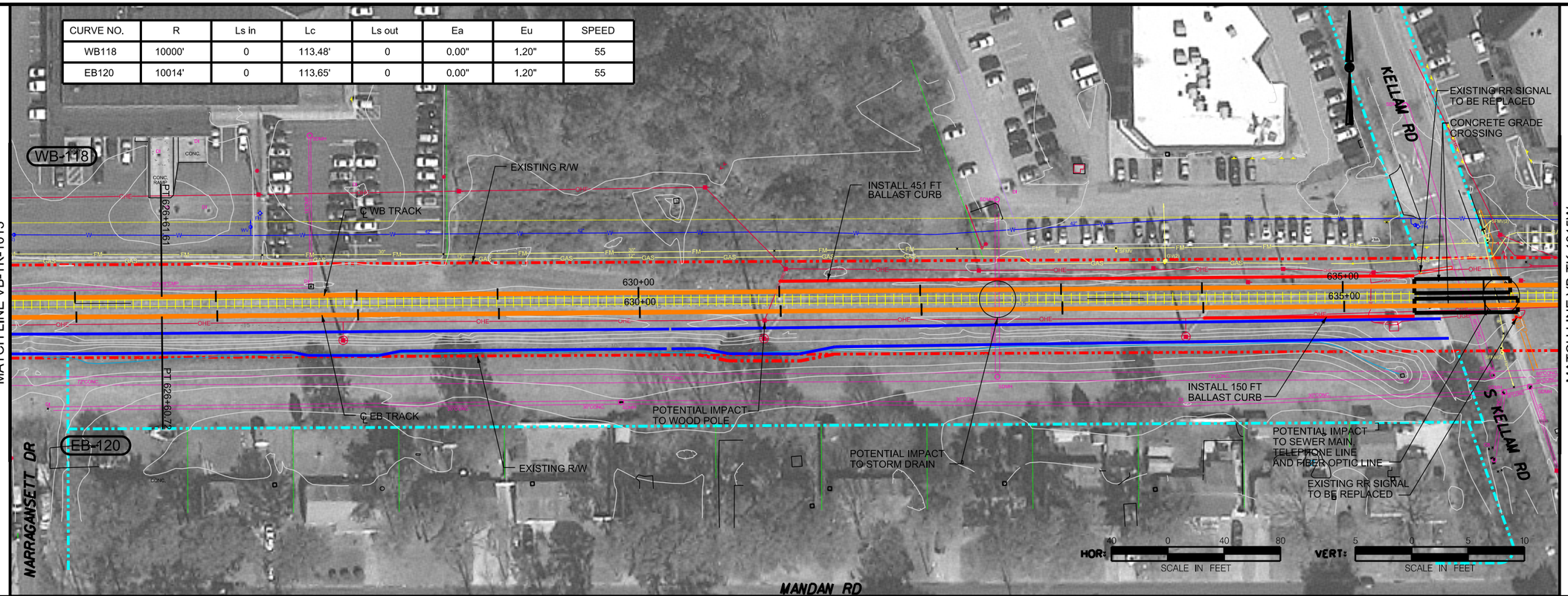

MATCH LINE VB-TK-1015W

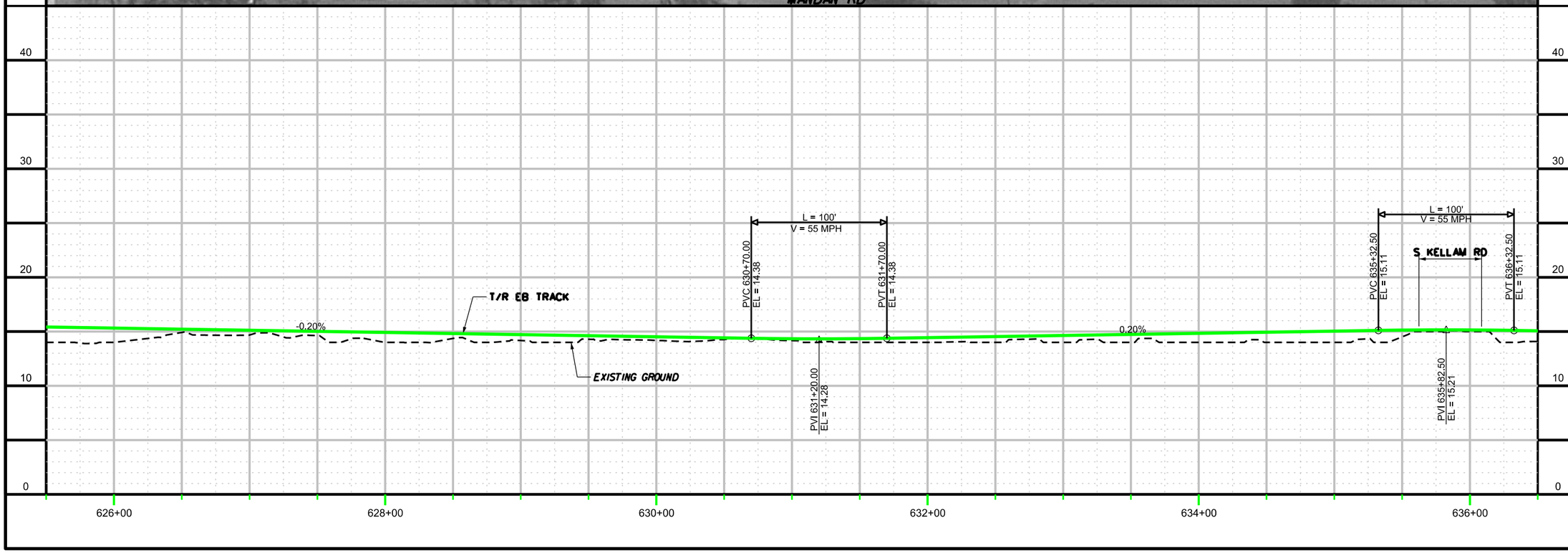

NO.	REVISION DESCRIPTION	BY	DATE

APPR.	CHCK.	DRWN.	DESIGN
	KVL	SAB	SAB

DATE	DATE	DATE	DATE

CONTRACT NO.

DRAWING NO. VB-TK-1014W

OF

TRACK PLAN / PROFILE
TOWN CENTER ALT.
WEST OF INDEPENDENCE
STATION OPTION

DRAFT

PLANS PREPARED BY:

HDR

HAMPTON ROADS TRANSIT

VIRGINIA BEACH TRANSIT EXTENSION STUDY

$TIME$

$DATE$

$FILE$

CURVE NO.	R	Ls in	Lc	Ls out	Ea	Eu	SPEED
WB120	1350'	60'	73.69'	60'	1.50"	2.09"	35
WB121	1500'	60'	114.71'	60'	1.50"	1.73"	35

CURVE NO.	R	Ls in	Lc	Ls out	Ea	Eu	SPEED
EB122	1364'	60'	75.09'	60'	1.50"	2.06"	35
EB123	1250'	60'	85.59'	60'	2.00"	1.88"	35

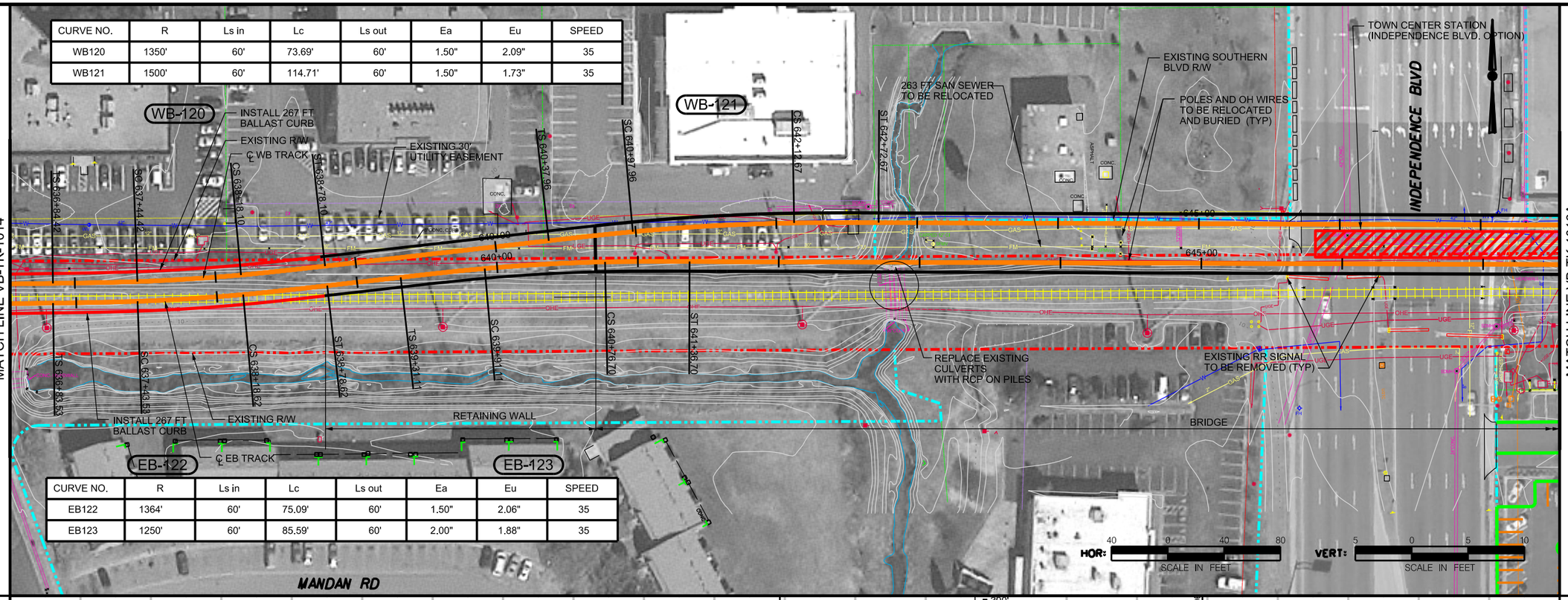

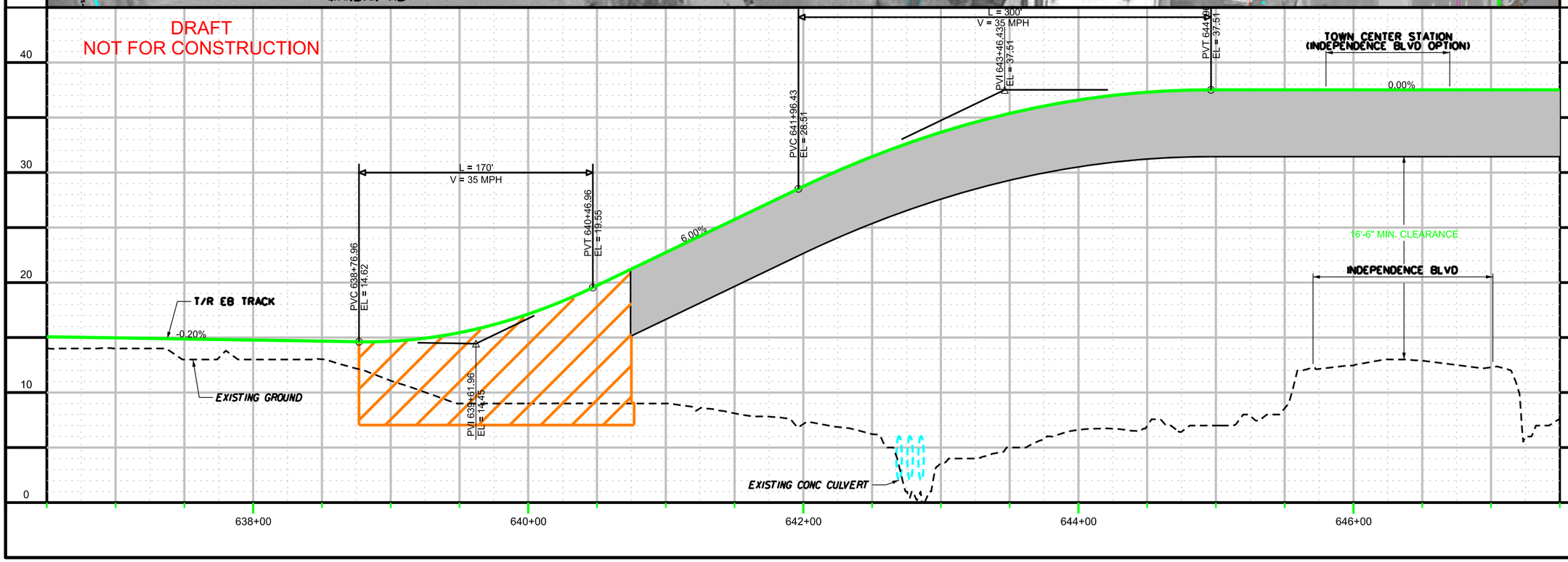

CONTRACT NO.

DRAWING NO. VB-TK-1015A

OF

TRACK PLAN / PROFILE
TOWN CENTER
INDEPENDENCE OPTION
SHEET 15A OF 52

DRAFT

NO.	REVISION DESCRIPTION	BY	DATE

APPR	CHCK	DRAWN	DESIGN
	KVL	SAB	SAB
DATE	DATE	DATE	DATE

PLANS PREPARED BY: HDR

HAMPTON ROADS TRANSIT

VIRGINIA BEACH TRANSIT EXTENSION STUDY

$TIME$

$DATE$

$FILE$

CURVE NO.	R	Ls in	Lc	Ls out	Ea	Eu	SPEED
WB122	3000'	60'	76.14'	60'	0.50"	1.12"	35
WB123	3000'	60'	76.14'	60'	0.50"	1.12"	35
WB124	2714'	60'	89.27'	60'	0.50"	1.29"	35
WB125	2500'	60'	99.20'	60'	0.50"	1.44"	35

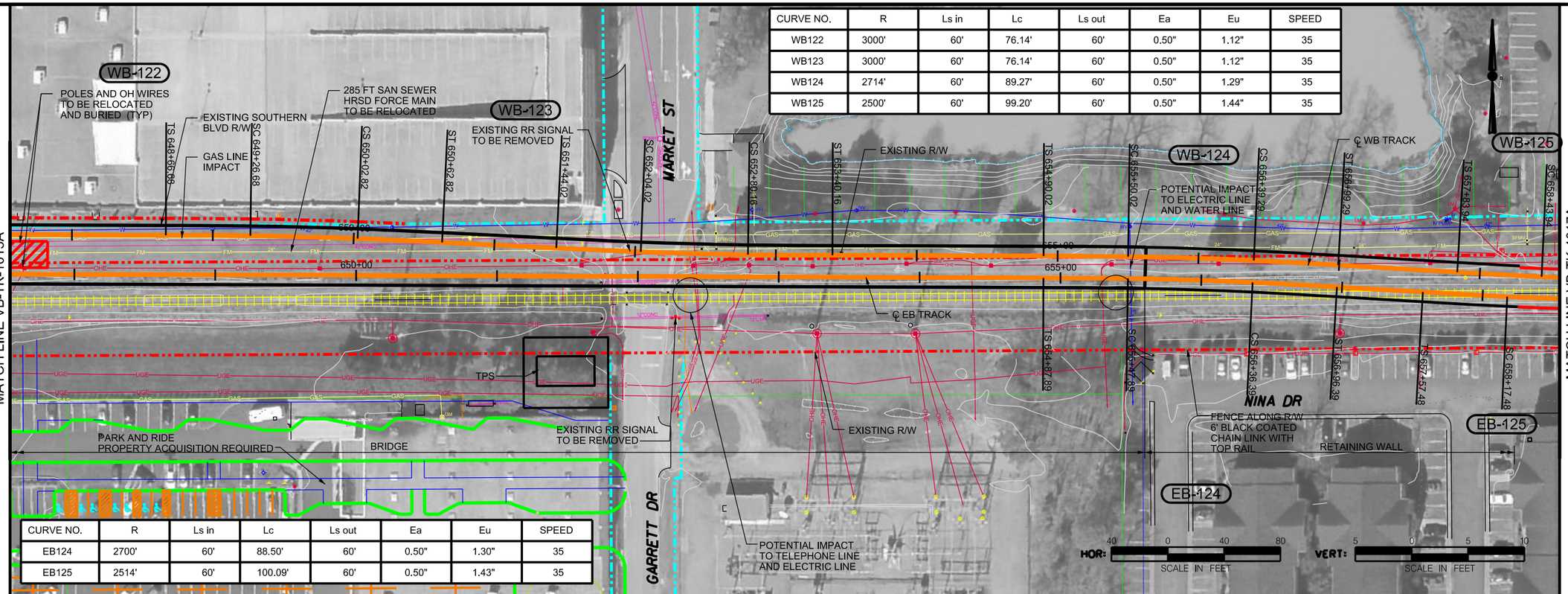

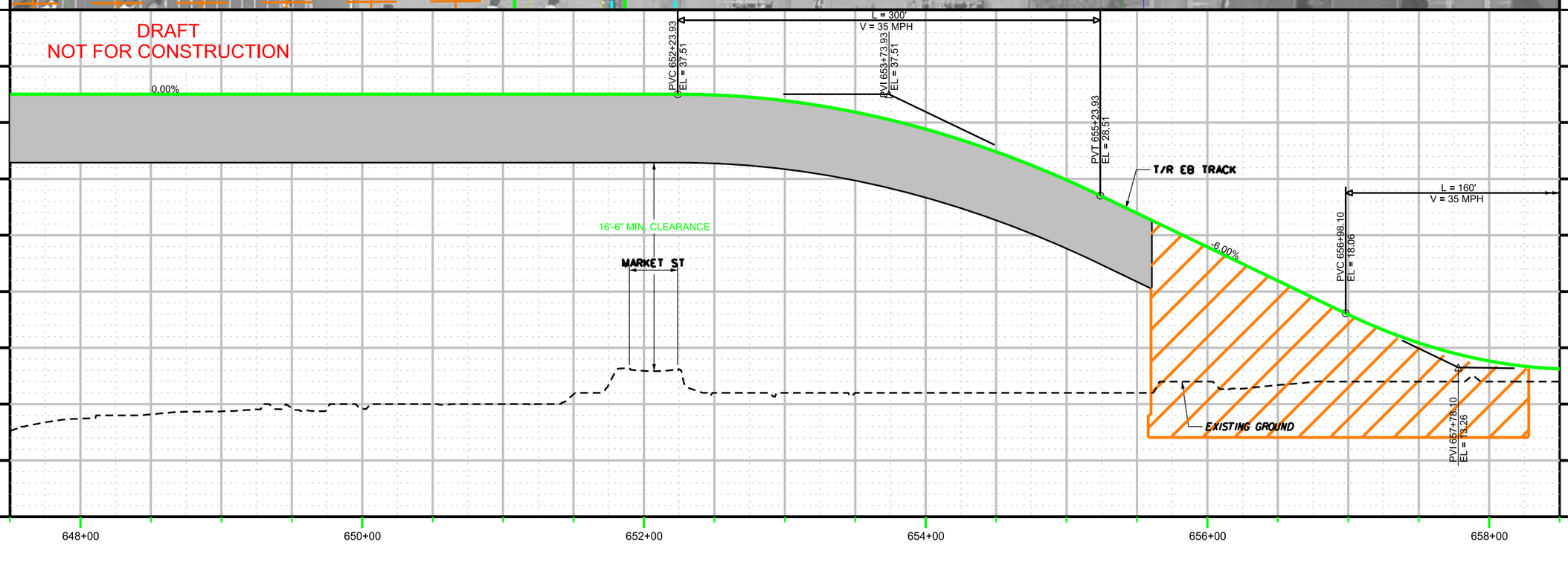

CONTRACT NO.

DRAWING NO. VB-TK-1016A

OF

TRACK PLAN / PROFILE
TOWN CENTER
INDEPENDENCE OPTION
SHEET 16A OF 52

DRAFT

APPR.	CHCK.	DRAWN	DESIGN
KVL	CHCK	SAB	SAB
DATE	DATE	DATE	DATE

NO.	REVISION DESCRIPTION	BY	DATE

PLANS PREPARED BY:

HDR

HAMPTON ROADS TRANSIT

VIRGINIA BEACH TRANSIT EXTENSION STUDY

$TIME$

$DATE$

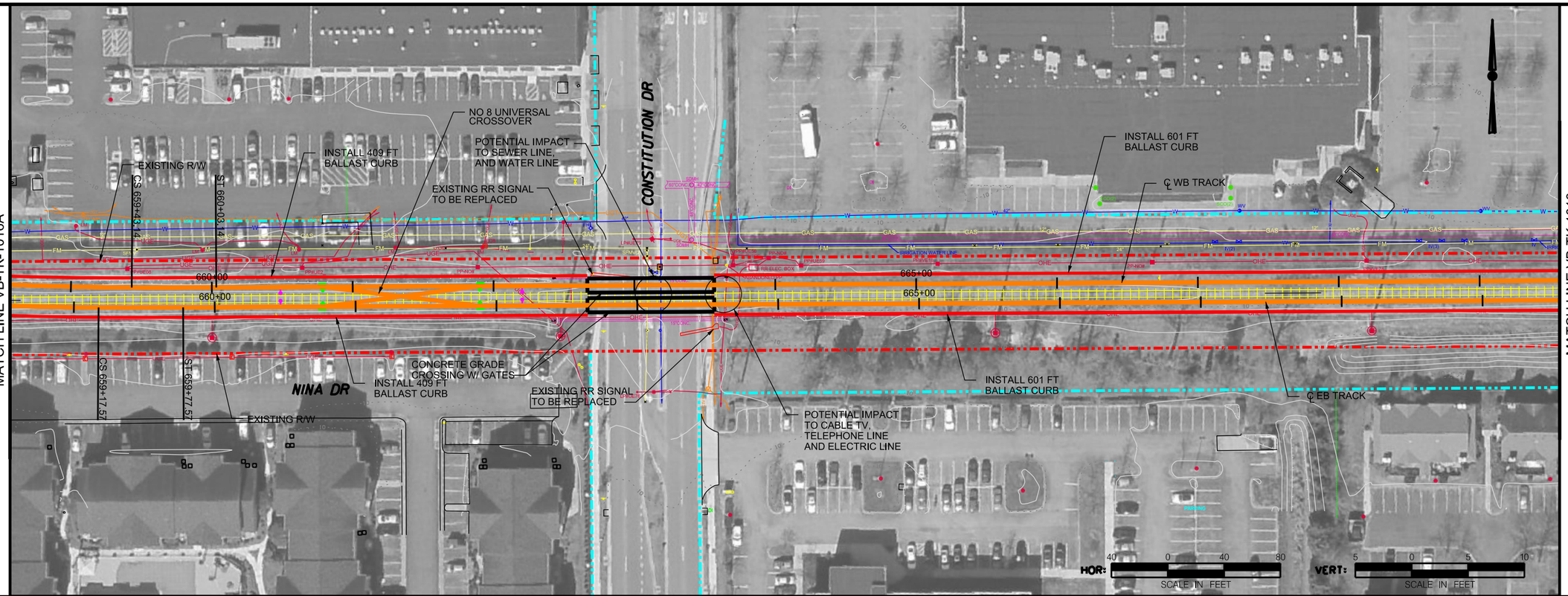

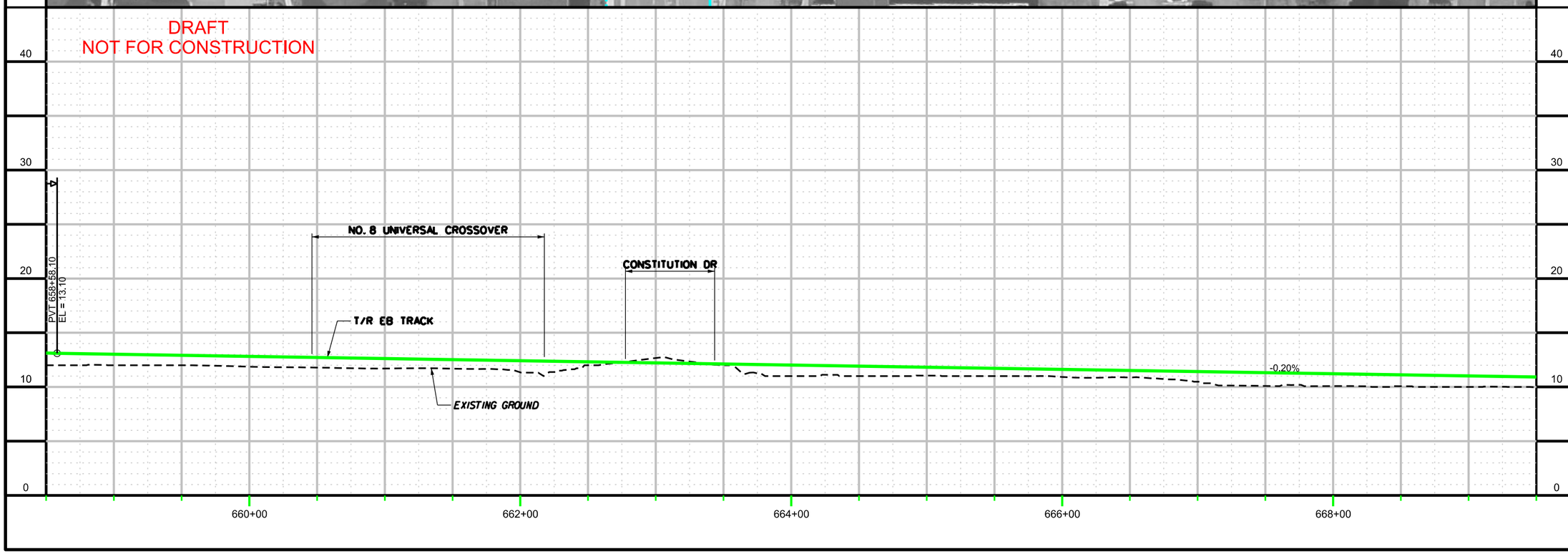

CONTRACT NO.

DRAWING NO. VB-TK-1017A

OF

TRACK PLAN / PROFILE
TOWN CENTER
INDEPENDENCE OPTION
SHEET 17A OF 52

DRAFT

APPR	DATE	CHCK	DATE	DRWN	DATE	DESIGN	DATE
		KVL		SAB		SAB	

NO.	REVISION DESCRIPTION	BY	DATE

PLANS PREPARED BY:

HDR

HAMPTON ROADS TRANSIT

VIRGINIA BEACH TRANSIT EXTENSION STUDY

$FILE$

$TIME$

$DATE$

CURVE NO.	R	Ls in	Lc	Ls out	Ea	Eu	SPEED
WB120	1350'	60'	73.69'	60'	1.50"	2.09"	35
WB121	1200'	60'	114.71'	60'	1.50"	1.73"	35

CURVE NO.	R	Ls in	Lc	Ls out	Ea	Eu	SPEED
EB122	1364'	60'	75.09'	60'	1.50"	2.06"	35
EB123	1250'	60'	85.59'	60'	2.00"	1.88"	35

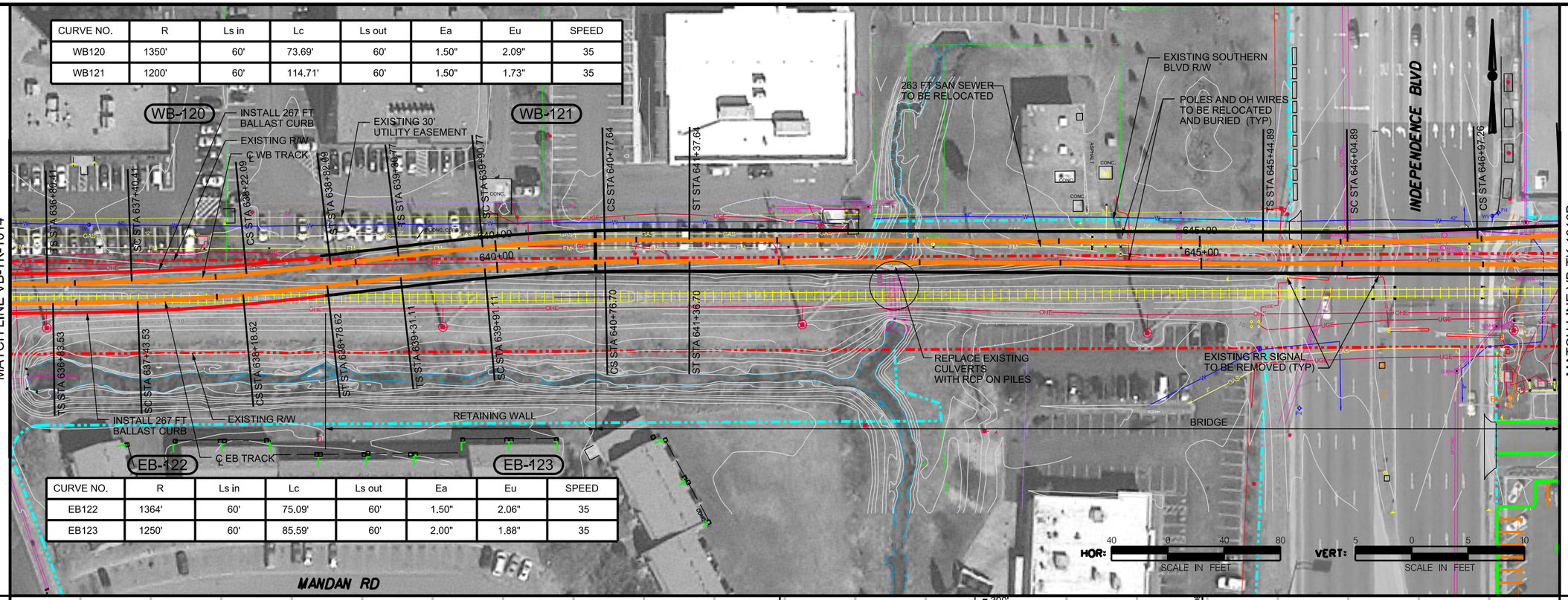

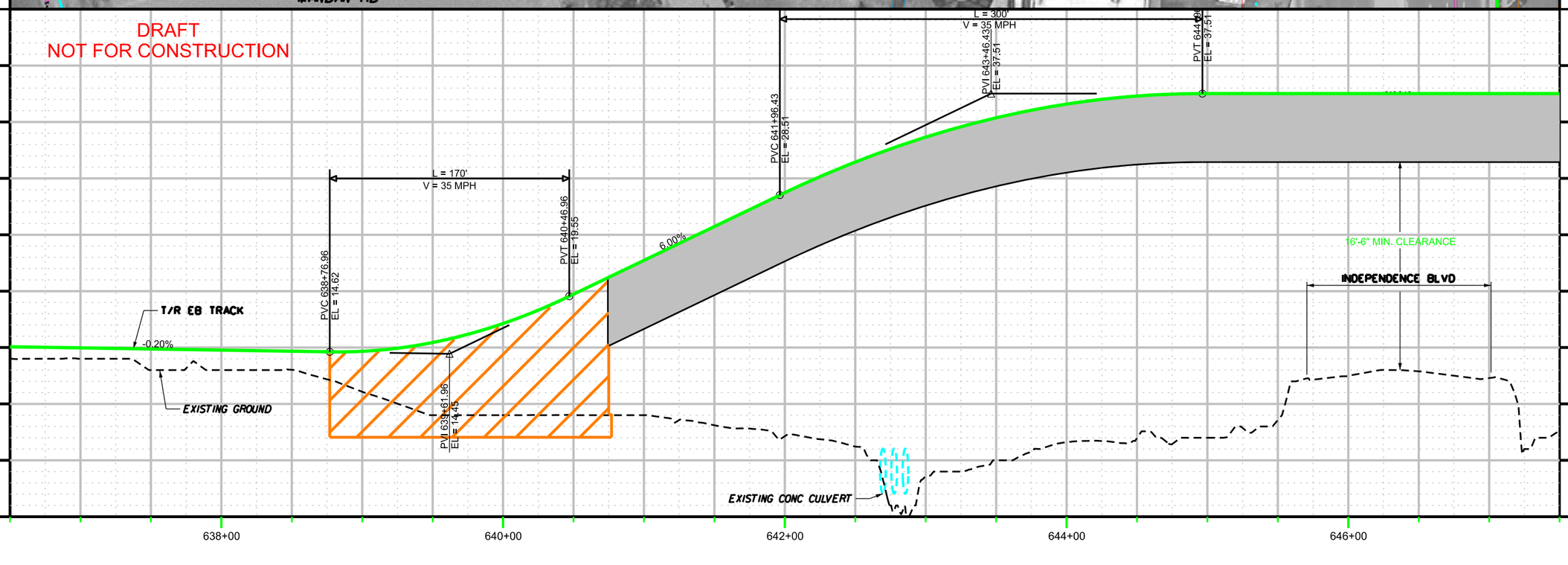

CONTRACT NO.

DRAWING NO. VB-TK-1015B

OF

TRACK PLAN / PROFILE
TOWN CENTER
MARKET ST OPTION
SHEET 15B OF 52

DRAFT

DESIGN SAB	DATE	APPR	DATE
DRAWN SAB	DATE	CKCK KVL	DATE

NO.	REVISION DESCRIPTION	BY	DATE

PLANS PREPARED BY: HDR

HAMPTON ROADS TRANSIT

VIRGINIA BEACH TRANSIT EXTENSION STUDY

$FILE$