United States Department of State
Bureau of Oceans and International
Environmental and Scientific Affairs

Draft Supplemental Environmental Impact Statement

for the

Keystone XL Project

Volume III

March 2013

Applicant for Presidential Permit: TransCanada Keystone Pipeline, LP

United States Department of State
Draft Supplemental Environmental Impact Statement

For the

KEYSTONE XL PROJECT

Applicant for Presidential Permit:
TransCanada Keystone Pipeline, LP

Volume III

Genevieve Walker
NEPA Contact & Project Manager
United States Department of State
Bureau of Oceans and International Environmental and Scientific Affairs
2201 C Street NW, Room 2726
Washington, DC 20520

Cooperating Agencies

U.S. Army Corps of Engineers (USACE)
U.S. Department of Agriculture—Farm Service Agency (FSA)
U.S. Department of Agriculture—Natural Resource Conservation Service (NRCS)
U.S. Department of Agriculture—Rural Utilities Service (RUS)
U.S. Department of Energy (DOE)
U.S. Department of Interior—Bureau of Land Management (BLM)
U.S. Department of Interior—National Park Service (NPS)
U.S. Department of Interior—U.S. Fish and Wildlife Service (USFWS)
U.S. Department of Transportation—Pipeline and Hazardous Materials Safety Administration, Office of Pipeline Safety (PHMSA)
U.S. Environmental Protection Agency (USEPA)

Assisting Agencies

U.S. Department of the Interior, Bureau of Reclamation (BOR)
Nebraska Department of Environmental Quality (NDEQ)
Various State and Local Agencies in Montana, South Dakota, Nebraska, and Kansas

March 1, 2013

Volume I

1.0 Introduction
2.0 Description of the Proposed Project and Alternatives
3.0 Affected Environment

Volume II

4.0 Environmental Consequences
5.0 Alternatives
6.0 List of Preparers
7.0 Distribution List—Supplemental EIS or Executive Summary
8.0 Index

Volume III

Appendix A Governor Approval of the Keystone XL Project in Nebraska
Appendix B PHMSA 57 Special Conditions for Keystone XL and Keystone Compared to 49 CFR 195
Appendix C Market Analysis Supplemental Information
Appendix D Waterbody Crossing Tables and Required Crossing Criteria for Reclamation Facilities
Appendix E Record of Consultation
Appendix F Scoping Summary Report
Appendix G Construction, Mitigation, and Reclamation Plan (CMRP)

Volume IV

Appendix H 2012 Biological Assessment
Appendix I Spill Prevention, Control, and Countermeasure Plan, and Emergency Response Plan Sections
Appendix J Basin Electric Big Bend to Witten 230-kV Transmission Project Routing Report
Appendix K Historical Pipeline Incident Analysis
Appendix L Oil and Gas Wells within 1320 ft of Proposed Right-of-Way
Appendix M Soil Summary for Montana, South Dakota, and Nebraska
Appendix N Supplemental Information for Compliance with MEPA
Appendix O Socioeconomics
Appendix P Crude Oil Material Safety Data Sheets
Appendix Q Pipeline Risk Assessment and Environmental Consequence Analysis
Appendix R Construction/Reclamation Plans and Documentation
Appendix S Pipeline Temperature Effects Study
Appendix T Literature Review
Appendix U Screening Level Oil Spill Modeling
Appendix V Past, Present, and Reasonably Foreseeable Future Project Descriptions
Appendix W Life-Cycle Greenhouse Gas Emissions of Petroleum Products from WCSB Oil Sands Crudes Compared with Reference Crudes
Appendix X Canadian Environmental Assessment Act
Appendix Y Pipeline Construction in Sand Hills Native Rangelands
Appendix Z Estimated Criteria Pollutants, Noise, and GHG Emissions

TABLE OF CONTENTS

1.0 INTRODUCTION 1-1

1.1 Background 1.1-1
1.1.1 Overview and Structure of the Supplemental EIS 1.1-2
1.1.2 References 1.1-8

1.2 Overview of Proposed Project 1.2-1
1.2.1 Proposed Project Delivery Amounts and Commitments 1.2-1
1.2.2 Project-Specific Special Conditions 1.2-2
1.2.3 References 1.2-2

1.3 Purpose and Need 1.3-1
1.3.1 Project Purpose and Need 1.3-1
1.3.2 Department of State Purpose and Need 1.3-2
1.3.3 Department of Interior—Bureau of Land Management Purpose and Need 1.3-3
1.3.4 Western Area Power Administration Purpose and Need 1.3-3

1.4 Market Analysis 1.4-1
1.4.1 Introduction 1.4-1
1.4.2 PADD Regions in the U.S. Crude Oil Market 1.4-2
1.4.3 Market Analysis Presented in 2011 Final EIS 1.4-3
1.4.4 Market Developments Since the 2011 Final EIS 1.4-7
1.4.4.1 Reduction in U.S. Demand 1.4-8
1.4.4.2 Refined Product and Crude Oil Exports 1.4-14
1.4.4.3 Increase in United States Crude Oil Production 1.4-17
1.4.4.4 Increase in Projected Canadian Crude Oil Production 1.4-24
1.4.5 Pipeline Capacity out of WCSB 1.4-26
1.4.6 Crude Oil Transportation 1.4-28
1.4.6.1 Increases in Pipeline Capacity 1.4-28
1.4.6.2 Increases in Rail Capacity 1.4-33
1.4.6.3 Rail Potential to Transport WCSB Crude Oil 1.4-42
1.4.7 Additional Issues in Market Outlook 1.4-61
1.4.8 Additional Market Issues From Scoping Comments—Crude Price Differences and Gasoline Prices 1.4-64
1.4.9 References 1.4-66

1.5 Agency Participation 1.5-1
1.5.1 Federal Lead Agency—U.S. Department of State 1.5-1
1.5.2 Cooperating Agencies 1.5-2
1.5.2.1 U.S. Environmental Protection Agency 1.5-2
1.5.2.2 U.S. Department of Interior, Bureau of Land Management 1.5-2
1.5.2.3 U.S. Department of the Interior, National Park Service 1.5-3
1.5.2.4 U.S. Department of the Interior, U.S. Fish and Wildlife Service 1.5-3
1.5.2.5 U.S. Department of Agriculture, Natural Resources Conservation Service 1.5-3
1.5.2.6 U.S. Department of Agriculture, Farm Service Agency 1.5-4
1.5.2.7 U.S. Department of Agriculture, Rural Utilities Service 1.5-4
1.5.2.8 U.S. Army Corps of Engineers 1.5-4
1.5.2.9 U.S. Department of Energy 1.5-5
1.5.2.10 U.S. Department of Transportation, Pipeline and Hazardous Materials Safety Administration, Office of Pipeline Safety 1.5-6
1.5.3 Assisting Agencies and Other State Agencies 1.5-6
1.5.4 References 1.5-7

1.6 Tribal and SHPO Consultation 1.6-1
1.6.1 Tribal Consultation 1.6-1
1.6.2 SHPO Consultation 1.6-1

1.7 Environmental Review of the Canadian Portion of the Keystone XL Project 1.7-1

1.8 Preparation of Publication 1.8-1
1.8.1 Previous Keystone XL EIS Documents 1.8-1
1.8.1.1 Preparation of Draft EIS for the 2011 Final EIS Process 1.8-1
1.8.1.2 Preparation of Supplemental Draft EIS for the 2011 Final EIS Process 1.8-2
1.8.1.3 Preparation of the 2011 Final EIS 1.8-2
1.8.2 Scoping for the Supplemental EIS 1.8-2

1.9 Permits, Approvals, and Regulatory Requirements 1.9-1

2.0 DESCRIPTION OF THE PROPOSED PROJECT AND ALTERNATIVES 2-1

2.1 Overview of the Proposed Project 2.1-1
2.1.1 Pipeline Route 2.1-2
2.1.2 Land Requirements 2.1-14
2.1.3 Borrow Material Requirements 2.1-14
2.1.4 Aboveground Facilities 2.1-16
2.1.4.1 Pump Stations 2.1-19
2.1.4.2 Pigging Facilities 2.1-20

2.1.4.3 Densitometer Facilities 2.1-20
2.1.4.4 Mainline Valves 2.1-22
2.1.5 Ancillary Facilities 2.1-24
2.1.5.1 Additional Temporary Workspace Areas 2.1-24
2.1.5.2 Pipe Storage Sites and Contractor Yards 2.1-24
2.1.5.3 Fuel Transfer Stations 2.1-26
2.1.5.4 Construction Camps 2.1-27
2.1.6 Access Roads 2.1-32
2.1.6.1 Development of Access Roads 2.1-32
2.1.6.2 Roadway Maintenance, Repair, and Safety 2.1-32
2.1.7 Pipeline System Design and Construction Procedures 2.1-33
2.1.7.1 Pipeline Design 2.1-35
2.1.7.2 Pipeline Construction Procedures 2.1-38
2.1.8 Special Pipeline Construction Procedures 2.1-50
2.1.8.1 Road, Highway, and Railroad Crossings 2.1-51
2.1.8.2 Pipeline, Utility, and Other Buried Feature Crossings 2.1-51
2.1.8.3 Steep Terrain 2.1-53
2.1.8.4 Unstable Soils 2.1-53
2.1.8.5 Ripping 2.1-54
2.1.8.6 Construction near Structures 2.1-54
2.1.8.7 Fences and Grazing 2.1-55
2.1.9 Waterbody Crossings 2.1-55
2.1.9.1 Open-Cut Crossing Methods 2.1-56
2.1.9.2 Wetland Crossings 2.1-60
2.1.9.3 Aboveground and Ancillary Facilities Construction Procedures 2.1-61
2.1.10 Construction Schedule, Workforce, and Environmental Inspection 2.1-62
2.1.10.1 Schedule and Workforce 2.1-62
2.1.10.2 Environmental Inspection 2.1-64
2.1.11 Operations and Maintenance 2.1-64
2.1.11.1 Normal Operations and Routine Maintenance 2.1-65
2.1.11.2 Abnormal Operations 2.1-66
2.1.12 Connected Actions 2.1-74
2.1.12.1 Bakken Marketlink Project 2.1-75
2.1.12.2 Big Bend to Witten 230-kV Transmission Line 2.1-78
2.1.12.3 Electrical Distribution Lines and Substations 2.1-81
2.1.13 Proposed Project Decommissioning 2.1-87
2.1.13.1 Proposed Project Life 2.1-87
2.1.13.2 Decommissioning 2.1-87
2.1.14 References 2.1-89

2.2 Description of Reasonable Alternatives 2.2-1
2.2.1 Rationale for Considering Alternatives 2.2-1
2.2.2 Overview of Alternatives 2.2-1
2.2.3 No Action Alternative 2.2-2
2.2.3.1 Identification and Screening of No Action Alternative Scenarios 2.2-6
2.2.3.2 Rail/Pipeline Scenario 2.2-9
2.2.3.3 Rail/Tanker Scenario 2.2-19
2.2.3.4 Scenarios Considered but Eliminated from Detailed Analysis 2.2-26
2.2.4 Major Pipeline Route Alternatives 2.2-40
2.2.4.1 Screening of Reasonable Major Route Alternatives 2.2-41
2.2.4.2 Steele City Segment-A1A Alternative 2.2-51
2.2.4.3 2011 Steele City Alternative 2.2-52
2.2.4.4 I-90 Corridor Alternative 2.2-55
2.2.5 Other Alternatives Considered 2.2-60
2.2.5.1 Route Variations 2.2-60
2.2.5.2 Alternative Pipeline Design 2.2-60
2.2.6 Summary 2.2-62
2.2.7 References 2.2-62

3.0 AFFECTED ENVIRONMENT 3-1

3.1 Geology 3.1-1
3.1.1 Introduction 3.1-1
3.1.2 Environmental Setting 3.1-1
3.1.2.1 Geological Resources 3.1-1
3.1.2.2 Paleontological Resources 3.1-8
3.1.2.3 Potential Fossil-Bearing Geologic Formations 3.1-9
3.1.2.4 Fossil Fuel and Mineral and Resources 3.1-18
3.1.2.5 Geologic Hazards 3.1-19
3.1.3 Connected Actions 3.1-24
3.1.3.1 Bakken Marketlink Project 3.1-24
3.1.3.2 Big Bend to Witten 230-kV Transmission Line 3.1-29
3.1.3.3 Electrical Distribution Lines and Substations 3.1-29
3.1.4 References 3.1-29

3.2 Soils 3.2-1
3.2.1 Introduction 3.2-1
3.2.2 Environmental Setting 3.2-1
3.2.2.1 Montana 3.2-2
3.2.2.2 South Dakota 3.2-2
3.2.2.3 Nebraska 3.2-4

3.2.2.4 Kansas 3.2-7
3.2.2.5 North Dakota 3.2-7
3.2.3 Connected Actions 3.2-7
3.2.3.1 Bakken Marketlink Project 3.2-7
3.2.3.2 Big Bend to Witten 230-kV Transmission Line 3.2-7
3.2.3.3 Electrical Distribution Lines and Substations 3.2-8
3.2.4 References 3.2-8

3.3 Water Resources 3.3-1
3.3.1 Introduction 3.3-1
3.3.2 Groundwater 3.3-1
3.3.2.1 Hydrogeologic Setting 3.3-1
3.3.2.2 Proposed Pipeline Area Hydrogeologic Conditions 3.3-8
3.3.3 Surface Water 3.3-26
3.3.3.1 Montana Surface Water 3.3-26
3.3.3.2 South Dakota Surface Water 3.3-30
3.3.3.3 Nebraska Surface Water 3.3-33
3.3.4 Floodplains 3.3-38
3.3.5 Connected Actions 3.3-42
3.3.6 References 3.3-42

3.4 Wetlands 3.4-1
3.4.1 Introduction 3.4-1
3.4.2 Environmental Setting 3.4-1
3.4.2.1 Montana 3.4-3
3.4.2.2 North Dakota 3.4-4
3.4.2.3 South Dakota 3.4-4
3.4.2.4 Nebraska 3.4-5
3.4.2.5 Kansas 3.4-6
3.4.3 Wetlands of Special Concern or Value 3.4-7
3.4.3.1 Sensitive Wetland Areas 3.4-7
3.4.3.2 Protected Wetlands 3.4-8
3.4.3.3 Important Habitat for Wildlife and Threatened/Endangered Species 3.4-9
3.4.4 Federal and State Regulatory Setting 3.4-9
3.4.5 Connected Actions 3.4-13
3.4.6 References 3.4-14

3.5 Terrestrial Vegetation 3.5-1
3.5.1 Introduction 3.5-1
3.5.2 Ecoregions 3.5-1
3.5.3 General Vegetation Resources 3.5-2

3.5.4 Biologically Unique Landscapes and Vegetation Communities of Conservation Concern 3.5-21
3.5.4.1 Native Grasslands 3.5-21
3.5.4.2 Rainwater Basin 3.5-22
3.5.4.3 Sagebrush Steppe 3.5-22
3.5.4.4 Riparian Habitats and Bottomland Hardwood 3.5-22
3.5.4.5 Forest Communities 3.5-29
3.5.4.6 Traditionally Used Native Plants 3.5-29
3.5.5 Wetland and Conservation Easements 3.5-30
3.5.6 Noxious Weeds 3.5-30
3.5.7 Connected Actions 3.5-33
3.5.8 References 3.5-33

3.6 Wildlife 3.6-1
3.6.1 Introduction 3.6-1
3.6.2 Environmental Setting 3.6-1
3.6.2.1 Big Game Animals 3.6-2
3.6.2.2 Small Game and Furbearers 3.6-3
3.6.2.3 Waterfowl and Game Birds 3.6-5
3.6.2.4 Non-Game Animals 3.6-7
3.6.3 Connected Actions 3.6-13
3.6.4 References 3.6-13

3.7 Fisheries 3.7-1
3.7.1 Introduction 3.7-1
3.7.2 Environmental Setting 3.7-1
3.7.2.1 Fisheries Resources 3.7-2
3.7.2.2 Types of Fisheries Affected 3.7-7
3.7.2.3 Connected Actions 3.7-10
3.7.3 References 3.7-11

3.8 Threatened and Endangered Species and Species of Conservation Concern 3.8-1
3.8.1 Introduction 3.8-1
3.8.2 Regulatory Framework 3.8-1
3.8.2.1 Federal Regulations 3.8-1
3.8.2.2 State Regulations 3.8-3
3.8.3 Federally Protected and Candidate Species 3.8-4
3.8.3.1 Federally Protected Mammals 3.8-6
3.8.3.2 Federally Protected and Candidate Birds 3.8-9
3.8.3.3 Federally Protected Fish 3.8-14

3.8.3.4 Federally Protected Invertebrates 3.8-17
3.8.3.5 Federally Protected Plants 3.8-19
3.8.4 Bureau of Land Management Sensitive Animals and Plants 3.8-21
3.8.5 State-Protected Species 3.8-25
3.8.5.1 Montana State Protected Species 3.8-27
3.8.5.2 South Dakota State Protected Species 3.8-27
3.8.5.3 Nebraska State Protected Species 3.8-32
3.8.5.4 Kansas State Protected Species 3.8-33
3.8.6 Animals and Plants of Conservation Concern 3.8-34
3.8.7 Connected Actions 3.8-35
3.8.7.1 Bakken Marketlink Project 3.8-35
3.8.7.2 Big Bend to Witten 240-kV Transmission Line 3.8-36
3.8.7.3 Electrical Distribution Lines and Substations 3.8-36
3.8.8 References 3.8-36

3.9 Land Use, Recreation, and Visual Resources 3.9-1
3.9.1 Introduction 3.9-1
3.9.2 Environmental Setting 3.9-1
3.9.2.1 Land Ownership 3.9-1
3.9.2.2 Conservation Programs 3.9-4
3.9.2.3 Visual Resources 3.9-7
3.9.3 Connected Actions 3.9-9
3.9.3.1 Bakken Marketlink Project 3.9-9
3.9.3.2 Big Bend to Witten 230-kV Transmission Line 3.9-10
3.9.3.3 Electrical Distribution Lines and Substations 3.9-11
3.9.4 References 3.9-13

3.10 Socioeconomics 3.10-1
3.10.1 Introduction 3.10-1
3.10.2 Environmental Setting 3.10-3
3.10.2.1 Population 3.10-7
3.10.2.2 Housing 3.10-10
3.10.2.3 Local Economic Activity 3.10-12
3.10.2.4 Environmental Justice 3.10-25
3.10.2.5 Public Services, Tax Revenues, and Property Values 3.10-34
3.10.2.6 Traffic and Transportation 3.10-40
3.10.3 Connected Actions 3.10-44
3.10.3.1 Bakken Marketlink Project 3.10-44
3.10.3.2 Big Bend to Witten 230-kV Transmission Line 3.10-45
3.10.3.3 Electrical Distribution Lines and Substations 3.10-46
3.10.4 References 3.10-49

3.11 Cultural Resources 3.11-1
3.11.1 Introduction 3.11-1
3.11.2 Regulatory Framework 3.11-1
3.11.2.1 Section 106 National Historic Preservation Act 3.11-1
3.11.2.2 National Register of Historic Places 3.11-3
3.11.2.3 Properties of Religious and Cultural Significance (Including TCPs) 3.11-4
3.11.2.4 Archaeological Resources Protection Act and Native American Graves Protection and Repatriation Act 3.11-4
3.11.3 Cultural Setting 3.11-5
3.11.3.1 Cultural Context 3.11-5
3.11.3.2 Area of Potential Effect 3.11-5
3.11.3.3 Cultural Resources Surveys 3.11-6
3.11.3.4 Programmatic Agreement 3.11-28
3.11.4 Consultation 3.11-28
3.11.4.1 Introduction 3.11-28
3.11.4.2 Federal and State Agency Consultation 3.11-29
3.11.4.3 Tribal Consultation 3.11-29
3.11.5 Public Involvement 3.11-33
3.11.6 Unanticipated Discovery Plans 3.11-34
3.11.7 Tribal Monitoring Plan 3.11-34
3.11.8 Connected Actions 3.11-35
3.11.8.1 Bakken Marketlink Project 3.11-35
3.11.8.2 Big Bend to Witten 230-kV Transmission Line 3.11-35
3.11.8.3 Electrical Distribution Lines and Substations 3.11-36
3.11.9 References 3.11-36

3.12 Air Quality and Noise 3.12-1
3.12.1 Introduction 3.12-1
3.12.2 Air Quality 3.12-3
3.12.2.1 Environmental Setting 3.12-3
3.12.2.2 Regulatory Requirements 3.12-7
3.12.3 Noise 3.12-22
3.12.3.1 Environmental Setting 3.12-22
3.12.3.2 Regulatory Requirements 3.12-25
3.12.4 Connected Actions 3.12-27
3.12.4.1 Bakken Marketlink Project 3.12-27
3.12.4.2 Big Bend to Witten 230-kV Transmission Line 3.12-27
3.12.4.3 Electrical Distribution Lines and Substations 3.12-27
3.12.5 References 3.12-28

3.13 Potential Releases 3.13-1
3.13.1 Introduction 3.13-1
3.13.2 Crude Oil Characteristics 3.13-1
3.13.3 General Description of Proposed Pipeline Transported Crude Oils 3.13-3
3.13.3.1 Synthetic Crude Oil 3.13-4
3.13.3.2 Dilbit 3.13-4
3.13.3.3 Bakken Shale Oil 3.13-7
3.13.3.4 Flammability and Explosion Potential 3.13-7
3.13.3.5 Acidity and Corrosivity Potential 3.13-7
3.13.4 Pipeline and Component Integrity Threats 3.13-9
3.13.4.1 Time-Dependent Threats 3.13-10
3.13.4.2 Stable Threats 3.13-14
3.13.4.3 Time-Independent Threats 3.13-16
3.13.4.4 Potential Spill Sources 3.13-17
3.13.5 Potential Spill Receptors 3.13-18
3.13.5.1 High Consequence Areas 3.13-20
3.13.5.2 Other Resources 3.13-22
3.13.6 Spill Magnitudes 3.13-23
3.13.6.1 Small Spills 3.13-23
3.13.6.2 Medium Spills 3.13-23
3.13.6.3 Large Spills 3.13-23
3.13.7 Connected Actions 3.13-24
3.13.8 References 3.13-25

4.0 ENVIRONMENTAL CONSEQUENCES 4-1

4.1 Geology 4.1-1
4.1.1 Introduction 4.1-1
4.1.2 Impact Assessment Methodology 4.1-1
4.1.3 Potential Impacts 4.1-2
4.1.3.1 Geological Resources 4.1-2
4.1.3.2 Paleontological Resources 4.1-3
4.1.3.3 Mineral and Fossil Fuel Resources 4.1-5
4.1.3.4 Geologic Hazards 4.1-6
4.1.4 Recommended Additional Mitigation 4.1-7
4.1.5 Connected Actions 4.1-8
4.1.5.1 Bakken Marketlink Project 4.1-8
4.1.5.2 Big Bend to Witten 230-kV Transmission Line 4.1-8
4.1.5.3 Electrical Distribution Lines and Substations 4.1-8
4.1.6 References 4.1-8

4.2 Soils 4.2-1
4.2.1 Introduction 4.2-1
4.2.2 Impact Assessment Methodology 4.2-1
4.2.3 Potential Impacts 4.2-2
4.2.3.1 Construction Impacts 4.2-2
4.2.3.2 Operation Impacts 4.2-9
4.2.4 Recommended Additional Mitigation 4.2-10
4.2.4.1 Construction 4.2-10
4.2.4.2 Operation 4.2-11
4.2.5 Connected Actions 4.2-11
4.2.5.1 Bakken Marketlink Project 4.2-11
4.2.5.2 Big Bend to Witten 230-kV Transmission Line 4.2-11
4.2.5.3 Electrical Distribution Lines and Substations 4.2-12
4.2.6 References 4.2-12

4.3 Water Resources 4.3-1
4.3.1 Introduction 4.3-1
4.3.2 Impact Assessment Methodology 4.3-2
4.3.2.1 Groundwater 4.3-2
4.3.2.2 Surface Water 4.3-3
4.3.3 Potential Impacts 4.3-4
4.3.3.1 Groundwater 4.3-4
4.3.3.2 Surface Water 4.3-12
4.3.3.3 Operational-Related Impacts 4.3-18
4.3.3.4 Floodplains 4.3-19
4.3.4 Recommended Additional Mitigation 4.3-20
4.3.5 Connected Actions 4.3-23
4.3.5.1 Bakken Marketlink Project 4.3-23
4.3.5.2 Big Bend to Witten 230-kV Transmission Line 4.3-24
4.3.5.3 Electrical Distribution Lines and Substations 4.3-24
4.3.6 References 4.3-25

4.4 Wetlands 4.4-1
4.4.1 Introduction 4.4-1
4.4.2 Impact Assessment Methodology 4.4-1
4.4.3 Potential Wetland Impacts 4.4-3
4.4.4 Recommended Additional Mitigation 4.4-13
4.4.5 Connected Actions 4.4-14
4.4.5.1 Bakken Marketlink Project 4.4-14
4.4.5.2 Big Bend to Witten 230-Kilovolt (kV) Transmission Line 4.4-14

4.4.5.3 Electrical Distribution Lines and Substations 4.4-15
4.4.6 References 4.4-17

4.5 Terrestrial Vegetation 4.5-1
4.5.1 Introduction 4.5-1
4.5.2 Impact Assessment Methodology 4.5-1
4.5.3 General Vegetation Impacts 4.5-2
4.5.4 Potential Impacts to Biologically Unique Landscapes and Vegetation Communities of Conservation Concern 4.5-11
4.5.5 Recommended Additional Mitigation 4.5-17
4.5.6 Connected Actions 4.5-17
4.5.6.1 Bakken Marketlink Project 4.5-17
4.5.6.2 Big Bend to Witten 230-kV Transmission Line 4.5-18
4.5.6.3 Electrical Distribution Lines and Substations 4.5-18
4.5.7 References 4.5-20

4.6 Wildlife 4.6-1
4.6.1 Introduction 4.6-1
4.6.2 Impact Assessment Methodology 4.6-1
4.6.3 Potential Impacts 4.6-1
4.6.3.1 Big Game Species 4.6-6
4.6.3.2 Small Game Species and Furbearers 4.6-7
4.6.3.3 Waterfowl and Game Bird Species 4.6-8
4.6.3.4 Non-game Animals 4.6-8
4.6.3.5 Mitigation Measures 4.6-12
4.6.4 Recommended Additional Mitigation 4.6-14
4.6.5 Connected Actions 4.6-14
4.6.5.1 Bakken Marketlink Project 4.6-14
4.6.5.2 Big Bend to Witten 230-kV Transmission Line 4.6-14
4.6.5.3 Electrical Distribution Lines and Substations 4.6-15
4.6.6 References 4.6-17

4.7 Fisheries 4.7-1
4.7.1 Introduction 4.7-1
4.7.2 Impact Assessment Methodology 4.7-1
4.7.3 Potential Impacts 4.7-1
4.7.3.1 Introduction of Invasive/Non-Native Species 4.7-2
4.7.3.2 Construction Impacts 4.7-2
4.7.3.3 Proposed Project Operational Impacts 4.7-12
4.7.4 Recommended Additional Mitigation 4.7-13
4.7.5 Connected Actions 4.7-14

4.7.5.1 Bakken Marketlink Project 4.7-14
4.7.5.2 Big Bend to Witten 230-kV Transmission Line 4.7-14
4.7.5.3 Electrical Distribution Lines and Substations 4.7-15
4.7.6 References 4.7-15

4.8 Threatened and Endangered Species and Species of Conservation Concern 4.8-1
4.8.1 Introduction 4.8-1
4.8.2 Impact Assessment and Methodology 4.8-1
4.8.3 Potential Impacts 4.8-1
4.8.3.1 ESA Federally Protected and Candidate Species 4.8-2
4.8.3.2 Bureau of Land Management Sensitive Animals and Plant Species 4.8-23
4.8.3.3 State Protected Animals and Plants 4.8-25
4.8.3.4 Animals and Plants of Conservation Concern 4.8-33
4.8.4 Recommended Additional Mitigation 4.8-35
4.8.5 Connected Actions 4.8-35
4.8.5.1 Bakken Marketlink Project 4.8-35
4.8.5.2 Big Bend to Witten 230-kV Transmission Line 4.8-36
4.8.5.3 Electrical Distribution Lines and Substations 4.8-36
4.8.6 References 4.8-40

4.9 Land Use, Recreation, and Visual Resources 4.9-1
4.9.1 Introduction 4.9-1
4.9.2 Impact Assessment Methodology 4.9-1
4.9.3 Potential Impacts 4.9-2
4.9.3.1 Land Ownership 4.9-2
4.9.3.2 Land Use 4.9-2
4.9.3.3 Recreation and Special Interest Areas 4.9-11
4.9.3.4 Visual Resources 4.9-11
4.9.4 Recommended Additional Mitigation 4.9-12
4.9.5 Connected Actions 4.9-12
4.9.5.1 Bakken Marketlink Project 4.9-12
4.9.5.2 Big Bend to Witten 230-Kilovolt (kV) Transmission Line 4.9-13
4.9.5.3 Electrical Distribution Lines and Substations 4.9-15
4.9.6 References 4.9-18

4.10 Socioeconomics 4.10-1
4.10.1 Introduction 4.10-1
4.10.2 Impact Assessment Methodology 4.10-1
4.10.3 Impacts 4.10-2
4.10.3.1 Construction 4.10-2
4.10.3.2 Operations 4.10-24

4.10.4 Recommended Additional Mitigation 4.10-27
4.10.5 Connected Actions 4.10-27
4.10.5.1 Bakken Marketlink 4.10-28
4.10.5.2 Big Bend to Witten 230-kV Transmission Line 4.10-32
4.10.5.3 Electrical Distribution Lines and Substations 4.10-36
4.10.6 References 4.10-39

4.11 Cultural Resources 4.11-1
4.11.1 Introduction 4.11-1
4.11.2 Impact Assessment Methodology 4.11-1
4.11.3 NRHP Eligibility, Effects, and Mitigation 4.11-2
4.11.4 Types of Potential Impacts 4.11-3
4.11.4.1 Construction 4.11-4
4.11.4.2 Operations 4.11-4
4.11.5 Potential Impacts to Identified Cultural Resources 4.11-5
4.11.5.1 Montana 4.11-5
4.11.5.2 South Dakota 4.11-9
4.11.5.3 Nebraska 4.11-12
4.11.5.4 North Dakota 4.11-15
4.11.5.5 Kansas 4.11-15
4.11.6 Recommended Additional Mitigation 4.11-15
4.11.7 Connected Actions 4.11-15
4.11.7.1 Bakken Marketlink Project 4.11-15
4.11.7.2 Big Bend to Witten 230-kV Transmission Line 4.11-15
4.11.7.3 Electrical Distribution Lines and Substations 4.11-16

4.12 Air Quality and Noise 4.12-1
4.12.1 Introduction 4.12-1
4.12.2 Impact Assessment Methodology 4.12-1
4.12.2.1 Air Quality 4.12-1
4.12.2.2 Noise 4.12-3
4.12.3 Potential Impacts 4.12-3
4.12.3.1 Air Quality 4.12-3
4.12.3.2 Greenhouse Gases 4.12-9
4.12.3.3 Noise 4.12-12
4.12.4 Recommended Additional Mitigation 4.12-19
4.12.4.1 Air Quality 4.12-19
4.12.4.2 Greenhouse Gases 4.12-20
4.12.4.3 Noise 4.12-20

4.12.5 Connected Actions 4.12-21
4.12.5.1 Bakken Marketlink Project 4.12-21
4.12.5.2 Big Bend to Witten 230-kV-Transmission Line 4.12-21
4.12.5.3 Electrical Distribution Lines and Substations 4.12-22
4.12.6 References 4.12-22

4.13 Potential Releases 4.13-1
4.13.1 Introduction 4.13-1
4.13.2 Historical Pipeline Incidents Analysis 4.13-4
4.13.2.1 Background 4.13-4
4.13.2.2 Objectives 4.13-5
4.13.2.3 Method 4.13-5
4.13.2.4 Pipeline Incident Information Sources 4.13-5
4.13.2.5 PHMSA Historical Data 4.13-10
4.13.2.6 Applicability of Crude Oil Data 4.13-16
4.13.3 Spill Impact Assessment 4.13-17
4.13.3.1 Spill Volumes and Potential Impact 4.13-17
4.13.3.2 Spill Propagation 4.13-19
4.13.3.3 Effect of Soil Type, Soil Cover, and Temperature on Flow 4.13-21
4.13.3.4 Types of Spill Impact 4.13-23
4.13.4 Potential Impacts 4.13-31
4.13.5 Recommended Additional Mitigation 4.13-64
4.13.5.1 PHMSA 57 Special Conditions 4.13-64
4.13.5.2 Spill Response 4.13-68
4.13.6 Connected Actions 4.13-80
4.13.6.1 Bakken Marketlink Project 4.13-80
4.13.6.2 Big Bend to Witten 230-kV Transmission Line 4.13-80
4.13.6.3 Electrical Distribution Lines and Substations 4.13-80
4.13.7 References 4.13-80

4.14 Climate Change Impacts on the Proposed Project 4.14-1
4.14.1 Setting and Context 4.14-1
4.14.1.1 Historical Climate Trends 4.14-1
4.14.1.2 Projected Climate Change Effects 4.14-2
4.14.2 Impacts on the Proposed Project 4.14-7
4.14.2.1 Construction 4.14-7
4.14.2.2 Operation 4.14-7
4.14.3 References 4.14-8

4.15 Cumulative Effects Assessment 4.15-1
4.15.1 Methods and Scope of the Cumulative Impacts Analysis 4.15-2
4.15.2 Past, Present, and Reasonably Foreseeable Projects 4.15-3
4.15.2.1 Cumulative Impacts from Past Projects 4.15-4
4.15.2.2 Cumulative Impacts from Present Projects 4.15-15
4.15.2.3 Cumulative Impacts from Reasonably Foreseeable Future Projects 4.15-18
4.15.2.4 Cumulative Impacts from Connected Actions 4.15-21
4.15.2.5 Summary of Key Geographically Overlapping Project Areas 4.15-21
4.15.3 Cumulative Impacts by Resource 4.15-25
4.15.3.1 Geology 4.15-26
4.15.3.2 Soils 4.15-32
4.15.3.3 Water Resources 4.15-34
4.15.3.4 Wetlands 4.15-38
4.15.3.5 Terrestrial Vegetation 4.15-43
4.15.3.6 Wildlife 4.15-46
4.15.3.7 Fisheries 4.15-49
4.15.3.8 Threatened and Endangered Species 4.15-51
4.15.3.9 Land Use, Recreation, and Visual Resources 4.15-56
4.15.3.10 Socioeconomics 4.15-63
4.15.3.11 Cultural Resources 4.15-65
4.15.3.12 Air Quality and Noise 4.15-68
4.15.3.13 Potential Releases 4.15-108
4.15.4 Extraterritorial Concerns 4.15-109
4.15.4.1 Canadian National Energy Board Environmental Analysis of the Proposed Project 4.15-110
4.15.4.2 Influence of the Proposed Project on Oil Sands Development in Canada 4.15-110
4.15.4.3 Environmental Effects of Oil Sands Development in Alberta 4.15-111
4.15.4.4 Protected Bird Species in Canada 4.15-114
4.15.5 References 4.15-117

4.16 Summary of Impacts 4.16-1

5.0 ALTERNATIVES 5-1

5.1 No Action Alternatives 5.1-1
5.1.1 Status Quo Scenario 5.1-3
5.1.2 Rail/Pipeline Scenario 5.1-3
5.1.2.1 Geology 5.1-5
5.1.2.2 Soils 5.1-6
5.1.2.3 Water Resources 5.1-6
5.1.2.4 Wetlands 5.1-9

5.1.2.5 Terrestrial Vegetation 5.1-10
5.1.2.6 Wildlife 5.1-11
5.1.2.7 Fisheries 5.1-12
5.1.2.8 Threatened and Endangered Species 5.1-14
5.1.2.9 Land Use, Recreation, and Visual Resources 5.1-15
5.1.2.10 Socioeconomics 5.1-16
5.1.2.11 Cultural Resources 5.1-22
5.1.2.12 Air and Noise 5.1-23
5.1.2.13 Climate Change Effects on the Scenario 5.1-27
5.1.2.14 Potential Risk and Safety 5.1-28
5.1.3 Rail/Tanker Scenario 5.1-30
5.1.3.1 Geology 5.1-32
5.1.3.2 Soils 5.1-33
5.1.3.3 Water Resources 5.1-34
5.1.3.4 Wetlands 5.1-36
5.1.3.5 Terrestrial Vegetation 5.1-36
5.1.3.6 Wildlife 5.1-37
5.1.3.7 Fisheries 5.1-38
5.1.3.8 Threatened and Endangered Species 5.1-40
5.1.3.9 Land Use, Recreation, and Visual Resources 5.1-40
5.1.3.10 Socioeconomics 5.1-41
5.1.3.11 Cultural Resources 5.1-46
5.1.3.12 Air and Noise 5.1-46
5.1.3.13 Climate Change Effects on the Scenario 5.1-49
5.1.3.14 Potential Risk and Safety 5.1-51
5.1.4 References 5.1-56

5.2 Route Alternatives 5.2-1
5.2.1 2011 Steele City Alternative 5.2-2
5.2.1.1 Geology 5.2-5
5.2.1.2 Soils 5.2-7
5.2.1.3 Water Resources 5.2-8
5.2.1.4 Wetlands 5.2-11
5.2.1.5 Terrestrial Vegetation 5.2-15
5.2.1.6 Wildlife 5.2-17
5.2.1.7 Fisheries 5.2-20
5.2.1.8 Threatened and Endangered Species 5.2-22
5.2.1.9 Land Use, Recreation, and Visual Resources 5.2-26
5.2.1.10 Socioeconomics 5.2-29
5.2.1.11 Cultural Resources 5.2-32

5.2.1.12 Air Quality and Noise 5.2-34
5.2.1.13 Climate Change 5.2-35
5.2.2 I-90 Corridor Alternative 5.2-35
5.2.2.1 Geology 5.2-36
5.2.2.2 Soils 5.2-37
5.2.2.3 Water Resources 5.2-39
5.2.2.4 Wetlands 5.2-41
5.2.2.5 Terrestrial Vegetation 5.2-43
5.2.2.6 Wildlife 5.2-45
5.2.2.7 Fisheries 5.2-48
5.2.2.8 Threatened and Endangered Species 5.2-49
5.2.2.9 Land Use, Recreation, and Visual Resources 5.2-52
5.2.2.10 Socioeconomics 5.2-54
5.2.2.11 Cultural Resources 5.2-58
5.2.2.12 Air Quality and Noise 5.2-59
5.2.2.13 Climate Change 5.2-60
5.2.3 References 5.2-61

5.3 Comparison of Alternatives 5.3-1
5.3.1 Proposed Project Versus Major Route Alternatives 5.3-1
5.3.2 Proposed Project Versus No Action Scenarios 5.3-2

6.0 LIST OF PREPARERS 6-1

7.0 DISTRIBUTION LIST—SUPPLEMENTAL EIS OR EXECUTIVE SUMMARY 7-1

8.0 INDEX 8-1

LIST OF APPENDICES

	Title	Provided in Print Version	Provided only in Electronic Version
A	Governor Approval of the Keystone XL Project in Nebraska	x	
B	PHMSA 57 Special Conditions for Keystone XL and Keystone Compared to 49 CFR 195	x	
C	Market Analysis Supplemental Information	x	
D	Waterbody Crossing Tables and Required Crossing Criteria for Reclamation Facilities	x	
E	Record of Consultation	x	
F	Scoping Summary Report	x	
G	Construction, Mitigation, and Reclamation Plan (CMRP)	x	
H	2012 Biological Assessment	x	
I	Spill Prevention, Control, and Countermeasure Plan, and Emergency Response Plan Sections		x
J	Basin Electric Big Bend to Witten 230-kV Transmission Project Routing Report		x
K	Historical Pipeline Incident Analysis	x	
L	Oil and Gas Wells within 1320 ft of Proposed Right-of-Way		x
M	Soil Summary for Montana, South Dakota, and Nebraska		x
N	Supplemental Information for Compliance with MEPA Attachments: 1. MDEQ Environmental Specifications for the Proposed Keystone XL Project 2. MDEQ Requirements of Short-term Narrative Water Quality 3. Keystone Rate Study and Responses to Public Comment		x
O	Socioeconomics	x	
P	Crude Oil Material Safety Data Sheets	x	
Q	Pipeline Risk Assessment and Environmental Consequence Analysis		x
R	Construction/Reclamation Plans and Documentation		x
S	Pipeline Temperature Effects Study		x
T	Literature Review	x	
U	Screening Level Oil Spill Modeling	x	
V	Past, Present, and Reasonably Foreseeable Future Project Descriptions	x	

	Title	Provided in Print Version	Provided only in Electronic Version
W	Life-Cycle Greenhouse Gas Emissions of Petroleum Products from WCSB Oil Sands Crudes Compared with Reference Crudes	x	
X	Canadian Environmental Assessment Act		x
Y	Pipeline Construction in Sand Hills Native Rangelands		x
Z	Estimated Criteria Pollutants, Noise, and GHG Emissions	x	

LIST OF TABLES

Table 1.4-1 Comparison of 2010 and 2012 AEO U.S. Product Import and Export Volumes 1.4-15
Table 1.4-2 Comparison of Transport Costs for Routes to Asian Markets 1.4-16
Table 1.4-3 Comparison of PADD 3 Crude Oil Imports and Sources, 2009 vs. 2012 Year to Date 1.4-19
Table 1.4-4 Heavy Crude Import Trends in PADD 3, 2009 and 2012 (through June 2012), mmbpd 1.4-19
Table 1.4-5 Gulf Coast Area Refiners Heavy Crude Processing, January–June 2012 ..... 1.4-20
Table 1.4-6 U.S. Heavy and Canadian Heavy Crude Oil Refined 1.4-22
Table 1.4-7 Major New Crude Oil Transportation Expansion Projects, Late 2011 to Current 1.4-29
Table 1.4-8 Rail Off-Loading Projects Providing Access to Gulf Coast Refineries 1.4-34
Table 1.4-9 Publically Reported Producers Currently Shipping or Announced Shipping WCSB Crude by Rail 2013, bpd 1.4-43
Table 1.4-10 Economic Threshold for New Oil Sands Projects 1.4-52
Table 1.4-11 Estimated Potential Change in Oil Sands Production per $5 Increase in Cost per barrel of Oil in Different Outlooks 1.4-56
Table 1.4-12 Delivered Costs of WCSB Heavy Crude Compared to Maya Crude 1.4-61
Table 1.8-1 Summary Comments Received on Environmental Issues during the Public Scoping Process for the Proposed Project 1.8-3
Table 1.9-1 Permits, Licenses, Approvals, and Consultation Requirements for the Proposed Project 1.9-1
Table 2.1-1 Ancillary Facilities Supporting Operations by State 2.1-1
Table 2.1-2 Pipeline Route Modifications 2.1-2
Table 2.1-3 Summary of Lands Affected 2.1-8
Table 2.1-4 Borrow Material Requirements by State 2.1-16
Table 2.1-5 Total Borrow Material Requirements by Facility Type 2.1-16

Table 2.1-6 Aboveground Facilities 2.1-17
Table 2.1-7 Proposed Project Pump Station Locations 2.1-19
Table 2.1-8 Intermediate Mainline Valve Locations 2.1-22
Table 2.1-9 Dimensions and Acreage of Typical Additional Temporary Workspace Areas 2.1-24
Table 2.1-10 Locations and Acreages of Proposed Pipe Storage Sites, Railroad Sidings, and Contractor Yards 2.1-25
Table 2.1-11 Construction Camp Permits and Regulations 2.1-28
Table 2.1-12 Pipe Design Parameters and Specification 2.1-36
Table 2.1-13 Pipeline Construction Spreads Associated with the Proposed Project 2.1-39
Table 2.1-14 Minimum Equipment Required for Selected Construction Activities 2.1-44
Table 2.1-15 Minimum Pipeline Cover 2.1-46
Table 2.1-16 Structures Located Within 25 Feet and 500 Feet of the Construction ROW 2.1-54
Table 2.1-17 Waterbodies Crossed Using the Horizontal Directional Drilling Method 2.1-58
Table 2.1-18 Representative Cross-Country Construction Times Based on Estimates of Schedule 2.1-62
Table 2.1-19 Electrical Power Supply Requirements for Pump Stations 2.1-82
Table 2.2-1 Crude Oil by Rail to Oklahoma/Pipeline to Gulf Coast Area Scenario: New Construction and Specifications 2.2-15
Table 2.2-2 Estimated Cost of New Facilities and Estimated Jobs Created for Crude by Rail/Pipeline Option 2.2-18
Table 2.2-3 Rail Costs from Lloydminster, SK to Stroud, OK, and Bakken Crude Oil from Epping, ND to Stroud, OK 2.2-18
Table 2.2-4 Crude Oil by Rail to Prince Rupert/Tanker to Gulf Coast Area Scenario: New Construction and Specifications 2.2-23
Table 2.2-5 Terminal Facility Acreage 2.2-24
Table 2.2-6 Suezmax Tanker Dimensions and Capacities 2.2-25
Table 2.2-7 Rail/Tanker Costs from the Lloydminster, Saskatchewan, to the Gulf Coast Area via the Panama Canal 2.2-26
Table 2.2-8 Rail/Barge Costs from Hardisty, Alberta to the Gulf Coast Area 2.2-28
Table 2.2-9 Phase I Alternatives Screening 2.2-45
Table 2.2-10 Phase II Detailed Screening Summary 2.2-50
Table 2.2-11 Keystone XL 2011 Final EIS Alternate Ancillary Facilities by State 2.2-55
Table 2.2-12 I-90 Corridor Alternative Estimated Aboveground Facilities by State 2.2-59
Table 3.1-1 Physiographic Characteristics of Ecoregions Crossed in Montana by the Proposed Project Route 3.1-2
Table 3.1-2 Physiographic Characteristics of Ecoregions Crossed in South Dakota by the Proposed Route 3.1-5
Table 3.1-3 Physiographic Characteristics of Ecoregions Crossed in Nebraska by the Proposed Project Route 3.1-7

Table 3.1-4 Paleontological Surveys and Reports 3.1-11
Table 3.1-5 Paleontological Resources Identified Along Proposed Project Corridor in Montana and South Dakota 3.1-12
Table 3.1-6 Locations within LSHR High-Risk Category along the Proposed Project Corridor 3.1-23
Table 3.1-7 Limestone Areas Crossed by the Proposed Project Corridor with the Potential for Karst Features 3.1-24
Table 3.2-1 Approximate Miles of Soils with Specific Characteristics Crossed by the Proposed Project Route 3.2-3
Table 3.2-2 Approximate Acreage of Soils with Specific Characteristics Crossed by the Proposed Project Route 3.2-3
Table 3.3-1 Water-Bearing Zones Less than 50 Feet Below Ground Surface Beneath the Proposed Pipeline Right-of-Way 3.3-8
Table 3.3-2 Groundwater Quality of Select Subsurface Aquifers 3.3-20
Table 3.3-3 Streams and Rivers Crossed by Proposed Pipeline in Montana with State Water Quality Designations or Use Designations 3.3-28
Table 3.3-4 Impaired or Contaminated Waterbodies in Montana 3.3-29
Table 3.3-5 Streams and Rivers Crossed by Proposed Pipeline in South Dakota with State Water Quality Designations or Use Designations 3.3-32
Table 3.3-6 Impaired or Contaminated Waterbodies in South Dakota 3.3-33
Table 3.3-7 Streams and Rivers Crossed by Proposed Pipeline in Nebraska with State Water Quality Designations or Use Designations 3.3-35
Table 3.3-8 Impaired or Contaminated Waterbodies in Nebraska 3.3-38
Table 3.3-9 Designated Floodplain Areas Crossed by the Proposed Pipeline Route in Montana 3.3-39
Table 3.3-10 Designated Floodplain Areas Crossed by the Proposed Pipeline Route in South Dakota 3.3-40
Table 3.3-11 Designated Floodplain Areas Crossed by the Proposed Pipeline Route in Nebraska 3.3-40
Table 3.4-1 Description of Wetland Types in Proposed Project Area 3.4-2
Table 3.4-2 Wetland Permitting Summary 3.4-12
Table 3.5-1 USEPA Level III Ecoregions Crossed by Proposed Project Facilities 3.5-3
Table 3.5-2 USEPA Level III and IV Ecoregions Crossed by Proposed Project Facilities . 3.5-4
Table 3.5-3 Land Cover Types with Ecosystem Designations Crossed by the Proposed Pipeline Route 3.5-15
Table 3.5-4 Land Cover Types with Ecosystem Designations in which Proposed Ancillary Facilities in North Dakota and Kansas would be Located 3.5-19
Table 3.5-5 Federal, State, or Local Introduced, Invasive, and Noxious Weeds Potentially Occurring Along the Proposed Project Route 3.5-31
Table 3.6-1 Habitat Types Located within the Proposed Project ROW 3.6-1
Table 3.6-2 Big Game with Habitat within the Proposed Project Area 3.6-2

Table 3.6-3 Small Game and Furbearers with Habitat within the Proposed Project Area ... 3.6-4
Table 3.6-4 Birds Identified within the Counties of the Proposed Project Area ... 3.6-5
Table 3.6-5 Non-Game Mammals Potentially Present in Proposed Project Area ... 3.6-8
Table 3.6-6 Reptiles Potentially Present within the Proposed Project Area ... 3.6-11
Table 3.6-7 Amphibians Potentially Present within the Proposed Project Area ... 3.6-12
Table 3.7-1 Common Recreational and Commercial Fish Associated with Proposed Project Route Stream Crossings ... 3.7-3
Table 3.7-2 Recreational and Commercial Fish Spawning Periods and Habitats ... 3.7-5
Table 3.7-3 Proposed Perennial Stream Crossings along the Proposed Project Route ... 3.7-7
Table 3.8-1 Summary of Federally Protected and Candidate Species Included in the 2012 BA and their State Status ... 3.8-5
Table 3.8-2 BLM Sensitive Species Potentially Occurring in the Proposed Project Area in Montana ... 3.8-21
Table 3.8-3 State Protected Animals and Plants Potentially Occurring along the Proposed Project Route ... 3.8-25
Table 3.8-4 Animals and Plants of Conservation Concern Potentially Occurring along the Proposed Project ROW ... 3.8-35
Table 3.9-1 Land Ownership along the Proposed Project Route (miles) ... 3.9-2
Table 3.9-2 Land Use Crossed by the Proposed Project Route (miles) ... 3.9-2
Table 3.9-3 State Harvested Acreages of Most Commonly Harvested Crops, 2007 ... 3.9-3
Table 3.9-4 USFWS, USDA, and Other Easements and Agreements Crossed by the Proposed Project Route ... 3.9-4
Table 3.9-5 Recreation and Special Interest Areas Crossed by the Proposed Project Route ... 3.9-6
Table 3.9-6 Perennial Waterbodies with Recreational Use Designations ... 3.9-6
Table 3.9-7 VRM Classifications of Land Crossed by the Proposed Project Route in Montana ... 3.9-9
Table 3.9-8 Land Use Crossed by the Bakken Marketlink Project ... 3.9-9
Table 3.9-9 Land Use Crossed by the Big Bend to Witten 230-kV Transmission Line Applicant Preferred Route ... 3.9-10
Table 3.9-10 Land Ownership along the Proposed Power Distribution Line ROWs (Miles) ... 3.9-11
Table 3.9-11 Land Use along the Proposed Power Distribution Line ROWs (Miles) ... 3.9-12
Table 3.9-12 Recreation and Special Interest Areas Likely to be Crossed by Power Distribution Lines ... 3.9-12
Table 3.10-1 Project Area States and Counties ... 3.10-3
Table 3.10-2 Proposed Pipeline Route Length by County and State ... 3.10-4
Table 3.10-3 Communities within Two Miles of the Project Area ... 3.10-7
Table 3.10-4 United States and State Populations and Population Densities, 2000 and 2010 ... 3.10-8

Table 3.10-5 County Populations and Population Densities, 2000 and 2010 ..... 3.10-8
Table 3.10-6 Community Populations, 2000 and 2010 ..... 3.10-9
Table 3.10-7 Housing Resources for Counties in the Proposed Project Area 3.10-10
Table 3.10-8 Economic Corridor Counties 3.10-13
Table 3.10-9 Median Household Income, Unemployment Rates, and Labor Force by County 3.10-15
Table 3.10-10 Earnings and Employment in the Economic Corridor 3.10-17
Table 3.10-11 Earnings by Industry in the Economic Corridor 3.10-20
Table 3.10-12 Employment by Industry in the Economic Corridor 3.10-22
Table 3.10-13 Earnings and Employment in the Rest of Montana, South Dakota, and Nebraska 3.10-24
Table 3.10-14 Block Groups with Meaningfully Greater Minority Populations 3.10-31
Table 3.10-15 Census Tracts with Meaningfully Greater Low-Income Populations 3.10-33
Table 3.10-16 Existing Public Services and Facilities in the Project Area 3.10-34
Table 3.10-17 Overview of General Revenue Resources for State and Local Government in the Proposed Project Area, 2008-2009 ..... 3.10-37
Table 3.10-18 Property Tax in Project Area Counties, 2010 ..... 3.10-38
Table 3.10-19 Intersections of Proposed Project with Roads, by State 3.10-40
Table 3.10-20 Intersections of Proposed Project with Roads, by State 3.10-42
Table 3.10-21 Major Roads Adjacent to Ancillary Facilities 3.10-42
Table 3.10-22 Intersection of Proposed Project with Railroads, by State 3.10-43
Table 3.10-23 Roads that would be Crossed by the Big Bend to Witten 230-kV Transmission Line 3.10-46
Table 3.10-24 Electrical Distribution Lines and Substations States and Counties 3.10-46
Table 3.10-25 Population and Housing for Non-Pipeline Corridor Counties 3.10-47
Table 3.10-26 Median Household Income, Unemployment Rate, and Labor Force for Connected Action Counties 3.10-47
Table 3.10-27 Existing Public Services and Facilities for Non- Pipeline Corridor Counties 3.10-48
Table 3.10-28 Roads that would be Crossed by Electrical Distribution Lines 3.10-48
Table 3.11-1 Area of Potential Effect for the Proposed Project by State 3.11-6
Table 3.11-2 Cultural Resources Identified in Montana within the Project APE 3.11-8
Table 3.11-3 Cultural Resources Identified in South Dakota within the Project APE 3.11-16
Table 3.11-4 Cultural Resources Identified in Nebraska within the Project APE 3.11-22
Table 3.11-5 Cultural Resources Identified in Kansas within the Project APE 3.11-27
Table 3.11-6 Tribes Consulted for the Proposed Project 3.11-30
Table 3.11-7 List of Tribes Participating in Traditional Cultural Property Studies within the Proposed Project 3.11-33
Table 3.12-1 Representative Climate Data in the Vicinity of the Proposed Pipeline 3.12-4
Table 3.12-2 Federal and Montana Ambient Air Quality Standards 3.12-5

Table 3.12-3 2011 Regional Background Air Quality Concentrations for the Proposed Project 3.12-6
Table 3.12-4 Estimated Criteria Pollutant Emissions Per Back-up Emergency Generator at Construction Camps 3.12-8
Table 3.12-5 Estimated HAP Emissions per Back-up Emergency Diesel Generator at Construction Camps 3.12-12
Table 3.12-6 Existing Noise Levels for the Proposed Project 3.12-22
Table 3.12-7 Structures Near the Proposed Project Construction ROW 3.12-24
Table 3.12-8 Structures within 0.5 and 1 Mile of Proposed Project Pump Stations 3.12-25
Table 3.13-1 Summary of General Characteristics for Types of Crude Oil that would be Transported by the Proposed Project 3.13-3
Table 3.13-2 Comparison of Global Crude Oil Characteristics 3.13-5
Table 4.1-1 Potential Ripping Locations for the Proposed Project 4.1-2
Table 4.2-1 Soil Criteria for Determining Special Handling Techniques in Cultivated Land and High-Quality Prairie or Rangeland 4.2-5
Table 4.3-1 Summary of Impacts to Surface Water Resources by State 4.3-12
Table 4.3-2 Potential Hydrostatic Test Water Sources along the Project Route 4.3-16
Table 4.3-3 Ancillary Facilities Crossing Designated Floodplain Areas for the Proposed Pipeline Route 4.3-19
Table 4.4-1 Estimated Wetlands Affected by Proposed Project ROW and Ancillary Facilities 4.4-4
Table 4.4-2 Estimated Permanent Wetland Impacts 4.4-5
Table 4.4-3 Estimated Impacts to Wetlands Associated with the Electrical Distribution Lines and Substations 4.4-16
Table 4.5-1 Summary of Estimated Impacts on Vegetation Communities 4.5-3
Table 4.5-2 Estimated Impacts on Vegetation Communities of Conservation Concern Occurring along the Proposed Project Route 4.5-11
Table 4.5-3 Summary of Impacts on Vegetation Communities Crossed by Proposed Bakken Market Link Project 4.5-17
Table 4.5-4 Summary of Impacts on Vegetation Communities Crossed by Proposed Big Bend to Witten 230-kV Transmission Line Preferred Route 4.5-18
Table 4.5-5 Estimated Impacts on Vegetation Communities Crossed by Proposed Electrical Distribution Lines for the Proposed Project 4.5-19
Table 4.6-1 Important Wildlife Habitats within or near the Proposed Project Area 4.6-3
Table 4.6-2 Habitat Types and Related Fragmentation Issues 4.6-5
Table 4.6-3 General Spatial Buffer Restrictions and Nesting Seasons for Raptors Potentially Present in the Project Area 4.6-11
Table 4.6-4 Seasonal Timing Restrictions and Buffer Distances for Big Game Animals, Game Birds, and Raptors 4.6-13
Table 4.7-1 Proposed Perennial Stream Crossings along the Proposed Project Route 4.7-4

Table 4.8-1 Summary of ESA Federally Protected and Candidate Species Potentially Occurring along the Proposed Project Route 4.8-3
Table 4.8-2 State-Listed Animals and Plants Potentially Occurring along the Proposed Project Route 4.8-25
Table 4.8-3 Species of Conservation Concern 4.8-34
Table 4.9-1 Land Ownership Affected by the Proposed Project (acres) 4.9-2
Table 4.9-2 Land Use Affected by the Proposed Project (Acres) 4.9-3
Table 4.9-3 Prime Farmland Affected by the Proposed Project (Acres) 4.9-6
Table 4.9-4 Land Use Affected by the Bakken Marketlink Project 4.9-13
Table 4.9-5 Land Use Affected by Construction of the Big Bend to Witten 230-kV Transmission Line, Applicant Preferred Route 4.9-13
Table 4.9-6 Land Ownership Affected by the Electrical Distribution Lines (Acres) 4.9-15
Table 4.9-7 Assumptions for Power Distribution Line Land Use Impact Estimates 4.9-16
Table 4.9-8 Land Use Affected by Construction and Operation of Power Distribution Lines (Acres) 4.9-16
Table 4.9-9 Typical Disturbance Areas for Power Line Operation in Forested Areas 4.9-17
Table 4.10-1 Proposed Project Construction by State 4.10-2
Table 4.10-2 Proposed Construction Work Camp Locations 4.10-4
Table 4.10-3 Selected Characteristics of Proposed Project Construction Activity Occurring Within the United States 4.10-6
Table 4.10-4 Total Employment Supported by Construction of the Proposed Project (average annual jobs) 4.10-7
Table 4.10-5 Total U.S. Employment and Earnings by Industry Supported by Construction of the Proposed Project 4.10-8
Table 4.10-6 Total Earnings Supported by Construction of the Proposed Project (thousands of 2010 dollars) 4.10-9
Table 4.10-7 Gross State Product, Gross Domestic Product, and Earnings Supported by Construction of the Proposed Project (millions of 2010 dollars) 4.10-10
Table 4.10-8 Comparison of Gross State Product (GSP) and Employment Supported by Construction of the Proposed Project in The Perryman Group (TPG) and in the Supplemental EIS 4.10-11
Table 4.10-9 Locations of Construction Facilities Relative to Meaningfully Greater Populations 4.10-12
Table 4.10-10 Health Professional Shortage Areas and Medically Underserved Areas/ Populations in the Socioeconomic Analysis Area 4.10-15
Table 4.10-11 Estimated Property Tax from Proposed Project in Situs Counties Compared to Total County Property Tax Revenue in 2010 (in thousands of 2010 dollars) 4.10-25
Table 4.10-12 Selected Characteristics of Connected Actions Construction Activity Occurring Within the United States 4.10-28

Table 4.10-13 Total Employment Supported by Construction of the Bakken Marketlink Project (average annual jobs) ... 4.10-29
Table 4.10-14 Total Earnings Supported by Construction of the Bakken Marketlink Project (thousands of 2010 dollars) ... 4.10-29
Table 4.10-15 Total Employment Supported by Construction of the Big Bend to Witten 230-kV Transmission Line (average annual jobs) ... 4.10-33
Table 4.10-16 Total Earnings Supported by Construction of the Big Bend to Witten 230-kV Transmission Line (thousands of 2010 dollars) ... 4.10-33
Table 4.10-17 Total Employment Supported by Construction of Electrical Distribution Lines and Substations (average annual jobs) ... 4.10-37
Table 4.10-18 Total Earnings Supported by Construction of Electrical Distribution Lines and Substations (thousands of 2010 dollars) ... 4.10-37
Table 4.11-1 Cultural Resources within the Project Construction Footprint of Montana ... 4.11-6
Table 4.11-2 Cultural Resources within the Project Construction Footprint of South Dakota ... 4.11-10
Table 4.11-3 Cultural Resources within the Project Construction Footprint of Nebraska ... 4.11-12
Table 4.12-1 Construction Equipment per Spread for the Proposed Project ... 4.12-5
Table 4.12-2 Summary of Criteria Pollutants from Proposed Project Construction ... 4.12-6
Table 4.12-3 Summary of Hazardous Air Pollutants from Proposed Project Construction ... 4.12-8
Table 4.12-4 Summary of Criteria Pollutants from Proposed Project Operation ... 4.12-9
Table 4.12-5 Estimated Direct Construction Emissions for the Proposed Project ... 4.12-10
Table 4.12-6 Direct and Indirect Annual Operating Emissions for the Proposed Project ... 4.12-12
Table 4.12-7 Typical Noise Levels for Construction ... 4.12-13
Table 4.12-8 Predicted Noise Levels at Closest Receptors from Uncontrolled HDD Activities ... 4.12-15
Table 4.12-9 Predicted Noise Levels at Closest Noise Receptors from each Pump Station ... 4.12-18
Table 4.13-1 Spill Volume Distribution by Pipeline Component ... 4.13-12
Table 4.13-2 Spill Impact Buffers ... 4.13-27
Table 4.13-3 Summary of Key Input Values Used in HSSM Simulation ... 4.13-29
Table 4.13-4 Length of Potential Plumes ... 4.13-30
Table 4.13-5 Potential Impact to Resources ... 4.13-32
Table 4.13-6 Total Estimated Erodible and Prime Farmland Soils in Potential Spill Areas (acres) ... 4.13-36
Table 4.13-7 Total Estimated Vegetation Community Acreage in Potential Small Spill Areas ... 4.13-39
Table 4.13-8 Total Estimated Vegetation Community Acreage in Potential Medium Spill Areas ... 4.13-39

Table 4.13-9 Total Estimated Vegetation Community Acreage in Potential Large Spill Areas 4.13-39
Table 4.13-10 Total Estimated Acreage of Habitat in Potential Surface Spill Areas 4.13-40
Table 4.13-11 Number of Previously Identified Cultural Resource Sites in Potential Spill Buffers 4.13-44
Table 4.13-12 Total Number of Wells in Potential Overland Flow Spill Impact Areas 4.13-46
Table 4.13-13 Total Number of Wells in Potential Groundwater Spill Impact Areas 4.13-46
Table 4.13-14 Total Number of Wells in Combined Potential Combined Overland/ Groundwater Spill Impact Areas 4.13-47
Table 4.13-15 Waterbody Crossings by the Proposed Project 4.13-49
Table 4.13-16 Estimated Total Pipeline Mileage that Could Affect Identified Waterbodies .. 4.13-50
Table 4.13-17 Estimated Surface Water Benzene Concentrations Resulting from a Diluted Bitumen Spill 4.13-51
Table 4.13-18 Estimated Surface Water Benzene Concentrations Resulting from a Synthetic Crude Spill 4.13-51
Table 4.13-19 Acute Toxicity of Aromatic Hydrocarbons to Freshwater Organisms 4.13-54
Table 4.13-20 Acute Toxicity of Crude Oil Hydrocarbons to *Daphnia magna* 4.13-55
Table 4.13-21 Chronic Toxicity of Benzene to Freshwater Biota 4.13-56
Table 4.13-22 Comparison of Estimated Benzene Stream Concentrations Following a Diluted Bitumen Spill to the Chronic Toxicity Threshold for Aquatic Life (1.4 ppm) 4.13-57
Table 4.13-23 Comparison of Estimated Benzene Stream Concentrations Following a Synthetic Crude Spill to the Acute Toxicity Threshold for Aquatic Life (1.4 ppm) 4.13-58
Table 4.13-24 Comparison of Estimated Benzene Stream Concentrations Following a Diluted Bitumen Spill to the Acute Toxicity Threshold for Aquatic Life (17.4 ppm) 4.13-59
Table 4.13-25 Total Estimated Wetlands Acreage in Potential Surface Spill Areas 4.13-61
Table 4.13-26 Special Conditions as Barriers to Threats 4.13-65
Table 4.13-27 Barrier Assessment of Special Condition Threat Mitigations 4.13-66
Table 4.13-28 Response Time Requirements of 49 CFR Part 194.115 ..... 4.13-72
Table 4.13-29 Potentially Applicable Federal and State Soil, Surface Water, and Groundwater Clean-up Regulations 4.13-76
Table 4.14-1 Historical Changes in Temperature by State (1895-2009) 4.14-1
Table 4.14-2 Projected Changes in Average Mean Daily Maximum Temperatures (2010-2099) 4.14-5
Table 4.14-3 Projected Changes in Precipitation by Climate Region (2010-2099) 4.14-6
Table 4.15-1 Representative Past Projects Considered in the Cumulative Effects Assessment 4.15-4

Table 4.15-2 Representative Present Projects Considered in the Cumulative Effects Assessment 4.15-16
Table 4.15-3 Representative Future Projects Considered in the Cumulative Effects Assessment 4.15-19
Table 4.15-4 CEA Matrix—Geology 4.15-26
Table 4.15-5 CEA Matrix—Soils 4.15-32
Table 4.15-6 CEA Matrix—Surface Water 4.15-35
Table 4.15-7 CEA Matrix—Groundwater/Hydrogeology 4.15-37
Table 4.15-8 CEA Matrix—Wetlands 4.15-39
Table 4.15-9 CEA Matrix—Terrestrial Vegetation 4.15-43
Table 4.15-10 CEA Matrix—Wildlife 4.15-47
Table 4.15-11 CEA Matrix—Fisheries 4.15-49
Table 4.15-12 CEA Matrix—Threatened and Endangered Species 4.15-52
Table 4.15-13 CEA Matrix—Land Use, Recreation, and Visual Resources 4.15-56
Table 4.15-14 CEA Matrix—Socioeconomics 4.15-63
Table 4.15-15 CEA Matrix—Cultural Resources 4.15-66
Table 4.15-16 CEA Matrix—Air Quality and Noise 4.15-68
Table 4.15-17 PADD 2 Refinery Crude Capacity: 2012 ..... 4.15-72
Table 4.15-18 PADD 3 Refinery Crude Capacity: 2012 ..... 4.15-73
Table 4.15-19 Net Emissions for the Motiva Refinery Expansion 4.15-77
Table 4.15-20 Primary and Additional Studies Evaluated 4.15-85
Table 4.15-21 Summary of Key Study Design Features that Influence GHG Results 4.15-89
Table 4.15-22 GHG Emissions for Producing Gasoline from Different Crude Sources from NETL 2009 and Estimates of the Impact of Key Assumptions on the Oil Sands-U.S. Average Differential 4.15-92
Table 4.15-23 Petroleum Coke and Coal Heating Values, Carbon Contents, and CO_2 Emissions per Unit Energy from USEPA (2012b) 4.15-96
Table 4.15-24 Incremental Annual GHG Emissions of Displacing 100,000 Barrels per Day of Each Reference Crude with WCSB Oil Sands ($MMTCO_2e$) by Study 4.15-104
Table 4.15-25 Waterbirds and Landbirds of Conservation Concern Present in Alberta's Oil Sands Lease Areas 4.15-115
Table 4.15-26 Federally Protected Bird Species of the Proposed Project 4.15-116
Table 4.16-1 Summary of Potential Impacts 4.16-1
Table 5.1.-1 Potential Impacts to Terrestrial Vegetation by Landcover Type under the Rail/Pipeline Scenario 5.1-10
Table 5.1-2 Common Representative Species of the Saskatchewan River 5.1-13
Table 5.1-3 Representative Fish Species in the Stroud Area 5.1-13
Table 5.1-4 U.S. States and Counties and Canadian Provinces/Census Divisions within the Rail/Pipeline Scenario—Canadian National Route 5.1-17

Table 5.1-5 U.S. States and Counties and Canadian Provinces/Census Divisions within the Rail/Pipeline Scenario—Canadian Pacific Route 5.1-17
Table 5.1-6 Rail/Pipeline Corridor Populations 5.1-18
Table 5.1-7 Comparison of Criteria Pollutant Emissions for the Rail/Pipeline Scenario and Proposed Project over a 50-Year Period 5.1-24
Table 5.1-8 Estimated Indirect Greenhouse Gas Electricity Emissions from the Rail/ Pipeline Scenario 5.1-25
Table 5.1-9 Historical Changes in Temperature by State (1895-2009) 5.1-27
Table 5.1-10 Comparative Statistics for Hazardous Material Transportation Incident Rates (2005-2009) 5.1-29
Table 5.1-11 Potential Impacts to Terrestrial Vegetation by Landcover Type under the Rail/Tanker Scenario 5.1-37
Table 5.1-12 Fish Species Relevant to Prince Rupert Facilities 5.1-39
Table 5.1-13 U.S. States and Counties and Canadian census Divisions affected by the Rail/Tanker Scenario 5.1-41
Table 5.1-14 Population Affected Under the Rail/Tanker Scenario 5.1-42
Table 5.1-15 Comparison of Criteria Pollutant Emissions for the Rail/Tanker Scenario and Proposed Project over a 50-Year Period 5.1-48
Table 5.1-16 Estimated Indirect Greenhouse Gas Electricity Emissions under the Rail/ Tanker Scenario 5.1-50
Table 5.1-17 Global Sea Level Rise Projections 5.1-51
Table 5.2-1 Geology: Comparison of the 2011 Steele City Alternative and Proposed Project 5.2-5
Table 5.2-2 Soils: Comparison of the Steele City Alternative and Proposed Project 5.2-7
Table 5.2-3 Surface Water: Comparison of the Steele City Alternative and Proposed Project 5.2-10
Table 5.2-4 Wetlands: Comparison of the Steele City Alternative and Proposed Project . 5.2-12
Table 5.2-5 Wetlands: Comparison of Sensitive Wetland Regions that would be Crossed by the 2011 Steele City Alternative and the Proposed Project 5.2-12
Table 5.2-6 Vegetation: Summary of Estimated Impacts on Vegetation Communities Crossed (Acres) 2011 Steele City Alternative and Proposed Project 5.2-16
Table 5.2-7 Vegetation: Comparison of Estimated Impacts on Vegetation Communities of Conservation Concern 2011Steele City Alternative and Proposed Project 5.2-16
Table 5.2-8 Wildlife: Comparison of Types of Wildlife Impacts for Steele City Alternative and Proposed Project 5.2-19
Table 5.2-9 Wildlife: Comparison of Important Wildlife Habitats that would be Crossed by the 2011 Steele City Segment Alternative Route and the Proposed Project Route 5.2-20
Table 5.2-10 Fisheries: Comparison of the 2011 Steele City Alternative and Proposed Project 5.2-21

Table 5.2-11 American Burying Beetle: Fair/Good and Prime Habitat along the Nebraska 2011 Steele City Alternative Route and Proposed Project Route... 5.2-26
Table 5.2-12 Land Use: Land Ownership Comparison of the 2011 Steele City Alternative and Proposed Project by ROW Length ... 5.2-26
Table 5.2-13 Land Use: Comparison of the 2011 Steele City Alternative and Proposed Project by ROW Length ... 5.2-27
Table 5.2-14 Land Use: Land Ownership Comparison of the 2011 Steele City Alternative and Proposed Project by ROW Area ... 5.2-28
Table 5.2-15 Land Use: Comparison of the 2011 Steele City Alternative and Proposed Project by ROW Area ... 5.2-28
Table 5.2-16 Socioeconomics: Comparison of Selected Characteristics of Areas that would be affected by the 2011 Steele City Alternative and Proposed Project ... 5.2-29
Table 5.2-17 Socioeconomics: Comparison of Selected Impacts of the 2011 Steele City Alternative and Proposed Project ... 5.2-30
Table 5.2-18 Cultural Resources: Comparison of Resources near the 2011 Steele City Alignment and Proposed Project ... 5.2-33
Table 5.2-19 Geology: Comparison of the I-90 Corridor Alternative to the Proposed Project Alternative ... 5.2-36
Table 5.2-20 Soils: Comparison of the I-90 Corridor Alternative and Proposed Project ... 5.2-38
Table 5.2-21 Groundwater: Comparison of the I-90 Corridor Alternative and Proposed Pipeline ... 5.2-39
Table 5.2-22 Surface Water: Comparison Between Water Resources in the I-90 Corridor Alternative and Proposed Project ... 5.2-40
Table 5.2-23 Wetlands: Comparison of Estimated ROW Wetland Impacts within the Proposed I-90 Corridor Alternative and proposed Project by Phase (Operations and Construction) ... 5.2-42
Table 5.2-24 Wetlands: Comparison of Wetlands Regions Crossed ... 5.2-43
Table 5.2-25 Vegetation: Summary of Estimated Impacts on Vegetation Communities Crossed (Acres) ... 5.2-43
Table 5.2-26 Vegetation: Estimated Impacts on Vegetation Communities of Conservation Concern ... 5.2-44
Table 5.2-27 Wildlife: Comparison of the Impacts Associated with the I-90 Corridor Alternative to the Proposed Project. ... 5.2-47
Table 5.2-28 Comparison of Wildlife: Important Wildlife Habitats within or near the I-90 Corridor Alternative Area and the Proposed Project ... 5.2-48
Table 5.2-29 Fisheries: Comparison of the I-90 Corridor Alternative and Proposed Project.. 5.2-49
Table 5.2-30 Threatened and Endangered Species: Comparison of Potential Protected Species Habitat Crossed (Miles) Under the I-90 Corridor Alternative and the Proposed Project in South Dakota and Nebraska ... 5.2-51

Table 5.2-31 Land Use: Land Ownership Comparison of the I-90 Corridor Alternative and Proposed Project by ROW Length 5.2-52
Table 5.2-32 Land Use: Comparison of the I-90 Corridor Alternative and Proposed Project by ROW Length 5.2-52
Table 5.2-33 Land Use: Land Ownership Comparison of the I-90 Corridor Alternative and Proposed Project by ROW Area 5.2-53
Table 5.2-34 Land Use: Comparison of the I-90 Corridor Alternative and Proposed Project by ROW Area 5.2-54
Table 5.2-35 Socioeconomics: Comparison of States and Counties within the I-90 Corridor Alternative and the Project Area 5.2-55
Table 5.2-36 Socioeconomics: Comparison of Selected Socioeconomic Impacts of the I-90 Corridor Alternative and Proposed Project 5.2-56
Table 5.3-1 Impacts Associated with Proposed Project and Alternatives 5.3-1

LIST OF FIGURES

Figure 1.1-1 Project Overview 1.1-3
Figure 1.1-2 Comparison of Proposed Project and Previously Proposed Project in Montana, South Dakota, and Nebraska 1.1-5
Figure 1.2-1 Proposed Keystone XL Project and Associated Projects 1.2-3
Figure 1.2.2-1 Existing Keystone Pipeline and Proposed Keystone Expansions 1.2-5
Figure 1.4.2-1 Petroleum Administration for Defense Districts (PADDs) Locations 1.4-2
Figure 1.4.2-2 Relative Global and U.S. Coking Capacities 1.4-4
Figure 1.4.4-1 U.S. Product Demand—Total Liquids 1.4-8
Figure 1.4.4-2 U.S. Product Demand—Gasoline/E85 ..... 1.4-9
Figure 1.4.4-3 U.S. Product Demand—Jet/Distillate 1.4-10
Figure 1.4.4-4 Global Liquids Demand 1.4-11
Figure 1.4.4-5 AEO Crude Prices (2011 Dollars) 1.4-12
Figure 1.4.4-6 Domestic Refinery Throughput 1.4-13
Figure 1.4.4-7 U.S. Total Product Import and Export Trends, 2000-2012 YTD, mmbpd 1.4-15
Figure 1.4.4-8 Comparison of AEO Forecasts for Domestic Crude and Condensate Production 1.4-18
Figure 1.4.4-9 U.S. Net Crude Imports 1.4-21
Figure 1.4.4-10 Comparison of PADD 3 Crude Oil Imports and Sources 1.4-23
Figure 1.4.4-11 Comparison of Canadian Oil Sands Crude Oil Production Forecasts 1.4-25
Figure 1.4.4-12 Comparison of CAPP Forecasts and Actual Production, 2006 to 2012 ..... 1.4-25
Figure 1.4.6-1 Estimated Rail Export Volumes and Projected Rail System Capacity, North Dakota 1.4-35

Figure 1.4.6-2 Williston Basin Crude Oil Transportation, December 2012 ..... 1.4-36
Figure 1.4.6-3 Actual Canadian National and Canadian Pacific Petroleum Products Transported, Carloads per Month 1.4-39
Figure 1.4.6-4 Crude by Train Loading and Off-Loading Facilities in 2010, Estimated Capacities 1.4-40
Figure 1.4.6-5 Crude by Train Loading, Off-Loading, and Transloading Facilities by PADD, and Estimated Capacities 1.4-41
Figure 1.4.6-6 Changes in U.S. Railcar Loads by Commodity, 2011 to 2012 ..... 1.4-45
Figure 1.4.6-7 Annual Increases in Rail Transport to Accommodate WSCB Production Compared to Coal 1.4-46
Figure 1.4.6-8 Comparison of Crude Oil Prices (2011 dollars) To Oil Sands Breakeven Costs Including Cost of Rail Transport 1.4-53
Figure 1.4.6-9 Estimated Additional Production in Oil Sands Raw Bitumen (bpd by 2030) by Project Break-Even Cost 1.4-54
Figure 1.4.6-10 Crude Oil Price Differentials Compared to Brent 1.4-59
Figure 1.4.6-11 Western Canadian Select Spot and Mayan U.S. Gulf Coast Prices 1.4-60
Figure 1.4.7-1 Comparison of WEO 2012 Projection Scenarios 1.4-63
Figure 1.4.8-1 Average Crude Oil and Gasoline Price Spreads, $/bbl 1.4-66
Figure 2.0-1 Existing Keystone Cushing Extension 2-3
Figure 2.1.1-1 Clarks Route Modification 2.1-6
Figure 2.1.1-2 Western Route Modification 2.1-7
Figure 2.1.1-3 Proposed Project Overview—Montana 2.1-9
Figure 2.1.1-4 Proposed Project Overview—South Dakota 2.1-11
Figure 2.1.1-5 Proposed Project Overview—Nebraska 2.1-13
Figure 2.1.2-1 Construction ROW without Adjacent Pipeline 2.1-15
Figure 2.1.4-1 Pump Facility with Pigging 2.1-21
Figure 2.1.5-1 Proposed Temporary Construction Camp 2.1-29
Figure 2.1.7-1 Construction Spreads 2.1-41
Figure 2.1.7-2 Typical Pipeline Construction Sequence 2.1-43
Figure 2.1.8-1 Uncased Road—Railroad Crossing Bore Detail 2.1-52
Figure 2.1.9-1 Pump Facility without Pigging 2.1-63
Figure 2.1.12-1 Bakken-Marketlink, Baker, MT 2.1-76
Figure 2.1.12-2 Plot Plan for Bakken Marketlink, Baker, MT 2.1-77
Figure 2.1.12-3 Big Bend to Witten 230-kV Line 2.1-79
Figure 2.2.3-1 Estimated North Dakota Rail Export Volumes, December 2012 ..... 2.2-3
Figure 2.2.3-2 Actual CN and Canadian Pacific Petroleum Products Transported, Carloads per Month 2.2-4
Figure 2.2.3-3 Annual Increases in Rail Transport to Accommodate WSCB Production Compared to Coal 2.2-5
Figure 2.2.3-4 Rail Route Scenarios between Canada and the United States 2.2-11

Figure 2.2.3-5 Bakken to Cushing Route 2.2-13
Figure 2.2.3-6 Typical Rail Loading Facility in North Dakota 2.2-16
Figure 2.2.3-7 Rail Route from Lloydminster to Prince Rupert 2.2-21
Figure 2.2.3-8 Rail Route from Hardisty Region to Wood River, Illinois 2.2-29
Figure 2.2.4-1 Major Route Alternatives 2.2-43
Figure 2.2.4-2 Detailed Screening Alternatives 2.2-53
Figure 2.2.4-3 I-90 Corridor Alternative 2.2-57
Figure 3.1.2-1 Surface Geology of Proposed Project Route 3.1-3
Figure 3.1.2-2 Seismic Hazards 3.1-21
Figure 3.1.2-3 Landslide Hazard Areas 3.1-25
Figure 3.1.2-4 Flood Hazard Areas 3.1-27
Figure 3.2.2-1 Highly Wind Erodible Soils 3.2-5
Figure 3.3.2-1 Schematic Hydrogeologic Cross-Section along Proposed Pipeline Route 3.3-3
Figure 3.3.2-2 Montana Water Wells Within 1 Mile of Proposed Pipeline Route 3.3-13
Figure 3.3.2-3 South Dakota Water Wells Within 1 Mile of Proposed Pipeline Route 3.3-15
Figure 3.3.2-4 Nebraska Water Wells Within 1 Mile of Proposed Pipeline Route 3.3-17
Figure 3.4.2-1 Montana Wetland Crossings and USEPA Ecoregions 3.4-4
Figure 3.4.2-2 South Dakota Wetland Crossings and USEPA Ecoregions 3.4-5
Figure 3.4.2-3 Nebraska Wetland Crossings and USEPA Ecoregions 3.4-6
Figure 3.5.2-1 Montana USEPA Ecoregions 3.5-9
Figure 3.5.2-2 South Dakota USEPA Ecoregions 3.5-11
Figure 3.5.2-3 Nebraska USEPA Ecoregions 3.5-13
Figure 3.5.4-1 Montana Vegetation Communities of Conservation Concern 3.5-23
Figure 3.5.4-2 South Dakota Vegetation Communities of Conservation Concern 3.5-25
Figure 3.5.4-3 Nebraska Vegetation Communities of Conservation Concern 3.5-27
Figure 3.8.3-1 Central Flyway Whooping Crane Migration Corridor for the Aransas-Wood Buffalo Population 3.8-15
Figure 3.8.3-2 American Burying Beetle Range in Nebraska (USFWS 2008b) 3.8-18
Figure 3.10.2-1 Communities within 2 Miles of the Project Area 3.10-5
Figure 3.10.2-2 Minority and Low-Income Populations within the Socioeconomic Analysis Area 3.10-29
Figure 3.13.5-1 Identified Potential Spill Receptors 3.13-19
Figure 4.5.3-1 Montana Land Cover 4.5-5
Figure 4.5.3-2 South Dakota Land Cover 4.5-7
Figure 4.5.3-3 Nebraska Land Cover 4.5-9
Figure 4.10.3-1 Health Professional Shortage Areas and Medically Underserved Areas/Populations in the Socioeconomic Analysis Area 4.10-19
Figure 4.14.1-1 Emissions Scenarios 4.14-3
Figure 4.14.1-2 Climate Regions of the United States 4.14-4

Figure 4.15.2-1 Known Locations of Past, Present, and Reasonably Foreseeable Future Projects in Montana 4.15-23
Figure 4.15.2-2 Known Locations of Past, Present, and Reasonably Foreseeable Future Projects in South Dakota 4.15-27
Figure 4.15.2-3 Known Locations of Past, Present, and Reasonably Foreseeable Future Projects in Nebraska 4.15-29
Figure 4.15.3-1 Known Locations of Past, Present, and Reasonably Foreseeable Future Projects in South Dakota with American Burying Beetle Areas of Potential Occurrence and Central Flyway Whooping Crane Migration Corridor 4.15-57
Figure 4.15.3-2 Known Locations of Past, Present, and Reasonably Foreseeable Future Projects in Nebraska with American Burying Beetle Areas of Potential Occurrence and Central Flyway Whooping Crane Migration Corridor 4.15-59
Figure 4.15.3-3 Comparison of the Percent Differential for WTW GHGs from Gasoline Produced from Various WCSB Oil Sands Relative to Reference Crudes 4.15-83
Figure 4.15.3-4 Comparison of the Percent Differential for WTT GHGs from Gasoline Produced from Various WCSB Oil Sands Relative to Reference Crudes 4.15-84
Figure 4.15.3-5 Percent Change in Near-Term WTW Weighted-Average GHG Emissions from the Mix of WCSB Oil Sands Crudes that may be Transported in the Proposed Project Relative to Reference Crudes 4.15-97
Figure 5.1.3-1 Causes of Oil Tanker Spills Up to 700 Tons 5.1-53
Figure 5.1.3-2 Causes of Oil Tanker Spills Larger than 700 Tons 5.1-53
Figure 5.1.3-3 Relative Incident Rates of Oil Transportation Modes (1997-2001) 5.1-54
Figure 5.2.1-1 Proposed Project and Alternatives 5.2-3
Figure 5.2.1-2 Route Alternatives and Proposed Project Route, USEPA Ecoregions, and Wetland Distribution 5.2-13
Figure 5.2.1-3 2007 Estimated American Burying Beetle Distribution in Nebraska 5.2-23

ACRONYMS AND ABBREVIATIONS

°C	degrees Celsius
°F	degrees Fahrenheit
µg/m^3	micrograms per cubic meter
/m	per meter
AA	alluvial aquifer
AAQS	Ambient Air Quality Standards
AAR	American Association of Railroads
ABMI	Alberta Biodiversity Monitoring Institute
AC	alternating current
ACHP	Advisory Council on Historic Preservation
ACS	American Community Survey
ACVG	alternating current voltage gradient
AEO	Annual Energy Outlook
AEUB	Alberta Energy and Utilities Board
AG	agriculture
Al-Pac FMA	Alberta-Pacific Forest Industries Forest Management Area
amsl	above mean sea level
ANSI	American National Standards Institute
AOC	abnormal operating conditions
AOPL	Association of Oil Pipelines
APE	area of potential effects
API	American Petroleum Institute
APLIC	Avian Power Line Interaction Committee
AQCR	Air Quality Control Regions
AqL	aquatic life
ARM	Administrative Rules Montana
ARPA	Archeological Resources Protection Act
ASME	American Society of Mechanical Engineers
ATWS	additional temporary work space
AUB	Alberta Utilities Commission
AWBP	Aransas-Wood Buffalo National Park
BA	Biological Assessment
bbl	barrel
bcf	billion cubic feet
bcf/d	billion cubic feet/day
BEA	U.S. Bureau of Economic Analysis
BEPC	Basin Electric Power Cooperative
BG	block group
BGEPA	Bald and Golden Eagle Protection Act
bgs	below ground surface
BIA	Bureau of Indian Affairs
BLM	Bureau of Land Management
BMP	best management practice
BNSF	BNSF Railway Company
BOR	U.S. Bureau of Reclamation
bpd	barrels per day
BS&W	basic sediment and water
BTEX	benzene, toluene, ethylbenzene, and xylene
CAA	Clean Air Act
CAAA	Clean Air Act Amendments
CAFE	Corporate Average Fuel Economy
CAFO	concentrated animal feeding operation
CAPP	Canadian Association of Petroleum Producers
CCPS	Center for Chemical Process Safety
CCS	Carbon capture and storage
CE	carbon equivalents
CEA	cumulative effects analysis
CEAA	Canadian Environmental Assessment Act
CEC	Commission for Environmental Cooperation
CEQ	Council on Environmental Quality

CERCLA	Comprehensive Environmental Response, Compensation, and Liability Act
cfm	cubic feet per minute
CFR	Code of Federal Regulations
CH_4	methane
CHAAP	Cornhusker Army Ammunition Plant
CIS	close-interval survey
CL	centerline
CL ROW	centerline of the right-of-way
cm	centimeter
CMIP	Coupled Model Intercomparison Project
CMRP	Construction, Mitigation, and Reclamation Plan
CMZ	channel mitigation zone
CN	Canadian national
CNW	commercially navigable waterway
CO	carbon monoxide
CO_2	carbon dioxide
CO_2e	carbon dioxide equivalent
co-ops	cooperatives
cP	centipoises
CP	cathodic protection
CPRS	Canadian Pacific Railway System
CRM	Control Room Management Rule
CRP	Conservation Reserve Program
CSA	Canadian Standards Association
CSS	cyclic steam stimulation
CT	census tract
CVA	Central Valley Agriculture
CWA	Clean Water Act
CY	contractor yard
dBA	decibels on the A-weighted scale
DC	direct current
DCVG	direct current voltage gradient
Department	U.S. Department of State
dilbit	diluted bitumen
DME	Dakota, Minnesota, & Eastern Railroad
DNRC	Department of Natural Resources and Conservation
DO	dissolved oxygen
DOH	Department of Health
DPHHS	Department of Public Health and Human Services
Dth/day	decatherms per day
DW	drinking water
DWT	deadweight tonnage
e-GRID	Emissions & Generation Resource Integrated Database
EC	Economic Corridor
EES	electrical equipment shelter
EI	environmental inspector
EIA	Energy Information Administration
EIS	Environmental Impact Statement
EO	Executive Order
ERCB	Energy Resources Conservation Board
ERP	Emergency Response Plan
ESA	Endangered Species Act
ESR	Environmental Screening Report
ESRI	Environmental Systems Research Institute
EUB	Alberta Energy and Utilities Board
FBE	fusion-bonded epoxy
FEMA	Federal Emergency Management Agency
FERC	Federal Energy Regulatory Commission
Final EIS	Final Environmental Impact Statement
FIRM	*Flood insurance rate map*
FOIA	Freedom of Information Act
FPR	failure pressure ration
FR	Federal Register
FSA	Farm Service Agency
ft	feet
ft/d	feet per day
FWCA	Fish and Wildlife Coordination Act
FWP	Farmable Wetlands Program
g	gram

g/cm^3	grams per cubic centimeter
g/hp-hr	grams per horsepower-hour
g/m^2	grams per square meter
g/ml	grams per milliliter
GAP	National Gap Analysis Program
GDP	gross domestic product
GHG	greenhouse gas
GIS	Geographic Information System
GOR	Gas-oil ratio
GPA	Great Plains Aquifer
gpm	gallons per minute
GSP	gross state product
H_2S	hydrogen sulfide
HAP	hazardous air pollutant
HC	hydrocarbons
HCA	high consequence area
HDD	horizontal directional drill
HFC	hydrofluorocarbon
HFE	hydrofluorinated ether
HHV	high heating value
hp	horsepower
HPA	high population area
HPRCC	High Plains Regional Climate Center
HPSA	Health Professional Shortage Areas
hr	hour
hr/yr	hours per year
HRSA	Health Resource Services Administration
HSSM	Hydrocarbon Spill Screening Model
HVDC	high voltage direct current
IBA	important bird area
IC	Incident Commander
ICF	ICF International LLC
ICS	Incident Command System
IEA	International Energy Agency
IEO	International Energy Outlook
IHS CERA	IHS Cambridge Energy Research Associates, Inc.
IMLV	Intermediate mainline valve
in	inch
IPCC	Intergovernmental Panel on Climate Change
ISO	International Organization for Standardization
ITOPF	International Tanker Owners Pollution Federation Limited
KDWPT	Kansas Department of Wildlife, Parks, and Tourism
Keystone	TransCanada Keystone Pipeline, LP
kg	kilogram
kg/m^3	kilograms per cubic meter
km	kilometer
km^2	square kilometers
KMIGT	Kinder-Morgan Interstate Gas Transmission
kPa	kilopascal
KSDA	Kansas Department of Agriculture
kV	kilovolt
kW	kilowatt
LB	Legislative Bill
lb/MMBtu	pounds per million British Thermal Units
LCA	lifecycle analysis
LCFS	low carbon fuel standard
LCNHT	Lewis and Clark National Historic Trail
Ldn	day-night sound level
LDS	leak detection system
Leq	equivalent continuous sound level
Leq(24)	24-hour equivalent sound level
LHV	Lower heating value
LLC	limited liability company
LLS	Light Louisiana Sweet
LNAPL	light non-aqueous phase liquid
LOOP	Louisiana Offshore Oil Port
LSHR	landscape hazard ranking system
LVH	lower heating value
LW	local/county noxious week
m	meter
m/d	meter per day

m^3	cubic meter
MACT	Maximum Achievable Control Technology
MALAA	may affect, likely to adversely affect
MBCA	Migratory Bird Convention Act
MBCB	Montana Building Code Bureau
MBOGC	Montana Board of Oil and Gas Conservation
MBTA	Migratory Bird Treaty Act
MCA	Montana Code Annotated
MCL	maximum contaminant level
MCR	micro carbon residue
MDA	Montana Department of Agriculture
MDEQ	Montana Department of Environmental Quality
MDNRC	Montana Department of Natural Resources and Conservation
MDT	Montana Department of Transportation
MDU	Montana-Dakota Utilities
MFSA	Major Facilities Siting Act
MFWP	Montana Fish, Wildlife, and Parks
mg	milligrams
mg/L	milligrams per liter
mgKOH/g	milligrams potassium hydroxide per gram
MGWPCS	Montana Ground Water Pollution Control System
mi^2	square miles
MJ	megajoule
MLA	Mineral Leasing Act
MLV	mainline valve
mmbpd	million barrels per day
MMBtu	million British thermal units
MMcf/d	million cubic feet per day
MMDK	million decatherms
mmhos/cm	millimhos per centimeter
$MMTCO_2e$	million metric tons of CO_2 equivalent
MNHP	Montana Natural Heritage Program
MOP	maximum operating pressure
MP	milepost
MPDES	Montana Pollutant Discharge Elimination System
mpg	miles per gallon
MROW	Midwest Reliability Organization West
MSA	metropolitan statistical area
MSDS	Material Data Safety Sheets
MT	Montana
MUA/P	Medically Underserved Areas/Populations
MW	megawatt
MWh/yr	megawatt-hour per year
N_2O	nitrous oxide
NA	not applicable
na	not available
NAAQS	National Ambient Air Quality Standards
NAC	Nebraska Administrative Code
NACE	National Association of Corrosion Engineers
NAGPRA	Native America Graves Protection and Repatriation Act
NAIP	National Aerial Imagery Program
NAS	National Academy of Sciences
NCRC	Nebraska Central Railroad Company
ND	no data
NDA	Nebraska Department of Agriculture
NDE	nondestructive examination
NDEQ	Nebraska Department of Environmental Quality
NDGFD	North Dakota Game and Fish Department
NDHHS	Nebraska Department of Health and Human Services
NDOR	Nebraska Department of Roads
NDPA	North Dakota Pipeline Authority
NE SFM	Nebraska State Fire Marshal

NEAAQS	Nebraska Ambient Air Quality Standards
NEB	National Energy Board (Canada)
NEPA	National Environmental Policy Act
NESHAP	National Emissions Standards for Hazardous Air Pollutants
NETL	National Energy Technology Laboratory
NF_3	nitrogen trifluoride
NFO	Non-significant Fossil Occurrence
NGFC	Nebraska Game and Fish Commission
NGL	natural gas liquids
NGPAS	Northern Great Plains Aquifer System
NGPC	Nebraska Game and Parks Commission
NGPD	Nebraska Game and Parks Department
NHD	National Hydrography Dataset
NHP	Natural Heritage Program
NHPA	National Historic Preservation Act of 1986
NHPAQ	Northern High Plains Aquifer
NHTSA	National Highway Traffic Safety Administration
NID	National Interest Determination
NLAA	may affect, not likely to adversely affect
NLCD	National Land Cover Database
NMHC	non-methane hydrocarbon
NNLP	Nebraska Natural Legacy Project
NNRC	Nebraska Northeastern Railway Company
NO_2	nitrogen dioxide
NOA	Notice of Availability
NOAA	National Oceanic and Atmospheric Administration
NOI	Notice of Intent
NO_X	nitrogen oxide
NPDES	National Pollutant Discharge Elimination System
NPPD	Nebraska Public Power District
NPR	National Public Radio
NPS	National Park Service
NRC	National Response Center
NRCS	Natural Resources Conservation Service
NRD	Natural Resources District
NRDC	Natural Resources Defense Council
NRHP	National Register of Historic Places
NSA	noise sensitive areas
NSPS	New Source Performance Standards
NSR	New Source Review
NTSB	National Transportation Safety Board
NW	noxious weed
NWI	National Wetland Inventory
NWP	Nationwide Permit
O_2	oxygen gas
O_3	ozone
OCC	Operations Control Center
OGJ	Oil & Gas Journal
OGP	International Association of Oil and Gas Producers
OPA	other populated area
OPA 90	Oil Pollution Act of 1990
OPS	Office of Pipeline Safety
OW	open water
PA	Programmatic Agreement
PADD	Petroleum Administration for Defense District
PAH	polycyclic aromatic hydrocarbons
Pb	lead
PCIC	project cumulative impact corridor
PEM	palustrine emergent wetland
PFC	perfluorocarbon
PFO	palustrine forested wetland
PFYC	Potential Fossil Yield Classification
PHMSA	Pipeline Hazardous Material Safety Administration
PI	point of inflection (angle)

PM	particulate matter
PM_{10}	particulate matter with aerodynamic diameter of 10 microns and less
$PM_{2.5}$	particulate matter with aerodynamic diameter of 10 microns and less
PMMP	Paleontological Monitoring and Mitigation Plan
PMP	Pipeline Maintenance Program
POTW	publically owned treatment works
PPA	Protection Priority Areas
PPD	Public Power District
PPE	personal protective equipment
ppm	parts per million
ppmw	parts per million by weight
PPR	Prairie Pothole Region
Project	Keystone XL Project
PS	pump station
PSD	prevention of significant deterioration
psi	pounds per square inch
psig	pounds per square inch gauge
PSRP	Pipeline Spill Response Plan
PSS	palustrine scrub shrub wetland
ptb	pounds per thousand barrels
PWS	public water supply
py	pipeyard
QC	quality control
R	riverine wetlands
R-STRENG	remaining strength
RBOB	reformulated blendstock for oxygenate blending
Rec	recreation
Reclamation	Bureau of Reclamation
REX-W	Rockies Express-West
RFI	radio frequency interference
RFS2	USEPA Renewable Fuel Standard
riv-OW	riverine-open water
ROD	Record of Decision
ROS	rest of state
ROW	right-of-way
RP	Recommended Practice
RPMA	Recovery-Priority Management Area
RPS	Renewable Portfolio Standard
RUS	Rural Utilities Service
RV	recreational vehicle
SAGD	Steam-assisted gravity drainage
SARA	Species at Risk Act
SC	species of concern
SCADA	Supervisory Control and Data Acquisition
SCC	stress corrosion cracking
SCO	synthetic crude oil
SD	South Dakota
SD DOT	South Dakota Department of Transportation
SDA	South Dakota Department of Agriculture
SDCL	South Dakota Common Law
SDDENR	South Dakota Department of Environment and Natural Resources
SDGFP	South Dakota Game, Fish, and Parks
SDIWWG	South Dakota Interagency Wetlands Working Group
SDPUC	South Dakota Public Utilities Commission
SDSMT	South Dakota School of Mines and Technology
SDWA	Safe Drinking Water Act
SER	Supplemental Environmental Report
SF_6	sulfur hexafluoride
SFL	Significant Fossil Localities
SFM	Office of the State Fire Marshall
SHPO	State Historic Preservation Office(er)
SIP	State Implementation Plan
SMS	Scenery Management System
SO_2	sulfur dioxide
SOR	Steam-oil ratio

SPCC	Spill Prevention, Control, and Countermeasure
SPSO	Southwest Power Pool South
Supplemental EIS	Supplemental Environmental Impact Statement
SWPA	Source Water Protection Area
TAN	total acid number
TBD	to be determined
TCE	trichloroethylene
TCEQ	Texas Commission on Environmental Quality
TCP	traditional cultural properties
TDS	total dissolved solids
TEFC	The Ecological Framework of Canada
THPO	Tribal Historic Preservation Officer
TKN	total Kjehldahl nitrogen
TPG	The Perryman Group
tpy	tons per year
TSB	Transportation Safety Board
TTW	Tank-to-wheels
TWA	temporary workspace area
UP	Union Pacific Railroad Company
U.S.	United States
USACE	U.S. Army Corps of Engineers
USBR	U.S. Bureau of Reclamation
USC	United States Code
USDA	U.S. Department of Agriculture
USDOE	U.S. Department of Energy
USDOT	U.S. Department of Transportation
USEPA	U.S. Environmental Protection Agency
USFS	U.S. Forest Service
USFWS	U.S. Fish and Wildlife Service
USGCRP	United States Global Change Research Program
USGS	U.S. Geological Survey
USNABCI	U.S. North American Bird Conservation Initiative
UST	underground storage tank
VES	variable frequency drive equipment shelter
VOC	volatile organic compound
vol%	percent volume
VRM	visual resource management
WCD	worst-case discharge
WCI	Western Climate Initiative
WCSB	Western Canadian Sedimentary Basin
WEG	Wind Erodibility Group
Western	Western Area Power Administration
WHIP	Wildlife Habitat Incentive Program
WHPA	wellhead protection areas
WHSRN	Western Hemisphere Shorebird Reserve Network
Williston Basin	A large sedimentary basin in eastern Montana, western North and South Dakota, and southern Saskatchewan known for its rich deposits of crude oil
WIPA	Western Interior Plains Aquifer
WMA	wildlife management area
WMD	Wetland Management District
WRCC	Western Regional Climate Center
WRP	Wetland Reserve Program
wt%	weight percent
WTI	West Texas Intermediate
WTR	Well-to-refinery gate
WTT	well to tank
WTW	well to wheels
WW	warmwater
WYGF	Wyoming Game and Fish Department
yr	year

-Page Intentionally Left Blank-

APPENDIX A

Governor Approval of the Keystone XL Project in Nebraska

-This page intentionally left blank-

Dave Heineman
Governor

STATE OF NEBRASKA
OFFICE OF THE GOVERNOR
P.O. Box 94848 • Lincoln, Nebraska 68509-4848
Phone: (402) 471-2244 • dave.heineman@nebraska.gov

January 22, 2013

President Barack Obama
The White House
1600 Pennsylvania Avenue, NW
Washington, D.C. 20500

Secretary Hillary Rodham Clinton
U.S. Department of State
2201 C Street, NW
Washington, D.C. 20520

Dear President Obama and Secretary Clinton:

I am writing to you today to inform you that the State of Nebraska has completed its evaluation process of a proposed reroute of TransCanada's Keystone XL Pipeline project through the State of Nebraska. As you are aware, in 2011, I called the Nebraska Legislature into a special session to address the siting of a proposed pipeline. On November 22, 2011, I signed LB 1 and LB 4 into law. LB 1 adopted the Major Oil Pipeline Siting Act. LB 4 provided for state participation in a federal supplemental environmental impact statement review process for oil pipelines.

On January 18, 2012, TransCanada's Presidential Permit application was denied. The process established by LB 4 was on hold while we reviewed in detail what that meant for Nebraska. During the 2012 legislative session, the Legislature passed, and I signed into law, LB 1161, which allowed the Nebraska Department of Environmental Quality (NDEQ) to continue evaluating a proposed pipeline route. On April 18, 2012 TransCanada submitted proposed alternative routes to the NDEQ, and on May 24, 2012 the NDEQ entered into a Memorandum of Understanding with the U.S. Department of State to provide a framework for a timely collaborative environmental analysis of routes within Nebraska consistent with National Environmental Policy Act (NEPA), the National Historical Preservation Act, and all other relevant laws and regulations. On January 3, 2013, the NDEQ submitted the Final Evaluation Report on the proposed pipeline reroute to me for my review.

Pursuant to Neb. Rev. Stat. §57-1501, *et. seq.*, the NDEQ has evaluated a route for an oil pipeline within, through, or across the State of Nebraska submitted by a pipeline carrier for the stated purpose of being included in a federal agency's or agencies' NEPA review process; collaborated with a federal agency or agencies in a review under NEPA involving a supplemental environmental impact statement for oil pipeline projects within, through, or across the state;

An Equal Opportunity/Affirmative Action Employer
Printed with soy ink on recycled paper

contracted with HDR, inc. to assist in evaluating a proposed alternative route; solicited public comments over a seven month period, held five public information meetings, and one public hearing; and analyzed the environmental, economic, social, and other impacts associated with the proposed route and route alternatives in Nebraska.

The NDEQ's evaluation of the 194.5-mile-long proposed pipeline reroute has resulted in multiple findings. The following are major determinations from the Final Evaluation Report:

- The proposed Nebraska Reroute avoids the Sand Hills but would cross the High Plains Aquifer, including the Ogallala Group. Impacts on aquifers from a release should be localized and Keystone would be responsible for any cleanup.
- The proposed Nebraska Reroute avoids many areas of fragile soils in Northern Nebraska.
- The proposed Nebraska Reroute avoids a shallow groundwater area upgradient (west) of the boundary of the Clarks Wellhead Protection Area, where the aquifer is thin, wells are shallow, and bedrock is close to the surface.
- Affected agricultural operations could resume the season after the completion of construction.
- Construction of the pipeline would result in $418.1 million in economic benefits.
- The project would generate $16.5 million in use taxes from pipeline construction materials.
- Annual local property tax revenues, for the first full year of valuation, would be between $11 million and $13 million.
- Construction and operation of the proposed Keystone XL Pipeline, with the mitigation and commitments from Keystone would have minimal environmental impacts in Nebraska.
- Throughout NDEQ's evaluation process, the concerns of Nebraskans have had a major influence on the pipeline route, the mitigation commitments, and this evaluation.
- Keystone would be responsible for developing an Emergency Response Plan for a product release associated with the operation of the proposed Keystone XL Pipeline and ancillary facilities. In the event of a spill, appropriate authorities would have timely access to product characteristics.
- Keystone would have financial and regulatory responsibility for any spill associated with the proposed Keystone XL Pipeline.

As stated in the Final Evaluation Report, TransCanada has provided assurances to the State of Nebraska that the company would implement the following mitigation measures. These measures would include: developing an Emergency Response Plan for a crude oil release associated with the operation of the Keystone XL Pipeline and ancillary facilities; providing fast access to the product's Material Safety Data Sheet in the event of a release; providing, at landowner request, baseline water well testing prior to construction for domestic and livestock wells within 300 feet of the centerline of the route; providing for an independent public employee to act as a liaison

between Keystone and landowners, local communities, and residents to facilitate an open exchange of information; adhering to 57 special safety conditions, including more rigorous pipeline design, manufacturing, construction, records and reporting, testing, operational, and maintenance standards developed in coordination with the U.S. Department of Transportation, Pipeline and Hazardous Materials Safety Administration; and in the event of a release, Keystone would be responsible for all costs associated with state and federal cleanup requirements; and Keystone would provide evidence that it is carrying $200 million in third party liability insurance to cover cleanup costs for incidents in Nebraska.

I hereby, in accordance with Neb. Rev. Stat. §57-1503(4), approve the route reviewed in the Final Evaluation Report conducted pursuant to Neb. Rev. Stat. §57-1503(1). I request that Nebraska's evaluation be included in the Department of State's Supplemental Environmental Impact Statement. I appreciate your attention to this matter.

Sincerely,

Dave Heineman

Dave Heineman
Governor

Enclosure: Final Evaluation Report (disc)

-This page intentionally left blank-

APPENDIX B

PHMSA 57 Special Conditions for Keystone XL and Keystone Compared to 49 CFR 195

-This page intentionally left blank-

PHMSA 57 SPECIAL CONDITIONS FOR KEYSTONE XL COMPARED TO 49 CFR 195

Condition	Keystone XL	49 CFR Part 195	Benefits
1	**Steel Properties:** Skelp / plate must be micro-alloyed, fine grained, fully killed steel with calcium treatment and continuous casting.	Less prescriptive; references API 5L standard, which does not require latest steel making properties.	These properties ensure high quality carbon steel which reduces chance of a pipeline release as compared with Part 195 requirement, thus increasing public safety.
2	**Manufacturing Standards:** Pipe carbon equivalents must be at or below 0.23% based on the material chemistry parameter, carbon equivalent (CE) (Pcm) formula (Ito-Bessyo formula) or 0.40% based on the C-IIW formula (International Institute of Welding formula).	Less prescriptive; references API 5L standard.	Ensure the steel is weldable when the pipe joints are joined together in the field using manual and mechanized welding processes based on the various alloys used to make up the chemical nature of the high strength carbon steel.
3	**Fracture Control**: API 5L and other specifications and standards addressing the steel pipe toughness properties needed to resist crack initiation, crack propagation and to ensure crack arrest during a pipeline failure caused by a fracture must be followed. Keystone must prepare and implement a fracture control plan addressing the steel pipe properties necessary to resist crack initiation and crack propagation. The plan must include acceptable Charpy Impact and Drop Weight Tear Test values, which are measures of a steel pipeline's toughness and resistance to fracture.	Less prescriptive; references API 5L standard.	Provides the pipe is resistant to initiation of and propagation of a flaw and that, if a failure does occur, the steel has adequate properties so that the pipe will not have a running fracture over multiple joints of pipe.

Condition	Keystone XL	49 CFR Part 195	Benefits
4	**Steel – Plate, Coil or Skelp Quality Control and Assurance:** Keystone must prepare and implement an internal quality management program at mills involved in producing steel plate, coil, skelp, and pipe to be operated in the pipeline. These programs must be structured to detect and eliminate defects, inclusions, non-specification yield strength, and tensile strength properties, and chemistry as affecting pipe quality. a) A mill inspection program or internal quality management program must include the following: i. Non-destructive test of the ends and at least 35 percent of the surface of the plate, coil or pipe shall be performed to identify imperfections such as laminations, cracks, and inclusions that may impair serviceability. 100 percent of the pipe sections must be tested. ii. A macro etch test or other equivalent method to identify inclusions that may form centerline segregation during the continuous casting process shall be performed. iii. A quality assurance monitoring program implemented by the operator. iv. Pipe end tolerances must be applied so that there are no flat spots on the pipe that could affect welding quality. From each pipe mill, the end tolerances on pipe diameter must not exceed the range given in API 5L, Forty-Fourth (44th) Edition, Table 10, for any given pipe wall thickness. Keystone must demonstrate compliance with API 5L 44th Edition Table 10 by providing to the appropriate PHMSA Region Director(s), Central, Western, and Southwest Region, a histogram of end tolerance and wall thickness data representing physical evidence of compliance for a minimum of 10% of the pipe manufactured by each pipe mill facility. v. During construction, if pipe supplied from varying pipe mills cannot be preferentially strung, histograms and field weldability tests should be conducted to ensure that excessive high low is not in production/field welds.	General, less prescriptive in Code Section 195.112 and references API 5L.	These properties ensure high quality carbon steel.
5	**Pipe Seam Quality Control**: Keystone must prepare and implement a quality assurance program for pipe weld seams. The pipe weld seam tests must meet the minimum requirements for tensile strength in API 5L for the appropriate pipe grade properties.	General, less prescriptive in Code Section 195.112 and references API 5L.	These properties ensure welded seams (helical and straight) are equivalent strength to the pipe or stronger.

Condition	Keystone XL	49 CFR Part 195	Benefits
6	**Monitoring for Seam Fatigue from Transportation:** Keystone must inspect weld seams of the delivered pipe using properly calibrated manual or automatic ultrasonic testing techniques. The results must be appropriately documented. Each pipe section test record must be traceable to the pipe section tested.	General, less prescriptive in Code Sections 195.200 and 195.204.	This condition results from a NTSB failure analysis finding from a historical pipeline failure. This spot-check—post-rail transportation to site—is an added check that no damage is present on pipe after rail transport.
7	**Puncture Resistance:** Steel pipe must be puncture resistant to an excavator weighing up to 65 tons with a general purpose tooth size of 3.54 inches by 0.137 inches.	General, less prescriptive; no defined requirement.	Additional steel properties to resist external mechanical damage, which is the most common cause of pipeline failure.
8	**Mill Hydrostatic Test:** The pipe must be subjected to a mill hydrostatic test pressure of 95% specified minimum yield strength (SMYS) or greater for 10 seconds.	Sections 195.3 and 195.112.	Used to validate mainline pipe and seam integrity in the plant prior to final hydrotest in the field.
9	**Pipe Coating:** The application of a corrosion resistant coating to the steel pipe must be performed according to a coating application quality control program. The program must address pipe surface cleanliness standards, blast cleaning, application temperature control, adhesion, cathodic disbondment, moisture permeation, bending, minimum coating thickness, coating imperfections and coating repair.	Less prescriptive, Code Section 195.004 requires inspection.	Detailed application process requirements ensure quality control of coating process.
10	**Field Coating:** Keystone must implement field girth weld joint coating application specification and quality standards to ensure pipe surface cleanliness, application temperature control, adhesion quality, cathodic disbondment, moisture permeation, bending minimum coating thickness, holiday detection and repair quality. Field joint coatings must be non-shielding to cathodic protection (CP). Field coating applicators must use valid qualified coating procedures and be trained to use these procedures.	Less prescriptive; Code Section 195.204 requires inspection, does not require level of specificity.	Provides personnel are trained and are aware of the requirements when applying field joint corrosion protection.
11	**Coatings for Trenchless Installation:** Coatings used for directional bore, slick bore and other trenchless installation methods must be capable of resisting abrasion and other damage that may occur due to rocks and other obstructions encountered in this installation technique.	Less prescriptive, Code Section 195.202 and 195.246 require specification, does not require level of specificity.	Provides corrosion protection coating is not damaged during installation using trenchless methods.
12	**Bends Quality:** Keystone must obtain and retain certification records of factory induction bends and factory weld bends. Bends, flanges, and fittings must have carbon equivalents (CE) equal to or below 0.42 or a pre-heat procedure must be applied prior to welding for CE above 0.42 on the CE-II	Less prescriptive, Code Section 195.118 requires specifications, does not require	Provides pipeline materials are traceable for the life of the pipeline and weldable.

Condition	Keystone XL	49 CFR Part 195	Benefits
	W Formula (International Institute of Welding formula).	level of specificity.	
13	**Fittings:** Pressure rated fittings and components (including flanges, valves, gaskets, pressure vessels and pumps) must be rated for a pressure rating commensurate with the Maximum Operating Pressure (MOP) of the pipeline.	Less prescriptive, Code Section 195.118 requires specifications, does not require level of specificity.	Provides correct components are used that match the pipeline design pressure.
14	**Pipeline Design Factor – Pipelines:** Pipe installed must comply with the 0.72 design factor in 49 CFR § 195.106. a) At least six (6) months prior to beginning construction of the Keystone XL pipeline, Keystone must review with the appropriate PHMSA Regional Directors in Central, Western, and Southwest Regions how High Consequence Areas (HCA's) which could be affected, as defined in 49 CFR § 195.450, were determined (including commercial navigable waterways, high population areas, other populated areas, and unusually sensitive areas, including aquifers as defined in 49 CFR § 195.6) were determined, and the design of the pipeline associated with those segments. Keystone must identify piping and the design of piping located within pump stations, mainline valve assemblies, pigging facilities, measurement facilities, road crossings, railroad crossings, and segments operating immediately downstream and at lower elevations than a pump station. Keystone must also provide an overland spread analyses in accordance with § 195.452(f) to support could affect determinations for water bodies more than 100 feet wide from high-water mark to high-water mark. b) Post-construction, Keystone must conduct a yearly survey, not to exceed fifteen (15) months, to identify changes on the pipeline system that would impact its designation or design.	Less prescriptive, Code Section 195.106 requires 0.72 design factor.	Provides regulatory oversight of design compliance to federal codes and standards and that encroachments near the pipeline such as urban development or new wellhead protection areas (WHPA) are factored into integrity management plans.
15	**Temperature Control:** Normal pump discharge temperatures should remain at or below 120° Fahrenheit (°F). If the temperature exceeds 120°F, Keystone must prepare and implement a coating monitoring program in these areas, using ongoing Direct Current Voltage Gradient (DCVG) surveys or Alternating Current Voltage Gradient (ACVG) surveys, or other testing to demonstrate the integrity of the coating.	General, less prescriptive in Code Sections 195.400, 195.401, 195.402, 195.559, and 195.561.	Provides protective measures are in place for corrosion coating protection.

Condition	Keystone XL	49 CFR Part 195	Benefits
16	**Overpressure Protection Control:** Keystone must limit mainline pipeline overpressure protection to a maximum of 110% maximum operating pressure (MOP) during surge events consistent with 49 CFR § 195.406(b). Before commencing operation, Keystone must perform a surge analysis showing how the pipeline will be operated to be consistent with these overpressure protection conditions. Keystone shall equip the pipeline with field devices that will stop the transit (intentional or uncommanded) of the mainline valve should an overpressure condition occur or an impending overpressure condition is expected. Sufficient pressure sensors, on both the upstream and downside side of valves, must be installed to ensure that an overpressure situation does not occur. Sufficient pressure sensors shall be installed along the pipeline to conduct real time hydraulic modeling, and which can be used to conduct a surge analysis to determine whether pipeline segments have experienced an overpressure condition.	Required in Section 195.406(b), but less prescriptive on surge analysis.	Provides additional assurance that overpressure protection measures are in place.
17	**Construction Plans and Schedule:** At least ninety (90) days prior to the anticipated construction start date, Keystone must submit its construction plans and schedule to the appropriate PHMSA Directors.	Part 195 Code does not require operator to notify PHMSA of construction plans and schedule.	Provides that PHMSA is fully aware of construction plans prior to construction.
18	**Welding Procedures for New Pipeline Segments or Pipe Replacements:** For automatic or mechanized welding, Keystone shall use the 20th Edition of American Petroleum Institute 1104 (API 1104), "Welding of Pipelines and Related Facilities" for welding procedure qualification, welder qualification, and weld acceptance criteria. Keystone shall use the 20th Edition of API 1104 for other welding processes. Keystone shall nondestructively test girth welds in accordance with 49 CFR §§ 195.228, 195.230 and 195.234.	Nondestructive tests required in Code Sections 195.228, 195.230, and 195.234 but not same detail–general, less prescriptive. Only requires 10% of each welder's girth welds made each day to be nondestructively tested.	This condition, and Keystone's normal practices, ensures that every weld is inspected.
19	**Depth of Cover:** Keystone shall construct the pipeline with soil cover at a minimum depth of forty-eight (48) inches in areas, except in consolidated rock. The minimum depth in consolidated rock areas is thirty-six (36) inches. Keystone shall maintain a depth of cover of 48 inches in cultivated areas and a depth of 42 inches in other areas. In cultivated areas where conditions prevent the maintenance of forty-eight (48) inches of cover, Keystone must employ additional protective measures to alert the public and excavators to the presence of the pipeline. The additional measures shall include: a) Placing warning tape and additional line-of-sight pipeline markers along the affected pipeline segment,	Code Section 195.248 requires 36 inches of cover and 30 inches of cover in rock. Code does not require future cover maintenance as required in XL Condition 19 a and b.	Reduces the probability of mechanical damage through deeper pipeline burial. Requires depth of cover to be maintained at prescribed levels for life of pipeline.

Condition	Keystone XL	49 CFR Part 195	Benefits
	b) In areas where threats from chisel plowing or other activities are threats to the pipeline, the top of the pipeline must be installed and maintained at least one foot below the deepest penetration above the pipeline, not to be less than 42-inches of cover. If a routine patrol (ground and/or aerial) or other observed conditions during maintenance, where farming, excavation, or construction activities are ongoing, or after weather events occur, indicate the possible loss of cover over the pipeline, Keystone must perform a depth of cover study and replace cover as soon as practicable, not to exceed six (6) months, to meet the minimum depth of cover requirements specified herein. In addition to any depth of cover maintenance activities that may take place as a result of routine patrols, Keystone must perform a detailed depth of cover survey along the entire Keystone XL pipeline as frequently as practicable, not to exceed once every ten (10) years, and replace cover as soon as practicable, not to exceed six (6) months, to meet the minimum depth of cover requirements specified herein.		
20	**Construction Tasks:** Keystone must prepare and follow an Operator Qualification (OQ) Program for construction tasks that can affect pipeline integrity. The Construction OQ program must comply with 49 CFR § 195.501 and must be followed throughout the construction process for the qualification of individuals performing tasks on the pipeline. Girth welds must be inspected, repaired and non-destructively examined in accordance with 49 CFR §§ 195.228, 195.230, and 195.234. The NDE examiner must have required and current certifications.	General, less prescriptive. Construction personnel training, such as reading project specifications.	Provides that integrity of girth welds is examined by qualified individuals.
22	**Pressure Test Levels:** The pre-in service hydrostatic test must be to a pressure producing a hoop stress of a minimum 100% SMYS for mainline pipe and 1.39 times MOP for pump stations for eight (8) continuous hours. They hydrostatic test results from each test must be submitted in electronic format to the applicable PHMSA Director(s) in PHMSA Central, Western and Southwest Regions after completion of each pipeline.	Less prescriptive. Code Section 195.304 requires pressure test 1.25 times MOP for 4 hours and 1.1 times MOP for 4 hours.	Provides final proof test of the pipeline including testing at greater pressure than required by Code at pump stations prior to placing in-service.
23	**Assessment of Test Failures:** Pipe failure occurring during the pre-in service hydrostatic test must undergo a root cause failure analysis to include a metallurgical examination of the failed pipe. The results of this examination must preclude a systemic pipeline material issue and the results must be reported to PHMSA headquarters and the applicable PHMSA Director(s) in Central, Western, and Southwest Regions within 60 days of the failure.	Part 195 Code does not require operator to conduct assessment of test failures of hydrotest failures prior to placing in-service.	Provides no systemic issues are present should a pre-in-service hydrotest failure be experienced.

Condition	Keystone XL	49 CFR Part 195	Benefits
24	**Supervisory Control and Data Acquisition (SCADA) System:** Keystone must develop and install a SCADA system to provide remote monitoring and control of the entire pipeline system.	General, less prescriptive. Code Section 195.134 states that a leak detection system must comply, but does not directly state a SCADA system is required.	Provides state-of-the-art monitoring and control of the pipeline.
25	**SCADA System – General**: a) Scan rate shall be fast enough to minimize overpressure conditions (overpressure control system), provide very responsive abnormal operation indications to controllers and detect small leaks within technology limitations. b) Must meet the requirements of regulations developed as a result of the findings of the National Transportation Safety Board (NTSB), Supervisory Control and Data Acquisition (SCADA) in Liquid Pipelines, Safety Study, NTSB/SS-05/02. c) Develop and implement shift change procedures for a controller that are scientifically based, sets appropriate work and rest schedules, and consider circadian rhythms and human sleep and rest requirements in-line with guidance provided by NTSB recommendation P-99-12 issued June 1, 1999. d) Verify point-to-point display and SCADA system inputs before placing the line in service. This shall be implemented and performed at locations on the Keystone XL system where a SCADA system is used and where an individual(s) is assigned the responsibility to monitor and respond to alarm information (tanks terminal or facilities also). e) Implement individual controller log-in provisions. f) Establish and maintain a secure operating control room environment. g) Establish and maintain the ability to make modifications and test these modifications in an off-line mode. The pipeline must have controls in-place and be functionally tested in an off-line mode prior to changes being implemented after the line is in service and prior to beginning the line fill stage. h) Provide SCADA computer process load information tracking.	General, less prescriptive until late 2011 to 2013, when Control Room Management Rule (CRM), Code Section 195.446, is implemented. Most of these items are explicit in CRM or inferred in CRM.	Provides NTSB findings are included from previous pipeline failure investigations.
26	**SCADA – Alarm Management:** Alarm Management Policy and Procedures shall address: a) Alarm priorities determination. b) Controllers' authority and responsibility.	General, less prescriptive until late 2011 to 2013, when Control Room Management Rule (CRM), Code Section	Provides state of the art monitoring and control of the pipeline.

Condition	Keystone XL	49 CFR Part 195	Benefits
	c) Clear alarm and event descriptors that are understood by controllers. d) Number of alarms. e) Potential systemic system issues. f) Unnecessary alarms. g) Controller's performance regarding alarm or event response. h) Alarm indication of abnormal operating conditions (AOCs). i) Combination AOCs or sequential alarms and events. j) Workload concerns. i. This alarm management policy and procedure review shall be implemented and performed at locations on the Keystone XL system where a SCADA system is used and where an individual(s) is assigned the responsibility to monitor and respond to alarm information (such as for tanks, terminals, or other associated facilities).	195.446, is implemented. Most of these items are explicit in CRM.	
27	**SCADA – Leak Detection System (LDS):** The LDS Plan shall include provisions for: a) Implementing applicable provisions in American Petroleum Institute Recommended Practice 1130, Computational Pipeline Monitoring for Liquid Pipelines, (API RP 1130, Computational Pipeline Monitoring for Liquid Pipelines, API RP 1130, 1st Edition 2007). b) Addressing the following leak detection system testing and validation issues: i. Developing data validation plan (ensure input data to SCADA is valid) c) Defining lead detection criteria in the following areas: **i.** Providing redundancy plans for hardware and software and a periodic test requirement for equipment to be used live (also applies to SCADA equipment).	General, less prescriptive Code Section 195.134 and 195.444, not as detailed.	Provides state-of-the-art monitoring and control of the pipeline.
28	**SCADA – Pipeline Model and Simulator:** The Thermal-Hydraulic Pipeline Model / Simulator including pressure control system shall include a Model Validation / Verification Plan.	General, less prescriptive until late 2011 to 2013, when Control Room Management Rule (CRM) is implemented.	Provides state-of-the-art monitoring and control of the pipeline.
29	**SCADA – Training:** The training and qualification plan (including simulator training) for controllers shall: a) Emphasize procedures for detecting and mitigating leaks. b) Include a fatigue management plan and implementation of a shift	General, less prescriptive until late 2011 to 2013, when Control Room Management Rule (CRM) is implemented.	Provides state-of-the-art monitoring and control of the pipeline.

Condition	Keystone XL	49 CFR Part 195	Benefits
	rotation schedule that minimizes possible fatigue concerns and is scientifically based, sets appropriate work and rest schedules, and consider circadian rhythms and human sleep and rest requirements in-line with NTSB recommendation P-99-12 issued June 1, 1999. c) Define controller maximum hours of service limitations. d) Meet the requirements of regulations developed as a result of the guidance provided in the American Society of Mechanical Engineers Standard B31Q, Pipeline Personnel Qualification Standard (ASME B31Q), September 2006, for developing qualification program plans. e) Include and implement a full training simulator capable of replaying for training purposes near miss or lesson learned scenarios. f) Implement tabletop and field exercises no less than five (5) times per year that allow controllers to provide feedback to the exercises, participate in exercise scenario development and be active participants in the exercise.		
30	**SCADA – Calibration and Maintenance:** The calibration and maintenance plan for the instrumentation and SCADA system shall be developed using guidance provided in American Petroleum Institute Recommended Practice 1130, Computational Pipeline Monitoring for Liquid Pipelines, (API RP 1130 1st Edition 2007). Instrumentation repairs shall be tracked and documentation provided regarding prioritization of these repairs. Controller log notes shall be periodically be reviewed for concerns regarding mechanical problems. This information shall be tracked and prioritized.	General, less prescriptive until late 2011 to 2013, when Control Room Management Rule (CRM) is implemented. Code Section 195.446(c) (2) will require conducting a point-to-point verification between SCADA displays and related field equipment when added or removed.	Provides state-of-the-art monitoring and control of the pipeline through fully functional SCADA system.
31	**SCADA – Leak Detection Manual:** The Leak Detection Manual shall be prepared using guidance provided in Canadian Standards Association (CSA), Oil and Gas Pipeline Systems, CSA Z662-03, Annex E, Section E.5.2, Leak Detection Manual.	General, less prescriptive Code Sections 195.134 and 195.444 for leak detection which does reference API 1130.	Provides state-of-the-art monitoring and control of the pipeline reflecting exacting standards.
32	**Mainline and Check Valve Control:** Keystone must design and install mainline block valves and check valves on the Keystone XL system based on the worst case discharge as calculated by 49 CFR § 194.105. Keystone shall locate valves in accordance with 49 CFR § 195.260 and by taking into consideration elevation, population, and environmentally sensitive locations, to minimize the consequences of a release from the pipeline. Mainline valves must be placed based on the analysis above or no more than twenty (20) miles apart, whichever is smaller. Mainline valves must	General Valve Requirements in Code Section 195.260.	Provides increased instrumentation feeding back data to reduce leak detection times, reduces potential spill volumes though prescriptive valve spacing, and ensures valves can close when loss of primary power is experienced.

Condition	Keystone XL	49 CFR Part 195	Benefits
	contain transit inhibit switches that prevent the valves from shutting at a rate (and in conjunction with pumps being shutdown) so that no pressure surges can occur, or other damage caused by unintended valve closures or too fast of a closure. Valves must be remotely controlled and actuated, and the SCADA system must be capable of closing the valve and monitoring the valve position, upstream pressure and downstream pressure so as to minimize the response time in the case of a failure. Remote power backup is required to ensure communications are maintained during inclement weather. Mainline valves must be capable of closure at all times. If it is impracticable to install a remote controlled valve, Keystone must submit a valve design and installation plan to the appropriate PHMSA Region Director(s), Central, Western, and Southwest Region to confirm the alternative approach provides an equivalent level of safety. For valves that cannot be remotely actuated, Keystone must document on a yearly basis not to exceed fifteen (15) months that personnel response time to these valves will not take over an hour.		Also ensures prompt response time to non-automated valve locations.
33	**Pipeline Inspection:** The entire Keystone Xl pipeline (not including pump stations and tank farms) must be capable of passing in-line inspection (ILI) tools. [Keystone shall prepare and implement a corrosion mitigation and integrity management plan for segments that do not allow the passage of an ILI device.]	ILI required in Code Section 195.120, but no requirements for station piping inspection.	Provides pipeline can be internally inspected and requires direct assessment plan for pump stations and other facilities.

Condition	Keystone XL	49 CFR Part 195	Benefits
34	**Internal Corrosion:** Keystone shall limit basic sediment and water (BS&W) to 0.5% by volume and report BS&W testing results to PHMSA in the annual report. Keystone shall also report upset conditions causing BS&W level excursions above the limit. a) Keystone must run cleaning pigs twice in the first year and as necessary in succeeding years based on the analysis of oil constituents, liquid test results, weight loss coupons location in areas with the greatest internal corrosion threat and other internal corrosion threats. At a minimum in the succeeding years following the first year Keystone must run cleaning pigs once a year, with intervals not to exceed 15 months. b) Liquids collected during the cleaning pig runs, such as BS&W, must be sampled, analyzed and internal corrosion mitigation plans developed based upon the lab test results. **c)** Keystone shall review the program at least quarterly based upon the crude oil quality and implement adjustments to monitor for, and mitigate the presence of, deleterious crude oil stream constituents.	General, less prescriptive in Code Section 195.579, which requires mitigation of internal corrosion.	Provides management of internal corrosion threat during operations.
35	**Cathodic Protection:** The initial CP system must be operational within six (6) months of placing a pipeline segment in service.	Required in Code Sections 195.563–within one year.	Provides early management of external corrosion threat during operations.
36	**Interference Current Surveys:** Keystone must perform interference surveys over the entire Keystone XL pipeline within six months of placing the pipeline in service to ensure compliance with applicable NACE International Recommended Practices 0169 (2002 or the latest version incorporated by reference in §195.3) and 0177 (2007 or the latest version referenced thorough the appropriate NACE standard incorporated by reference in 49 CFR § 195.3) (NACE RP 0169 and NACE RP 0177) for interference current levels. If interference currents are found, Keystone shall determine if there have been adverse effects on the pipeline and mitigate such efforts as necessary.	Required in Code Sections 195.575 and 195.577–no timing guidelines.	Provides early management of external corrosion threat during operations.
37	**Corrosion Surveys:** Keystone must complete corrosion surveys within six (6) months of placing the respective CP system(s) in operation to ensure adequate external corrosion protection per NACE RP 0169. The survey shall also address the proper number and location of CP test stations as well as alternating current (AC) interference mitigation and AC grounding programs per NACE RP 0177. At least one (1) CP test station must be located within each HCA with a maximum spacing between test stations of	Required in Code Sections 195.571 and 195.573–timing of 2 years.	Provides early management of external corrosion threat during operations.

Condition	Keystone XL	49 CFR Part 195	Benefits
	one-half mile.		
38	**Initial Close Interval Survey (CIS):** A CIS must be performed on the pipeline within one year of the pipeline in-service date. The CIS results must be integrated with the baseline ILI to determine whether further action is needed. Keystone must remediate anomalies indicated by the CIS data including improvements to CP systems and coating remediation within six (6) months of completing the CIS surveys. CIS along the pipeline must be conducted with current interrupted to confirm voltage drops in association with periodic ILI assessments under 49 CFR § 195.452 (j)(3).	Part 195 Code does not require operator to conduct ICS to confirm cathodic protection systems are performing to protect the pipeline from corrosion.	Provides management of external corrosion threat during operations.
39	**Coating Condition Survey:** Keystone must perform a Direct Current Voltage Gradient (DCVG) survey or an Alternating Current Voltage Gradient (ACVG) survey within six (6) months after operation to verify the pipeline coating conditions and to remediate integrity issues. Keystone must remediate damaged coating indications found during these assessments.	Part 195 Code does not require operator to conduct coating surveys after the pipe has been backfilled and graded.	Provides early management of external corrosion threat during operations.
40	**Pipeline Markers:** Keystone must install and maintain line-of-sight markings on the pipeline except in agricultural areas or large water crossings such as lakes where line of sight signage is not practical. The marking of pipelines may also be subject to environmental permits and local restrictions. Additional markers must be placed along the pipeline in areas where the pipeline is buried less than forty-eight (48) inches. Keystone must replace removed or damaged line-of-sight markers, during pipeline patrols and maintenance on the right-of-way.	Required in Code Section 195.410, but does not require same level of markers or marker replacement program.	Reduces probability of mechanical damage threat and public awareness of high pressure utility.
41	**Pipeline Patrolling:** Patrol the right-of-way at intervals not exceeding three (3) weeks, but at least twenty-six (26) times each calendar year, to inspect for excavation activities, ground movement, unstable soil, wash outs, leakage, or other activities or conditions affecting the safety operation of the pipeline.	Required in Code Section 195.412, ROW patrols every 3 weeks and 26 times per year, but is less prescriptive on items to look for during surveys.	Reduces probability of mechanical damage threat, erosion control, and other threats.
42	**Initial ILI:** Within three (3) years of pipeline segment in service, Keystone must perform a baseline ILI using a high-resolution magnetic flux leakage tool. Keystone must perform a baseline geometry tool run after completion of the hydrostatic strength test and backfill of the pipeline but no later than six (6) months after placing the pipeline in service.	Required in Code Section 195.452 within 5 years of placing in-service.	Provides early management of external and internal corrosion threat during operations.

Condition	Keystone XL	49 CFR Part 195	Benefits
43	**Deformation Tool:** Keystone must run a deformation tool through mainline piping prior to putting the product in the pipeline and remediate expanded pipe in accordance with PHMSA's "Interim Guidelines for Confirming Pipe Strength in Pipe Susceptible to Low Yield Strength for Liquid Pipeline" dated October 6, 2009 or subsequent PHMSA update to this guideline.	Not required in Part 195 Code, but PHMSA has issued advisory bulletin on low strength pipe.	Provides identification of construction damage and manufacturing defects.
44	**Future ILI:** Future ILI inspection must be performed on the entire pipeline on a frequency consistent with 49 CFR § 195.452 (j) (3) assessment intervals or on a frequency determined by fatigue studies of actual operating conditions. a) Conduct periodic close interval surveys (CIS) along the entire pipeline with current interrupted to confirm voltage drops in association with periodic ILI assessments under §195.452(j) (3). b) CIS must be conducted within three (3) months of running ILI surveys when using a five (5) year ILI frequency, not to exceed sixty-eight (68) months, in accordance with 49 CFR § 195.452 (j) (3) assessment intervals. c) CIS findings must be integrated into ILI Tool Findings.	Required in Code Section 195.452(j)(3), but does not require a, b, and c.	Provides enhanced management of external and internal corrosion threat during operations while overlapping data sets to cross check for issues.
45	**Verification of Reassessment Interval:** Keystone must submit a new fatigue analysis to validate the pipeline reassessment interval annually for the first five (5) years after placing the pipeline into service. The analysis must be performed on the segment experiencing the most severe historical pressure cycling conditions using actual pipeline pressure data. The fatigue analysis must be submitted to the appropriate PHMSA Director(s) in Central, Western, and Southwest Regions.	General, less prescriptive in Code Section 195.452, which requires reassessment intervals to be considered in high consequence areas.	Provides enhanced management of fatigue threat during operations and review by PHMSA.
46	**Flaw Growth Assessment:** Two (2) years after the pipeline in-service date, Keystone shall use data gathered on pipeline section experiencing the most severe historical pressure cycling conditions to determine effect on flaw growth that passed manufacturing standards and installation specifications. This study shall be performed by an independent party agreed upon by Keystone and PHMSA.	General, less prescriptive in Code Section 195.452, which requires reassessment intervals to be considered in high consequence areas.	Provides enhanced management of fatigue threat during operations.
47	**Direct Assessment Plan:** Headers, mainline valve bypasses and other sections that cannot accommodate ILI tools must be part of a Direct Assessment Plan or other acceptable integrity monitoring method using External and Internal Corrosion Direct Assessment criteria.	General, less prescriptive in Code Section 195.452, but not as detailed.	Provides enhanced management of corrosion threat during operation for non-piggable sections of piping inside facilities.

Condition	Keystone XL	49 CFR Part 195	Benefits
48	**Damage Prevention Program:** Keystone must incorporate the Common Ground Alliance's damage prevention best practices applicable to pipelines into its damage prevention program.	General, less prescriptive in Code Section 195.442, operator is not required to meet Common Ground Alliance's damage prevention best practices.	Provides enhanced public awareness as part of damage control programs.
49	**Anomaly Evaluation and Repair:** Anomaly evaluations and repairs must be performed based upon the following: a) Immediate Repair Conditions: Follow 49 CFR §195.452(h)(4)(i) except designate the calculated remaining strength failure pressure ratio (FPR) ≤ 1.16 for anomaly repairs; b) 60-Day Conditions: Follow 49 CFR § 195.452 (h)(4)(ii) except designate a FPR ≤ 1.25 for anomaly repairs; c) 180-Day Conditions: Follow 49 CFR § 195.452 (h)(4)(iii) with exceptions for the following conditions which must be scheduled for repair within 180 days: i. Calculated FPR = < 1.39; ii. Areas of corrosion with predicted metal loss greater than 40%; d) Predicted metal loss is greater than 40% of nominal wall that is located at crossing of another pipeline and; i. Gouge or groove greater than 8% of nominal wall. e) Each anomaly not repaired under the immediate repair requirements must have a corrosion growth rate and ILI tool tolerance assigned per the Integrity Management Program (IMP) to determine the maximum re-inspection interval. f) Anomaly Assessment Methods: Keystone must confirm the remaining strength (R-STRENG) effective area method, R-STRENG-085dL, and ASME B31G assessment methods are valid for the pipe diameter, wall thickness, grade, operating pressure, operating stress level and operating temperature. Keystone must also use the most conservative method until confirmation of the proper method is made to PHMSA headquarters. g) Flow Stress: Remaining strength calculations for X-80 pipe must use a flow stress equal to the average of the ultimate (tensile) strength and SMYS.	General, less prescriptive. Required in Code Section 195.452, except Code does not require immediate repair when Failure Pressure Ratio is less than 1.16 (Code requires less than 1.0, which is less than Maximum Operating Pressure with no safety factor) and does not require 180-day repair if wall loss is less than 50%.	Provides timely investigation and prompt repair of anomalies in the pipeline reported via in-line inspection.

Condition	Keystone XL	49 CFR Part 195	Benefits
	h) Dents: For initial construction and the initial geometry tool run, Keystone must remove dents with a depth greater than two percent (2%) of the nominal pipe diameter unless the dent is repaired by a method that reliable engineering tests and analyses show can permanently restore the serviceability of the pipe. For the purposes of this condition, a "dent" is a depression that produces a gross disturbance in the curvature of the pipe wall without reducing the pipe wall thickness. The depth of the dent is measured as the gap between the lowest point of the dent and the prolongation of the original contour of the pipe.		
50	**Reporting – Immediate:** Keystone must provide immediate notification of reportable incidents in accordance with 49 CFR Part 195, and shall notify the appropriate PHMSA regional office within twenty-four (24) hours of non-reportable leaks occurring on the pipeline.	General, less prescriptive. Required in Code Sections 195.50, 195.52, 159.54, 195.55, and 195.56, except nonreportable leaks do not require reporting.	Provides enhanced transparency to PHMSA.
51	**Reporting – 180 day:** Within 180 days of the pipeline in-service date, Keystone shall report on its compliance with these conditions to the PHMSA Associate Administrator and the appropriate PHMSA Directors in Central, Western, and Southwest Region.	Part 195 Code does not require operator to give PHMSA a 180-day overview of operations on new pipelines.	Provides enhanced transparency to PHMSA.
52	**Annual Reporting:** Keystone must annually report by February 15th each year the following to the PHMSA Associate Administrator and the appropriate Directors, PHMSA Central, Western, and Southwest Regions: a) The results of an ILI run or direct assessment results performed on the pipeline during the previous year. b) The results of internal corrosion management programs. c) New integrity threats identified during the previous year; d) An encroachment in the right-of-way, including the number of new residences or public gathering areas; e) HCA changes during the previous year; f) Reportable incidents that occurred during the previous year; g) Leaks on the pipeline that occurred during previous year; h) A list of repairs on the pipeline made during the previous year; i) On-going damage prevention initiatives on the pipeline and an evaluation of their success or failure; j) Changes in procedures used to assess and monitor the pipeline; and	Part 195 Code does not require operator to give PHMSA an annual overview of operations on new pipelines.	Provides enhanced transparency to PHMSA.

Condition	Keystone XL	49 CFR Part 195	Benefits
	k) Company mergers, acquisitions, transfers of assets, or other events affecting the regulatory responsibility of the company operating the pipeline.		
53	**Threat Identification and Evaluation:** Keystone must develop a threat matrix consistent with 49 CFR §195.452 to accomplish the following: a) Identify and compare increased risks of operating the pipeline; and b) Describe and implement procedures used to mitigate the risk. c) Where geotechnical threats exist that may impact operational safety, Keystone must run a geospatial tool and assess procedures to implement for conducting mitigative measures along the affected pipeline.	Part 195 Code does not require operator to develop a threat matrix on locations outside high consequence areas.	Provides state-of-the-art integrity management practices are employed across entire pipeline system and risks are identified and plans developed.
54	**Right of Way Management Plan:** Keystone must develop and implement a right-of-way management plan to protect the Keystone pipeline from damage due to excavation, third party and other activities. In areas where increased activities or natural forces could lead to increased threats to the pipeline beyond the initial threat conditions, the management plan must include increased inspections. The management plan must also include right-of-way inspection activities to complement the following: a) Depth of Cover (Condition 19) b) Pipeline Markers (Condition 40) c) Pipeline Patrolling (Condition 41) d) Damage Prevention Program (Condition 48); and e) Threat Identification and Evaluation (Condition 53).	Part 195 Code does not require operator to develop a Right-of-Way Management Plan for threats along the pipeline. This requirement is similar to the natural gas pipeline, Part 192 – Alternative Maximum Allowable Operating Pressure (MAOP) Rule, 80% SMYS.	Provides increased ROW inspections and protects against external damage to pipeline.
55	**Records:** Keystone must maintain records demonstrating compliance with the conditions herein for the useful life of the pipeline.	Part 195 Code does not require operators to maintain compliance records for pipeline life.	Provides compliance records are maintained for the life of the pipeline.

Condition	Keystone XL	49 CFR Part 195	Benefits
56	**Certification:** A senior executive officer of Keystone must certify in writing the following: a) That Keystone has met the conditions described herein; b) That the written design, construction, and operating and maintenance (O&M) plans and procedures for the Keystone pipeline have been updated to include additional requirements herein; c) That Keystone has reviewed and modified its damage prevention program relative to the Keystone pipeline to include additional elements required herein. Keystone must send a copy of the certification with the required senior executive signature and date of signature to PHMSA Associate Administrator and the Directors, PHMSA Central, Western, and Southwest Regions at least 90 days prior to operating the Keystone Pipeline.	General less prescriptive, Part 195 Code does not require senior executive to certify compliance prior to operations at a certain pressure level.	Provides Senior Management accountability and visibility to aspects of the project's design, construction and operations.
57	Within one (1) year of the in-service date, Keystone shall provide a detailed technical briefing, in person, to the appropriate PHMSA Directors in Central, Western, and Southwest Regions. The briefing shall cover the implementation of the requirements of the conditions herein, including information required by Condition 52. On the basis of PHMSA's review of the Condition 52 Annual Report and additional information provided at the briefing, PHMSA may require additional information.	Part 195 Code does not require one-year technical briefing of pipeline operations by operator to PHMSA.	Provides yearly in person reporting to PHMSA, increasing visibility and transparency to pipeline safety regulator.

-This page intentionally left blank-

APPENDIX C

Market Analysis Supplemental Information

-This page intentionally left blank-

SUPPLEMENTAL INFORMATION TO MARKET ANALYSIS

TABLE OF CONTENTS

1.0 Introduction 1
2.0 Relationship of PADD Regions to U.S. Crude Oil Market 1
2.1 PADD Supply Characteristics 1
2.2 Refinery Crude Selection Process 2
2.3 Refinery Upgrading and Expansion Projects Status 4
2.3.1 Midwest 4
2.3.2 Gulf Coast 4
3.0 Comparison of Annual Energy Outlook 2013, 2010, and the EnSys Low-Demand Outlooks 5
4.0 Discounts on Price of Inland Crude Due to Logistical Constraints 6
5.0 Pipeline and Rail Cost Information 13
6.0 Comparison of U.S. Product Demand, Annual Energy Outlook 2010 and 2012 14
7.0 Crude by Rail Loading, Off-Loading, and Transloading Facilities 15
8.0 Estimated WCSB Crude Oil Transport Capacity 20
9.0 Transport Costs from the Gulf Coast Area to Asian Ports 24
10.0 References 24

ATTACHMENT

Department of State Memo: The North American Oil Market Outlook, January 4, 2013

INDEX OF TABLES

Table 1 U.S. Product Demand Outlook 5
Table 2 Global Liquids Demand Outlook 6
Table 3 Impact of Pipeline Commitment Period on Tariffs: Example 1 13
Table 4 Impact of Pipeline Commitment Period on Tariffs: Example 2 13
Table 5 Estimated Delivered Cost via Rail on Selected Movements of Crude[a] 14
Table 6 PADD 1 Crude by Rail Offloading 15
Table 7 PADD 2 Bakken Rail Loading 16
Table 8 PADD 2 Non-Bakken Loading 17

Table 9 PADD 2 Rail to Marine Transloading Facilities 17
Table 10 PADD 2 Stroud to Cushing Loading/Transloading/Offloading Facilities 17
Table 11 PADD 3 Rail Terminals 18
Table 12 PADD 4 Rail Loading 19
Table 13 PADD 5 Rail Offloading/Transloading 19
Table 14 Canadian Rail Loading Facilities 20
Table 15 Estimated Existing Western Canada Pipeline Capacity[a] 21
Table 16 Estimated Western Canadian Sedimentary Basin Crude Oil Transport Capacity 22
Table 17 U.S. Gulf Crude Oil Exports, 2015 Outlook, VLCC and Suezmax[a] 24

INDEX OF FIGURES

Figure 1 Annual Average Price Spreads, LLS minus WTI, dollars/barrel 7
Figure 2 Average Crude Oil and Gasoline Price Spreads, dollar/bbl spread 9
Figure 3 Refinery Margins: Group 3 and Gulf Coast Area 10
Figure 4 Refinery Margins: Chicago and Gulf Coast Area 11
Figure 5 Annual Average Price Spreads, LLS minus Brent, dollars/barrel 12
Figure 6 Comparison of AEO 2010 and 2012 U.S. Product Demand – Total Liquids 15

ACRONYMS AND ABBREVIATIONS

AB	Alberta
AEO	Annual energy outlook
AL	Alabama
bbl	barrel
BNSF	Burlington Northern-San Francisco Railway
BP	British Petroleum
bpd	barrels per day
CA	California
CAPP	Canadian Association of Petroleum Producers
CN	Canadian National
CO	Colorado
CP	Canadian Pacific Railway
CPRS	Canadian Pacific Railway System
CSXT	CSX Transportation
DE	Delaware
dilbit	diluted bitumen
EIA	U.S. Energy Information Administration
EIS	Environmental Impact Statement
EOG	EOG Resources, Inc.
EOLA	Eola Yard, a BNSF Railway yard
FL	Florida
GT	GT Logistics LLC
IL	Illinois
KCS	Kansas City Southern Railway Company
KMEP	Kinder Morgan Energy Partners LP
L.P.	Limited Partnership
LA	Louisiana
LLS	Light Louisiana Sweet crude
LOOP	Louisiana Offshore Oil Port
LP	Limited Partnership
LPG	liquefied petroleum gases
MB	Manitoba
MMA	Montreal, Maine & Atlantic Railway, Ltd.
MO	Missouri
MS	Mississippi
MT	metric tons
MT	Montana
mmbpd	million barrels per day
NB	New Brunswick
ND	North Dakota
NJ	New Jersey
NM	New Mexico
NY	New York
NYMEX	New York Mercantile Exchange
OK	Oklahoma
OKDOT	Oklahoma Dept. of Transportation
OR	Oregon
PA	Pennsylvania
PADD	Petroleum Administration for Defense District
PQ	Province of Quebec, now abbreviated QC
SK	Saskatchewan
SLWC	Stillwater Central Railroad
TET	Texas Eastern Transmission Pipeline
TX	Texas
UP	Union Pacific Railroad Company
USGC	U.S. Gulf Coast
VA	Virginia
VLCC	very large crude carrier
WA	Washington
WCS	Western Canada Select crude
WCSB	Western Canadian Sedimentary Basin
WEO	World Energy Outlook
WI	Wisconsin
WRB	WRB Refining, LLC operates joint-venture WRB Refinery
WTI	West Texas Intermediate crude
WY	Wyoming

1.0 INTRODUCTION

This appendix supplements information related to the Market Analysis in the Supplemental Environmental Impact Statement (EIS) (Section 1.4, Market Analysis). The Supplemental EIS refers to specific section numbers in this appendix.

2.0 RELATIONSHIP OF PADD REGIONS TO U.S. CRUDE OIL MARKET

This section expands upon the discussion of U.S. Petroleum Administration for Defense District (PADD) regions by providing additional background information related to locations, characteristics, and refining and supply profiles of the PADDs and their interactions in the crude oil market. This section also includes refinery upgrading and expansion projects.

The 50 states and the District of Columbia are divided into five districts. The origin of PADDs dates from World War II when it was necessary to allocate the domestic petroleum supply. The "boundaries" between the different PADDs do not reflect either a regulatory or a business requirement; however, the boundaries allow the U.S. Energy Information Administration (EIA) a mechanism to consistently report the key attributes of the petroleum industry (inventory, crude processing levels, prices, consumption, etc.) over various time periods:

- PADD 1 (East Coast):
  - PADD 1A (New England): Connecticut, Maine, Massachusetts, New Hampshire, Rhode Island, and Vermont.
  - PADD 1B (Central Atlantic): Delaware, District of Columbia, Maryland, New Jersey, New York, and Pennsylvania.
  - PADD 1C (Lower Atlantic): Florida, Georgia, North Carolina, South Carolina, Virginia, and West Virginia.
- PADD 2 (Midwest): Illinois, Indiana, Iowa, Kansas, Kentucky, Michigan, Minnesota, Missouri, Nebraska, North Dakota, Ohio, Oklahoma, South Dakota, Tennessee, and Wisconsin.
- PADD 3 (Gulf Coast): Alabama, Arkansas, Louisiana, Mississippi, New Mexico, and Texas.
- PADD 4 (Rocky Mountain): Colorado, Idaho, Montana, Utah, and Wyoming.
- PADD 5 (West Coast): Alaska, Arizona, California, Hawaii, Nevada, Oregon, and Washington.

2.1 PADD SUPPLY CHARACTERISTICS

In general, each PADD reflects the typical supply patterns described in this section. PADD 1, the East Coast, is supplied by petroleum imports from foreign countries as well as refineries in PADD 3. Mid-Atlantic region refineries also supply PADD 1. PADD 3 refineries move product into PADD 1 via Colonial pipeline and Kinder Morgan's Plantation pipeline, while marine

movements from the Gulf Coast supply Florida. PADD 1 refineries process crude oil solely from foreign sources and in general require light, sweet, and therefore expensive crude oil relative to refiners in other U.S. PADD regions.

PADD 2 is a large region stretching from the Plains states (Oklahoma through North Dakota) and east to Ohio, Tennessee, and Kentucky. In general, PADD 2 is the Midwest district and it contains several distinct markets, with the Group and Chicago markets being subsets of PADD 2. The Group is the region of refineries, pipelines, and states from Oklahoma north to Minnesota and North Dakota. These are supplied by refiners in the Group as well as imports from PADD 3 via Magellan and Explorer pipelines. The Chicago market (northern and eastern region) also imports product from PADD 3 through the Explorer and TET[1] (Enterprise) pipeline systems. Overall, PADD 2 is far less dependent upon waterborne imports than PADD 1, as PADD 2 has significant refining capacity. PADD 2 processes significant volumes of Canadian crude.

PADD 3 is the major petroleum-refining center of the United States. Most refineries are located along the Gulf Coast (except some in the Texas Panhandle, New Mexico, and Arkansas) and process a high percentage of foreign crude, which arrives by marine vessels. Product from PADD 3 is shipped into PADD 1 and PADD 2 markets. Product not required for demands in PADDs 1 through 3 is often exported from PADD 3 to Latin America and European countries. PADD 3 has, to date, processed very limited volumes of Canadian crude.

PADD 4 is the Rocky Mountain region. This area has smaller refineries sized for relatively stable and low demand levels in this region. Refiners process both local domestic and Canadian crudes.

PADD 5 is the West Coast region. Refineries are concentrated in California and the Puget Sound region. The market is difficult to supply since it is isolated from other PADDs with no connecting pipelines, and California has unique environmental gasoline specifications that are difficult to produce and transport from other sources. Canadian crude moves primarily by pipeline into several Puget Sound refineries. Arizona, Nevada, and Oregon are supplied from California and Washington area refiners.

2.2 REFINERY CRUDE SELECTION PROCESS

Refineries perform the role of taking raw crude oil, boiling it into different fractions (naphtha, kerosene, gas oil, and residuum), and converting those fractions through additional processes (thermally heating, catalytic reactions, and cracking larger molecules into smaller ones) into blendstocks used for products such as gasoline, diesel, jet fuel, and heating oil. While most U.S. refineries have these functions, each refinery is unique in that it has different levels of processing capacity for handling all the fractions, and also has different metallurgy and treating processes that may or may not allow the refinery to run certain types of crude oils. These different “hardware” characteristics may cause one refiner to value a specific crude oil differently than another crude oil.

Each refinery has a programming model of their facility that reflects their specific capacities, limitations, and processing options (e.g., ability to maximize gasoline yield and diesel yield). These refinery configurations allow the refiner to evaluate specific crude supply options by entering the estimated crude oil cost, crude oil characteristics (percentages of naphtha, kerosene,

[1] Texas Eastern Transmission Pipeline

other distillates, or molecules in the crude oil), and the estimated and wholesale (spot) market prices for the refinery products.

Generally, refineries evaluate crude oils available to them based on their location and available crude oil supply. Refiners in PADD 1 focus on purchasing the cheapest foreign low-sulfur or sweet crudes they can, and select the crude oil that provides them the best product yield for the crude price. For example, PADD 1 refiners have been acquiring railcar supply of Bakken crude from North Dakota because, even with relatively high railcar shipping costs, Bakken crude arrives on the East Coast at a much lower price than other crude oil with similar characteristics imported from Africa.

Refiners in PADD 3 also rely heavily on foreign imports. However, many PADD 3 refiners are designed to process very heavy, cheaper crude oil than refiners in PADD 1. PADD 3 has a particularly high heavy crude oil processing capacity in part because of the proximity of large supplies of heavy crude oil in Mexico and Venezuela. In addition, Mexico and Venezuela, through their state-controlled oil companies, supported expansion of the heavy oil refining capacity through several joint-venture investments in Gulf Coast refineries to create a more profitable market for their heavy crude oil resources. Consequently, heavy, high-sulfur crude oil from Venezuela and Mexico, as well as newer heavy sources from Brazil and Colombia, are generally more optimal for these refiners to process than domestic or imported light, sweet crude.

A refiner that processes heavy crudes has invested significant amounts of money to install the equipment necessary to process them. A refiner that has made these investments has economic incentive to continue to process heavy crudes and may not be able to process significantly lighter crude slates as profitably. For example, if a refinery configured to process a heavy slate of crude oil was constrained to processing only a light crude oil slate, the volume of gasoline and diesel fuels produced could decrease by 15 to 20 percent. This, in most cases would be because the refiner's crude oil distillation process is designed for crudes with much less *light* components, such as naphtha, as heavier crudes. Attempting to process high percentages of light crude oil in these units would overload the distillation towers with light products and require a reduction in crude processing. Not only would the refiner usually be paying relatively more for that light slate of crude oil, it would be producing less gasoline and diesel from it. This is the primary reason refiners would not typically replace a heavy crude oil slate with 100 percent light crudes (IHS CERA 2011).

To go back to efficiently process more light crudes more economically, those refiners would have to make additional expenditures in refinery equipment to reconfigure the distillation towers to handle the lighter crude, and add capacity to process the higher naphtha content into finished gasoline. Thus, even if an influx of light domestic crudes makes them comparatively price advantaged to heavy crude oils, the size of capital expenditure and downed production time for refiners may offset potential benefits of trying to process more light crudes (Platts 2012).

That said, ultimately refiners will shift their crude slate if they determine that they could achieve a higher profit level by making changes to their crude runs or crude slate, including making investments to shift to a lighter crude slate. Refiners determine the optimal crudes to process like any other manufacturing company selecting the right raw materials to manufacture products. Refining companies (including refining divisions in large, integrated major oil companies) pay market prices for the crude oil they run and measure their profitability based on selling their product into the wholesale spot market with an added margin. They then use that margin to cover

their fixed and variable expenses. Refiners may select a more expensive crude oil if that crude oil's yield provides a greater margin than a cheaper crude.

Finally, some refiners have more flexibility to receive different crude oils than others based on location and storage capability. Refiners in the Gulf Coast area[2] generally have the greatest access since there are marine and pipeline options to receive both foreign and domestic crude and this will increase as more pipeline expansions are completed in the next several years. Some Gulf Coast area refiners may process as many as 50 different crude oils in a given year, constantly optimizing their crude selection based on available cargoes of crude oil. Meanwhile, others tend to rely on several major suppliers such as Saudi Arabia or Mexico for the bulk of their supply.

2.3 REFINERY UPGRADING AND EXPANSION PROJECTS STATUS

The prior 2011 Final EIS analysis and a study by EnSys Energy & Systems, Inc. incorporated a number of refinery expansion and/or upgrading projects in the proposed Project's impact assessment (EnSys 2010). For the most part, these projects are being constructed as noted in the Final EIS and detailed below. However, subsequent changes and updates have been made to some of these projects.

2.3.1 Midwest

Planned refinery upgrading projects at BP Whiting, Marathon Detroit, and BP-Husky Toledo are under construction and should be completed in 2013–2014. The projects will increase runs, or the oil volumes processed, of Western Canadian Sedimentary Basin (WCSB) heavy crude oil by about 0.400 million barrels per day (mmbpd), and reduce runs of light crude by 0.370 mmbpd. The upgrading at the WRB Refinery in Wood River, Illinois, (joint venture between Phillips 66 and Cenovus) was completed in 2011. Processing of heavy Canadian crude oil at Wood River has increased from about 0.030 mmbpd in 2009 to 0.185 mmbpd in the first half of 2012, with reductions in domestic light crude oil processing.

2.3.2 Gulf Coast

Valero has elected to cancel a major project at its Texas City refinery to construct a coker[3] (referred to in the 2011 Final EIS market analysis). Valero commented that due to the increased supply of domestic light crude oil and delivery uncertainty of heavy crude oil supplies from the WCSB (because of potential ongoing constraints on additional pipeline capacity, particularly uncertainty about the proposed Project), light/heavy crude price differentials would narrow and would make additional new investments to process heavy crude uneconomic (Reuters 2012).

Other identified major expansion and upgrading projects in the Gulf Coast have been completed. The Total Port Arthur project has been completed, increasing heavy crude oil runs by 0.070 mmbpd (using imports from Brazil and Venezuela) from 2009 and decreasing light imports.

[2] The Gulf Coast area refers to the region from Houston, Texas, to Lake Charles, Louisiana.

[3] A coker is a refinery process that converts heavy residue oil from the rest of the crude oil (oil that boils at over 1000 degrees Fahrenheit) into lighter oils for further processing. The coker also produces petroleum coke, a fuel similar to coal. Cokers enable refineries to manufacture a higher yield (quantity) of gasoline and distillate fuel from heavy crude oil.

The Marathon major refinery expansion and upgrading project in Garyville, Louisiana, was completed in 2010. Marathon has increased imported crude runs significantly in 2011 and 2012, with imports increasing from about 0.138 mmbpd in 2009 to 0.380 mmbpd in 2012. Heavy crude imports have increased from 0.060 to 0.100 mmbpd, with the increase primarily heavy Canadian.

The Shell Motiva Port Arthur expansion was completed in early 2012. This project would increase Shell Motiva crude oil refining runs by 0.325 mmbpd, making the refinery the largest in the United States. While completed, the refinery suffered a fire in the new crude unit, which has led to a possible delay in full operation until 2013.

Both the Marathon Garyville and the Shell Motiva projects appear to have resulted in significant increases of crude imports from Saudi Arabia. Since Motiva is a joint venture between Shell and Saudi Aramco, there may be some equity obligations that may limit the option or the volume of WCSB crude oil that could be processed, and Marathon would be looking for pipeline alternatives to get WCSB crude oil into the Louisiana market. While it appears both refiners could run additional heavy crude, limited access to heavy Canadian and/or additional Mexican and other foreign heavy crudes have resulted in increased runs of more expensive and lighter Middle East crude. The need to turn to more Middle East crude was anticipated in the EnSys report as a likely outcome if there were long-term constraints on North American pipeline capacity.

3.0 COMPARISON OF ANNUAL ENERGY OUTLOOK 2013, 2010, AND THE ENSYS LOW-DEMAND OUTLOOKS

This section provides the data used for generating the figures in the Supplemental EIS that compare the demand outlooks in the U.S. Energy Information Administration's (EIA) Annual Energy Outlook (AEO) 2013, AEO 2010, and the EnSys Low Demand outlook (Table 1 and Table 2).

Table 1 U.S. Product Demand Outlook

Type	Outlook	2015	2020	2025	2030	2035	2040
LPG	AEO 2010	2.2	2.4	2.3	2.3	2.2	
	Low Demand	2.2	2.3	2.3	2.3		
	AEO 2013	2.6	2.9	3.0	2.9	2.8	2.8
Gas/E85	AEO 2010	9.3	9.4	9.6	9.9	10.3	
	Low Demand	9.2	8.6	7.8	7.1		
	AEO 2013	8.6	8.4	7.9	7.5	7.2	7.2
Jet/Distillate	AEO 2010	5.8	6.0	6.2	6.6	6.7	
	Low Demand	5.7	5.7	5.7	5.4		
	AEO 2013	5.8	6.0	6.1	6.2	6.2	6.3
Residual Fuel	AEO 2010	0.7	0.6	0.6	0.6	0.7	
	Low Demand	0.7	0.6	0.6	0.5		
	AEO 2013	0.5	0.5	0.5	0.5	0.5	0.5

Type	Outlook	2015	2020	2025	2030	2035	2040
Other	AEO 2010	3.3	2.8	2.8	2.8	2.2	
	Low Demand	3.3	2.7	2.7	2.6		
	AEO 2013	2.0	2.0	2.0	2.0	2.1	2.1
Total Liquids Demand	AEO 2010	21.3	21.2	21.5	22.2	22.0	
	Low Demand	21.1	19.9	19.1	17.9		
	AEO 2013	19.5	19.8	19.5	19.0	18.9	18.9

Sources: EIA 2010; EIA 2013; EnSys 2010.
AEO = Annual Energy Outlook, LPG = liquefied petroleum gases.

Table 2 Global Liquids Demand Outlook

	2015	2020	2025	2030	2035	2040
AEO 2010	90.9	95.6	100.7	105.9	111.7	
Low Demand	93.0	94.5	100.9	102.2		
AEO 2013	93.2	99.7	105.3	108.5	110.3	112.9

Sources: EIA 2010; EIA 2013; EnSys 2010.
AEO = Annual Energy Outlook.

4.0 DISCOUNTS ON PRICE OF INLAND CRUDE DUE TO LOGISTICAL CONSTRAINTS

This section provides additional information and background related to the discounts of inland crude prices due to logistical constraints in the crude oil market. Supplemental data and narrative are also provided to explain the effects of these discounts on both U.S. and global refinery and import/export trends.

Crude oil absolute prices can vary for a number of reasons, including global demands for petroleum, geo-political concerns in the Middle East, currency values, and the activities of market speculators. Typically, prices for petroleum products tend to follow prices for crude oil, but in some cases product surpluses or shortages can cause product price differentials to crude oil to vary. Similarly, prices for different crude oils can vary due to quality considerations. For example, high-sulfur crude oils and crudes that are denser (heavier) than others require more intense refining to crack and rearrange the hydrocarbon molecules into transportation fuels like gasoline and diesel. Consequently, these crude oils tend to be priced lower than crudes that are less dense and have less sulfur and other contaminants that must be refined.

In addition, crudes of similar type (light or heavy) may have different prices based on where they are located and how those crudes are delivered into a refinery. For example, three major light crude types have traditionally influenced U.S. light crude pricing: light crudes based on Brent crude pricing (North Sea crudes, West African crudes) for delivery to the U.S. Gulf Coast; Light Louisiana Sweet (LLS) for delivery to the U.S. Gulf Coast; and West Texas Intermediate (WTI) for delivery to Cushing, Oklahoma.[4] Historically, crude oil prices in Europe and Africa based on Brent pricing typically have had a $2 to $3 per barrel discount to LLS. The producers of those

[4] WTI is the crude oil underlying the New York Mercantile Exchange (NYMEX) crude oil futures contracts. The basis of these contracts is delivery of WTI into Cushing, Oklahoma.

crudes need to provide that discount to account for the additional $2 to $3 transportation cost per barrel to ship their crude oil across the Atlantic Ocean to be competitive with LLS and other foreign crudes available in the U.S. Gulf Coast.

More recently since early 2011, the growth in domestic light crude production (Bakken, Niobrara, and Eagle Ford crudes) and displacement of light crude by several refiners streaming[5] heavy crude upgrading projects created a crude oil bottleneck at the Cushing, Oklahoma, hub. With no viable options to move light crude to Gulf Coast area refineries, the crude at Cushing and further north to the Bakken region became heavily discounted by producers to remain competitive against traditional markers such as LLS or Brent[6] (Figure 1). This led to the prevailing highly unusual market situation where a Gulf Coast area refiner processing LLS would have had to pay as much as $20 to $25 per barrel more (at various times) for a light crude than a refiner in Oklahoma would pay for a crude with similar yields (WTI)[7]. This situation gives refiners in the Midcontinent region[8] that purchase crude oil based on the WTI price a significant crude oil cost advantage over Gulf Coast area refiners.

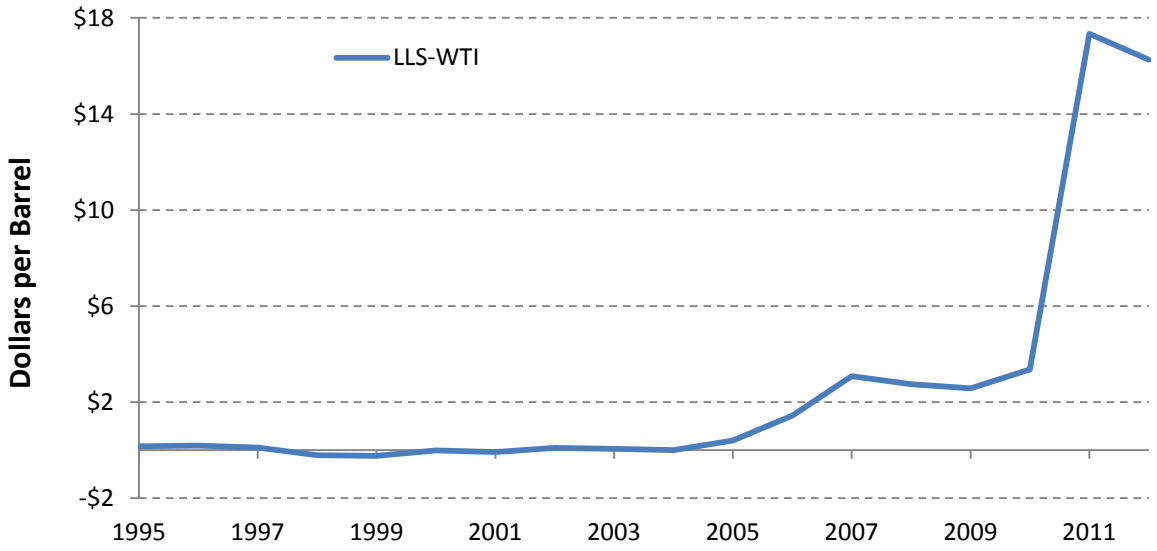

Source: Bloomberg 2012.
Notes: Bloomberg WTI pricing (ticker symbol: USCRWTIC Index); Bloomberg LLS pricing (ticker symbol: USCRLLSS Index). LLS = Light Louisiana Sweet crude, WTI = West Texas Intermediate crude.

Figure 1 Annual Average Price Spreads, LLS minus WTI, dollars/barrel

[5] Streaming is the process of bringing new processing units into operation.
[6] A crude oil marker or benchmark is a type of oil with similar characteristics, such as weight (heavy, intermediate, or light), sulfur content, and other chemical features that allow buyers and sellers to understand what is being traded. Oil purchased by U.S. refineries from overseas would be discounted to allow for cost differentials in transport.
[7] This analysis is supported by an independent academic paper (Borenstein and Kellogg 2012).
[8] The Midcontinent region includes refiners in the Plains states (Oklahoma, Kansas, Nebraska South Dakota, and North Dakota). In sum, this is the PADD 2 region with some additional refiners in north Texas.

The lack of pipeline capacity to move crude from Cushing to the Gulf Coast area created a bottleneck for both light and (increasingly) heavy crudes as Canadian production increased. At the time of the Final EIS in 2011, there was clear evidence of Midcontinent crude pricing discounts versus the Gulf Coast area (which increased substantially in early 2011). However, this pricing inversion is likely to continue for some time as new light crude production growth continues to outpace the development of pipeline capacity to move the Cushing surplus south to the Gulf Coast area. The larger pipeline projects (Seaway Reversal Phase 2, Seaway "Twin" line, and TransCanada Gulf line) will be available beginning in late 2013 and 2014, and rail takeaway from the Bakken to the East, West, and Gulf Coasts is clearly developing, which may help reduce the Cushing surplus somewhat in the interim. The initial phase of the Seaway reversal (Phase 1) has already been completed and became operational in May 2012. Impact on the LLS versus WTI differential has been indiscernible.

The steep discounts in the Midcontinent and upper Midwest/Chicago crude prices have resulted in that region's refiners attempting to maximize crude runs (that is, have the best mix of light versus heavy oil to produce the highest refinery margin). According to market data over the period (Figure 2), despite the discount in crude price, wholesale[9] product prices in the Chicago and Group 3 markets[10]—for the most part—did not follow crude price discounts. Figure 2 shows that during the period that WTI crude has been steeply discounted to similar crude oils on the Gulf Coast (shown by the blue line in Figure 2), the wholesale price of gasoline in the Midwest (Chicago and Group 3 region) remained generally higher than that on the Gulf Coast (shown by the green and red lines in Figure 2).

Gasoline in the Midwest was not cheaper than gasoline on the Gulf Coast because the entire Midwest and Group 3 region lacks sufficient refinery capacity to meet gasoline and diesel demands, and the region requires additional gasoline and diesel supply from the Gulf Coast (via Explorer and Magellan pipeline systems.) Therefore, product prices typically reflect Gulf Coast market plus pipeline costs. The actual wholesale product market behavior (that is, prices) demonstrated that consumers in the Midwest did not benefit from crude surplus price discounts. Instead, the beneficiary was Midwest refiners as the stable product prices resulted in extraordinarily high refinery gross margin levels and, therefore, higher refinery profit levels in the Chicago and Group 3 markets (Figure 3 and Figure 4). [11]

[9] Wholesale prices are used since retail prices include federal, state, and local taxes and other charges that can vary from state-to-state or within a state.

[10] Group 3 market is the term for spot market product prices in the Plains states west of the Mississippi River. It specifically entails delivery of finished petroleum products along key pipelines serving Oklahoma, Missouri, Kansas, Iowa, Nebraska, Minnesota, South Dakota, and North Dakota. *Group 3* is the industry nomenclature for the oil refining and distribution system serving these markets.

[11] Midwest product supply has been supplemented by shipments into Explorer or Magellan pipelines from the Texas and Louisiana markets. Higher refinery production and lower demands in the Midwest could result in surplus product supply. However, traders and refiners have an option to ship less on Explorer and Magellan to the Midwest and divert more supply to the East Coast or export market.

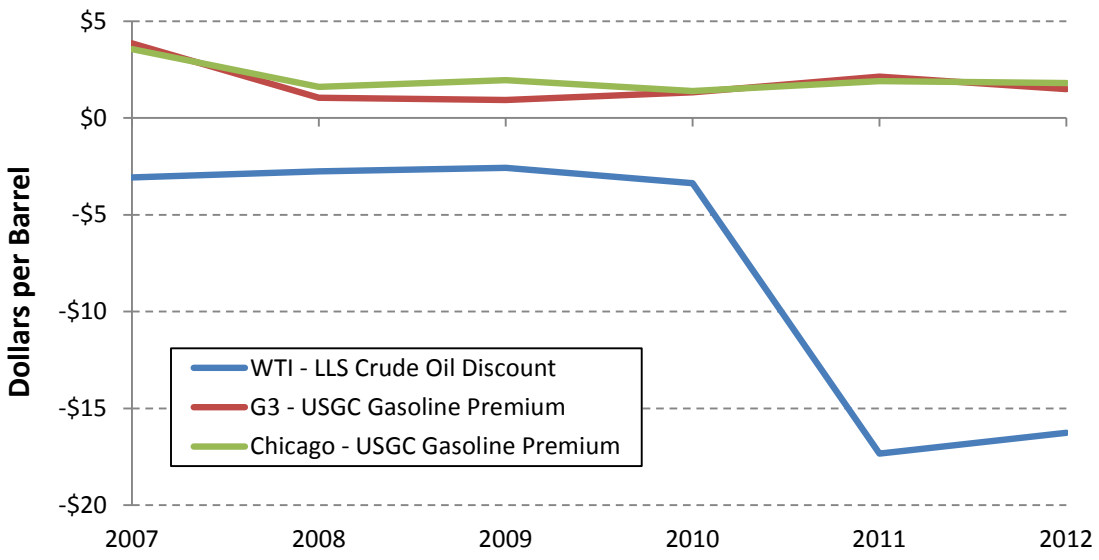

Source: Bloomberg 2012.

Note: Bloomberg WTI pricing (ticker symbol: USCRWTIC Index). Bloomberg LLS pricing (ticker symbol: USCRLLSS Index). Danaher Oil Midcontinent unleaded gas pricing (ticker symbol: G3OR87PC Index). Bloomberg U.S. Gulf Coast reformulated blendstock for oxygenate blending pricing (ticker symbol: RBOBG87P Index). Bloomberg Chicago conventional blendstock for oxygenate blending pricing (ticker symbol: CHOR87PC Index).

bbl = barrel, LLS = Light Louisiana Sweet crude, USGC = U.S. Gulf Coast, WTI = West Texas Intermediate crude.

Figure 2 Average Crude Oil and Gasoline Price Spreads, dollar/bbl spread

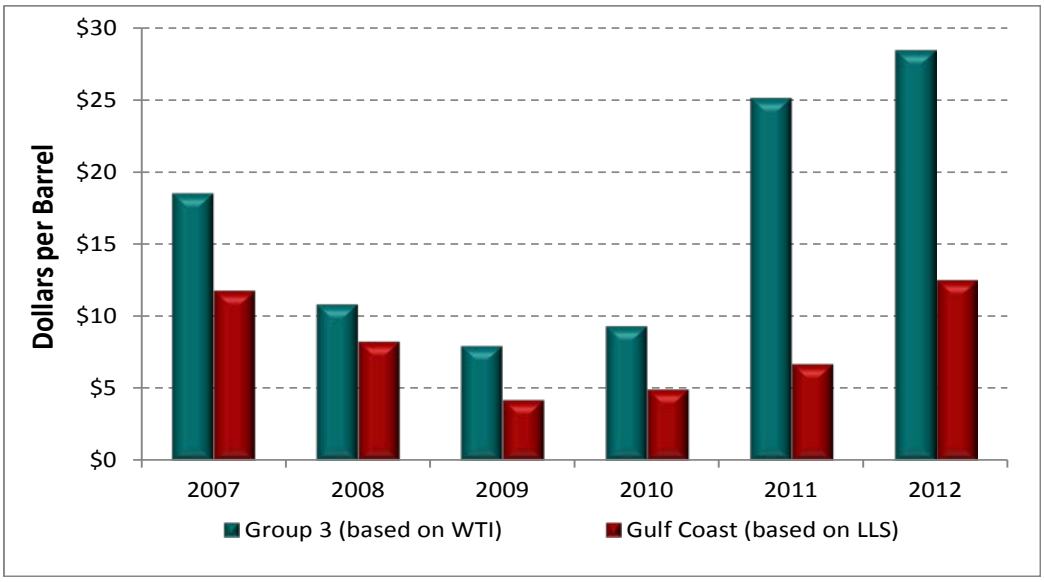

Source: Bloomberg 2012.
Notes:

1. Bloomberg WTI pricing (ticker symbol: USCRWTIC Index). Danaher Oil Midcontinent unleaded gas pricing (ticker symbol: G3OR87PC Index). Danaher Oil Midcontinent ultra-low sulfur diesel pricing (ticker symbol: G3ORUTLS Index). Bloomberg LLS pricing (ticker symbol: USCRLLSS Index). Bloomberg U.S. Gulf Coast reformulated blendstock for oxygenate blending pricing (ticker symbol: RBOBG87P Index). Bloomberg U.S. Gulf Coast ultra-low sulfur diesel pricing (ticker symbol: DIEIGULP index).
2. Group 3 margins are a 3-2-1 spread using WTI crude. Gulf Coast area margins are a 3-2-1 spread using LLS crude.

LLS = Light Louisiana Sweet crude, WTI = West Texas Intermediate crude.

Figure 3 Refinery Margins: Group 3 and Gulf Coast Area

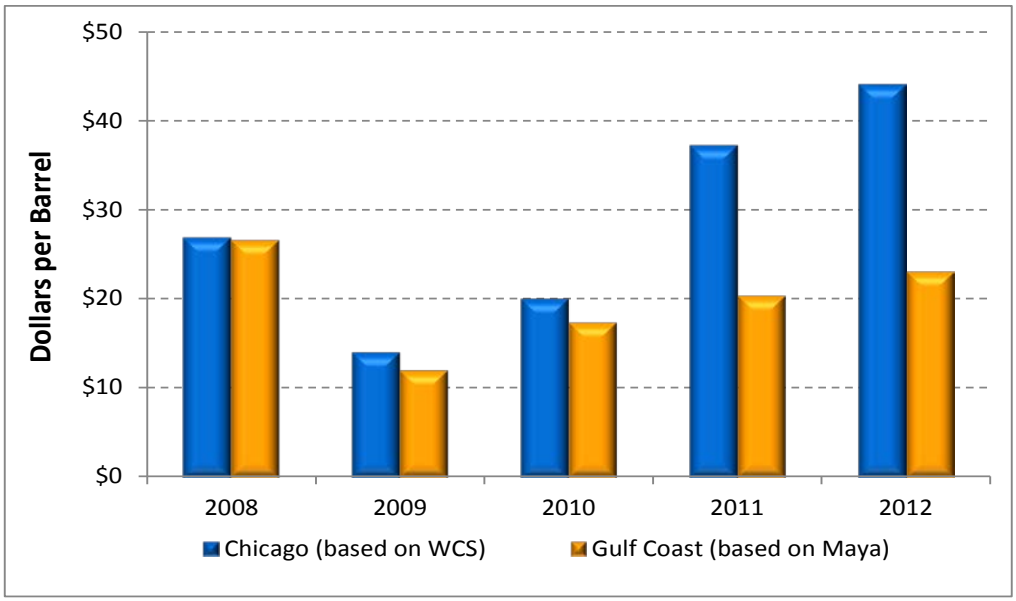

Source: Bloomberg 2012.
Notes:
1. Bloomberg Maya pricing (ticker symbol: LACRMAUS Index). Bloomberg Chicago conventional blendstock for oxygenate blending pricing (ticker symbol: CHOR87PC Index). Bloomberg Chicago ultra-low sulfur diesel pricing (ticker symbol: CHORUTLS Index). Bloomberg Western Canada Select (WCS) crude pricing (ticker symbol: USCRWCAS Index). Bloomberg U.S. Gulf Coast reformulated blendstock for oxygenate blending pricing (ticker symbol: RBOBG87P Index). Bloomberg U.S. Gulf Coast ultra-low sulfur diesel pricing (ticker symbol: DIEIGULP Index).
2. Chicago margins are a 3-2-1 spread using delivered WCS crude. Gulf Coast margins are a 3-2-1 spread using delivered Maya crude.

WCS = Western Canada Select crude.

Figure 4 Refinery Margins: Chicago and Gulf Coast Area

The WTI crude price discount versus Gulf Coast area prices described above may be reduced after the new pipelines from Cushing to the Gulf Coast area are constructed. In fact, recent activity to move Bakken crude into Louisiana by rail, and to move Eagle Ford shale oil from South Texas into Louisiana via the Louisiana Offshore Oil Port (LOOP)[12] have appeared to result in a reduction in the long-term spread relationship between LLS and Brent-based supply (see Figure 5). Historically, Brent crude oil has had a $2 to $3 per barrel discount to LLS to account for transportation costs from Europe to the Gulf Coast. It is important to recognize that the recent compression of the spread between LLS and Brent crude indicates that cargoes of Brent-based crude oil will appear more expensive to refiners in the Gulf Coast after transportation costs are added. This compression is the economic driver behind the reductions in imports of light sweet crudes into the Gulf Coast already being seen.

[12] LOOP is the Louisiana Offshore Oil Port which is typically used to offload foreign cargoes of crude oil into the Louisiana crude pipeline systems to refiners.

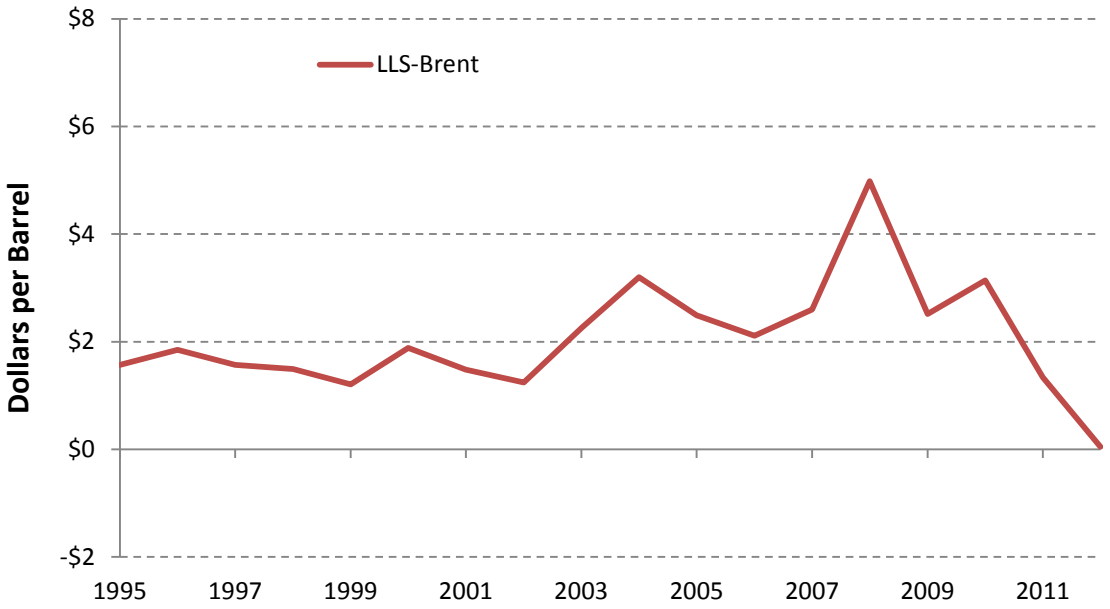

Source: Bloomberg 2012.
Note: Bloomberg LLS pricing (ticker symbol: USCRLLSS Index). Bloomberg Brent pricing (ticker symbol: EUCRBRDT Index).
LLS = Light Louisiana Sweet crude.

Figure 5 Annual Average Price Spreads, LLS minus Brent, dollars/barrel

Furthermore, a recent document published by EIA supports the contention that increased supply into the market could lead to lower crude prices:

> The availability of domestic light crude to U.S. Gulf Coast refineries is expected to continue increasing as pipeline expansions allow more crude to move to the U.S. Gulf Coast. This increased light crude supply could exert downward pressure on Gulf Coast light crude prices (EIA 2012b).

The extent of the potential Gulf Coast area crude oil price discounts versus foreign crudes would be unlikely to approach the deep discounts seen at Cushing in the past 2 years. This is because, as discounts grow with added supply (using simple supply and demand economics), Gulf Coast area refiners may see incentives to reconfigure their processing capacity to increase their ability to process lighter crude oil and produce more gasoline and diesel fuel. In addition, East Coast refiners may see incentive to use Jones Act[13] vessels to move crude to East Coast refineries. The decline in the cost differential between LLS and Brent would likely continue to be a discount (LLS at or below Brent price) as more domestic crude reaches the Gulf Coast area. The discount would then periodically rise and fall as refiners adapt to the new price structure.

This rationale could also apply to the impact of additional heavy crude supply as projects are completed that increase the transport capacity for WCSB heavy crudes to the Gulf Coast area.

[13] The Jones Act (Section 27 of the Merchant Marine Act of 1920) regulates U.S. maritime commerce by requiring ships moving between two U.S. ports to be United States-flagged, built in the United States, owned by U.S. citizens, and crewed by U.S citizens and permanent residents.

Increased WCSB heavy crude volumes into the Gulf Coast area market could also put downward pressure on volumes of heavy Venezuelan, Mexican, Brazilian, and Columbian crudes; those suppliers may have to reduce their prices to compete with the new WCSB heavy crude volumes. With both light and heavy crudes pushing prices of similar grades of foreign crude down, the relative spread between light and heavy crudes may, over time, be stable.[14]

5.0 PIPELINE AND RAIL COST INFORMATION

The following provides information related to the costs of transporting crude oil via pipeline and rail infrastructure. Table 3 and Table 4 show pipeline transport costs based on various delivery levels commitment for heavy and light crude. Table 5 shows estimated costs for crude oil transport using rail infrastructure.

Table 3 Impact of Pipeline Commitment Period on Tariffs: Example 1

	TransCanada ($/bbl)		Seaway ($/bbl)
Heavy Crude	**Hardisty to Cushing**	**Hardisty to Wood River**	**Cushing to Gulf Coast Area**
Uncommitted	$9.73	$8.75	$4.32
5 years	NA	NA	$3.57
10 years	$6.63	NA	$3.32
20 years	$6.23	$5.42	NA

Sources: TransCanada 2012a and 2012b; Seaway 2012.

Note: Seaway committed tariffs based on commitment of 0 to 99,999 barrels per day. For currency conversion, US$1=CAN$0.98. For volume conversion, 1 cubic meter = 6.2898 barrels.

bbl = barrels; NA = not applicable.

Table 4 Impact of Pipeline Commitment Period on Tariffs: Example 2

	TransCanada ($/bbl)		Seaway ($/bbl)
Light Crude	**Hardisty to Cushing**	**Hardisty to Wood River**	**Cushing to Gulf Coast Area**
Uncommitted	$9.02	$8.00	$3.82
5 years	NA	NA	$3.07
10 years	$6.03	NA	$2.82
20 years	$5.64	$4.78	NA

Sources: TransCanada 2012a and 2012b; Seaway 2012.

Note: Seaway committed tariffs based on commitment of 0-99,999 barrels per day. For currency conversion, US$1=CAN$0.98. For volume conversion, 1 cubic meter = 6.2898 barrels.

bbl = barrels, NA = not applicable.

[14] However, if the proposed project is not approved, and other pipeline projects connecting PADD 2 and the WCSB to the Gulf Coast area do not go forward, the higher cost of rail movements of heavy crude may put minimal pressure on heavy crude prices, in which case the spread between light and heavy would be expected to narrow.

Table 5 Estimated Delivered Cost via Rail on Selected Movements of Crude[a]

Origin	Destination	Rail Route	Dollars per Barrel
Dilbit			
Lloydminster, SK	Port Arthur, TX	CPRS-St. Paul-UP	$15.62
Lloydminster, SK	Stroud, OK[b]	CN-Superior, WI-UP (SLWC delivery)	$13.13
Syncrude			
Lloydminster, SK	Port Arthur, TX	CPRS-St. Paul-UP	$14.63
Bakken			
Epping, ND	Stroud, OK[b]	BNSF (SLWC deliver)	$7.48
Epping, ND	Philadelphia, PA	BNSF-Chicago-CSXT	$10.55
Epping, ND	St. John, NB	BNSF-EOLA, IL-CN-St. Jean, PQ-MMA	$13.72

Source: Hellerworx Inc. 2013.

[a] Estimated delivered cost includes rail rate from origin to destination, loading railcars at origin rail terminal, unloading cars at destination rail terminal, and full service lease for rail tank car. Rail rate estimates developed by calculating Long Run Variable Cost and applying an estimated contribution margin of 137 percent (average for 2010). The rail rate estimates are not published tariffs; some crude oil rates are contained in published tariffs but crude would move mostly on contract rates with commitments of between 3 to 7 years.

[b] Stroud, Oklahoma, is the closest rail terminal to Cushing (approximately 17 miles via pipeline).

BNSF = Burlington Northern-San Francisco Railway, CN = Canadian National, CPRS = Canadian Pacific Railway System, CSXT = CSX Transportation, dilbit = diluted bitumen, EOLA = Eola Yard, a BNSF Railway yard in Aurora, Illinois, IL = Illinois, MMA = Montreal, Maine & Atlantic Railway, Ltd., NB = New Brunswick, ND = North Dakota, OK = Oklahoma, PA = Pennsylvania, PQ = the Province of Quebec, now abbreviated QC, SLWC = Stillwater Central Railroad, SK = Saskatchewan, TX = Texas, UP = Union Pacific Railroad Company, WI = Wisconsin.

6.0 COMPARISON OF U.S. PRODUCT DEMAND, ANNUAL ENERGY OUTLOOK 2010 AND 2012

The difference in U.S. product demand for total liquids is shown in Figure 6. Total liquids includes liquefied petroleum gases (LPG), E85, motor gasoline, jet fuel, distillate fuel oil, residual fuel oil, and other fuels (including aviation gasoline, petrochemical feedstocks, lubricants, waxes, asphalt, road oil, etc.). Lower U.S. demand forecasts in 2012 are a significant driver of U.S. import and export trends. Looking at projections for 2012, 2015, and 2020, import/export volume ratios in the AEO 2010 forecast range from 1.65 to 1.81. Comparatively, import/export ratios for the same time period range from 0.95 to 1.01 in the AEO 2012 forecast.

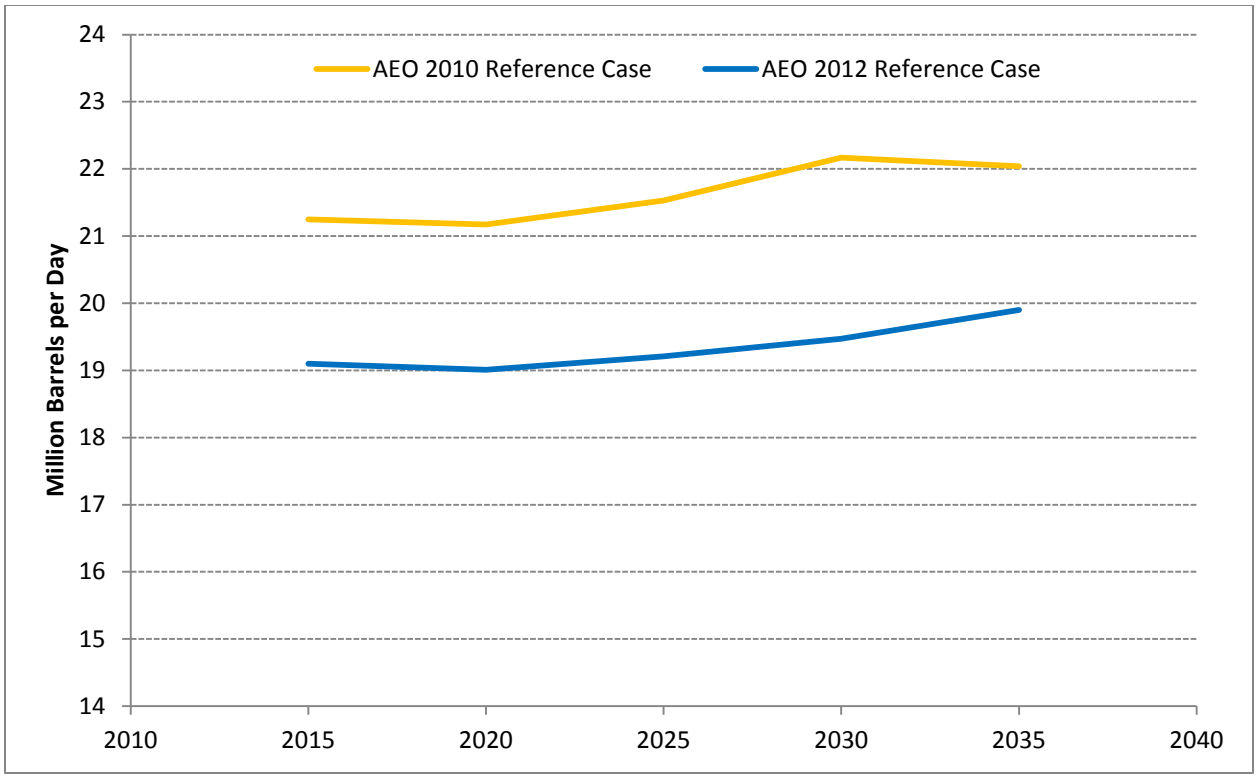

Source: EIA 2010, EIA 2012.
AEO = Annual Energy Outlook.

Figure 6 Comparison of AEO 2010 and 2012 U.S. Product Demand – Total Liquids

7.0 CRUDE BY RAIL LOADING, OFF-LOADING, AND TRANSLOADING FACILITIES

In this section, the following tables (Table 6 through Table 14) provide specific information to supplement the narrative and figures (1.4.6-4 and 1.4.6-5) in the Market Analysis related to crude by train loading, off-loading, and transloading facilities.

Table 6 PADD 1 Crude by Rail Offloading

Crude-by-Rail Terminal/Operator/Owner(s)	Estimated Capacity (bpd)	Estimated In-Service Date
Enbridge Rail/Canopy Prospecting/Eddystone Rail Company/ Philadelphia, PA	60,000	2014
Buckeye Partners, L.P./Albany NY Terminal/ Albany, NY	135,000	In service
Carlyle Refinery/Philadelphia Energy Solutions/ Philadelphia, PA	140,000	2013
Genesis Energy, L.P./Walnut Hill Terminal/Walnut Hill, FL/ Saraland Terminal Mobile, AL	60,000	In service
Global Partners LP/Albany, NY	160,000	In service

Crude-by-Rail Terminal/Operator/Owner(s)	Estimated Capacity (bpd)	Estimated In-Service Date
NuStar Energy L.P./Paulsboro, NJ	30,000	2013
PBF Energy/Delaware City, DE	110,000	In service
Plains All American Pipeline, L.P./Yorktown, VA	130,000	2013
Sunoco/Eagle Point Terminal/Eagle Point, NJ	20,000	In service
U.S. Development Group/East Coast, (Undisclosed)	65,000	2014
Irving Refinery/St. John, NB	90,000	In service
Total	**1,000,000**	

Source: Hart 2012a; Company and Media Reports.
bpd = barrels per day, AL = Alabama, bpd = barrels per day, DE = Delaware, FL = Florida, L.P. = Limited Partnership, LP = Limited Partnership, NB = New Brunswick, NJ = New Jersey, NY = New York, PA = Pennsylvania, PADD = Petroleum Administration for Defense District, VA = Virginia.

Table 7 PADD 2 Bakken Rail Loading

Crude-by-Rail Terminal/Operator/Owner(s)	Estimated Capacity (bpd)	Estimated In-Service Date
Hess/Tioga, ND - Phase 1	55,000	2012
Hess/Tioga, ND - Phase 2	75,000	2014
Lario Logistics - Bakken Oil Express Phase 1/Dickinson, ND	100,000	2011
Lario Logistics - Bakken Oil Express Phase 2/Dickinson, ND	150,000	2012
Lario Logistics - Bakken Oil Express Phase 3/Dickinson, ND	250,000	2014
Savage-KCS/Trenton, ND	90,000	2012
Musket, Dore, ND	60,000	2012
Watco - KMEP/Dore, ND	70,000	2012
Enbridge Berthold Phase 2/Berthold, ND	70,000	2013
Enbridge Berthold Phase 1/Berthold, ND	10,000	2012
Plains All American Pipeline Ross Complex Phase 1/Ross, ND	20,000	2011
Plains All American Pipeline Ross Complex Phase 2/Ross, ND	45,000	2012
U.S. Development Group - CP Van Hook Phase 1/ Van Hook Township, ND	35,000	1Q2012
U.S. Development Group - CP Van Hook Phase 2/ Van Hook Township, ND	35,000	4Q2012
Great Northern Mid-Stream Phase 1/Fryburg, ND	70,000	2012
Great Northern Mid-Stream Phase 2/Fryburg, ND	70,000	2013
Watco - EOG/Stanley, ND	65,000	2009
Rangeland COLT/Epping, ND	120,000	2012
88 Oil - ND Port Services/Minot, ND	30,000	2008
Donnybrook, ND	30,000	2008
Stampede, ND	30,000	2008
Dakota Plains Transport Solutions (CP) Phase 1/New Town, ND	20,000	2010
Dakota Plains Transport Solutions (CP) Phase 2/New Town, ND	30,000	2011

Crude-by-Rail Terminal/Operator/Owner(s)	Estimated Capacity (bpd)	Estimated In-Service Date
Basin Transload Phase 1/Zap, ND	5,000	2010
Basin Transload Phase 2/Zap, ND	5,000	2013
Total	**1,540,000**	

Source: Hart 2012a; Company and Media Reports.
bpd = barrels per day, CP = Canadian Pacific Railway System, EOG = EOG Resources, Inc., KCS = Kansas City Southern Railway Company, KMEP = Kinder Morgan Energy Partners LP, ND = North Dakota, PADD = Petroleum Administration for Defense District, Q = quarter.

Table 8 PADD 2 Non-Bakken Loading

Crude-by-Rail Terminal/Operator/Owner(s)	Estimated Capacity (bpd)	Estimated In-Service Date
Mercuria Energy Trading, Okeene, OK	30,000	2012
Logimarq Transloading - Marquis Energy Trading/Sayre, OK	30,000	2011
Oklahoma Dept. of Transportation (OKDOT) Farmrail Phase l/Sayre, OK	10,000	2011
OKDOT Farmrail Phase 2 /Sayre, OK	30,000	2013
Chesapeake Phase 1/ Westhorn, OK	10,000	2013
Chesapeake Phase 2/ Westhorn, OK	140,000	2016E
CrossTex Energy/Ohio Northern	55,000	2012
Total	**305,000**	

Source: Hart 2012a; Company and Media Reports.
bpd = barrels per day, OK = Oklahoma, OKDOT = Oklahoma Dept. of Transportation, PADD = Petroleum Administration for Defense District.

Table 9 PADD 2 Rail to Marine Transloading Facilities

Crude-by-Rail Owners/Operators/Venture Partners	Estimated Capacity (bpd)	Estimated In-Service Date
Seacor Energy-GatewayTerminals / Sauget, IL	130,000	2011
Marquis Energy / Hayti, MO	45,000	2012
Marquis Energy / Hennepin, IL	35,000	2012
Seacor Energy-Gateway Terminals/ St. Louis, MO	40,000	2012
Total	**250,000**	

Source: Hart 2012a; Company and Media Reports.
bpd = barrels per day, IL = Illinois, MO = Missouri, PADD = Petroleum Administration for Defense District.

Table 10 PADD 2 Stroud to Cushing Loading/Transloading/Offloading Facilities

Crude-by-Rail Terminal/Operator/Owner(s)	Estimated Capacity (bpd)	Estimated In-Service Date
EOG Stroud OK to Cushing OK	60,000	2011
Watco-KMEP I Dore Phase 1/Stroud, OK to and from Cushing	140,000	2012
Watco-KMEP I Dore Phase 2/Stroud, OK to and from Cushing	140,000	2015
Total	**340,000**	

Source: Hart 2012a; Company and Media Reports.
bpd = barrels per day, EOG = EOG Resources, Inc., KMEP = Kinder Morgan Energy Partners LP, OK = Oklahoma, PADD = Petroleum Administration for Defense District.

Table 11 PADD 3 Rail Terminals

Gulf Coast Area Destination Terminals	Estimated Capacity (bpd)	Estimated In-Service Date
Cima Energy/Houston, TX	65,000	2011
GT Logistics GT Omni Port/Port Arthur, TX	125,000	2012
NuStar-EOG Initial Startup/St. James, LA	10,000	2011
NuStar-EOG Phase 2 Start/St. James, LA	60,000	2012
NuStar-EOG Phase 2 Realization Phase/St. James, LA	30,000	2013
NuStar-EOG Phase 3/St. James, LA	40,000	2013
U.S. Dev. Group Phase 1/St. James, LA	65,000	2011
Triafigura Texas Dock & Rail/Corpus Christi, TX	65,000	2013
Crosstex Energy, Phase 1, Riverside, LA	15,000	2012
Crosstex Energy, Phase 2, Riverside, LA	30,000	2015
Watco Greens Port Industrial Park/Houston, TX	65,000	2011
U.S. Dev. Group Phase 2/St. James, LA	65,000	2012
Sunoco, Nederland, TX	15,000	2012
CN/Arc, Mobile, AL	25,000	2013
Genesis Energy, Natchez, MS	10,000	2013
Genesis Energy, Baton Rouge, LA	70,000	2Q 2014
Arc Terminals LP, Saraland, AL	75,000	2013
Estimated Total	**830,000**	
Permian Origination Loading Crude-by-Rail Sendout Terminals		
EOG San Angelo, TX	5,000	2012
Atlas Oil - Phase 1/Odessa, TX	10,000	2011
Atlas Oil - Phase 2/Odessa, TX	25,000	2014
Cetane Energy & Murex N.A., Ltd./Carlsbad, NM	75,000	2012
Martin Midstream/KMEP Pecos Valley Phase 1/Pecos, TX, Permian	65,000	2012
Martin Midstream/KMEP Pecos Valley Phase 2/Pecos, TX, Permian	145,000	2013
Martin Midstream/KMEP Pecos Valley Phase 3/Pecos, TX, Permian	120,000	2014
Martin Midstream/KMEP Pecos Valley Phase 4/Pecos, TX, Permian	90,000	2015
Mercuria Energy Trading Panhandle/Panhandle, TX, Permian	30,000	2013
Iowa Pacific Holdings LLC/LogiBio LLC, Lovington, NM	NA	2013
Atlas Oil Company, Monahans, TX	NA	Operational
Atlas Oil Company, Odessa, TX	NA	2011
Atlas Oil Company, Albuquerque, NM	NA	2009
Estimated Total	**565,000**	

Gulf Coast Area Destination Terminals	Estimated Capacity (bpd)	Estimated In-Service Date
Eagle Ford Origination Loading Crude-by-Rail Sendout Terminals		
U.S. Development Group, Eagle Ford Crude Terminal/ Cotulla (Gardendale), TX	40,000	2011
EOG Resources/Hardwood, TX	25,000	2012
Atlas Oil Company, La Feria, TX	NA	Operational
Estimated Total	**65,000**	

Source: Hart 2012a; Company and Media Reports
bpd = barrels per day, AL = Alabama, EOG = EOG Resources, Inc., GT = GT Logistics LLC, LA = Louisiana, LLC = Limited Liability Company, LP = Limited Partnership, Ltd. = Limited, MS = Mississippi, N.A. = North America, NA = not applicable, NM = New Mexico, PADD = Petroleum Administration for Defense District, TX = Texas.

Table 12 PADD 4 Rail Loading

Crude-by-Rail Terminal	Estimated Capacity (bpd)	Estimated In-Service Date
U.S. Development Group, Niobrara Crude Terminal Phase 1/Carr, CO	35,000	2011
U.S. Development Group, Niobrara Crude Terminal Phase 2/Carr, CO	35,000	2012
Musket - Broe Group Great Western Industrial Park/Windsor, CO	15,000	2012
Watco Swan Ranch/Cheyenne, WY	65,000	2013
Plains All American, Tampa, CO	70,000	2013
Granite Peak Development/Cogent Energy Solutions/Casper, WY	120,000	2013
Eighty-Eight Oil/Guernsey, WY	80,000	2013
Total	**420,000**	

Source: Hart 2012a; Company and Media Reports.
bpd = barrels per day, CO = Colorado, PADD = Petroleum Administration for Defense District, WY= Wyoming.

Table 13 PADD 5 Rail Offloading/Transloading

Crude-by-Rail Terminal/Operator/Owner(s)	Estimated Capacity (bpd)	Estimated In-Service Date
BP Cherry Point/Blaine, WA	20,000	2013
Alon USA/Bakersfield, CA	65,000	2012
Tesoro/Anacortes, WA	50,000	2012
Ferndale, WA	40,000	2014
Blaine, WA	60,000	2014
Grays Harbor, WA	20,000	2014
Undisclosed, Bakersfield Area, CA	6,5000	2015
U.S. Development Group/Bakersfield, CA	65,000	2015
Global Partners/Clatskanie, OR	Not Reported	2012
Targa Sound Terminal/Port of Tacoma, WA	120,000	2014
Total	**385,000**	

Source: Hart 2012a; Company and Media Reports
bpd = barrels per day, BP = British Petroleum, CA = California, OR = Oregon, PADD = Petroleum Administration for Defense District, WA = Washington.

Table 14 Canadian Rail Loading Facilities

Southern Pacific Resource Corp, Lynton, AB
Torq Transloading, Whitecourt, AB
Connacher Oil and Gas Ltd., Bruderheim, AB
Gibson Energy, Hardisty, AB
Torq Transloading, Tilley, AB
Dollard, SK
Lloydminster, SK
Altex Energy Ltd., Lashburn, SK
Altex Energy Ltd., Unity, SK
Estevan, SK
Bromhead, SK
Torq Transloading, Tribune, SK
Tundra Energy, CN, Cromer, MB
Ceres Global Ag. Corp, Northgate, SK

Source: Hart 2012a; Hart 2012b; Company and Media Reports.
AB = Alberta, CN = Canadian National Railway, MB = Manitoba, PADD = Petroleum Administration for Defense District, SK = Saskatchewan.

8.0 ESTIMATED WCSB CRUDE OIL TRANSPORT CAPACITY

The Supplemental EIS includes an evaluation of whether rail transport by itself could accommodate the projected growth in WCSB crude oil production. This consisted of an assessment of rail capacity growth that would be required if the pipeline was not constructed due to denial or some other reason, and if no additional pipeline capacity was constructed beyond what currently exists. In this scenario, all WCSB crude oil would be transported by current pipeline capacity plus existing and future rail capacity.

The approach used in this analysis was to first calculate the total amounts of both heavy and light crude from the WCSB projected to be available for export through 2030. The analysis used CAPP 2012 projections for WCSB production, to which was added an additional amount of tight oil production above CAPP forecasts to account for a potential increased outlook for tight oil as indicated in the International Energy Agency's World Energy Outlook (WEO) 2012 and other sources. Crude oil volumes projected to be refined in the WCSB, and therefore not available for export, were then subtracted to yield estimates for net export volumes.

Second, WCSB pipeline export capacity was estimated using CAPP 2012 data, with the addition of the Milk River and Rangeland pipelines which were not included in CAPP 2012. Current pipeline export capacity for light and heavy oil was estimated by aggregating the combined effective capacities of the existing pipelines shown in Table 15. Effective capacities were assumed to be 90% of nameplate capacities to estimate actual shipped volumes (Table 15). In addition, available pipeline export capacity was reduced by 100,000 bpd to account for the estimated volume of refined product that these pipelines ship. Rail export capacity was estimated based on trends in growth of crude oil transport described in the Market Analysis. Two scenarios for annual rail capacity growth were considered: 175,000 bpd and 200,000 bpd. Both rail scenarios assume a 2013 capacity of 200,000 bpd.

Table 15 Estimated Existing Western Canada Pipeline Capacity[a]

	Name Plate Capacity		Effective Capacity[a]	
	Light (thousand bpd)	**Heavy (thousand bpd)**	**Light (thousand bpd)**	**Heavy (thousand bpd)**
Enbridge	1,081	1,246	973	1,121
Express	98	182	88	164
TransMountain	240	60	216	54
Keystone Mainline	148	443	133	399
Milk River/Rangeland	50	165	45	149
Total	1,617	2,096	1,455	1,886
Total Combined Light and Heavy	3,713		3,342	

Source: Canadian Association of Petroleum Producers (CAPP) 2012 (Milk/Rangeland capacities estimated from CAPP 2012 information about Western Canadian Sedimentary Basin [WCSB] export to Petroleum Administration for Defense District [PADD] 4).
[a] Adjustment factors of 90% were applied to nameplate capacities to account for effective transport capacities.
bpd = barrels per day.

Finally, surplus capacity was calculated by subtracting WCSB production from WCSB pipeline and rail export capacity for various scenarios, including existing pipeline only (without any rail transport), existing pipeline plus rail growing annually at 175,000 bpd, and existing pipeline with rail growing 200,000 bpd annually.

The results are shown in Table 16. Under the existing pipeline-only scenario, total transport capacity is insufficient to meet export needs by 2016 for heavy crude oil, and immediately for light crude oil (the pipeline systems have some flexibility in allocating how much heavy and light crude is transported). Under the pipeline with 175,000 bpd rail growth scenario, surplus capacity is exhausted by 2020 and continues through the end of the assessment period in 2030. However, assuming existing pipeline capacity and growth in the 200,000 bpd rail capacity, a net surplus in shipping capacity is maintained throughout the assessment period, with the exception of 2025 where an approximately 100,000 bpd capacity deficit is projected. If a slightly higher rail growth is assumed (210,000 bpd), a surplus is maintained throughout the entire assessment period. This growth rate would require ongoing expansion of loading and unloading facilities and increased production of railcars in line with current growth rates. By comparison, actual growth in rail transport capacity in the Bakken is estimated to average approximately 230,000 bpd over the 3 years from 2011 through 2013, and East Coast offloading facilities have grown from zero to approximately 900,000 bpd in 2 years, providing support that such growth is viable (see Supplemental EIS Section 1.4, Market Analysis).

This assessment does not include the localized bottlenecks that are occurring in the Cushing, Oklahoma, and Chicago, Illinois, areas due to insufficient pipeline capacity to transport crude oil out of PADD 2. As discussed in the Market Analysis section of the Supplemental EIS, projects such as the Gulf Coast pipeline and the Seaway pipeline reversal (not included in this assessment's pipeline capacity estimates) are completed or underway to alleviate this constraint.

Table 16 Estimated Western Canadian Sedimentary Basin Crude Oil Transport Capacity

	2013	2014	2015	2016	2017	2018	2019	2020	2021	2022	2023	2024	2025	2026	2027	2028	2029	2030
Total WCSB Crude Oil Production for Export (thousand bpd)																		
CAPP total heavy WCSB crude oil delivered to market	1,803	1,968	2,092	2,287	2,486	2,611	2,801	3,037	3,229	3,470	3,675	3,947	4,233	4,325	4,556	4,757	4,893	5,102
CAPP total light WCSB crude oil delivered to market	1,665	1,736	1,797	1,839	1,809	1,809	1,852	1,909	1,948	1,954	1,931	1,924	1,945	1,920	1,862	1,828	1,802	1,769
Tight oil production above CAPP forecasts[a]	200	200	200	250	300	300	350	400	400	400	400	400	400	400	350	350	350	300
Total processed West Canada refineries - heavy	220	250	270	260	260	260	260	260	260	260	260	260	260	260	260	260	260	260
Total processed West Canada refineries - light	350	350	350	360	360	360	370	370	370	370	370	370	370	370	370	370	370	370
Total WCSB heavy crude to export	1,583	1,718	1,822	2,027	2,226	2,351	2,541	2,777	2,969	3,210	3,415	3,687	3,973	4,065	4,296	4,497	4,633	4,842
Total WCSB light crude to export	1,515	1,586	1,647	1,729	1,749	1,749	1,832	1,939	1,978	1,984	1,961	1,954	1,975	1,950	1,842	1,808	1,782	1,699
Total WCSB Crude Oil Export Capacity (thousand bpd)																		
CAPP 2012 heavy pipeline capacity + Milk River/Rangeland	1,890	1,890	1,890	1,890	1,890	1,890	1,890	1,890	1,890	1,890	1,890	1,890	1,890	1,890	1,890	1,890	1,890	1,890
CAPP 2012 light pipeline capacity + Milk River/Rangeland	1,455	1,455	1,455	1,455	1,455	1,455	1,455	1,455	1,455	1,455	1,455	1,455	1,455	1,455	1,455	1,455	1,455	1,455
Less pipeline capacity dedicated to refined product transport	(100)	(100)	(100)	(100)	(100)	(100)	(100)	(100)	(100)	(100)	(100)	(100)	(100)	(100)	(100)	(100)	(100)	(100)
Rail capacity with increase assumed to be 175,000 bpd each year	200	375	550	725	900	1,075	1,250	1,425	1,600	1,775	1,950	2,125	2,300	2,475	2,650	2,825	3,000	3,175
Rail capacity with increase assumed to be 200,000 bpd each year	200	400	600	800	1,000	1,200	1,400	1,600	1,800	2,000	2,200	2,400	2,600	2,800	3,000	3,200	3,400	3,600
Surplus Transport Capacity (thousand bpd)																		
Total surplus pipeline capacity (heavy)	307	172	68	(137)	(336)	(461)	(651)	(887)	(1,079)	(1,320)	(1,525)	(1,797)	(2,083)	(2,175)	(2,406)	(2,607)	(2,743)	(2,952)
Total surplus pipeline capacity (light)	(160)	(231)	(292)	(374)	(394)	(394)	(477)	(584)	(623)	(629)	(606)	(599)	(620)	(595)	(487)	(453)	(427)	(344)
Total surplus pipeline and rail capacity (rail at 175,000)	347	315	325	215	170	220	122	(46)	(102)	(174)	(181)	(271)	(404)	(294)	(243)	(235)	(170)	(120)
Total surplus pipeline and rail capacity (rail at 200,000)	347	340	375	290	270	345	272	129	98	51	69	4	(104)	31	107	140	230	305

Source: Pipeline capacities and Western Canadian refinery throughputs from CAPP 2012; projected production from CAPP 2012.
[a] An adjustment to the CAPP forecast to reflect the potential for higher production from tight oil formations as indicated by WEO.
bpd = barrels per day, CAPP = Canadian Association of Petroleum Producers, WCSB = Western Canadian Sedimentary Basin, WEO = World Energy Outlook.

-Page Intentionally Left Blank-

9.0 TRANSPORT COSTS FROM THE GULF COAST AREA TO ASIAN PORTS

Table 17 examines the costs of crude oil transport from the Gulf Coast area (Houston) to three main Asian ports. The information provided supplements the narrative provided in the Market Analysis related to costs for routes to Asian Markets.

Table 17 U.S. Gulf Crude Oil Exports, 2015 Outlook, VLCC and Suezmax[a]

	VLCC			Suezmax		
from	Houston	Houston	Houston	Houston	Houston	Houston
to	Dalian	Ningpo	Ulsan	Dalian	Ningpo	Ulsan
via	Cape/Cape	Cape/Cape	Cape/Cape	Panama	Panama	Panama
Cargo Size (MT)	280,000	280,000	280,000	130,000	130,000	130,000
Cargo Size (bbl)	1,904,000	1,904,000	1,904,000	884,000	884,000	884,000
Total Voyage Days	101	98	100	65	66	62
Freight Subtotal	$9,341,148	$8,941,148	$8,741,148	$5,945,852	$5,964,190	$5,678,829
Reverse Lightering	$800,000	$800,000	$800,000	$400,000	$400,000	$400,000
Total Freight	$10,141,148	$9,741,148	$9,541,148	$6,345,852	$6,364,190	$6,078,829
$/MT	$36.22	$34.79	$34.08	$48.81	$48.96	$46.76
$/bbl	$5.33	$5.12	$5.01	$7.18	$7.20	$6.88

Source: Poten and Partners 2013.
[a]Suezmax is a naval architecture term for the largest ship measurements capable of transiting the Suez Canal in a laden condition.
bbl = barrels, MT = metric tons, VLCC = very large crude carrier.

10.0 REFERENCES

Bloomberg. 2012. Energy and Oil Prices: Natural Gas, Gasoline and Crude Oil. Website: http://www.bloomberg.com/energy/. Accessed November 14, 2012.

Borenstein & Kellogg. 2012. The Incidence of an Oil Glut: Who Benefits from Cheap Crude Oil in the Midwest? Energy Institute at HAAS Working Paper Series. May 2012.

Canadian Association of Petroleum Producers (CAPP). 2011. Crude Oil Forecast, Markets, and Pipelines. June 2011.

_____. 2012. Crude Oil Forecast, Markets, and Pipelines. June 2012.

CAPP. See Canadian Association of Petroleum Producers.

EIA. See U.S. Energy Information Administration.

EnSys Energy & Systems, Inc. 2010. Keystone XL Assessment. 1775 Massachusetts Avenue, Lexington MA. December 23, 2010.

Hart Energy Research Group. 2012a. Refining Unconventional Oil: U.S. Resources Reinvigorate Mature Industry. Hart Energy Research Group. Houston, TX. 187 pp.

_____. 2012b. Heavy Crude Oil: A Global Analysis and Outlook to 2035. Hart Energy Research Group. Houston, TX. 265 pp.

Hellerworx Inc. 2013. Impact of Pipeline Commitment Period on Tariffs: Selected Examples. Email communication: Tariff Comparison. Tom O'Connor, ICF International, to K. Benes and D. Blaha. January 17, 2013.

IEA. See International Energy Agency.

IHS CERA. 2011. The Role of the Canadian Oil Sands in the U.S. Market Energy Security, Changing Supply Trends, and the Keystone XL Pipeline. June 5, 2011.

International Energy Agency (IEA). 2012. World Energy Outlook. November 12, 2012.

Platts. 2012. New Crudes, New Markets. Special Report. Price Group/Oil Division. October 2012.

Poten and Partners. 2013. Email Communication: Evaluation Deliverable. Tom O'Connor to D. Blaha. January 4, 2013.

Reuters. 2012. Sweet Crude Imports to U.S. Gulf Coast Falling-Valero CEO. Website: http://af.reuters.com/article/energyOilNews/idAFL2E8EDBZV20120313. Accessed October 1, 2012

Seaway Crude Pipeline Company LLC. 2012. Local Tariff Containing Rates, Rules and Regulations Governing the Transportation of Crude Petroleum by Pipeline. FERC No. 2.0.0. Effective May 14, 2012. Website: http://www.enterpriseproducts.com/wsaext/PreloadedData/TariffAttachments/34b52f7f-eca5-43a9-832c-efbf49f09005.pdf. Accessed January 2013.

TransCanada Keystone Pipeline, LP. 2012a. Keystone Pipeline System Petroleum Toll Schedule. NEB Tariff No. 8. Effective: January 1, 2013. Website: http://www.transcanada.com/docs/Key_Projects/TransCanada-Keystone-NEB-No.8.pdf. Accessed January 2013.

_____. 2012b. Local Pipeline Tariff. FERC No. 6.6.0. Effective: January 1, 2013. Website: http://www.transcanada.com/docs/Key_Projects/TransCanada-Keystone-FERC-No.-6.6.0.pdf. Accessed January 2013.

U.S. Energy Information Administration (EIA). 2010. Annual Energy Outlook 2010 with Projections to 2035. DOE/EIA-0383(2010).

_____. 2012a. Annual Energy Outlook 2012 with Projections to 2035. DOE/EIA-0383(2012). June 2012.

_____. 2012b. This Week in Petroleum – Summary: The Impact of U.S. Crude Oil Production on Gulf Coast Crude Imports. September 26. Website: http://www.eia.gov/oog/info/twip/twiparch/120926/twipprint.html. Accessed November 14, 2012.

_____. 2013. Annual Energy Outlook Early Release Overview. DOE/EIA-0383ER(2013).

WEO. See International Energy Agency (IEA).

ATTACHMENT

Department of State Memo: The North American Oil Market Outlook, January 4, 2013

-Page Intentionally Left Blank-

Department of Energy

Washington, DC 20585
January 4, 2013

MEMORANDUM FOR: DAVID SANDALOW
ASSISTANT SECRETARY FOR POLICY AND INTERNATIONAL AFFAIRS

FROM: ADAM E. SIEMINSKI
ADMINISTRATOR
U.S. ENERGY INFORMATION ADMINISTRATION

SUBJECT: THE NORTH AMERICAN OIL MARKET OUTLOOK

This memorandum responds to your request for an overview of the latest U.S. Energy Information Administration's (EIA) outlook for North American oil markets through 2025 and changes in the outlook over the past several years. The requested information is provided below, reflecting comparisons of projections in the *Annual Energy Outlook 2013* (AEO2013) Reference case issued in December 2012 to those in prior AEO editions.

The AEO2013 Reference case reflects some important updates, including more rapid near-term growth in U.S. tight oil production, a lower near-term trajectory for oil prices, and reduced U.S. gasoline demand due to higher vehicle efficiency. However, these updates do not alter some of the major implications of earlier projections, including continued U.S. dependence on imported crude oil supplies, growing global demand, long-term rising oil prices, growth in Canadian oil sands production, and continued demand for heavy crude by U.S. Gulf Coast refiners even as traditional sources from Mexico and Venezuela continue their recent declines. Key observations regarding demand and supply are summarized below.

Demand:

- The AEO2013 global demand projection is 105.3 million barrels per day in 2025, 3.7% higher than the AEO2012 projection and 1.6% above the AEO2011 projection. Nearly all of the growth in global liquids demand in of these AEO editions is attributable to non-OECD Asia and the Middle East.
- The AEO2013 U.S. demand projection is 19.5 million barrels per day for 2025, 1.6% higher than the AEO2012 projection and 7.1% below the AEO2011 projection. The increase in AEO2013 relative to AEO2012 largely reflects a rise in energy-intensive manufacturing which raises petroleum use in the form of natural gas liquids and diesel fuel for trucks even as projected gasoline use is reduced by new fuel economy standards.

Supply, Imports, and Refining:

- AEO2013 projects U.S. crude oil production of 7.5 million barrels per day in 2019, 13% above the AEO2012 projection. However, tight oil production declines after 2020 as development moves into lower-productivity areas, and the AEO2013 projection for U.S. crude production beyond 2025 is similar to that in AEO2012. AEO2011 has a somewhat lower production profile than either AEO2013 or AEO2012.
- In AEO2013, as in AEO2012 and AEO2011, the United States remains a significant net importer of petroleum in 2025 and beyond, with about one-third of U.S. demand satisfied by imports in 2025.
- In AEO2013, as in AEO2012 and AEO2011, growth in Canadian oil sands remains a key factor in maintaining robust non-OPEC supply over the course of the next several decades. Projected levels of total Canadian production in 2025 are in a narrow band from 5.3 and 5.6 million barrels per day across these three AEOs.
- AEO2013, AEO2012, and AEO2011 projections for Mexico's oil production in 2025 are very similar, falling into a range of 1.3 to 1.6 million barrels per day. Projected 2025 production in all three AEO editions is below the current level.
- With U.S. Gulf Coast refineries optimized for the use of heavy/sour crude oil, the regional demand for heavier grades of oil in the U.S. Gulf Coast remains strong through 2025. Continuing recent trends, heavy oil supplies from Mexico and Venezuela continue to decline.

Printed with soy ink on recycled paper

Background
The *Annual Energy Outlook 2013* (AEO2013) Reference case published in December 2012 presents long-term projections of energy supply, demand, and prices through 2040 based on results from EIA's National Energy Modeling System. The complete AEO2013 to be released in the spring of 2013 will include a full range of cases exploring key uncertainties in the Reference case.

Oil Demand
The increase in EIA's Reference case projection for 2025 global oil demand between AEO2012 and AEO2013 is attributable to a more robust economic growth outlook for developing nations outside the Organization for Economic Cooperation and Development (OECD) and somewhat lower projections for oil prices over the next decade. The difference in global demand attenuates by 2035 (110.3 million barrels per day in AEO2013 against 109.5 million barrels per day in AEO2012) but in both cases EIA sees continuing growth in long-term world liquid fuels consumption despite rising world oil prices. Nearly all of the global increase in total liquids consumption is projected for the nations of non-OECD Asia and the Middle East, where strong economic growth and, in the case of the Middle East, access to ample and relatively inexpensive domestic resources, drive the increase in demand.

AEO2013 incorporates the new efficiency standards for light-duty vehicles in the United States through the 2025 model year, which reduces gasoline use in the transportation sector by 0.5 million barrels per day in 2025 and by 1.0 million barrels per day in 2035 in AEO2013 compared to the AEO2012 Reference case. As noted above, a rise in energy-intensive manufacturing that raises petroleum use in the form of natural gas liquids and diesel fuel for trucks has opposing effects on the demand for petroleum products. Overall U.S. petroleum product demand is relatively flat over the next 25 years in both the AEO2013 and AEO2012 projections.

Oil Supply
U.S. production of crude oil in the AEO2013 reference case increases from 5.7 million barrels per day in 2011 to 7.5 million barrels per day in 2019, 13% higher than in AEO2012. Despite a decline after 2019, U.S. crude oil production remains above 6.0 million barrels per day through 2040. Higher volumes from increased onshore oil production come predominantly from tight (very low permeability) formations. In AEO2013, onshore tight oil production accounts for 51% of total lower 48 states onshore oil production in 2040, up from 33% in 2011. Offshore crude oil production trends upward over time, fluctuating between 1.4 and 1.8 million barrels per day, as the pace of development quickens and new large development projects, predominantly in the deep and ultra-deep portions of the Gulf of Mexico, are brought into production.

The faster growth of tight oil production through 2020 in AEO2013 results in higher domestic crude oil production than forecast in AEO2012 throughout most of the projection. Tight oil production declines after 2020 as more development moves into lower-productivity areas (with lower initial production rates and flatter decline curves), resulting in flattening of production after 2030. Total U.S. liquids production in AEO2013 is higher than in AEO2012 due to increased tight oil production through 2025; however, lower production of biofuels and natural gas plant liquids, as well as the decline in tight oil production beginning in 2021, results in lower levels of total domestic liquids production after 2025 in AEO2013 than in AEO2012.

EIA's AEO2013 Reference case projects the Organization of the Petroleum Exporting Countries' (OPEC) share of total global supply to increase from 40.0% in 2011 to 44.2% in 2040. The AEO2012 estimated OPEC's share at 41.3% in 2025, while the AEO2013 pushes OPEC's share higher to 42.2% in 2025. Thus, recent optimism regarding U.S. production prospects does not challenge OPEC's role, or mitigate the robustness of market pressures to increase all sources of non-OPEC supply. A number of non-OECD producers, including Russia and

other countries within the former Soviet Union, as well as Brazil, China, and a host of small African producers, are expected to see their combined share of total supply fall by an amount roughly equal to the OPEC increase between 2011 and 2040.

U.S. Imports

In both the AEO2012 and 2013, the United States remains a significant net importer of petroleum in 2025 and beyond, with about one-third of U.S. demand satisfied by net imports. In the AEO2013 reference case, U.S. net imports of liquids in 2025 are projected at 7.1 million barrels per day, the same level as in AEO2012, but 2.1 million barrels per day lower than had been projected in AEO2011. U.S. dependence on net imports of liquid fuels declines in the AEO2013 Reference case, primarily as a result of increased domestic oil production. Net liquid fuels imports as a share of total U.S. liquid fuel use exceeded 60% in 2005 before dipping below 50% in 2010 and falling further to 45% in 2011. The projected net import share in the AEO2013 Reference case bottoms at 34% in 2019 and then rises to about 37% in 2040, due to a decline in domestic production of tight oil that begins in about 2021. Differences between the AEO2013 and AEO2012 forecasts for U.S. net dependence on oil imports in 2025 and beyond are relatively minor.

U.S. Gulf Coast Refining

Many U.S. refineries are located close to crude oil production centers such as the Gulf Coast or near major population centers where much of the demand for petroleum products is concentrated (e.g., California and the areas near Philadelphia, New York City, and Chicago). Of the more than 17.5 million barrels per day of U.S. refinery capacity in 2012, about 44% is located along the Gulf Coast. Many Gulf Coast refineries have extensive secondary conversion capacity including hydrocrackers, cokers, and desulfurization units that enable the processing of heavy, high sulfur (sour) crude oils. Most East Coast refineries have less secondary conversion capacity, and, in general, they process crude oil with lower sulfur content and a lighter density (light sweet oil).

In recent years, oil production has risen dramatically in both the United States (light sweet crude, especially from the Bakken and Eagle Ford formations) and Canada (heavy sour grades from the Alberta oil sands). Although light sweet grades traditionally sell at a premium to heavy sour grades, inland light sweet oil that is subject to transportation bottlenecks has been heavily discounted in recent years. Refineries across the country are developing strategies to acquire and transport inland light sweet crude streams to replace more expensive imports of high-quality crude oil. At the same time, many Gulf Coast refiners are also seeking more access to Canadian oil to replace declining supplies of heavy crude from Mexico and Venezuela. As currently configured, many such refiners would experience lower utilization rates and produce less desirable product slates if they were to run light sweet crude, which also still sells at a premium to heavy grades in coastal locations.

AEO2013, AEO2012, and AEO2011 all project continued strong demand for heavy sour crudes from Gulf Coast refiners that are optimized to process such oil. While the AEO does not identify specific supply sources for the imported crude used by U.S. refiners, Canada is certainly a likely source for heavy grades. Importantly, the projection for rising Canadian oil sands production in the Reference case of all recent AEO editions is not predicated on the completion of any particular infrastructure project. Increased rail transport utilizing infrastructure that is already in place, appears to be a viable option for moving production over long distances to reach the Gulf Coast and other markets, as evidenced by the extremely rapid growth in the volume of rail shipments of domestic Bakken crude to a variety of markets over the past year. While rail shipment is somewhat more costly than pipeline shipment, the Bakken experience suggests that the absence of pipeline take away capacity will not forestall profitable production projects.

Reference Case Liquids Projections for 2025
Comparison of Recent Annual Energy Outlook Editions

	AEO2010	AEO2011	AEO2012	AEO2013
Total World Liquids Consumption (mmb/d)	100.7	97.1	101.5	105.3
OPEC Market Share (%)	41.6%	42.0%	41.3%	42.2%
U.S. Crude Oil Production (mmb/d)	6.1	5.9	6.4	6.8
Lower 48	5.4	5.5	6.0	6.4
Lower 48 Onshore	3.2	3.9	4.4	5.0
Lower 48 Offshore	2.1	1.6	1.6	1.5
Alaska	0.7	0.4	0.4	0.4
Other Petroleum and Non-Petroleum Supply excluding net imports (mmb/d)	4.9	5.8	5.8	5.6
U.S. Liquids Demand (mmb/d)	21.0	21.0	19.2	19.5
U.S. Net Liquids Imports (mmb/d)	9.8	9.2	7.1	7.1
U.S. Net Import Share of Demand (%)	47.1%	44.0%	37.0%	36.3%
Canada Oil Production (mmb/d)	5.1	5.3	5.5	5.6
Mexico Oil Production (mmb/d)	1.9	1.3	1.6	1.6

Source: U.S. Energy Information Administration

APPENDIX D

Waterbody Crossing Tables

Required Crossing Criteria for Reclamation Facilities

Waterbody Crossing Tables

Table 1	Waterbodies Crossed by the Project in Montana
Table 2	Waterbodies Crossed by the Project in Nebraska
Table 3	Waterbodies Crossed by the Project in South Dakota
Table 4	Impaired Waterbodies Crossed by the Project in Montana
Table 5	Impaired Waterbodies Crossed by the Project in Nebraska
Table 6	Impaired Waterbodies Crossed by the Project in South Dakota
Table 7	Waterbodies within 10 mi Downstream of Water Crossing in MT
Table 8	Waterbodies within 10 mi Downstream of Water Crossing in NE
Table 7	Waterbodies within 10 mi Downstream of Water Crossing in SD
Table 10	Montana Wetlands along Project Route by Milepost
Table 11	Nebraska Wetlands along Project Route by Milepost
Table 12	South Dakota Wetlands along Project Route by Milepost

Table 1 Waterbodies Crossed by the Project in Montana

County	Approximate Milepost	Waterbody Name [a]	Waterbody Type [b]	Use Class Description [c]	Use Attainment Assessment [d,e,f] AqL	AG	DW	Rec	Source of Information [b]
Phillips	1.11	Unnamed Tributary to East Fork Whitewater Creek	Lake/Pond						ERM Desktop
Phillips	1.37	Unnamed Tributary to East Fork Whitewater Creek	Intermittent						ERM Desktop
Phillips	1.69	Unnamed Tributary to East Fork Whitewater Creek	Intermittent						ERM Desktop
Phillips	2.30	Unnamed Tributary to East Fork Whitewater Creek	Intermittent						Keystone Desktop
Phillips	2.47	Unnamed Tributary to East Fork Whitewater Creek	Intermittent						ERM Desktop
Phillips	2.81	Unnamed Tributary to East Fork Whitewater Creek	Intermittent						ERM Desktop
Phillips	4.61	Unnamed Tributary to East Fork Whitewater Creek	Intermittent						ERM Desktop
Phillips	5.31	Unnamed Tributary to East Fork Whitewater Creek	Intermittent						ERM Desktop
Phillips	5.45	Unnamed Tributary to East Fork Whitewater Creek	Intermittent						ERM Desktop
Phillips	5.94	Unnamed Tributary to Dunham Coulee	Intermittent						Keystone Desktop
Phillips	6.51	Unnamed Tributary to East Fork Whitewater Creek	Intermittent						ERM Desktop
Phillips	8.18	Unnamed Tributary to East Fork Whitewater Creek	Intermittent						ERM Desktop
Phillips	8.46	Unnamed Tributary to East Fork Whitewater Creek	Intermittent						ERM Desktop
Phillips	9.05	Unnamed Tributary to East Fork Whitewater Creek	Intermittent						ERM Desktop
Phillips	9.12	Unnamed Tributary to East Fork Whitewater Creek	Lake/Pond						ERM Desktop
Phillips	9.59	Unnamed Tributary to East Fork Whitewater Creek	Intermittent						ERM Desktop
Phillips	10.37	Unnamed Tributary to East Fork Whitewater Creek	Intermittent						ERM Desktop
Phillips	10.72	Unnamed Tributary to East Fork Whitewater Creek	Intermittent						ERM Desktop
Phillips	11.26	East Fork Whitewater Creek	Intermittent						ERM Desktop
Phillips	11.67	Unnamed Tributary to Cottonwood Creek	Intermittent						ERM Desktop
Phillips	11.87	Unnamed Tributary to Cottonwood Creek	Intermittent						Keystone Desktop
Phillips	12.00	Unnamed Tributary to Cottonwood Creek	Intermittent						Keystone Desktop
Phillips	13.75	Unnamed Tributary to Cottonwood Creek	Intermittent						Keystone Desktop
Phillips	13.82	Unnamed Tributary to Cottonwood Creek	Intermittent						Keystone Desktop
Phillips	14.01	Unnamed Tributary to Cottonwood Creek	Intermittent						Keystone Desktop
Phillips	14.25	Unnamed Tributary to Cottonwood Creek	Intermittent						ERM Desktop
Phillips	14.64	Unnamed Tributary to Cottonwood Creek	Lake/Pond						ERM Desktop
Phillips	15.00	Unnamed Tributary to Cottonwood Creek	Intermittent						ERM Desktop
Phillips	15.17	Unnamed Tributary to Cottonwood Creek	Intermittent						ERM Desktop
Phillips	15.68	Unnamed Tributary to Cottonwood Creek	Intermittent						ERM Desktop
Phillips	16.42	Unnamed Tributary to Cottonwood Creek	Intermittent						ERM Desktop
Phillips	16.96	Unnamed Tributary to Cottonwood Creek	Intermittent						ERM Desktop
Phillips	17.89	Unnamed Tributary to Frenchman River	Intermittent						ERM Desktop
Phillips	17.92	Unnamed Tributary to Frenchman River	Intermittent						ERM Desktop
Phillips	18.09	Unnamed Tributary to Frenchman River	Intermittent						ERM Desktop
Phillips	18.35	Unnamed Tributary to Frenchman River	Intermittent						ERM Desktop
Phillips	18.41	Unnamed Tributary to Corral Coulee	Intermittent						Keystone Desktop
Phillips	18.98	Unnamed Tributary to Frenchman River	Intermittent						ERM Desktop
Phillips	19.18	Unnamed Tributary to Frenchman River	Intermittent						ERM Desktop
Phillips	22.15	Unnamed Tributary to Frenchman River	Intermittent						ERM Desktop
Phillips	22.32	Unnamed Tributary to Frenchman River	Intermittent						ERM Desktop
Phillips	22.70	Unnamed Tributary to Frenchman River	Intermittent						ERM Desktop
Phillips	22.74	Unnamed Tributary to Corral Coulee	Man Made Ditch						Keystone Desktop
Phillips	23.70	Unnamed Tributary to Frenchman River	Intermittent						ERM Desktop
Phillips	23.81	Corral Coulee	Intermittent						Keystone Desktop
Phillips	24.93	Unnamed Tributary to Frenchman River	Intermittent						ERM Desktop
Phillips	25.28	Frenchman River	Perennial	Drinking Water; Recreation; Warm Water Non-Salmonid Fishes and associated Aquatic Life; Agricultural/Industrial	P	P	F	P	

Table 1 Waterbodies Crossed by the Project in Montana

County	Approximate Milepost	Waterbody Name [a]	Waterbody Type [b]	Use Class Description [c]	Use Attainment Assessment [d,e,f] AqL	AG	DW	Rec	Source of Information [b]
Valley	25.56	Unnamed Tributary to Frenchman River	Intermittent						ERM Desktop
Valley	26.04	Unnamed Tributary to Frenchman River	Intermittent						ERM Desktop
Valley	26.80	Unnamed Tributary to Frenchman River	Intermittent						ERM Desktop
Valley	26.92	Unnamed Tributary to Frenchman River	Intermittent						ERM Desktop
Valley	27.02	Unnamed Tributary to Frenchman River	Intermittent						ERM Desktop
Valley	28.66	Unnamed Tributary to Frenchman River	Intermittent						ERM Desktop
Valley	29.56	Unnamed Tributary to Jack Creek	Intermittent						ERM Desktop
Valley	30.31	Unnamed Tributary to Jack Creek	Intermittent						Keystone Desktop
Valley	32.26	Unnamed Tributary to East Fork Cash Creek	Intermittent						ERM Desktop
Valley	32.32	East Fork Cash Creek	Intermittent						ERM Desktop
Valley	32.49	Unnamed Tributary to East Fork Cash Creek	Intermittent						ERM Desktop
Valley	33.01	Unnamed Tributary to Papoose Creek	Intermittent						ERM Desktop
Valley	33.08	Unnamed Tributary to Papoose Creek	Intermittent						ERM Desktop
Valley	33.68	Unnamed Tributary to Papoose Creek	Intermittent						ERM Desktop
Valley	34.55	Unnamed Tributary to Rock Creek	Intermittent						ERM Desktop
Valley	34.87	Unnamed Tributary to Rock Creek	Intermittent						Keystone Desktop
Valley	35.19	Unnamed Tributary to Rock Creek	Intermittent						ERM Desktop
Valley	35.39	Unnamed Tributary to Rock Creek	Intermittent						ERM Desktop
Valley	35.99	Unnamed Tributary to Jones Coulee	Intermittent						Keystone Unknown
Valley	37.83	Unnamed Tributary to Papoose Creek	Intermittent						Keystone Desktop
Valley	38.96	Unnamed Tributary to Rock Creek	Man Made Ditch						Keystone Unknown
Valley	39.03	Rock Creek	Perennial	Non-Salmonid	nd	nd	nd	nd	Keystone Survey
Valley	40.24	Unnamed Tributary to Willow Creek	Intermittent						ERM Desktop
Valley	40.40	Willow Creek	Perennial	Non-Salmonid	nd	nd	nd	nd	Keystone Desktop
Valley	40.72	Unnamed Tributary to Willow Creek	Intermittent						ERM Desktop
Valley	40.78	Unnamed Tributary to Willow Creek	Intermittent						Keystone Desktop
Valley	40.92	Unnamed Tributary to Willow Creek	Intermittent						ERM Desktop
Valley	41.19	Unnamed Tributary to Willow Creek	Intermittent						ERM Desktop
Valley	41.30	Unnamed Tributary to Willow Creek	Intermittent						ERM Desktop
Valley	41.57	Unnamed Tributary to Willow Creek	Intermittent						ERM Desktop
Valley	42.41	Unnamed Tributary to Willow Creek	Intermittent						ERM Desktop
Valley	43.25	Unnamed Tributary to Lime Creek	Intermittent						ERM Desktop
Valley	43.67	Unnamed Tributary to Lime Creek	Intermittent						ERM Desktop
Valley	44.11	Unnamed Tributary to Lime Creek	Intermittent						Keystone Survey
Valley	44.21	Unnamed Tributary to Lime Creek	Intermittent						ERM Desktop
Valley	44.44	Unnamed Tributary to Lime Creek	Intermittent						Keystone Desktop
Valley	45.00	Lime Creek	Intermittent						Keystone Survey
Valley	47.18	Unnamed Tributary to Lime Creek	Intermittent						ERM Desktop
Valley	47.81	Unnamed Tributary to Bear Creek	Intermittent						ERM Desktop
Valley	47.90	Unnamed Tributary to Black Coulee	Intermittent						Keystone Unknown
Valley	48.14	Unnamed Tributary to Black Coulee	Intermittent						Keystone Desktop
Valley	48.20	Unnamed Tributary to Black Coulee	Intermittent						Keystone Desktop
Valley	49.14	Unnamed Tributary to Bear Creek	Intermittent						ERM Desktop
Valley	49.39	Unnamed Tributary to Bear Creek	Intermittent						ERM Desktop
Valley	49.62	Unnamed Tributary to Bear Creek	Intermittent						ERM Desktop
Valley	49.71	Unnamed Tributary to Bear Creek	Intermittent						ERM Desktop
Valley	49.71	Unnamed Tributary to Bear Creek	Intermittent						ERM Desktop
Valley	49.74	Unnamed Tributary to Bear Creek	Intermittent						ERM Desktop
Valley	49.77	Unnamed Tributary to Bear Creek	Intermittent						ERM Desktop

Table 1 Waterbodies Crossed by the Project in Montana

County	Approximate Milepost	Waterbody Name [a]	Waterbody Type [b]	Use Class Description [c]	Use Attainment Assessment [d,e,f] AqL	AG	DW	Rec	Source of Information [b]
Valley	49.81	Unnamed Tributary to Bear Creek	Intermittent						Keystone Desktop
Valley	51.18	Brush Fork	Intermittent						Keystone Survey
Valley	51.29	Unnamed Tributary to Brush Fork	Intermittent						ERM Desktop
Valley	51.31	Unnamed Tributary to Brush Fork	Intermittent						Keystone Desktop
Valley	51.40	Unnamed Tributary to Brush Fork	Intermittent						Keystone Desktop
Valley	51.48	Unnamed Tributary to Brush Fork	Intermittent						Keystone Desktop
Valley	52.36	Bear Creek	Intermittent						ERM Desktop
Valley	52.46	Unnamed Tributary to Bear Creek	Intermittent						Keystone Desktop
Valley	53.38	Unnamed Tributary to Buggy Creek	Intermittent						Keystone Survey
Valley	54.02	Unnamed Tributary to Buggy Creek	Intermittent						ERM Desktop
Valley	55.10	Unnamed Tributary to Buggy Creek	Intermittent						Keystone Desktop
Valley	55.34	Buggy Creek	Intermittent	Drinking Water; Recreation; Warm Water Non-Salmonid Fishes and associated Aquatic Life; Agricultural/Industrial	P	F	F	F	ERM Desktop
Valley	55.55	Unnamed Tributary to Buggy Creek	Intermittent						ERM Desktop
Valley	56.00	Unnamed Tributary to Buggy Creek	Intermittent						Keystone Desktop
Valley	56.15	Unnamed Tributary to Buggy Creek	Intermittent						Keystone Desktop
Valley	56.29	Unnamed Tributary to Buggy Creek	Intermittent						Keystone Desktop
Valley	56.33	Unnamed Tributary to Buggy Creek	Intermittent						Keystone Desktop
Valley	56.60	Unnamed Tributary to Buggy Creek	Intermittent						ERM Desktop
Valley	57.03	Unnamed Tributary to Spring Creek	Intermittent						ERM Desktop
Valley	57.12	Unnamed Tributary to Alkali Coulee	Intermittent						Keystone Desktop
Valley	57.16	Unnamed Tributary to Spring Creek	Intermittent						ERM Desktop
Valley	57.59	Unnamed Tributary to Spring Creek	Intermittent						Keystone Desktop
Valley	57.63	Unnamed Tributary to Alkali Coulee	Intermittent						Keystone Desktop
Valley	57.79	Unnamed Tributary to Spring Creek	Intermittent						ERM Desktop
Valley	58.02	Unnamed Tributary to Spring Creek	Intermittent						ERM Desktop
Valley	58.42	Unnamed Tributary to Spring Creek	Intermittent						ERM Desktop
Valley	58.84	Unnamed Tributary to Spring Creek	Intermittent						ERM Desktop
Valley	59.38	Unnamed Tributary to Spring Creek	Intermittent						ERM Desktop
Valley	59.43	Unnamed Tributary to Wire Grass Coulee	Intermittent						Keystone Desktop
Valley	59.90	Spring Creek	Intermittent						Keystone Survey
Valley	61.75	Unnamed Tributary to Milk River	Intermittent						ERM Desktop
Valley	62.78	Unnamed Tributary to Milk River	Intermittent						ERM Desktop
Valley	63.05	Unnamed Tributary to Milk River	Intermittent						ERM Desktop
Valley	64.41	Unnamed Tributary to Cherry Creek	Intermittent						ERM Desktop
Valley	65.51	Unnamed Tributary to Cherry Creek	Intermittent						ERM Desktop
Valley	65.78	Unnamed Tributary to Cherry Creek	Intermittent						ERM Desktop
Valley	66.01	Cherry Creek	Intermittent	Drinking Water; Recreation; Warm Water Non-Salmonid Fishes and associated Aquatic Life; Agricultural/Industrial	F	F	F	F	ERM Desktop
Valley	67.11	Unnamed Tributary to East Fork Cherry Creek	Intermittent						ERM Desktop
Valley	67.85	Unnamed Tributary to East Fork Cherry Creek	Intermittent						ERM Desktop
Valley	67.89	Unnamed Tributary to East Fork Cherry Creek	Intermittent						ERM Desktop
Valley	67.91	Unnamed Tributary to East Fork Cherry Creek	Intermittent						ERM Desktop
Valley	69.06	Unnamed Tributary to East Fork Cherry Creek	Intermittent						ERM Desktop
Valley	69.49	Unnamed Tributary to East Fork Cherry Creek	Intermittent						ERM Desktop
Valley	70.04	Unnamed Tributary to East Fork Cherry Creek	Intermittent						ERM Desktop
Valley	71.81	East Fork Cherry Creek	Intermittent						ERM Desktop
Valley	71.86	Unnamed Tributary to East Fork Cherry Creek	Intermittent						ERM Desktop
Valley	72.29	Unnamed Tributary to East Fork Cherry Creek	Intermittent						ERM Desktop

Table 1 Waterbodies Crossed by the Project in Montana

County	Approximate Milepost	Waterbody Name [a]	Waterbody Type [b]	Use Class Description [c]	Use Attainment Assessment [d,e,f] AqL	AG	DW	Rec	Source of Information [b]
Valley	73.66	Unnamed Tributary to Milk River	Intermittent						Keystone Desktop
Valley	75.22	Unnamed Tributary to Milk River	Intermittent						ERM Desktop
Valley	75.66	Unnamed Tributary to Milk River	Intermittent						ERM Desktop
Valley	76.55	Unnamed Tributary to Milk River	Intermittent						ERM Desktop
Valley	77.46	Unnamed Tributary to Milk River	Intermittent						ERM Desktop
Valley	78.58	Unnamed Tributary to Milk River	Intermittent						Keystone Desktop
Valley	78.82	Unnamed Tributary to Milk River	Intermittent						ERM Desktop
Valley	80.16	Unnamed Tributary to Milk River	Intermittent						ERM Desktop
Valley	83.41	Milk River	Perennial	Drinking Water; Recreation; Warm Water Non-Salmonid Fishes and associated Aquatic Life; Agricultural/Industrial	X	F	N	N	Keystone Survey
Valley	83.46	Ditch	Man Made Ditch						Keystone Survey
Valley	83.88	Canal Ditch	Man Made Ditch						Keystone Desktop
Valley	83.89	Canal Ditch	Man Made Ditch						Keystone Desktop
Valley	84.15	Canal Ditch	Man Made Ditch						Keystone Desktop
Valley	84.75	Canal Ditch	Man Made Ditch						Keystone Desktop
Valley	84.96	Unnamed Tributary to Milk River	Man Made Ditch						ERM Desktop
Valley	85.07	Canal Ditch	Man Made Ditch						Keystone Desktop
Valley	85.49	Canal Ditch	Man Made Ditch						Keystone Survey
Valley	87.71	Unnamed Tributary to Milk River	Intermittent						Keystone Desktop
Valley	88.36	Canal Ditch	Man Made Ditch						Keystone Desktop
Valley	88.55	Canal Ditch	Man Made Ditch						Keystone Desktop
Valley	88.57	Canal Ditch	Man Made Ditch						Keystone Desktop
Valley	88.81	Canal Ditch	Man Made Ditch						Keystone Desktop
Valley	88.84	Canal Ditch	Man Made Ditch						Keystone Desktop
Valley	89.10	Canal Ditch	Man Made Ditch						Keystone Desktop
Valley	89.30	Unnamed Tributary to Missouri River	Intermittent						Keystone Survey
Valley	89.31	Unnamed Tributary to Missouri River	Man Made Ditch						Keystone Desktop
Valley	89.42	Canal Ditch	Man Made Ditch						ERM Desktop
Valley	89.66	Missouri River	Perennial	Drinking Water; Recreation; Cold Water Salmonid Fishes and associated Aquatic Life; Agricultural/Industrial	P	F	F	F	Keystone Survey
McCone	93.48	Unnamed Tributary to Missouri River	Intermittent						ERM Desktop
McCone	94.02	Unnamed Tributary to West Fork Lost Creek	Intermittent						ERM Desktop
McCone	94.52	Unnamed Tributary to West Fork Lost Creek	Intermittent						ERM Desktop
McCone	94.68	West Fork Lost Creek	Intermittent						ERM Desktop
McCone	95.54	Unnamed Tributary to West Fork Lost Creek	Intermittent						ERM Desktop
McCone	95.77	Unnamed Tributary to West Fork Lost Creek	Intermittent						Keystone Survey
McCone	96.10	Unnamed Tributary to Jorgensen Coulee	Intermittent						Keystone Desktop
McCone	96.21	Unnamed Tributary to Jorgensen Coulee	Intermittent						Keystone Desktop
McCone	96.34	Unnamed Tributary to West Fork Lost Creek	Intermittent						ERM Desktop
McCone	97.21	Unnamed Tributary to Lost Creek	Intermittent						ERM Desktop
McCone	97.54	Unnamed Tributary to Lost Creek	Intermittent						ERM Desktop
McCone	97.58	Unnamed Tributary to Lost Creek	Intermittent						ERM Desktop
McCone	97.97	Unnamed Tributary to Lost Creek	Intermittent						ERM Desktop
McCone	99.53	Unnamed Tributary to West Fork Hungry Creek	Intermittent						Keystone Desktop
McCone	99.57	Unnamed Tributary to West Fork Hungry Creek	Intermittent						ERM Desktop
McCone	100.04	West Fork Hungry Creek	Intermittent						ERM Desktop
McCone	100.51	Unnamed Tributary to West Fork Hungry Creek	Intermittent						ERM Desktop
McCone	101.52	Unnamed Tributary to Cheer Creek	Intermittent						Keystone Desktop
McCone	102.30	Cheer Creek	Intermittent						ERM Desktop

Table 1 Waterbodies Crossed by the Project in Montana

County	Approximate Milepost	Waterbody Name [a]	Waterbody Type [b]	Use Class Description [c]	Use Attainment Assessment [d,e,f]				Source of Information [b]
					AqL	AG	DW	Rec	
McCone	102.35	Unnamed Tributary to Cheer Creek	Intermittent						Keystone Survey
McCone	102.93	Unnamed Tributary to Bear Creek	Intermittent						Keystone Desktop
McCone	103.38	Unnamed Tributary to Bear Creek	Intermittent						ERM Desktop
McCone	103.44	Unnamed Tributary to Bear Creek	Intermittent						ERM Desktop
McCone	103.83	Unnamed Tributary to Bear Creek	Intermittent						Keystone Desktop
McCone	106.26	Bear Creek	Intermittent						ERM Desktop
McCone	106.54	Unnamed Tributary to Bear Creek	Intermittent						ERM Desktop
McCone	106.96	Bear Creek	Intermittent						Keystone Desktop
McCone	107.60	Unnamed Tributary to North Prong Shade Creek	Intermittent						ERM Desktop
McCone	108.24	Unnamed Tributary to North Prong Shade Creek	Intermittent						Keystone Desktop
McCone	108.46	Unnamed Tributary to North Prong Shade Creek	Intermittent						ERM Desktop
McCone	108.85	Unnamed Tributary to North Prong Shade Creek	Intermittent						ERM Desktop
McCone	109.25	North Prong Shade Creek	Intermittent						ERM Desktop
McCone	109.91	Unnamed Tributary to North Prong Shade Creek	Intermittent						ERM Desktop
McCone	110.04	Unnamed Tributary to North Prong Shade Creek	Intermittent						ERM Desktop
McCone	111.44	Shade Creek	Intermittent						Keystone Survey
McCone	111.49	Unnamed Tributary to Shade Creek	Intermittent						ERM Desktop
McCone	111.52	Unnamed Tributary to Shade Creek	Intermittent						ERM Desktop
McCone	111.61	Unnamed Tributary to Shade Creek	Intermittent						ERM Desktop
McCone	112.08	Unnamed Tributary to Shade Creek	Intermittent						ERM Desktop
McCone	112.40	Unnamed Tributary to Shade Creek	Intermittent						ERM Desktop
McCone	112.41	Unnamed Tributary to Shade Creek	Intermittent						ERM Desktop
McCone	112.61	Unnamed Tributary to Shade Creek	Intermittent						ERM Desktop
McCone	112.83	Unnamed Tributary to Shade Creek	Intermittent						ERM Desktop
McCone	113.09	Unnamed Tributary to Shade Creek	Intermittent						Keystone Desktop
McCone	113.13	Unnamed Tributary to Shade Creek	Intermittent						Keystone Desktop
McCone	114.75	Unnamed Tributary to South Fork Shade Creek	Intermittent						ERM Desktop
McCone	115.25	South Fork Shade Creek	Intermittent						Keystone Desktop
McCone	115.66	Unnamed Tributary to South Fork Shade Creek	Intermittent						ERM Desktop
McCone	115.88	Unnamed Tributary to South Fork Shade Creek	Intermittent						ERM Desktop
McCone	116.33	Unnamed Tributary to South Fork Shade Creek	Intermittent						ERM Desktop
McCone	116.50	Unnamed Tributary to South Fork Shade Creek	Intermittent						ERM Desktop
McCone	116.83	Unnamed Tributary to South Fork Shade Creek	Intermittent						ERM Desktop
McCone	117.21	Unnamed Tributary to South Fork Shade Creek	Intermittent						ERM Desktop
McCone	117.58	Unnamed Tributary to South Fork Shade Creek	Intermittent						ERM Desktop
McCone	118.21	Unnamed Tributary to Ruff Creek	Intermittent						ERM Desktop
McCone	119.62	Flying V Creek	Lake/Pond						ERM Desktop
McCone	119.84	Flying V Creek	Intermittent						Keystone Desktop
McCone	119.89	Flying V Creek	Intermittent						Keystone Desktop
McCone	119.94	Unnamed Tributary to Flying V Creek	Intermittent						ERM Desktop
McCone	120.43	Unnamed Tributary to Flying V Creek	Intermittent						ERM Desktop
McCone	120.56	Unnamed Tributary to Flying V Creek	Intermittent						ERM Desktop
McCone	121.25	Unnamed Tributary to Flying V Creek	Intermittent						ERM Desktop
McCone	121.42	Unnamed Tributary to Flying V Creek	Intermittent						ERM Desktop
McCone	121.53	Unnamed Tributary to Flying V Creek	Intermittent						ERM Desktop
McCone	122.07	Unnamed Tributary to Figure Eight Creek	Intermittent						Keystone Desktop
McCone	122.60	Unnamed Tributary to Figure Eight Creek	Intermittent						ERM Desktop
McCone	123.64	Figure Eight Creek	Intermittent						Keystone Survey

Table 1 Waterbodies Crossed by the Project in Montana

County	Approximate Milepost	Waterbody Name [a]	Waterbody Type [b]	Use Class Description [c]	Use Attainment Assessment [d,e,f]				Source of Information [b]
					AqL	AG	DW	Rec	
McCone	124.38	Middle Fork Prairie Elk Creek	Intermittent	Recreation; Warm Water Non-Salmonid Fishes and associated Aquatic Life; Agricultural/Industrial; Degradation Prohibited	P	nd	nd	X	ERM Desktop
McCone	124.44	Unnamed Tributary to Middle Fork Prairie Elk Creek	Intermittent						ERM Desktop
McCone	125.32	Unnamed Tributary to East Fork Prairie Elk Creek	Intermittent						ERM Desktop
McCone	125.80	Unnamed Tributary to East Fork Prairie Elk Creek	Intermittent						ERM Desktop
McCone	125.85	Unnamed Tributary to East Fork Prairie Elk Creek	Intermittent						ERM Desktop
McCone	125.95	Unnamed Tributary to East Fork Prairie Elk Creek	Intermittent						ERM Desktop
McCone	126.41	Unnamed Tributary to East Fork Prairie Elk Creek	Intermittent						ERM Desktop
McCone	126.93	Unnamed Tributary to East Fork Prairie Elk Creek	Intermittent						ERM Desktop
McCone	127.22	Unnamed Tributary to East Fork Prairie Elk Creek	Intermittent						ERM Desktop
McCone	127.47	Unnamed Tributary to East Fork Prairie Elk Creek	Intermittent						Keystone Desktop
McCone	128.03	Unnamed Tributary to East Fork Prairie Elk Creek	Intermittent						ERM Desktop
McCone	128.40	Unnamed Tributary to East Fork Prairie Elk Creek	Intermittent						ERM Desktop
McCone	128.95	East Fork Prairie Elk Creek	Intermittent	Recreation; Warm Water Non-Salmonid Fishes and associated Aquatic Life; Agricultural/Industrial; Degradation Prohibited	P	nd	nd	X	Keystone Survey
McCone	129.60	Unnamed Tributary to East Fork Prairie Elk Creek	Intermittent						ERM Desktop
McCone	129.69	Unnamed Tributary to East Fork Prairie Elk Creek	Intermittent						ERM Desktop
McCone	130.95	Unnamed Tributary to East Fork Prairie Elk Creek	Intermittent						ERM Desktop
McCone	131.58	Unnamed Tributary to East Fork Prairie Elk Creek	Intermittent						ERM Desktop
McCone	132.08	Unnamed Tributary to East Fork Prairie Elk Creek	Intermittent						ERM Desktop
McCone	132.13	Unnamed Tributary to East Fork Prairie Elk Creek	Intermittent						ERM Desktop
McCone	132.32	Unnamed Tributary to East Fork Prairie Elk Creek	Intermittent						ERM Desktop
McCone	132.67	Unnamed Tributary to East Fork Prairie Elk Creek	Intermittent						ERM Desktop
McCone	134.09	Unnamed Tributary to Lost Creek	Intermittent						ERM Desktop
McCone	135.07	Unnamed Tributary to Lost Creek	Intermittent						ERM Desktop
McCone	135.56	Unnamed Tributary to Lost Creek	Intermittent						ERM Desktop
McCone	136.60	Unnamed Tributary to Lost Creek	Intermittent						ERM Desktop
McCone	137.76	Lost Creek	Intermittent						ERM Desktop
McCone	138.44	Unnamed Tributary to Lost Creek	Intermittent						ERM Desktop
McCone	139.47	Unnamed Tributary to Lost Creek	Intermittent						ERM Desktop
McCone	139.93	Unnamed Tributary to Lost Creek	Intermittent						ERM Desktop
McCone	140.40	Unnamed Tributary to Lost Creek	Intermittent						ERM Desktop
McCone	141.25	Unnamed Tributary to Lost Creek	Intermittent						ERM Desktop
McCone	141.45	Unnamed Tributary to Lost Creek	Intermittent						ERM Desktop
McCone	142.20	Unnamed Tributary to Lost Creek	Intermittent						ERM Desktop
McCone	142.64	Unnamed Tributary to Lost Creek	Intermittent						ERM Desktop
McCone	142.90	Unnamed Tributary to Lost Creek	Intermittent						ERM Desktop
McCone	144.58	Unnamed Tributary to Redwater River	Intermittent						ERM Desktop
McCone	145.03	Unnamed Tributary to Redwater River	Intermittent						ERM Desktop
McCone	147.49	Unnamed Tributary to Redwater River	Intermittent						ERM Desktop
McCone	148.52	Redwater River	Lake/Pond	Recreation; Warm Water Non-Salmonid Fishes and associated Aquatic Life; Agricultural/Industrial; Degradation Prohibited	P	nd	nd	F	Keystone Survey
McCone	150.13	Unnamed Tributary to Cup Creek	Intermittent						ERM Desktop
McCone	150.70	Unnamed Tributary to Cup Creek	Intermittent						ERM Desktop
McCone	151.68	Unnamed Tributary to Cup Creek	Intermittent						ERM Desktop

Table 1 Waterbodies Crossed by the Project in Montana

County	Approximate Milepost	Waterbody Name [a]	Waterbody Type [b]	Use Class Description [c]	Use Attainment Assessment [d,e,f]				Source of Information [b]
					AqL	AG	DW	Rec	
McCone	151.84	Cup Creek	Intermittent						ERM Desktop
McCone	154.49	Unnamed Tributary to Cottonwood Creek	Intermittent						Keystone exp Digitized
McCone	154.64	Unnamed Tributary to Cottonwood Creek	Intermittent						ERM Desktop
McCone	155.64	Unnamed Tributary to Cottonwood Creek	Intermittent						ERM Desktop
McCone	155.66	Unnamed Tributary to Cottonwood Creek	Intermittent						ERM Desktop
McCone	156.45	Unnamed Tributary to Cottonwood Creek	Intermittent						ERM Desktop
Dawson	157.22	Unnamed Tributary to Cottonwood Creek	Intermittent						ERM Desktop
Dawson	157.50	Unnamed Tributary to Cottonwood Creek	Intermittent						ERM Desktop
Dawson	157.64	Unnamed Tributary to Cottonwood Creek	Intermittent						ERM Desktop
Dawson	157.86	Unnamed Tributary to Cottonwood Creek	Intermittent						ERM Desktop
Dawson	158.36	Cottonwood Creek	Intermittent						ERM Desktop
Dawson	159.32	Unnamed Tributary to Cottonwood Creek	Intermittent						ERM Desktop
Dawson	159.88	Unnamed Tributary to Cottonwood Creek	Intermittent						ERM Desktop
Dawson	160.24	Unnamed Tributary to Cottonwood Creek	Intermittent						ERM Desktop
Dawson	161.65	Unnamed Tributary to Berry Creek	Intermittent						ERM Desktop
Dawson	162.36	Unnamed Tributary to Berry Creek	Intermittent						ERM Desktop
Dawson	163.55	Unnamed Tributary to Timber Fork	Intermittent						ERM Desktop
Dawson	164.99	Unnamed Tributary to Timber Fork	Intermittent						ERM Desktop
Dawson	165.51	Unnamed Tributary to Timber Fork	Intermittent						ERM Desktop
Dawson	165.74	Unnamed Tributary to Timber Fork	Intermittent						ERM Desktop
Dawson	166.21	Unnamed Tributary to Timber Fork	Intermittent						ERM Desktop
Dawson	166.41	Unnamed Tributary to Timber Fork	Intermittent						ERM Desktop
Dawson	168.09	Unnamed Tributary to Timber Fork	Intermittent						Keystone Survey
Dawson	168.31	Unnamed Tributary to Timber Fork	Intermittent						ERM Desktop
Dawson	168.54	Unnamed Tributary to Timber Fork	Intermittent						ERM Desktop
Dawson	170.25	Unnamed Tributary to Clear Creek	Intermittent						ERM Desktop
Dawson	173.10	Unnamed Tributary to Clear Creek	Intermittent						ERM Desktop
Dawson	173.33	Unnamed Tributary to Clear Creek	Intermittent						ERM Desktop
Dawson	176.89	Unnamed Tributary to Clear Creek	Intermittent						ERM Desktop
Dawson	177.32	Clear Creek	Intermittent						Keystone Survey
Dawson	177.53	Unnamed Tributary to Clear Creek	Intermittent						Keystone Desktop
Dawson	178.36	Unnamed Tributary to Clear Creek	Intermittent						ERM Desktop
Dawson	178.98	Unnamed Tributary to Clear Creek	Intermittent						ERM Desktop
Dawson	179.29	Unnamed Tributary to Clear Creek	Intermittent						Keystone Desktop
Dawson	180.04	Unnamed Tributary to Clear Creek	Intermittent						Keystone Desktop
Dawson	180.42	Unnamed Tributary to Clear Creek	Intermittent						ERM Desktop
Dawson	181.59	Unnamed Tributary to Clear Creek	Intermittent						ERM Desktop
Dawson	181.66	Unnamed Tributary to Clear Creek	Intermittent						ERM Desktop
Dawson	181.71	Unnamed Tributary to Clear Creek	Intermittent						ERM Desktop
Dawson	182.02	Unnamed Tributary to Clear Creek	Intermittent						ERM Desktop
Dawson	182.29	Unnamed Tributary to Clear Creek	Intermittent						ERM Desktop
Dawson	182.84	Unnamed Tributary to Clear Creek	Intermittent						Keystone Desktop
Dawson	183.47	Unnamed Tributary to Clear Creek	Intermittent						ERM Desktop
Dawson	183.72	Unnamed Tributary to Clear Creek	Intermittent						ERM Desktop
Dawson	183.92	Unnamed Tributary to Clear Creek	Intermittent						ERM Desktop
Dawson	184.12	Unnamed Tributary to Clear Creek	Intermittent						ERM Desktop
Dawson	184.29	Unnamed Tributary to Clear Creek	Intermittent						ERM Desktop
Dawson	186.81	Unnamed Tributary to Yellowstone River	Intermittent						ERM Desktop
Dawson	187.13	Unnamed Tributary to Yellowstone River	Intermittent						ERM Desktop

Table 1 Waterbodies Crossed by the Project in Montana

County	Approximate Milepost	Waterbody Name [a]	Waterbody Type [b]	Use Class Description [c]	Use Attainment Assessment [d,e,f] AqL	AG	DW	Rec	Source of Information [b]
Dawson	187.28	Unnamed Tributary to Yellowstone River	Intermittent						ERM Desktop
Dawson	187.38	Unnamed Tributary to Yellowstone River	Intermittent						ERM Desktop
Dawson	187.62	Unnamed Tributary to Yellowstone River	Intermittent						ERM Desktop
Dawson	187.69	Unnamed Tributary to Yellowstone River	Intermittent						ERM Desktop
Dawson	187.73	Unnamed Tributary to Yellowstone River	Intermittent						ERM Desktop
Dawson	188.04	Unnamed Tributary to Yellowstone River	Intermittent						ERM Desktop
Dawson	188.05	Unnamed Tributary to Yellowstone River	Intermittent						ERM Desktop
Dawson	190.20	Unnamed Tributary to Yellowstone River	Intermittent						Keystone Survey
Dawson	190.22	Unnamed Tributary to Yellowstone River	Intermittent						ERM Desktop
Dawson	191.09	Unnamed Tributary to Yellowstone River	Intermittent						ERM Desktop
Dawson	191.69	Unnamed Tributary to Yellowstone River	Intermittent						Keystone Desktop
Dawson	194.81	Unnamed Tributary to Yellowstone River	Intermittent						ERM Desktop
Dawson	196.02	Unnamed Tributary to Yellowstone River	Man Made Ditch						ERM Desktop
Dawson	196.15	Unnamed Tributary to Yellowstone River	Intermittent						ERM Desktop
Dawson	196.36	Unnamed Tributary to Yellowstone River	Intermittent						ERM Desktop
Dawson	197.05	Unnamed Tributary to Yellowstone River	Intermittent						ERM Desktop
Dawson	197.23	Unnamed Tributary to Yellowstone River	Intermittent						ERM Desktop
Dawson	197.76	Unnamed Tributary to Yellowstone River	Man Made Ditch						ERM Desktop
Dawson	197.81	Yellowstone River	Perennial	Drinking Water; Recreation; Warm Water Non-Salmonid Fishes and associated Aquatic Life; Agricultural/Industrial	P	F	X	X	Keystone Survey
Dawson	198.43	Unnamed Tributary to Yellowstone River	Intermittent						Keystone Unknown
Prairie	199.92	Unnamed Tributary to Yellowstone River	Intermittent						Keystone Desktop
Prairie	200.25	Unnamed Tributary to Yellowstone River	Intermittent						Keystone Desktop
Prairie	200.36	Unnamed Tributary to Yellowstone River	Intermittent						Keystone Desktop
Prairie	200.43	Unnamed Tributary to Yellowstone River	Intermittent						Keystone Desktop
Prairie	201.76	Unnamed Tributary to Spring Creek	Intermittent						ERM Desktop
Prairie	201.88	Unnamed Tributary to Spring Creek	Intermittent						Keystone Survey
Prairie	202.47	Unnamed Tributary to Spring Creek	Intermittent						ERM Desktop
Prairie	202.54	Unnamed Tributary to Spring Creek	Intermittent						ERM Desktop
Prairie	203.64	Spring Creek	Intermittent						Keystone Desktop
Prairie	204.34	Unnamed Tributary to Spring Creek	Intermittent						Keystone Desktop
Prairie	206.49	Unnamed Tributary to Spring Creek	Intermittent						ERM Desktop
Prairie	207.24	Unnamed Tributary to Sand Butte Creek	Intermittent						ERM Desktop
Prairie	207.75	Unnamed Tributary to Sand Butte Creek	Intermittent						ERM Desktop
Prairie	209.27	Unnamed Tributary to West Fork Hay Creek	Intermittent						ERM Desktop
Prairie	209.65	Unnamed Tributary to West Fork Hay Creek	Intermittent						ERM Desktop
Prairie	210.00	West Fork Hay Creek	Intermittent						ERM Desktop
Prairie	211.00	Hay Creek	Intermittent						Keystone Survey
Prairie	211.04	Unnamed Tributary to Hay Creek	Intermittent						Keystone Desktop
Prairie	213.54	Unnamed Tributary to McNancy Creek	Intermittent						ERM Desktop
Prairie	214.21	McNaney Creek	Intermittent						ERM Desktop
Prairie	214.30	Unnamed Tributary to McNancy Creek	Intermittent						ERM Desktop
Prairie	214.95	Unnamed Tributary to McNancy Creek	Intermittent						ERM Desktop
Prairie	215.75	Unnamed Tributary to Cabin Creek	Intermittent						ERM Desktop
Prairie	216.43	Unnamed Tributary to Cabin Creek	Intermittent						ERM Desktop
Prairie	216.98	Unnamed Tributary to Cabin Creek	Intermittent						ERM Desktop
Prairie	217.30	Unnamed Tributary to Cabin Creek	Intermittent						ERM Desktop
Prairie	218.02	Unnamed Tributary to Cabin Creek	Intermittent						ERM Desktop
Prairie	218.37	Unnamed Tributary to Cabin Creek	Intermittent						ERM Desktop

Table 1 Waterbodies Crossed by the Project in Montana

County	Approximate Milepost	Waterbody Name [a]	Waterbody Type [b]	Use Class Description [c]	Use Attainment Assessment [d,e,f] AqL	AG	DW	Rec	Source of Information [b]
Prairie	218.91	Unnamed Tributary to Cabin Creek	Intermittent						Keystone Desktop
Prairie	219.45	Unnamed Tributary to Cabin Creek	Intermittent						ERM Desktop
Fallon	221.98	Unnamed Tributary to Deer Creek	Intermittent						ERM Desktop
Fallon	224.10	Unnamed Tributary to Pennel Creek	Intermittent						Keystone Desktop
Fallon	226.45	Unnamed Tributary to Dry Fork Creek	Intermittent						ERM Desktop
Fallon	228.63	Lawrence Creek	Intermittent						Keystone Desktop
Fallon	228.93	Dry Fork Creek	Intermittent						Keystone Desktop
Fallon	229.37	Unnamed Tributary to Dry Fork Creek	Intermittent						ERM Desktop
Fallon	229.44	Unnamed Tributary to Dry Fork Creek	Intermittent						ERM Desktop
Fallon	229.70	Unnamed Tributary to Dry Fork Creek	Intermittent						Keystone Desktop
Fallon	230.27	Unnamed Tributary to Dry Fork Creek	Intermittent						Keystone Unknown
Fallon	230.62	Unnamed Tributary to Dry Fork Creek	Intermittent						Keystone Unknown
Fallon	233.80	Unnamed Tributary to Pennel Creek	Intermittent						Keystone Desktop
Fallon	234.75	Unnamed Tributary to Pennel Creek	Intermittent						ERM Desktop
Fallon	234.86	Unnamed Tributary to Pennel Creek	Intermittent						ERM Desktop
Fallon	235.41	Pennel Creek	Intermittent	Recreation; Warm Water Non-Salmonid Fishes and associated Aquatic Life; Agricultural/Industrial; Degradation Prohibited	P	nd	nd	F	ERM Desktop
Fallon	235.53	Unnamed Tributary to Pennel Creek	Intermittent						ERM Desktop
Fallon	237.44	Unnamed Tributary to Pennel Creek	Intermittent						ERM Desktop
Fallon	238.65	Unnamed Tributary to Pennel Creek	Intermittent						ERM Desktop
Fallon	240.95	Unnamed Tributary to Pennel Creek	Intermittent						ERM Desktop
Fallon	241.65	Unnamed Tributary to Pennel Creek	Intermittent						ERM Desktop
Fallon	243.51	Unnamed Tributary to Sandstone Creek	Lake/Pond						ERM Desktop
Fallon	243.92	Unnamed Tributary to Sandstone Creek	Intermittent						Keystone Desktop
Fallon	244.83	Unnamed Tributary to Sandstone Creek	Intermittent						Keystone Desktop
Fallon	245.08	Unnamed Tributary to Sandstone Creek	Intermittent						Keystone Desktop
Fallon	246.28	Unnamed Tributary to Sandstone Creek	Intermittent						ERM Desktop
Fallon	246.66	Unnamed Tributary to Sandstone Creek	Intermittent						ERM Desktop
Fallon	247.05	Sandstone Creek	Perennial	Recreation; Warm Water Non-Salmonid Fishes and associated Aquatic Life; Agricultural/Industrial; Degradation Prohibited	P	nd	nd	F	ERM Desktop
Fallon	247.56	Unnamed Tributary to Sandstone Creek	Intermittent						ERM Desktop
Fallon	248.93	Unnamed Tributary to Red Butte Creek	Intermittent						ERM Desktop
Fallon	248.95	Unnamed Tributary to Red Butte Creek	Intermittent						ERM Desktop
Fallon	248.95	Unnamed Tributary to Red Butte Creek	Intermittent						ERM Desktop
Fallon	248.98	Red Butte Creek	Intermittent						Keystone Survey
Fallon	249.12	Unnamed Tributary to Red Butte Creek	Intermittent						ERM Desktop
Fallon	250.44	Unnamed Tributary to Red Butte Creek	Intermittent						ERM Desktop
Fallon	252.13	Unnamed Tributary to Red Butte Creek	Intermittent						ERM Desktop
Fallon	252.95	Unnamed Tributary to Red Butte Creek	Intermittent						ERM Desktop
Fallon	253.46	Unnamed Tributary to Red Butte Creek	Intermittent						ERM Desktop
Fallon	253.87	Unnamed Tributary to Red Butte Creek	Intermittent						Keystone Unknown
Fallon	254.31	Unnamed Tributary to Red Butte Creek	Intermittent						Keystone Desktop
Fallon	254.39	Unnamed Tributary to Red Butte Creek	Intermittent						ERM Desktop
Fallon	254.84	Unnamed Tributary to Red Butte Creek	Intermittent						Keystone Desktop
Fallon	256.10	Unnamed Tributary to Little Beaver Creek	Intermittent						Keystone Survey
Fallon	256.19	Unnamed Tributary to Little Beaver Creek	Intermittent						Keystone Survey
Fallon	257.44	Unnamed Tributary to Little Beaver Creek	Intermittent						ERM Desktop

Table 1 Waterbodies Crossed by the Project in Montana

County	Approximate Milepost	Waterbody Name [a]	Waterbody Type [b]	Use Class Description [c]	Use Attainment Assessment [d,e,f] AqL	AG	DW	Rec	Source of Information [b]
Fallon	258.07	Unnamed Tributary to Little Beaver Creek	Intermittent						Keystone Survey
Fallon	260.19	Unnamed Tributary to Hidden Water Creek	Intermittent						ERM Desktop
Fallon	261.09	Hidden Water Creek	Intermittent						ERM Desktop
Fallon	261.72	Unnamed Tributary to Hidden Water Creek	Intermittent						ERM Desktop
Fallon	262.20	Unnamed Tributary to Hidden Water Creek	Intermittent						ERM Desktop
Fallon	262.24	Unnamed Tributary to Hidden Water Creek	Intermittent						Keystone Survey
Fallon	264.04	Unnamed Tributary to Little Beaver Creek	Intermittent						Keystone Desktop
Fallon	265.33	Little Beaver Creek	Perennial	Recreation; Warm Water Non-Salmonid Fishes and associated Aquatic Life; Agricultural/Industrial; Degradation Prohibited	nd	nd	nd	nd	Keystone Desktop
Fallon	265.75	Unnamed Tributary to Little Beaver Creek	Intermittent						ERM Desktop
Fallon	267.36	Unnamed Tributary to Little Beaver Creek	Intermittent						ERM Desktop
Fallon	268.57	Unnamed Tributary to Mud Creek	Intermittent						ERM Desktop
Fallon	268.63	Unnamed Tributary to Mud Creek	Intermittent						ERM Desktop
Fallon	268.81	Unnamed Tributary to Mud Creek	Intermittent						ERM Desktop
Fallon	268.87	Unnamed Tributary to Mud Creek	Intermittent						ERM Desktop
Fallon	270.11	Unnamed Tributary to Mud Creek	Intermittent						ERM Desktop
Fallon	270.36	Unnamed Tributary to Mud Creek	Intermittent						Keystone Desktop
Fallon	270.74	Unnamed Tributary to Mud Creek	Intermittent						Keystone Desktop
Fallon	271.43	Unnamed Tributary to Mud Creek	Intermittent						Keystone Desktop
Fallon	273.13	Unnamed Tributary to Soda Creek	Intermittent						Keystone Desktop
Fallon	273.88	Unnamed Tributary to Soda Creek	Intermittent						ERM Desktop
Fallon	274.60	Unnamed Tributary to Soda Creek	Intermittent						Keystone Desktop
Fallon	274.95	Unnamed Tributary to Soda Creek	Lake/Pond						ERM Desktop
Fallon	275.09	Soda Creek	Intermittent						Keystone Survey
Fallon	275.12	Unnamed Tributary to Soda Creek	Intermittent						Keystone Survey
Fallon	275.75	Unnamed Tributary to Soda Creek	Intermittent						ERM Desktop
Fallon	276.25	Unnamed Tributary to Soda Creek	Intermittent						ERM Desktop
Fallon	276.77	Sheep Creek	Intermittent						ERM Desktop
Fallon	278.08	Unnamed Tributary to North Fork Coal Bank Creek	Intermittent						Keystone Desktop
Fallon	279.04	North Fork Coal Bank Creek	Intermittent						Keystone Survey
Fallon	279.30	Unnamed Tributary to North Fork Coal Bank Creek	Intermittent						Keystone Desktop
Fallon	280.83	Unnamed Tributary to South Fork Coal Bank Creek	Intermittent						ERM Desktop
Fallon	282.23	South Fork Coal Bank Creek	Intermittent						ERM Desktop
Fallon	283.72	Unnamed Tributary to Box Elder Creek	Intermittent						ERM Desktop
Fallon	284.31	Unnamed Tributary to Box Elder Creek	Intermittent						ERM Desktop
Fallon	284.43	Unnamed Tributary to Box Elder Creek	Intermittent						ERM Desktop
Fallon	284.45	Boxelder Creek	Perennial	Recreation; Warm Water Non-Salmonid Fishes and associated Aquatic Life; Agricultural/Industrial; Degradation Prohibited	X	nd	nd	X	Keystone Survey
Fallon	284.94	Unnamed Tributary to Box Elder Creek	Intermittent						ERM Desktop

Table Notes:

a GIS data source for waterbody name is from the 2012 National Hydrography Dataset (NHD). Accessed on Sept. 17, 2012; ftp://nhdftp.usgs.gov/DataSets/Staged/States/FileGDB/HighResolution/

b Waterbody type and source of information are based upon a hierarchy. The hierarchy is as follows: If there is only National Hydrography Dataset (NHD) then the source is ERM Desktop. If TransCanada (Keystone) data from survey or desktop does not match NHD, then source is ERM Desktop. If Keystone desktop data matches NHD, then source is Keystone Desktop. If Keystone survey data matches NHD, then source is Keystone Survey. If there is only Keystone data, then source is either Keystone Survey or Keystone Desktop. Keystone Unknown denotes Keystone-supplied data that is not sourced and is not superseded by sourced data.

c Montana 2012 Final Water Quality Integrated Report, Montana Department of Environmental Quality, Accessed on September 24, 2012

d Montana 2012 Final Water Quality Integrated Report, Montana Department of Environmental Quality, Accessed on September 24, 2012

e AqL = Aquatic Life; AG = Agriculture; DW = Drinking Water; Rec = Recreation.

Table 2 Waterbodies Crossed by the Project in Nebraska

County	Approximate Milepost	Waterbody Name [a]	Waterbody Type [b]	State Water Quality Classification [c]	Supports Use Designation [c]	Source of Information [b]
Keya Paha	601.07	Unnamed Tributary to Buffalo Creek	Intermittent			Keystone Desktop
Keya Paha	601.33	Unnamed Tributary to Buffalo Creek	Intermittent			Keystone Desktop
Keya Paha	601.85	Unnamed Tributary to Buffalo Creek	Intermittent			Keystone Desktop
Keya Paha	602.06	Unnamed Tributary to Buffalo Creek	Perennial	Warm Water Aquatic Life (Class B); Agricultural Water Supply - Class A; Aesthetics	Not Assessed; Not Assessed; Not Assessed	ERM Desktop
Keya Paha	602.07	Unnamed Tributary to Buffalo Creek	Perennial	Warm Water Aquatic Life (Class B); Agricultural Water Supply - Class A; Aesthetics	Not Assessed; Not Assessed; Not Assessed	ERM Desktop
Keya Paha	602.08	Unnamed Tributary to Buffalo Creek	Perennial	Warm Water Aquatic Life (Class B); Agricultural Water Supply - Class A; Aesthetics	Not Assessed; Not Assessed; Not Assessed	ERM Desktop
Keya Paha	604.36	Dry Creek	Intermittent	Warm Water Aquatic Life (Class B); Agricultural Water Supply - Class A; Aesthetics	Not Assessed; Not Assessed; Not Assessed	Keystone Desktop
Keya Paha	605.68	Indian Creek	Intermittent			ERM Desktop
Keya Paha	606.19	Unnamed Tributary to Indian Creek	Intermittent			ERM Desktop
Keya Paha	607.41	Unnamed Tributary to Shingle Creek	Intermittent			ERM Desktop
Keya Paha	607.75	Shingle Creek	Intermittent			ERM Desktop
Keya Paha	610.55	Wolf Creek	Perennial	Cold Water Aquatic Life (Class B); Agricultural Water Supply - Class A; Aesthetics	Not Assessed; Not Assessed; Not Assessed	Keystone Desktop
Keya Paha	612.22	Unnamed Tributary to Keya Paha River	Intermittent			ERM Desktop
Keya Paha	612.47	Unnamed Tributary to Keya Paha River	Perennial			Keystone Desktop
Keya Paha	612.84	Unnamed Tributary to Keya Paha River	Intermittent			ERM Desktop
Keya Paha	613.24	Unnamed Tributary to Keya Paha River	Intermittent			ERM Desktop
Keya Paha	613.73	Spotted Tail Creek	Perennial	Cold Water Aquatic Life (Class B); Agricultural Water Supply - Class A; Aesthetics	Not Assessed; Not Assessed; Not Assessed	Keystone Desktop
Keya Paha	613.74	Unnamed Tributary to Spotted Tail Creek	Intermittent			Keystone Desktop
Keya Paha	613.79	Unnamed Tributary to Spotted Tail Creek	Intermittent			ERM Desktop
Keya Paha	613.80	Unnamed Tributary to Spotted Tail Creek	Intermittent			ERM Desktop
Keya Paha	614.10	Unnamed Tributary to Spotted Tail Creek	Perennial			Keystone Desktop
Keya Paha	614.80	Unnamed Tributary to Dry Run Creek	Intermittent			ERM Desktop
Keya Paha	615.13	Dry Run Creek	Intermittent			Keystone Desktop
Keya Paha	615.63	Unnamed Tributary to Alkali Creek	Intermittent			Keystone Desktop
Keya Paha	616.97	Alkali Creek	Perennial	Warm Water Aquatic Life (Class B); Agricultural Water Supply - Class A; Aesthetics	Not Assessed; Not Assessed; Not Assessed	Keystone Desktop
Boyd	618.11	Keya Paha River	Perennial	Primary Contact Recreation; Warm Water Aquatic Life (Class A); Agricultural Water Supply; Aesthetics	Impaired; Supported; Supported; Supported	Keystone Desktop

Table 2 Waterbodies Crossed by the Project in Nebraska

County	Approximate Milepost	Waterbody Name [a]	Waterbody Type [b]	State Water Quality Classification [c]	Supports Use Designation [c]	Source of Information [b]
Boyd	621.18	Big Creek	Intermittent	Cold Water Aquatic Life (Class B); Agricultural Water Supply - Class A; Aesthetics	Not Assessed; Not Assessed; Not Assessed	ERM Desktop
Holt	626.09	Niobrara River	Perennial	Primary Contact Recreation; Warm Water Aquatic Life (Class A*); Agricultural Water Supply; Aesthetics	Impaired; Supported; Supported; Supported	Keystone Desktop
Holt	626.18	Unnamed Tributary to Niobrara River	Intermittent			ERM Desktop
Holt	626.51	Unnamed Tributary to Niobrara River	Intermittent			ERM Desktop
Holt	626.86	Beaver Creek	Perennial	Cold Water Aquatic Life (Class B); Agricultural Water Supply - Class A; Aesthetics	Not Assessed; Not Assessed; Not Assessed	Keystone Desktop
Holt	628.02	Unnamed Tributary to Niobrara River	Intermittent			ERM Desktop
Holt	629.55	Unnamed Tributary to Niobrara River	Intermittent			ERM Desktop
Holt	632.69	Big Sandy Creek	Perennial	Primary Contact Recreation; Warm Water Aquatic Life (Class A); Agricultural Water Supply; Aesthetics	Not Assessed; Not Assessed; Not Assessed; Not Assessed	Keystone Desktop
Holt	635.07	Unnamed Tributary to Big Sandy Creek	Intermittent			ERM Desktop
Holt	639.96	Unnamed Tributary to Brush Creek	Perennial	Cold Water Aquatic Life (Class B); Agricultural Water Supply - Class A; Aesthetics	Not Assessed; Not Assessed; Not Assessed	ERM Desktop
Holt	640.28	Unnamed Tributary to Brush Creek	Perennial	Cold Water Aquatic Life (Class B); Agricultural Water Supply - Class A; Aesthetics	Not Assessed; Not Assessed; Not Assessed	ERM Desktop
Holt	640.93	Unnamed Tributary to Brush Creek	Intermittent			Keystone Desktop
Holt	641.20	Unnamed Tributary to Brush Creek	Intermittent			Keystone Desktop
Holt	641.97	Unnamed Tributary to Brush Creek	Intermittent			Keystone Desktop
Holt	642.50	Brush Creek	Lake/Pond	Cold Water Aquatic Life (Class B); Agricultural Water Supply - Class A; Aesthetics	Not Assessed; Not Assessed; Not Assessed	ERM Desktop
Holt	646.82	North Branch Eagle Creek	Perennial	Primary Contact Recreation; Cold Water Aquatic Life (Class B); Agricultural Water Supply; Aesthetics	Not Assessed; Not Assessed; Not Assessed; Not Assessed	Keystone Desktop
Holt	649.30	Middle Branch Eagle Creek	Perennial	Primary Contact Recreation; Cold Water Aquatic Life (Class B); Agricultural Water Supply - Class A; Aesthetics	Not Assessed; Not Assessed; Not Assessed	Keystone Survey
Holt	649.75	Unnamed Tributary to Middle Branch Eagle Creek	Intermittent			ERM Desktop
Holt	650.38	Unnamed Tributary to Middle Branch Eagle Creek	Intermittent			ERM Desktop
Holt	650.69	Unnamed Tributary to Middle Branch Eagle Creek	Intermittent			ERM Desktop
Holt	652.65	Unnamed Tributary to East Branch Eagle Creek	Intermittent			Keystone Desktop

Table 2 Waterbodies Crossed by the Project in Nebraska

County	Approximate Milepost	Waterbody Name [a]	Waterbody Type [b]	State Water Quality Classification [c]	Supports Use Designation [c]	Source of Information [b]
Holt	652.79	Unnamed Tributary to East Branch Eagle Creek	Intermittent			Keystone Desktop
Holt	653.07	East Branch Eagle Creek	Perennial	Cold Water Aquatic Life (Class B); Agricultural Water Supply - Class A; Aesthetics	Not Assessed; Not Assessed; Not Assessed	ERM Desktop
Holt	656.54	Honey Creek	Intermittent	Warm Water Aquatic Life (Class B); Agricultural Water Supply - Class A; Aesthetics	Not Assessed; Not Assessed; Not Assessed	Keystone Desktop
Holt	658.49	Unnamed Tributary to Blackbird Creek	Intermittent			ERM Desktop
Holt	658.60	Blackbird Creek	Intermittent	Warm Water Aquatic Life (Class B); Agricultural Water Supply - Class A; Aesthetics	Not Assessed; Not Assessed; Not Assessed	ERM Desktop
Holt	659.15	Unnamed Tributary to Blackbird Creek	Intermittent			ERM Desktop
Holt	659.77	Unnamed Tributary to Blackbird Creek	Intermittent			ERM Desktop
Holt	661.23	Unnamed Tributary to Redbird Creek	Intermittent			ERM Desktop
Holt	661.68	Unnamed Tributary to Redbird Creek	Intermittent			ERM Desktop
Holt	661.96	Unnamed Tributary to Redbird Creek	Intermittent			ERM Desktop
Holt	663.01	Redbird Creek	Perennial	Warm Water Aquatic Life (Class B); Agricultural Water Supply - Class A; Aesthetics	Not Assessed; Not Assessed; Not Assessed	Keystone Desktop
Holt	663.02	Redbird Creek	Perennial	Warm Water Aquatic Life (Class B); Agricultural Water Supply - Class A; Aesthetics	Not Assessed; Not Assessed; Not Assessed	Keystone Desktop
Holt	663.03	Redbird Creek	Perennial	Warm Water Aquatic Life (Class B); Agricultural Water Supply - Class A; Aesthetics	Not Assessed; Not Assessed; Not Assessed	Keystone Desktop
Holt	663.71	Unnamed Tributary to Redbird Creek	Intermittent			ERM Desktop
Holt	664.55	Unnamed Tributary to Redbird Creek	Intermittent			Keystone Desktop
Holt	664.64	Unnamed Tributary to Redbird Creek	Intermittent	Warm Water Aquatic Life (Class B); Agricultural Water Supply - Class A; Aesthetics	Not Assessed; Not Assessed; Not Assessed	Keystone Desktop
Holt	672.54	Unnamed Tributary to North Branch Verdigre Creek	Intermittent			ERM Desktop
Holt	672.91	Unnamed Tributary to North Branch Verdigre Creek	Intermittent			Keystone Desktop
Holt	675.27	Middle Branch Verdigre Creek	Intermittent	Cold Water Aquatic Life (Class B); Agricultural Water Supply - Class A; Aesthetics	Not Assessed; Not Assessed; Not Assessed	Keystone Desktop
Holt	675.96	Unnamed Tributary to Middle Branch Verdigre Creek	Intermittent			Keystone Desktop
Holt	679.15	Unnamed Tributary to South Branch Verdigre Creek	Intermittent			ERM Desktop

Table 2 Waterbodies Crossed by the Project in Nebraska

County	Approximate Milepost	Waterbody Name [a]	Waterbody Type [b]	State Water Quality Classification [c]	Supports Use Designation [c]	Source of Information [b]
Holt	679.99	South Branch Verdigre Creek	Perennial	Primary Contact Recreation; Cold Water Aquatic Life (Class B); Agricultural Water Supply; Aesthetics	Not Assessed; Not Assessed; Not Assessed; Not Assessed	ERM Desktop
Holt	680.13	Unnamed Tributary to South Branch Verdigre Creek	Intermittent			ERM Desktop
Holt	680.49	Unnamed Tributary to South Branch Verdigre Creek	Intermittent			ERM Desktop
Antelope	681.36	Unnamed Tributary to South Branch Verdigre Creek	Intermittent			ERM Desktop
Antelope	683.07	Big Springs Creek	Perennial	Cold Water Aquatic Life (Class B); Agricultural Water Supply - Class A; Aesthetics	Not Assessed; Not Assessed; Not Assessed	ERM Desktop
Antelope	683.45	Unnamed Tributary to Big Springs Creek	Intermittent			Keystone Desktop
Antelope	684.81	Unnamed Tributary to Big Springs Creek	Intermittent			ERM Desktop
Antelope	684.92	Unnamed Tributary to Big Springs Creek	Intermittent			ERM Desktop
Antelope	685.09	Unnamed Tributary to Big Springs Creek	Intermittent	Warm Water Aquatic Life (Class B); Agricultural Water Supply - Class A; Aesthetics	Not Assessed; Not Assessed; Not Assessed	Keystone Desktop
Antelope	686.88	Unnamed Tributary to Hathoway Slough	Intermittent			ERM Desktop
Antelope	687.62	Unnamed Tributary to Hathoway Slough	Intermittent			ERM Desktop
Antelope	687.86	Hathoway Slough	Intermittent	Warm Water Aquatic Life (Class B); Agricultural Water Supply - Class A; Aesthetics	Not Assessed; Not Assessed; Not Assessed	ERM Desktop
Antelope	704.30	Unnamed Tributary to Willow Creek	Intermittent			ERM Desktop
Antelope	705.24	Unnamed Tributary to Al Hopkins Creek	Intermittent			Keystone Survey
Antelope	705.38	Unnamed Tributary to Al Hopkins Creek	Intermittent			Keystone Survey
Antelope	705.39	Unnamed Tributary to Willow Creek	Intermittent			ERM Desktop
Antelope	707.73	Al Hopkins Creek	Intermittent	Warm Water Aquatic Life (Class B); Agricultural Water Supply - Class A; Aesthetics	Not Assessed; Not Assessed; Not Assessed	ERM Desktop
Antelope	709.40	Unnamed Tributary to Elkhorn River	Intermittent			ERM Desktop
Antelope	711.46	Unnamed Tributary to Elkhorn River	Intermittent			ERM Desktop
Antelope	713.34	Elkhorn River	Perennial	Primary Contact Recreation; Warm Water Aquatic Life (Class A*); Agricultural Water Supply; Aesthetics	Impaired; Supported; Supported; Supported	Keystone Survey
Antelope	715.66	Unnamed Tributary to Elkhorn River	Intermittent			ERM Desktop
Antelope	716.48	Unnamed Tributary to Saint Clair Creek	Intermittent			ERM Desktop
Antelope	716.81	Unnamed Tributary to Saint Clair Creek	Intermittent			Keystone Desktop
Antelope	716.89	Unnamed Tributary to Saint Clair Creek	Intermittent			ERM Desktop
Antelope	717.04	Unnamed Tributary to Saint Clair Creek	Intermittent			ERM Desktop
Antelope	717.49	Unnamed Tributary to Saint Clair Creek	Intermittent			ERM Desktop
Antelope	718.54	Saint Clair Creek	Intermittent			ERM Desktop
Antelope	718.66	Unnamed Tributary to Saint Clair Creek	Intermittent			Keystone Desktop

Table 2 Waterbodies Crossed by the Project in Nebraska

County	Approximate Milepost	Waterbody Name [a]	Waterbody Type [b]	State Water Quality Classification [c]	Supports Use Designation [c]	Source of Information [b]
Antelope	718.73	Unnamed Tributary to Saint Clair Creek	Intermittent			Keystone Desktop
Antelope	720.28	Unnamed Tributary to Ives Creek	Intermittent			Keystone Desktop
Antelope	720.86	Unnamed Tributary to Ives Creek	Intermittent			Keystone Desktop
Antelope	721.52	Unnamed Tributary to Ives Creek	Intermittent			Keystone Desktop
Antelope	721.65	Unnamed Tributary to Ives Creek	Intermittent			ERM Desktop
Antelope	721.71	Unnamed Tributary to Ives Creek	Intermittent			ERM Desktop
Antelope	722.39	Ives Creek	Intermittent	Warm Water Aquatic Life (Class B); Agricultural Water Supply - Class A; Aesthetics	Not Assessed; Not Assessed; Not Assessed	ERM Desktop
Antelope	722.39	Unnamed Tributary to Ives Creek	Intermittent			ERM Desktop
Antelope	723.48	Unnamed Tributary to Ives Creek	Intermittent			ERM Desktop
Antelope	723.58	Unnamed Tributary to Ives Creek	Intermittent			ERM Desktop
Boone	724.65	Unnamed Tributary to North Shell Creek	Intermittent			ERM Desktop
Boone	725.20	North Shell Creek	Intermittent			Keystone Survey
Boone	726.05	Unnamed Tributary to North Shell Creek	Intermittent			ERM Desktop
Boone	726.65	Unnamed Tributary to North Shell Creek	Intermittent			ERM Desktop
Boone	726.76	Unnamed Tributary to North Shell Creek	Intermittent			ERM Desktop
Boone	727.59	Unnamed Tributary to North Shell Creek	Intermittent			ERM Desktop
Boone	727.82	Unnamed Tributary to North Shell Creek	Intermittent			ERM Desktop
Boone	730.18	Unnamed Tributary to Shell Creek	Intermittent			ERM Desktop
Boone	731.08	Shell Creek	Intermittent			ERM Desktop
Boone	731.25	Unnamed Tributary to Shell Creek	Intermittent			Keystone Survey
Boone	731.37	Unnamed Tributary to Shell Creek	Intermittent			ERM Desktop
Boone	731.68	Unnamed Tributary to Shell Creek	Intermittent			ERM Desktop
Boone	733.07	Unnamed Tributary to Shell Creek	Intermittent			ERM Desktop
Boone	735.69	Unnamed Tributary to Vorhees Creek	Intermittent			ERM Desktop
Boone	736.10	Unnamed Tributary to Vorhees Creek	Intermittent			Keystone Desktop
Boone	737.33	Vorhees Creek	Intermittent			Keystone Desktop
Boone	738.21	Unnamed Tributary to Vorhees Creek	Intermittent			ERM Desktop
Boone	738.56	Unnamed Tributary to Vorhees Creek	Intermittent			ERM Desktop
Boone	738.98	Unnamed Tributary to Vorhees Creek	Intermittent			ERM Desktop
Boone	739.27	Unnamed Tributary to Vorhees Creek	Intermittent			ERM Desktop
Boone	740.04	Unnamed Tributary to Vorhees Creek	Intermittent			ERM Desktop
Boone	740.22	Vorhees Creek	Intermittent			Keystone Survey
	740.38	Vorhees Creek	Intermittent			Keystone Survey
Boone	741.24	Unnamed Tributary to Vorhees Creek	Intermittent			ERM Desktop
Boone	743.77	Beaver Creek	Perennial	Primary Contact Recreation; Warm Water Aquatic Life (Class A); Agricultural Water Supply - Class A; Aesthetics	Impaired; Impaired; Supported; Supported	Keystone Survey
Boone	744.40	Unnamed Tributary to Beaver Creek	Intermittent			Keystone Survey
Boone	744.45	Unnamed Tributary to Beaver Creek	Intermittent			Keystone Survey
Boone	744.91	Unnamed Tributary to Beaver Creek	Intermittent			ERM Desktop

Table 2 Waterbodies Crossed by the Project in Nebraska

County	Approximate Milepost	Waterbody Name [a]	Waterbody Type [b]	State Water Quality Classification [c]	Supports Use Designation [c]	Source of Information [b]
Boone	745.08	Unnamed Tributary to Beaver Creek	Intermittent			ERM Desktop
Boone	746.15	Unnamed Tributary to Beaver Creek	Intermittent			ERM Desktop
Boone	748.58	Bogus Creek	Intermittent	Warm Water Aquatic Life (Class B); Agricultural Water Supply - Class A; Aesthetics	Not Assessed; Not Assessed; Not Assessed	Keystone Survey
Boone	748.77	Unnamed Tributary to Bogus Creek	Intermittent			Keystone Survey
Boone	749.30	Unnamed Tributary to Bogus Creek	Intermittent			ERM Desktop
Boone	749.64	Unnamed Tributary to Bogus Creek	Intermittent			Keystone Desktop
Boone	749.99	Unnamed Tributary to Bogus Creek	Intermittent			Keystone Desktop
Boone	750.39	Unnamed Tributary to Bogus Creek	Intermittent			ERM Desktop
Boone	750.43	Unnamed Tributary to Bogus Creek	Intermittent			Keystone Desktop
Boone	750.59	Unnamed Tributary to Bogus Creek	Intermittent			ERM Desktop
Nance	753.10	Unnamed Tributary to Skeedee Creek	Intermittent			ERM Desktop
Nance	759.62	Plum Creek	Perennial	Warm Water Aquatic Life (Class B); Agricultural Water Supply - Class A; Aesthetics	Not Assessed; Not Assessed; Not Assessed	Keystone Desktop
Nance	760.12	Unnamed Tributary to Plum Creek	Intermittent			Keystone Desktop
Nance	761.67	Loup River	Perennial	Primary Contact Recreation; Warm Water Aquatic Life (Class A); Agricultural Water Supply - Class A; Aesthetics	Impaired; Supported; Supported; Supported	Keystone Desktop
Nance	761.80	Unnamed Tributary to Loup River	Intermittent			Keystone Desktop
Nance	761.89	Unnamed Tributary to Loup River	Lake/Pond			ERM Desktop
Nance	762.00	Unnamed Tributary to Loup River	Intermittent			Keystone Desktop
Nance	762.21	Unnamed Tributary to Loup River	Intermittent			Keystone Desktop
Nance	762.82	Unnamed Tributary to Loup River	Intermittent			Keystone Desktop
Nance	763.48	Unnamed Tributary to Loup River	Intermittent			Keystone Desktop
Nance	763.66	Unnamed Tributary to Loup River	Intermittent			Keystone Desktop
Nance	764.05	Unnamed Tributary to Loup River	Intermittent			ERM Desktop
Nance	765.32	Unnamed Tributary to Prairie Creek	Intermittent			ERM Desktop
Nance	765.65	Unnamed Tributary to Prairie Creek	Intermittent			ERM Desktop
Nance	766.48	Unnamed Tributary to Prairie Creek	Intermittent			ERM Desktop
Nance	766.65	Prairie Creek	Perennial	Warm Water Aquatic Life (Class B); Agricultural Water Supply- Class A; Aesthetics	Impaired; Supported; Supported	Keystone Desktop
Merrick	770.05	Unnamed Tributary to Silver Creek	Intermittent			ERM Desktop
Merrick	770.24	Unnamed Tributary to Silver Creek	Intermittent			ERM Desktop
Merrick	771.53	Silver Creek	Intermittent			ERM Desktop
Merrick	771.76	Unnamed Tributary to Silver Creek	Intermittent			ERM Desktop
Merrick	772.25	Unnamed Tributary to Silver Creek	Intermittent			ERM Desktop
Merrick	772.49	Unnamed Tributary to Silver Creek	Intermittent			ERM Desktop
Merrick	773.35	Unnamed Tributary to Silver Creek	Intermittent			ERM Desktop
Merrick	773.58	Unnamed Tributary to Silver Creek	Intermittent			ERM Desktop

Table 2 Waterbodies Crossed by the Project in Nebraska

County	Approximate Milepost	Waterbody Name [a]	Waterbody Type [b]	State Water Quality Classification [c]	Supports Use Designation [c]	Source of Information [b]
Merrick	773.89	Unnamed Tributary to Silver Creek	Intermittent			Keystone Desktop
Polk	775.14	Platte River	Perennial	Primary Contact Recreation; Warm Water Aquatic Life (Class A*); Agricultural Water Supply - Class A; Aesthetics	Supported; Supported; Supported; Supported	Keystone Desktop
Polk	776.10	Unnamed Tributary to Platte River	Intermittent			ERM Desktop
Polk	777.29	Unnamed Tributary to Platte River	Intermittent			ERM Desktop
Polk	784.69	Unnamed Tributary to Prairie Creek	Intermittent			ERM Desktop
Polk	785.58	Prairie Creek	Intermittent			ERM Desktop
Polk	788.91	Big Blue River	Intermittent	Warm Water Aquatic Life (Class B); Agricultural Water Supply - Class A; Aesthetics	Impaired; Supported; Supported	ERM Desktop
York	790.60	Unnamed Tributary to Big Blue River	Intermittent			ERM Desktop
York	791.97	Coon Branch	Intermittent			ERM Desktop
York	792.71		Intermittent			Keystone Desktop
York	793.07		Intermittent			Keystone Desktop
York	795.08	Unnamed Tributary to Lincoln Creek	Intermittent			ERM Desktop
York	796.05	Unnamed Tributary to Lincoln Creek	Intermittent			ERM Desktop
York	798.09	Lincoln Creek	Intermittent	Warm Water Aquatic Life (Class B); Agricultural Water Supply - Class A; Aesthetics	Impaired; Not Assessed; Not Assessed	ERM Desktop
York	799.03	Unnamed Tributary to Lincoln Creek	Intermittent			ERM Desktop
York	801.18	Unnamed Tributary to Beaver Creek	Intermittent			ERM Desktop
York	803.35	Beaver Creek	Perennial	Warm Water Aquatic Life (Class B); Agricultural Water Supply - Class A; Aesthetics	Impaired; Not Assessed; Not Assessed	Keystone Survey
York	803.79	Unnamed Tributary to Beaver Creek	Intermittent			ERM Desktop
York	805.25		Man Made Ditch			Keystone Survey
York	805.62		Man Made Ditch			Keystone Survey
York	806.21	Unnamed	Man Made Ditch			Keystone Survey
York	807.19	Unnamed Tributary to West Fork Big Blue River	Intermittent			ERM Desktop
York	807.46	Unnamed Reservoir	Unknown Reservoir			ERM Desktop
York	807.86	Unnamed Tributary to West Fork Big Blue River	Intermittent			ERM Desktop
York	808.41	Unnamed Tributary to West Fork Big Blue River	Intermittent			ERM Desktop
York	809.41	Unnamed Tributary to West Fork Big Blue River	Intermittent			ERM Desktop
York	809.51	Unnamed Tributary to West Fork Big Blue River	Intermittent			ERM Survey
York	810.58	Unnamed Tributary to West Fork Big Blue River	Intermittent			Keystone Survey

Table 2 Waterbodies Crossed by the Project in Nebraska

County	Approximate Milepost	Waterbody Name [a]	Waterbody Type [b]	State Water Quality Classification [c]	Supports Use Designation [c]	Source of Information [b]
York	811.39	Unnamed Tributary to West Fork Big Blue River	Intermittent			Keystone Desktop
York	812.19	Unnamed Tributary to West Fork Big Blue River	Intermittent			ERM Desktop
York	812.83	West Fork Big Blue River	Perennial	Primary Contact Recreation; Warm Water Aquatic Life (Class A); Agricultural Water Supply - Class A; Aesthetics	Impaired; Impaired; Supported; Supported	Keystone Survey
York	813.10	Unnamed Tributary to West Fork Big Blue River	Intermittent			Keystone Desktop
York	813.11	Unnamed Lake/Pond	Lake/Pond			ERM Desktop
York	813.74	Unnamed Tributary to West Fork Big Blue River	Intermittent			ERM Desktop
York	814.55	Unnamed Tributary to West Fork Big Blue River	Intermittent			ERM Desktop
York	815.25	Unnamed Tributary to West Fork Big Blue River	Intermittent			ERM Desktop
Fillmore	818.31	Indian Creek	Intermittent			Keystone Survey
Fillmore	818.94	Unnamed Tributary to Indian Creek	Intermittent			ERM Desktop
Fillmore	819.85	Unnamed Tributary to Indian Creek	Intermittent			ERM Desktop
Fillmore	819.86	Unnamed Tributary to Indian Creek	Intermittent			ERM Desktop
Fillmore	822.68	Unnamed Tributary to Indian Creek	Man Made Ditch			Keystone Survey
Fillmore	824.79	Unnamed Tributary to Turkey Creek	Man Made Ditch			Keystone Desktop
Fillmore	825.81	Unnamed Tributary to Turkey Creek	Intermittent			ERM Desktop
Fillmore	825.99	Unnamed Tributary to Turkey Creek	Intermittent			ERM Desktop
Fillmore	826.00	Unnamed Tributary to Turkey Creek	Intermittent			ERM Desktop
Fillmore	826.23	Unnamed Tributary to Turkey Creek	Intermittent			ERM Desktop
Fillmore	827.71	Unnamed Tributary to Turkey Creek	Intermittent			ERM Desktop
Fillmore	828.41	Unnamed Tributary to Turkey Creek	Intermittent			ERM Desktop
Fillmore	829.62	Unnamed Tributary to Turkey Creek	Intermittent			ERM Desktop
Fillmore	830.56	Unnamed Tributary to Turkey Creek	Intermittent			ERM Desktop
Fillmore	830.77	Unnamed Tributary to Turkey Creek	Intermittent			ERM Desktop
Fillmore	831.79	Turkey Creek	Perennial	Warm Water Aquatic Life (Class B); Agricultural Water Supply - Class A; Aesthetics	Supported; Not Assessed; Not Assessed	Keystone Survey
Fillmore	832.15	Unnamed Tributary to Turkey Creek	Intermittent			ERM Desktop
Saline	832.82	Unnamed Tributary to Turkey Creek	Intermittent			ERM Desktop
Saline	833.33	Unnamed Tributary to Turkey Creek	Intermittent			Keystone Survey
Saline	835.32	Unnamed Tributary to Turkey Creek	Intermittent			ERM Desktop
Saline	836.43	Unnamed Tributary to North Fork Swan Creek	Intermittent			ERM Desktop
Saline	836.85	Unnamed Tributary to North Fork Swan Creek	Intermittent			ERM Desktop

Table 2 Waterbodies Crossed by the Project in Nebraska

County	Approximate Milepost	Waterbody Name [a]	Waterbody Type [b]	State Water Quality Classification [c]	Supports Use Designation [c]	Source of Information [b]
Saline	836.90	Unnamed Tributary to North Fork Swan Creek	Intermittent			ERM Desktop
Saline	837.46	Unnamed Tributary to North Fork Swan Creek	Intermittent			ERM Desktop
Saline	838.13	Unnamed Tributary to North Fork Swan Creek	Intermittent			ERM Desktop
Saline	838.38	Unnamed Tributary to North Fork Swan Creek	Intermittent			Keystone Survey
Saline	838.59	Unnamed Tributary to North Fork Swan Creek	Intermittent			Keystone Desktop
Saline	839.60	Unnamed Tributary to North Fork Swan Creek	Intermittent			ERM Desktop
Saline	840.33	Unnamed Tributary to North Fork Swan Creek	Intermittent			Keystone Desktop
Saline	840.72	Unnamed Tributary to South Fork Swan Creek	Intermittent			Keystone Desktop
Saline	842.60	Unnamed Tributary to South Fork Swan Creek	Intermittent			ERM Desktop
Saline	844.77	Unnamed Tributary to South Fork Swan Creek	Intermittent			ERM Desktop
Saline	846.25	Unnamed Tributary to South Fork Swan Creek	Intermittent			ERM Desktop
Jefferson	847.83	Unnamed Tributary to South Fork Swan Creek	Intermittent			ERM Desktop
Jefferson	848.38	South Fork Swan Creek	Intermittent	Warm Water Aquatic Life (Class B); Agricultural Water Supply - Class A; Aesthetics	Supported; Not Assessed; Not Assessed	ERM Desktop
Jefferson	848.98	Unnamed Tributary to South Fork Swan Creek	Intermittent			ERM Desktop
Jefferson	849.44	Unnamed Tributary to South Fork Swan Creek	Intermittent			ERM Desktop
Jefferson	849.75	Unnamed Tributary to South Fork Swan Creek	Intermittent			ERM Desktop
Jefferson	849.76	Unnamed Pond	Pond			Keystone Desktop
Jefferson	850.51	Unnamed Tributary to South Fork Swan Creek	Intermittent			ERM Desktop
Jefferson	851.82	Unnamed Tributary to South Fork Swan Creek	Intermittent			ERM Desktop
Jefferson	853.05	Unnamed Tributary to South Fork Swan Creek	Intermittent			ERM Desktop
Jefferson	853.32	Unnamed Tributary to South Fork Swan Creek	Intermittent			ERM Desktop
Jefferson	855.17	Unnamed Tributary to Cub Creek	Intermittent			ERM Desktop
Jefferson	856.02	Unnamed Tributary to Cub Creek	Intermittent			ERM Desktop

Table 2 Waterbodies Crossed by the Project in Nebraska

County	Approximate Milepost	Waterbody Name [a]	Waterbody Type [b]	State Water Quality Classification [c]	Supports Use Designation [c]	Source of Information [b]
Jefferson	856.55	Unnamed Tributary to Cub Creek	Intermittent			ERM Desktop
Jefferson	856.57	Unnamed Tributary to Cub Creek	Intermittent			ERM Desktop
Jefferson	857.05	Unnamed Tributary to Cub Creek	Intermittent			ERM Desktop
Jefferson	857.74	Unnamed Tributary to Cub Creek	Intermittent			ERM Desktop
Jefferson	858.12	Unnamed Tributary to Cub Creek	Intermittent			ERM Desktop
Jefferson	859.13	Cub Creek	Intermittent	Warm Water Aquatic Life (Class A); Agricultural Water Supply - Class A; Aesthetics	Supported; Not Assessed; Not Assessed	ERM Desktop
Jefferson	860.16	Unnamed Tributary to Cub Creek	Intermittent			ERM Desktop
Jefferson	860.78	Unnamed Tributary to Cub Creek	Intermittent			Keystone Survey
Jefferson	861.29	Unnamed Tributary to Cub Creek	Intermittent			ERM Desktop
Jefferson	861.37	Unnamed Tributary to Cub Creek	Intermittent			ERM Desktop
Jefferson	862.45	Unnamed Tributary to Cub Creek	Intermittent			Keystone Desktop
Jefferson	862.60	Unnamed Tributary to Cub Creek	Intermittent			ERM Desktop
Jefferson	863.82	Unnamed Tributary to Big Indian Creek	Intermittent			ERM Desktop
Jefferson	864.42	Unnamed Tributary to Big Indian Creek	Intermittent			ERM Desktop
Jefferson	864.84	Unnamed Tributary to Big Indian Creek	Intermittent			ERM Desktop
Jefferson	865.15	Unnamed Tributary to Big Indian Creek	Intermittent			ERM Desktop
Jefferson	865.49	Unnamed Tributary to Big Indian Creek	Intermittent			ERM Desktop
Jefferson	866.85	Big Indian Creek	Intermittent			ERM Desktop
Jefferson	867.38	Unnamed Tributary to Big Indian Creek	Intermittent			ERM Desktop
Jefferson	868.44	Unnamed Tributary to Big Indian Creek	Intermittent			ERM Desktop
Jefferson	868.82	Unnamed Tributary to Big Indian Creek	Intermittent			Keystone Desktop
Jefferson	871.14	Unnamed Tributary to Big Indian Creek	Man Made Ditch			Keystone Desktop
Jefferson	871.16	Unnamed Tributary to Big Indian Creek	Man Made Ditch			Keystone Desktop
Jefferson	871.65	Unnamed Tributary to Big Indian Creek	Intermittent			ERM Desktop
Jefferson	872.22	Unnamed Tributary to Big Indian Creek	Man Made Ditch			Keystone Desktop
Jefferson	872.48	Unnamed Tributary to Big Indian Creek	Intermittent			Keystone Desktop
Jefferson	872.75	Unnamed Tributary to Big Indian Creek	Intermittent			ERM Desktop
Jefferson	873.52	Unnamed Tributary to Little Blue River	Intermittent			Keystone Survey
Jefferson	873.66	Unnamed Tributary to Little Blue River	Intermittent			Keystone Survey
Jefferson	874.16	Unnamed Tributary to Little Blue River	Intermittent			ERM Desktop
Jefferson	874.28	Unnamed Tributary to Little Blue River	Intermittent			ERM Desktop
Jefferson	875.13	Unnamed Tributary to Little Blue River	Intermittent			Keystone Survey

Table Notes:

a GIS data source for waterbody name is from the 2012 National Hydrography Dataset (NHD). Accessed on Sept. 17, 2012; ftp://nhdftp.usgs.gov/DataSets/Staged/States/FileGDB/HighResolution/.

b Waterbody type and source of information are based upon a hierarchy. The hierarchy is as follows: If there is only National Hydrography Dataset (NHD) then the source is ERM Desktop. If Keystone data from survey or desktop does not match NHD, then source is ERM Desktop. If Keystone desktop data matches NHD, then source is Keystone Desktop. If Keystone survey data matches NHD, then source is Keystone Survey. If there is only Keystone data, then source is either Keystone Survey or Keystone Desktop. Waterbody type is only classified into "intermittent" or "perennial" because NDEQ does not recognize "ephemeral" as a stream classification.

c Data source is Title 117 - Nebraska Surface Water Quality Standards, Nebraska Administrative Code, Nebraska Department of Environmental Quality, Revised Effective Date: April 1, 2012.

Table 3 Waterbodies Crossed by the Project in South Dakota

County	Approximate Milepost	Waterbody Name [a]	Waterbody Type [b]	State Water Quality Classification [c]	Supports Use Designation [c]	Source of Information [b]
Harding	286.62	Unnamed Tributary to Box Elder Creek	Intermittent			ERM Desktop
Harding	292.64	Shaw Creek	Perennial			ERM Desktop
Harding	293.60	Unnamed Tributary to Little Missouri River	Intermittent			ERM Desktop
Harding	295.04	Little Missouri River	Perennial	Fish/Wildlife Prop, Rec, Stock; Irrigation Waters; Limited Contact Recreation; Warmwater Semipermanent Fish Life	Full; Full; Full; Non	Keystone Survey
Harding	295.40	Unnamed Tributary to Little Missouri River	Intermittent			ERM Desktop
Harding	296.62	Unnamed Tributary to Kimble Creek	Intermittent			ERM Desktop
Harding	296.89	Unnamed Tributary to Kimble Creek	Intermittent			ERM Desktop
Harding	297.27	Unnamed Tributary to Kimble Creek	Intermittent			ERM Desktop
Harding	297.65	Unnamed Tributary to Kimble Creek	Intermittent			ERM Desktop
Harding	297.83	Unnamed Tributary to Kimble Creek	Intermittent			Keystone Desktop
Harding	297.89	Unnamed Tributary to Kimble Creek	Intermittent			Keystone Desktop
Harding	298.23	Unnamed Tributary to Kimble Creek	Intermittent			Keystone Desktop
Harding	298.41	Unnamed Tributary to Kimble Creek	Intermittent			ERM Desktop
Harding	298.87	Unnamed Tributary to Kimble Creek	Intermittent			Keystone Desktop
Harding	299.16	Unnamed Tributary to Kimble Creek	Intermittent			ERM Desktop
Harding	299.43	Unnamed Tributary to Kimble Creek	Intermittent			ERM Desktop
Harding	299.58	Unnamed Tributary to Kimble Creek	Intermittent			ERM Desktop
Harding	300.01	Unnamed Tributary to Kimble Creek	Intermittent			Keystone Survey
Harding	300.38	Kimble Creek	Perennial			ERM Desktop
Harding	302.96	Unnamed Tributary to Dry House Creek	Intermittent			ERM Desktop
Harding	303.16	Unnamed Tributary to Dry House Creek	Intermittent			Keystone Desktop
Harding	303.45	Unnamed Tributary to Dry House Creek	Perennial			ERM Desktop
Harding	304.79	Unnamed Tributary to Jones Creek	Intermittent			Keystone Desktop
Harding	305.19	Unnamed Tributary to Jones Creek	Intermittent			ERM Desktop
Harding	306.30	Unnamed Tributary to Jones Creek	Intermittent			Keystone Desktop
Harding	306.99	Unnamed Tributary to Jones Creek	Intermittent			Keystone Desktop
Harding	307.23	Unnamed Tributary to Jones Creek	Intermittent			Keystone Desktop
Harding	307.79	Unnamed Tributary to Jones Creek	Intermittent			Keystone Desktop
Harding	309.12	Unnamed Tributary to Jones Creek	Intermittent			Keystone Desktop
Harding	309.69	Unnamed Tributary to Jones Creek	Intermittent			ERM Desktop
Harding	311.24	Unnamed Tributary to Rush Creek	Intermittent			Keystone Desktop
Harding	311.32	Unnamed Tributary to Rush Creek	Intermittent			ERM Desktop
Harding	311.73	Unnamed Tributary to Rush Creek	Intermittent			ERM Desktop
Harding	312.70	Unnamed Tributary to Rush Creek	Intermittent			Keystone Survey
Harding	315.68	Unnamed Tributary to Rush Creek	Intermittent			ERM Desktop
Harding	316.24	Unnamed Tributary to Rush Creek	Intermittent			ERM Desktop
Harding	317.27	Unnamed Tributary to Rush Creek	Intermittent			ERM Desktop
Harding	318.16	Slick Creek	Intermittent			ERM Desktop
Harding	319.36	Unnamed Tributary to Slick Creek	Intermittent			ERM Desktop
Harding	320.06	Slick Creek	Intermittent			ERM Desktop
Harding	320.63	Unnamed Tributary to Slick Creek	Intermittent			ERM Desktop

Table 3 Waterbodies Crossed by the Project in South Dakota

County	Approximate Milepost	Waterbody Name [a]	Waterbody Type [b]	State Water Quality Classification [c]	Supports Use Designation [c]	Source of Information [b]
Harding	321.37	Unnamed Tributary to South Fork Grand River	Intermittent			Keystone Desktop
Harding	321.60	South Fork Grand River	Perennial	Fish/Wildlife Prop, Rec, Stock; Irrigation Waters; Limited Contact Recreation; Warmwater Semipermanent Fish Life	Full; Non; Full; Full	Keystone Survey
Harding	321.64	Unnamed Tributary to South Fork Grand River	Intermittent			Keystone Desktop
Harding	326.38	Clarks Fork Creek	Perennial	Warmwater Marginal Fish Life Propagation Waters, Limited Contact Recreation Waters	Not Assessed	Keystone Survey
Harding	327.95	Unnamed Tributary to Clarks Fork Creek	Intermittent			ERM Desktop
Harding	328.48	Unnamed Tributary to Clarks Fork Creek	Intermittent			ERM Desktop
Harding	332.25	West Squaw Creek	Intermittent			Keystone Desktop
Harding	332.39	Double X Creek	Intermittent			ERM Desktop
Harding	332.68	Unnamed Tributary to Double X Creek	Intermittent			ERM Desktop
Harding	333.95	Unnamed Tributary to Double X Creek	Intermittent			ERM Desktop
Harding	335.47	Unnamed Tributary to Double X Creek	Intermittent			ERM Desktop
Harding	337.37	Unnamed Tributary to Wolf Creek	Intermittent			ERM Desktop
Harding	338.78	Unnamed Tributary to Wolf Creek	Intermittent			Keystone Survey
Harding	339.20	Wolf Creek	Intermittent			Keystone Survey
Harding	340.78	Unnamed Tributary to Wolf Creek	Intermittent			Keystone Survey
Harding	343.06	Red Butte Creek	Intermittent			Keystone Desktop
Harding	344.02	Giannonatti Creek	Intermittent			Keystone Desktop
Harding	345.18	Unnamed Tributary to North Fork Moreau River	Intermittent			ERM Desktop
Harding	346.80	Little Cowboy Creek	Intermittent			ERM Desktop
Harding	347.11	Unnamed Tributary to Little Cowboy Creek	Intermittent			ERM Desktop
Harding	347.95	Unnamed Tributary to North Fork Moreau River	Intermittent			ERM Desktop
Harding	348.09	Unnamed Tributary to North Fork Moreau River	Intermittent			ERM Desktop
Harding	348.81	Unnamed Tributary to North Fork Moreau River	Intermittent			ERM Desktop
Harding	350.96	Unnamed Tributary to Spring Creek	Intermittent			ERM Desktop
Harding	351.77	Spring Creek	Intermittent			ERM Desktop
Harding	352.13	Unnamed Tributary to Spring Creek	Intermittent			ERM Desktop
Harding	352.39	Unnamed Tributary to Spring Creek	Intermittent			Keystone Desktop
Harding	352.89	Unnamed Tributary to Spring Creek	Intermittent			ERM Desktop
Harding	353.38	Unnamed Tributary to Spring Creek	Intermittent			ERM Desktop
Harding	353.68	Unnamed Tributary to Spring Creek	Intermittent			Keystone Desktop
Harding	354.90	Dry Creek	Intermittent			Keystone Desktop
Harding	355.48	Unnamed Tributary to Dry Creek	Intermittent			ERM Desktop

Table 3 Waterbodies Crossed by the Project in South Dakota

County	Approximate Milepost	Waterbody Name [a]	Waterbody Type [b]	State Water Quality Classification [c]	Supports Use Designation [c]	Source of Information [b]
Harding	356.19	Unnamed Tributary to North Fork Moreau River	Intermittent			ERM Desktop
Harding	356.33	Unnamed Tributary to North Fork Moreau River	Intermittent			ERM Desktop
Harding	357.14	Unnamed Tributary to North Fork Moreau River	Intermittent			ERM Desktop
Harding	357.99	Unnamed Tributary to North Fork Moreau River	Intermittent			ERM Desktop
Harding	358.07	Unnamed Tributary to North Fork Moreau River	Intermittent			Keystone Desktop
Butte	359.14	Unnamed Tributary to North Fork Moreau River	Intermittent			ERM Desktop
Butte	359.60	Unnamed Tributary to North Fork Moreau River	Intermittent			ERM Desktop
Butte	360.99	North Fork Moreau River	Perennial	Warmwater Marginal Fish Life Propagation Waters, Limited Contact Recreation Waters	Not Assessed	Keystone Survey
Butte	361.61	Unnamed Tributary to North Fork Moreau River	Intermittent			Keystone Survey
Butte	361.97	Unnamed Tributary to North Fork Moreau River	Intermittent			Keystone Desktop
Perkins	363.48	Unnamed Tributary to North Fork Moreau River	Intermittent			Keystone Desktop
Perkins	363.65	Unnamed Tributary to North Fork Moreau River	Intermittent			ERM Desktop
Perkins	363.67	Unnamed Tributary to North Fork Moreau River	Intermittent			ERM Desktop
Perkins	365.63	Unnamed Tributary to South Fork Moreau River	Intermittent			ERM Desktop
Perkins	366.34	Unnamed Tributary to South Fork Moreau River	Intermittent			ERM Desktop
	367.23	Unnamed Tributary to South Fork Moreau River	Intermittent			Keystone Desktop
Perkins	368.24	Unnamed Tributary to South Fork Moreau River	Intermittent			ERM Desktop
Perkins	368.91	South Fork Moreau River	Perennial	Fish/Wildlife Prop, Rec, Stock; Irrigation Waters; Limited Contact Recreation; Warmwater Marginal Fish Life	Non; Non; Full; Full	Keystone Survey
Perkins	370.57	Beverly Creek	Intermittent			ERM Desktop
Perkins	372.52	Unnamed Tributary to Beverly Creek	Intermittent			ERM Desktop
Meade	377.66	Unnamed Tributary to Big Cedar Creek	Intermittent			ERM Desktop
Meade	378.17	Unnamed Tributary to Big Cedar Creek	Intermittent			Keystone Desktop
Meade	378.45	Unnamed Tributary to Big Cedar Creek	Intermittent			ERM Desktop
Meade	378.88	Unnamed Tributary to Big Cedar Creek	Intermittent			Keystone Desktop

Table 3 Waterbodies Crossed by the Project in South Dakota

County	Approximate Milepost	Waterbody Name [a]	Waterbody Type [b]	State Water Quality Classification [c]	Supports Use Designation [c]	Source of Information [b]
Meade	379.45	Unnamed Tributary to Big Cedar Creek	Intermittent			ERM Desktop
Meade	380.13	Unnamed Tributary to West Branch Pine Creek	Intermittent			Keystone Desktop
Meade	380.77	Unnamed Tributary to West Branch Pine Creek	Intermittent			ERM Desktop
Meade	383.17	West Branch Pine Creek	Intermittent			Keystone Survey
Meade	387.83	Pine Creek	Perennial	Warmwater Marginal Fish Life Propagation Waters, Limited Contact Recreation Waters	Not Assessed	ERM Desktop
Meade	388.09	Unnamed Tributary to Pine Creek	Intermittent			ERM Desktop
Meade	388.56	Unnamed Tributary to Pine Creek	Intermittent			ERM Desktop
Meade	389.40	Unnamed Tributary to Pine Creek	Intermittent			ERM Desktop
Meade	390.47	Unnamed Tributary to Pine Creek	Intermittent			ERM Desktop
Meade	390.50	Unnamed Tributary to Pine Creek	Intermittent			ERM Desktop
Meade	390.52	Unnamed Tributary to Pine Creek	Intermittent			ERM Desktop
Meade	395.73	Unnamed Tributary to Pine Creek	Intermittent			ERM Desktop
Meade	396.34	Unnamed Tributary to Pine Creek	Intermittent			ERM Desktop
Meade	396.57	Unnamed Tributary to Pine Creek	Intermittent			ERM Desktop
Meade	397.24	Unnamed Tributary to Pine Creek	Intermittent			ERM Desktop
Meade	397.90	Unnamed Tributary to Pine Creek	Intermittent			ERM Desktop
Meade	398.05	Unnamed Tributary to Pine Creek	Intermittent			ERM Desktop
Meade	398.51	Unnamed Tributary to Pine Creek	Intermittent			ERM Desktop
Meade	398.82	Unnamed Tributary to Pine Creek	Intermittent			ERM Desktop
Meade	398.98	Unnamed Tributary to Pine Creek	Intermittent			ERM Desktop
Meade	399.08	Unnamed Tributary to Pine Creek	Intermittent			ERM Desktop
Meade	399.73	Unnamed Tributary to Pine Creek	Intermittent			ERM Desktop
Meade	399.90	Unnamed Tributary to Pine Creek	Intermittent			Keystone Desktop
Meade	400.05	Unnamed Tributary to Pine Creek	Intermittent			Keystone Desktop
Meade	400.25	Unnamed Tributary to Pine Creek	Intermittent			Keystone Desktop
Meade	400.93	Unnamed Tributary to Sulphur Creek	Intermittent			ERM Desktop
Meade	401.22	Unnamed Tributary to Sulphur Creek	Intermittent			ERM Desktop
Meade	401.66	Unnamed Tributary to Sulphur Creek	Intermittent			ERM Desktop
Meade	401.99	Unnamed Tributary to Sulphur Creek	Intermittent			ERM Desktop
Meade	402.21	Unnamed Tributary to Sulphur Creek	Intermittent			ERM Desktop
Meade	402.77	Unnamed Tributary to Sulphur Creek	Intermittent			ERM Desktop
Meade	403.35	Unnamed Tributary to Sulphur Creek	Intermittent			ERM Desktop
Meade	404.07	Sulphur Creek	Intermittent			ERM Desktop
Meade	404.52	Unnamed Tributary to Sulphur Creek	Intermittent			ERM Desktop
Meade	410.07	Unnamed Tributary to Cherry Creek	Intermittent			ERM Desktop
Meade	410.92	Unnamed Tributary to Cherry Creek	Intermittent			Keystone Survey
Meade	411.24	Unnamed Tributary to Cherry Creek	Intermittent			ERM Desktop
Meade	411.92	Unnamed Tributary to Cherry Creek	Intermittent			Keystone Survey
Meade	412.80	Unnamed Tributary to Red Owl Creek	Intermittent			Keystone Desktop
Meade	413.05	Cherry Creek	Intermittent			ERM Desktop

Table 3 Waterbodies Crossed by the Project in South Dakota

County	Approximate Milepost	Waterbody Name [a]	Waterbody Type [b]	State Water Quality Classification [c]	Supports Use Designation [c]	Source of Information [b]
Meade	413.81	Unnamed Tributary to Cherry Creek	Intermittent			ERM Desktop
Meade	423.87	Narcelle Creek	Intermittent			Keystone Desktop
Meade	424.04	West Branch Narcelle Creek	Intermittent			ERM Desktop
Meade	424.45	Unnamed Tributary to Narcelle Creek	Intermittent			ERM Desktop
Meade	425.47	Unnamed Tributary to Narcelle Creek	Intermittent			Keystone Desktop
Meade	426.32	Unnamed Tributary to Narcelle Creek	Intermittent			ERM Desktop
Meade	427.15	Unnamed Tributary to Narcelle Creek	Intermittent			ERM Desktop
Meade	427.73	Unnamed Tributary to Narcelle Creek	Intermittent			ERM Desktop
Meade	428.05	Narcelle Creek	Intermittent			ERM Desktop
Meade	428.12	Narcelle Creek	Perennial			Keystone Desktop
Meade	428.19	Unnamed Tributary to Narcelle Creek	Intermittent			ERM Desktop
Meade	428.21	Unnamed Tributary to Narcelle Creek	Intermittent			ERM Desktop
Meade	429.16	Negro Creek	Intermittent			Keystone Desktop
Meade	429.63	Narcelle Creek	Intermittent			ERM Desktop
Meade	429.95	Cheyenne River Side Channel	Intermittent			ERM Desktop
Meade	430.06	Cheyenne River	Perennial	Fish/Wildlife Prop, Rec, Stock; Immersion Recreation; Irrigation Waters; Limited Contact Recreation; Warmwater Permanent Fish Life	Full; Non; Full; Non; Non	Keystone Desktop
Pennington	430.20	Cheyenne River Side Channel	Intermittent			ERM Desktop
Pennington	430.35	Cheyenne River Side Channel	Intermittent			ERM Desktop
Pennington	430.83	Ash Creek	Intermittent			Keystone Desktop
Haakon	433.58	Bridger Creek	Intermittent			ERM Desktop
Haakon	440.43	Unnamed Tributary to Bridger Creek	Intermittent			ERM Desktop
Haakon	441.34	Unnamed Tributary to Bridger Creek	Intermittent			ERM Desktop
Haakon	441.81	Unnamed Tributary to Bridger Creek	Intermittent			ERM Desktop
Haakon	441.99	Unnamed Tributary to Bridger Creek	Intermittent			ERM Desktop
Haakon	442.59	Unnamed Tributary to Bridger Creek	Intermittent			ERM Desktop
Haakon	443.12	Unnamed Tributary to Bridger Creek	Intermittent			ERM Desktop
Haakon	445.77	Unnamed Tributary to West Plum Creek	Intermittent			Keystone Desktop
Haakon	448.34	West Plum Creek	Intermittent			ERM Desktop
Haakon	448.45	Unnamed Tributary to West Plum Creek	Intermittent			Keystone Desktop
Haakon	449.67	Unnamed Tributary to West Plum Creek	Intermittent			Keystone Desktop
Haakon	452.87	Unnamed Tributary to West Plum Creek	Intermittent			ERM Desktop
Haakon	454.48	Unnamed Tributary to West Plum Creek	Intermittent			ERM Desktop
Haakon	455.34	Unnamed Tributary to West Plum Creek	Intermittent			ERM Desktop
Haakon	455.45	Unnamed Tributary to West Plum Creek	Intermittent			ERM Desktop
Haakon	456.15	Unnamed Tributary to Cottonwood Creek	Intermittent			ERM Desktop
Haakon	456.60	Unnamed Tributary to Cottonwood Creek	Intermittent			ERM Desktop
Haakon	457.12	Unnamed Tributary to Cottonwood Creek	Intermittent			ERM Desktop
Haakon	459.04	Unnamed Tributary to Buzzard Creek	Intermittent			ERM Desktop
Haakon	459.62	Unnamed Tributary to Buzzard Creek	Intermittent			Keystone Desktop
Haakon	459.80	Unnamed Tributary to Buzzard Creek	Intermittent			ERM Desktop

Table 3 Waterbodies Crossed by the Project in South Dakota

County	Approximate Milepost	Waterbody Name [a]	Waterbody Type [b]	State Water Quality Classification [c]	Supports Use Designation [c]	Source of Information [b]
Haakon	460.51	Unnamed Tributary to Buzzard Creek	Intermittent			ERM Desktop
Haakon	460.88	Unnamed Tributary to Buzzard Creek	Intermittent			ERM Desktop
Haakon	461.13	Unnamed Tributary to Buzzard Creek	Intermittent			ERM Desktop
Haakon	461.99	Unnamed Tributary to Buzzard Creek	Intermittent			ERM Desktop
Haakon	462.57	Unnamed Tributary to Buzzard Creek	Intermittent			ERM Desktop
Haakon	463.14	Unnamed Tributary to Buzzard Creek	Intermittent			ERM Desktop
Haakon	463.84	Unnamed Tributary to Witcher Holes Creek	Intermittent			ERM Desktop
Haakon	464.12	Unnamed Tributary to Witcher Holes Creek	Intermittent			ERM Desktop
Haakon	464.27	Unnamed Tributary to Witcher Holes Creek	Intermittent			ERM Desktop
Haakon	464.65	Unnamed Tributary to Witcher Holes Creek	Intermittent			ERM Desktop
Haakon	464.92	Unnamed Tributary to Witcher Holes Creek	Perennial/LakePond			ERM Desktop
Haakon	465.32	Witcher Holes Creek	Intermittent			ERM Desktop
Haakon	465.33	Witcher Holes Creek	Intermittent			ERM Desktop
Haakon	465.35	Witcher Holes Creek	Intermittent			ERM Desktop
Haakon	466.03	Unnamed Tributary to Witcher Holes Creek	Intermittent			ERM Desktop
Haakon	466.76	Unnamed Tributary to Witcher Holes Creek	Intermittent			ERM Desktop
Haakon	466.94	Unnamed Tributary to Witcher Holes Creek	Intermittent			ERM Desktop
Haakon	467.51	Unnamed Tributary to Witcher Holes Creek	Intermittent			ERM Desktop
Haakon	469.16	Unnamed Tributary to Sarah Laribee Creek	Intermittent			ERM Desktop
Haakon	469.18	Unnamed Tributary to Sarah Laribee Creek	Intermittent			ERM Desktop
Haakon	469.39	Sarah Laribee Creek	Perennial/LakePond			ERM Desktop
Haakon	469.40	Unnamed Tributary to Sarah Laribee Creek	Perennial/LakePond			ERM Desktop
Haakon	470.22	Unnamed Tributary to Sarah Laribee Creek	Intermittent			ERM Desktop
Haakon	470.96	Unnamed Tributary to Nowlin Creek	Intermittent			ERM Desktop
Haakon	472.82	Nowlin Creek	Intermittent			Keystone Desktop
Haakon	473.66	Unnamed Tributary to Nowlin Creek	Intermittent			ERM Desktop
Haakon	473.88	Unnamed Tributary to Nowlin Creek	Intermittent			ERM Desktop
Haakon	475.17	Mud Creek	Intermittent			ERM Desktop
Haakon	475.34	Unnamed Tributary to Mud Creek	Intermittent			ERM Desktop
Haakon	477.11	Jack Dailey Creek	Intermittent			ERM Desktop
Haakon	478.65	Unnamed Tributary to Jack Dailey Creek	Intermittent			Keystone Desktop
Haakon	479.19	Unnamed Tributary to Jack Dailey Creek	Intermittent			ERM Desktop
Haakon	479.91	Unnamed Tributary to Jack Dailey Creek	Intermittent			ERM Desktop
Haakon	483.70	Mitchell Creek	Intermittent			ERM Desktop
Haakon	485.29	Unnamed Tributary to Bad River	Intermittent			ERM Desktop
Haakon	485.32	Unnamed Tributary to Bad River	Intermittent			ERM Desktop
Haakon	485.96	Bad River	Perennial	Warmwater Marginal Fish Life Propagation Waters, Limited Contact Recreation Waters	Not Assessed	Keystone Survey
Haakon	486.37	Unnamed Tributary to Bad River	Intermittent			ERM Desktop
Haakon	487.34	Unnamed Tributary to Bad River	Intermittent			Keystone Desktop
Haakon	487.44	Unnamed Tributary to Bad River	Perennial/LakePond			ERM Desktop
Jones	490.10	Unnamed Tributary to South Creek	Intermittent			Keystone Desktop
Jones	491.14	South Creek	Intermittent			ERM Desktop

Table 3 Waterbodies Crossed by the Project in South Dakota

County	Approximate Milepost	Waterbody Name [a]	Waterbody Type [b]	State Water Quality Classification [c]	Supports Use Designation [c]	Source of Information [b]
Jones	491.26	Unnamed Tributary to South Creek	Intermittent			ERM Desktop
Jones	492.62	Unnamed Tributary to South Creek	Intermittent			ERM Desktop
Jones	492.67	Unnamed Tributary to South Creek	Intermittent			Keystone Desktop
Jones	492.84	Unnamed Tributary to South Creek	Intermittent			Keystone Desktop
Jones	493.44	Unnamed Tributary to South Creek	Intermittent			ERM Desktop
Jones	493.74	Unnamed Tributary to South Creek	Intermittent			ERM Desktop
Jones	494.75	Unnamed Tributary to South Creek	Intermittent			ERM Desktop
Jones	496.63	Unnamed Tributary to Dry Creek	Intermittent			Keystone Survey
Jones	496.85	Unnamed Tributary to Dry Creek	Intermittent			Keystone Desktop
Jones	497.21	Unnamed Tributary to Dry Creek	Intermittent			ERM Desktop
Jones	498.33	Dry Creek	Perennial			Keystone Survey
Jones	499.11	Unnamed Tributary to Dry Creek	Intermittent			ERM Desktop
Jones	501.22	Unnamed Tributary to Dry Creek	Intermittent			Keystone Desktop
Jones	501.83	Unnamed Tributary to Dry Creek	Intermittent			ERM Desktop
Jones	502.39	Unnamed Tributary to Dry Creek	Intermittent			ERM Desktop
Jones	503.35	Unnamed Tributary to Dry Creek	Intermittent			ERM Desktop
Jones	503.57	Unnamed Tributary to Dry Creek	Intermittent			ERM Desktop
Jones	505.37	Unnamed Tributary to White Clay Creek	Intermittent			ERM Desktop
Jones	506.17	White Clay Creek	Intermittent			Keystone Survey
Jones	506.83	Unnamed Tributary to White Clay Creek	Intermittent			ERM Desktop
Jones	507.37	Unnamed Tributary to White Clay Creek	Intermittent			ERM Desktop
Jones	508.07	Unnamed Tributary to White Clay Creek	Intermittent			ERM Desktop
Jones	509.07	Unnamed Tributary to White Clay Creek	Intermittent			ERM Desktop
Jones	509.88	Unnamed Tributary to White Clay Creek	Intermittent			Keystone Survey
Jones	509.89	Unnamed Tributary to White Clay Creek	Intermittent			Keystone Survey
Jones	509.90	Unnamed Tributary to White Clay Creek	Intermittent			Keystone Survey
Jones	510.03	Unnamed Tributary to White Clay Creek	Intermittent			ERM Desktop
Jones	510.60	Unnamed Tributary to East Branch White Clay Creek	Intermittent			ERM Desktop
Jones	511.25	East Branch White Clay Creek	Intermittent			ERM Desktop
Jones	511.33	Unnamed Tributary to East Branch White Clay Creek	Intermittent			Keystone Desktop
Jones	512.29	Unnamed Tributary to East Branch White Clay Creek	Intermittent			ERM Desktop
Jones	512.99	Unnamed Tributary to East Branch White Clay Creek	Intermittent			ERM Desktop
Jones	516.69	Unnamed Tributary to Medicine Creek	Intermittent			ERM Desktop
Jones	517.45	Unnamed Tributary to Bull Creek	Intermittent			Keystone Desktop
Jones	518.09	Unnamed Tributary to Bull Creek	Intermittent			Keystone Desktop
Jones	518.68	Unnamed Tributary to Bull Creek	Intermittent			Keystone Desktop
Jones	518.90	Unnamed Tributary to Bull Creek	Intermittent			ERM Desktop
Jones	518.94	Unnamed Tributary to Bull Creek	Intermittent			Keystone Desktop
Jones	519.52	Unnamed Tributary to Bull Creek	Intermittent			Keystone Desktop
Jones	521.73	Unnamed Tributary to Medicine Creek	Intermittent			Keystone Desktop

Table 3 Waterbodies Crossed by the Project in South Dakota

County	Approximate Milepost	Waterbody Name [a]	Waterbody Type [b]	State Water Quality Classification [c]	Supports Use Designation [c]	Source of Information [b]
Jones	522.56	Unnamed Tributary to Medicine Creek	Intermittent			ERM Desktop
Jones	523.27	Unnamed Tributary to Williams Creek	Intermittent			ERM Desktop
Jones	523.69	Unnamed Tributary to Williams Creek	Intermittent			Keystone Desktop
Jones	524.42	Unnamed Tributary to Williams Creek	Intermittent			ERM Desktop
Jones	524.87	Williams Creek	Intermittent	Fish/Wildlife Prop, Rec, Stock; Irrigation Waters	Ins; Ins	ERM Desktop
Jones	525.26	Unnamed Tributary to Williams Creek	Intermittent			ERM Desktop
Jones	526.60	Unnamed Tributary to Williams Creek	Intermittent			Keystone Desktop
Jones	527.99	Unnamed Tributary to Williams Creek	Intermittent			Keystone Desktop
Jones	528.04	Unnamed Tributary to Williams Creek	Intermittent			Keystone Desktop
Jones	528.07	Unnamed Tributary to Williams Creek	Intermittent			Keystone Desktop
Lyman	529.52	Unnamed Tributary to Williams Creek	Intermittent			ERM Desktop
Lyman	529.92	Unnamed Tributary to Williams Creek	Intermittent			ERM Desktop
Lyman	534.39	Sedlano Creek	Intermittent			Keystone Survey
Lyman	535.19	Unnamed Tributary to Sedlano Creek	Intermittent			Keystone Desktop
Lyman	537.48	Unnamed Tributary to Sedlano Creek	Intermittent			Keystone Desktop
Lyman	537.59	Unnamed Tributary to Sedlano Creek	Intermittent			ERM Desktop
Lyman	540.31	Unnamed Tributary to White River	Intermittent			Keystone Unknown Source
Lyman	540.54	Unnamed Tributary to White River	Intermittent			Keystone Unknown Source
Lyman	540.76	Unnamed Tributary to White River	Intermittent			Keystone Unknown Source
Tripp	541.31	White River	Perennial	Fish/Wildlife Prop, Rec, Stock; Irrigation Waters; Limited Contact Recreation; Warmwater Semipermanent Fish Life	Full; Full; Non; Full	Keystone Survey
Tripp	543.25	Unnamed Tributary to Little Dog Creek	Intermittent			ERM Desktop
Tripp	543.52	Little Dog Creek	Intermittent			ERM Desktop
Tripp	543.67	Unnamed Tributary to Little Dog Creek	Intermittent			ERM Desktop
Tripp	544.60	Unnamed Tributary to Little Dog Creek	Intermittent			ERM Desktop
Tripp	545.70	Unnamed Tributary to Cottonwood Creek	Intermittent			ERM Desktop
Tripp	546.13	Unnamed Tributary to Cottonwood Creek	Intermittent			Keystone Desktop
Tripp	546.56	Unnamed Tributary to Cottonwood Creek	Intermittent			ERM Desktop
Tripp	546.76	Unnamed Tributary to Cottonwood Creek	Intermittent			Keystone Desktop
Tripp	547.31	Cottonwood Creek	Perennial			ERM Desktop
Tripp	548.98	Unnamed Tributary to Cottonwood Creek	Intermittent			ERM Desktop
Tripp	549.49	Unnamed Tributary to Cottonwood Creek	Intermittent			ERM Desktop
Tripp	550.20	Unnamed Tributary to Cottonwood Creek	Intermittent			ERM Desktop
Tripp	550.87	Unnamed Tributary to Cottonwood Creek	Intermittent			ERM Desktop
Tripp	551.38	Unnamed Tributary to Owl Creek	Intermittent			ERM Desktop
Tripp	551.55	Unnamed Tributary to Owl Creek	Intermittent			ERM Desktop
Tripp	552.35	Unnamed Tributary to Owl Creek	Intermittent			Keystone Desktop
Tripp	552.49	Unnamed Tributary to Owl Creek	Intermittent			Keystone Desktop
Tripp	553.87	Unnamed Tributary to Owl Creek	Intermittent			Keystone Desktop
Tripp	554.43	Unnamed Tributary to Owl Creek	Intermittent			ERM Desktop
Tripp	555.68	Unnamed Tributary to Owl Creek	Intermittent			ERM Desktop

Table 3 Waterbodies Crossed by the Project in South Dakota

County	Approximate Milepost	Waterbody Name [a]	Waterbody Type [b]	State Water Quality Classification [c]	Supports Use Designation [c]	Source of Information [b]
Tripp	555.87	Unnamed Tributary to Owl Creek	Intermittent			ERM Desktop
Tripp	557.59	Unnamed Tributary to Owl Creek	Intermittent			ERM Desktop
Tripp	561.73	Unnamed Tributary to Owl Creek	Intermittent			ERM Desktop
Tripp	564.63	Hollow Creek	Intermittent			Keystone Desktop
Tripp	564.83	Unnamed Tributary to Hollow Creek	Intermittent			ERM Desktop
Tripp	565.03	Unnamed Tributary to Hollow Creek	Intermittent			ERM Desktop
Tripp	566.25	Unnamed Tributary to Dog Ear Creek	Intermittent			ERM Desktop
Tripp	567.04	Unnamed Tributary to Dog Ear Creek	Intermittent			ERM Desktop
Tripp	567.53	Unnamed Tributary to Dog Ear Creek	Intermittent			ERM Desktop
Tripp	567.63	Unnamed Tributary to Dog Ear Creek	Intermittent			ERM Desktop
Tripp	569.87	Unnamed Tributary to Dog Ear Creek	Intermittent			ERM Desktop
Tripp	570.17	Dog Ear Creek	Intermittent			Keystone Survey
Tripp	570.62	Mud Creek	Intermittent			Keystone Survey
Tripp	572.03	Unnamed Tributary to Mud Creek	Intermittent			ERM Desktop
Tripp	572.49	Unnamed Tributary to Mud Creek	Intermittent			ERM Desktop
Tripp	576.95	Sand Creek	Intermittent			Keystone Desktop
Tripp	580.89	Ponca Creek	Intermittent			ERM Desktop
Tripp	581.02	Unnamed Tributary to Ponca Creek	Intermittent			ERM Desktop
Tripp	581.07	Ponca Creek	Intermittent			Keystone Survey
Tripp	584.33	Unnamed Tributary to Ponca Creek	Intermittent			ERM Desktop
Tripp	584.48	Unnamed Tributary to Ponca Creek	Intermittent			ERM Desktop
Tripp	585.35	Unnamed Tributary to Ponca Creek	Intermittent			ERM Desktop
Tripp	592.75	Unnamed Tributary to Lute Creek	Intermittent			ERM Desktop
Tripp	593.45	Unnamed Tributary to Lute Creek	Intermittent			ERM Desktop
Tripp	595.35	Lute Creek	Intermittent			Keystone Survey
Tripp	596.40	Unnamed Tributary to Lute Creek	Intermittent			Keystone Desktop
Tripp	597.08	Unnamed Tributary to Buffalo Creek	Intermittent			Keystone Desktop
Tripp	597.22	Unnamed Tributary to Buffalo Creek	Intermittent			Keystone Desktop
Tripp	597.45	Unnamed Tributary to Buffalo Creek	Intermittent			Keystone Desktop
Tripp	597.68	Unnamed Tributary to Buffalo Creek	Intermittent			Keystone Desktop
Tripp	598.62	Unnamed Tributary to Buffalo Creek	Intermittent			ERM Desktop
Tripp	599.11	Unnamed Tributary to Buffalo Creek	Intermittent			ERM Desktop
Tripp	600.02	Buffalo Creek	Perennial			ERM Desktop
Tripp	600.87	Unnamed Tributary to Buffalo Creek	Intermittent			Keystone Desktop

Table Notes:

a GIS data source for waterbody name is from the 2012 National Hydrography Dataset (NHD). Accessed on Sept. 17, 2012; ftp://nhdftp.usgs.gov/DataSets/Staged/States/FileGDB/HighResolution/.

b Waterbody type and source of information are based upon a hierarchy. The hierarchy is as follows: If there is only National Hydrography Dataset (NHD) then the source is ERM Desktop. If Keystone data from survey or desktop does not match NHD, then source is ERM Desktop. If Keystone desktop data matches NHD, then source is Keystone Desktop. If Keystone survey data matches NHD, then source is Keystone Survey. If there is only Keystone data, then source is either Keystone Survey or Keystone Desktop. Keystone Unknown Source denotes Keystone-supplied data that is not sourced and not superseded by other data sources. Waterbody type is only classified into "intermittent" or "perennial" due to the constraints associated with making "ephemeral" stream classifications in this desktop review and to maintain consitancy with analysis for other waterbodies in this project.

c Data source is The 2012 South Dakota Integrated Report for Surface Water Quality Assessment prepared by the South Dakota Department of Environment and Natural Resources (DENR) pursuant to Sections 305(b), 303(d), and 314 of the Federal Water Pollution Control Act (P.L. 95-217).

Table 4 Impaired Waterbodies Crossed by the Project in Montana

Waterbody Name [a]	Use Class Description [b]	Use Attainment Assessment [c,d,e]				Parameters of Concern [b]
		AqL	AG	DW	Rec	
Middle Fork Prairie Elk Creek	Recreation; Warm Water Non-Salmonid Fishes and associated Aquatic Life; Agricultural/Industrial; Degradation Prohibited	P	nd	nd	X	Alteration in stream-side or littoral vegetative covers, Nitrogen (Total), Phosphorus (Total), Physical substrate habitat alterations, Total Kjehldahl Nitrogen (TKN)
East Fork Prairie Elk Creek	Recreation; Warm Water Non-Salmonid Fishes and associated Aquatic Life; Agricultural/Industrial; Degradation Prohibited	P	nd	nd	X	Alteration in stream-side or littoral vegetative covers, Nitrogen (Total), Phosphorus (Total), Physical substrate habitat alterations, Total Kjehldahl Nitrogen (TKN)
Missouri River	Drinking Water; Recreation; Cold Water Salmonid Fishes and associated Aquatic Life; Agricultural/Industrial	P	F	F	F	Alteration in stream-side or littoral vegetative covers, Other flow regime alterations, Temperature, water
Frenchman River	Drinking Water; Recreation; Warm Water Non-Salmonid Fishes and associated Aquatic Life; Agricultural/Industrial	P	P	F	P	Alteration in stream-side or littoral, vegetative covers, Chlorophyll-a, Low flow alterations
Milk River	Drinking Water; Recreation; Warm Water Non-Salmonid Fishes and associated Aquatic Life; Agricultural/Industrial	X	F	N	N	Escherichia coli, Lead, Mercury
Yellowstone River	Drinking Water; Recreation; Warm Water Non-Salmonid Fishes and associated Aquatic Life; Agricultural/Industrial	P	F	X	X	Fish-Passage Barrier
Buggy Creek	Drinking Water; Recreation; Warm Water Non-Salmonid Fishes and associated Aquatic Life; Agricultural/Industrial	P	F	F	F	Iron
Sandstone Creek	Recreation; Warm Water Non-Salmonid Fishes and associated Aquatic Life; Agricultural/Industrial; Degradation Prohibited	P	nd	nd	F	Nitrate/Nitrite (Nitrite + Nitrate as N), Nitrogen (Total)
Pennel Creek	Recreation; Warm Water Non-Salmonid Fishes and associated Aquatic Life; Agricultural/Industrial; Degradation Prohibited	P	nd	nd	F	Total Dissolved Solids

Table Notes:

a GIS data source for waterbody name is from the 2012 National Hydrography Dataset (NHD). Accessed on Sept. 17, 2012; ftp://nhdftp.usgs.gov/DataSets/Staged/States/FileGDB/HighResolution/.

b Montana 2012 Final Water Quality Integrated Report, Montana Department of Environmental Quality, Accessed on September 24, 2012, http://cwaic.mt.gov/wqrep/2012/2012Final_IR_Master.pdf, http://cwaic.mt.gov/wq_reps.aspx?yr=2012qryId=94544.

c Montana 2012 Final Water Quality Integrated Report, Montana Department of Environmental Quality, Accessed on September 24, 2012.

d AqL = Aquatic Life; AG = Agriculture; DW = Drinking Water; Rec = Recreation.

e F = Full Support; P = Partial Support; N = Not Supporting; I = Insufficient Information; nd = no data; X = Not Assessed.

Table 5 Impaired Waterbodies Crossed by the Project in Nebraska

Waterbody Name [a]	Designated Use [b]	Use Support/Attainment [b,c]	Impairment [c]
Keya Paha River	Primary Contact Recreation; Warm Water Aquatic Life (Class A); Agricultural Water Supply; Aesthetics	Impaired; Supported; Supported; Supported	Recreation - Bacteria
Niobrara River	Primary Contact Recreation; Warm Water Aquatic Life (Class A); Agricultural Water Supply; Aesthetics	Impaired; Supported; Supported; Supported	Recreation - Bacteria
Elkhorn River	Primary Contact Recreation; Warm Water Aquatic Life (Class A); Agricultural Water Supply; Aesthetics	Impaired; Supported; Supported; Supported	Recreation- Bacteria
Beaver Creek	Primary Contact Recreation; Warm Water Aquatic Life(Class A); Agricultural Water Supply - Class A; Aesthetics	Impaired; Impaired; Supported; Supported	Recreation- Bacteria
Loup River	Primary Contact Recreation; Warm Water Aquatic Life (Class A); Agricultural Water Supply - Class A; Aesthetics	Impaired; Supported; Supported; Supported	Recreation - Bacteria
Prairie Creek	Warm Water Aquatic Life (Class B); Agricultural Water Supply - Class A; Aesthetics	Impaired; Supported; Supported	Aquatic life - DO
Big Blue River	Warm Water Aquatic Life(Class B); Agricultural Water Supply - Class A; Aesthetics	Impaired; Supported; Supported	Aquatic life - DO, atrazine
Lincoln Creek	Warm Water Aquatic Life (Class B); Agricultural Water Supply - Class A; Aesthetics	Impaired; Not Assessed; Not Assessed	Aquatic life - impaired aquatic community
Beaver Creek	Warm Water Aquatic Life (Class B); Agricultural Water Supply - Class A; Aesthetics	Impaired; Not Assessed; Not Assessed	Aquatic life - impaired aquatic community
West Fork Big Blue River	Primary Contact Recreation; Warm Water Aquatic Life (Class A); Agricultural Water Supply - Class A; Aesthetics	Impaired; Impaired; Supported; Supported	Recreation - bacteria, aquatic life - May - June - atrazine, impaired aquatic community

Table Notes:

a GIS data source for waterbody name is from the 2012 National Hydrography Dataset (NHD). Accessed on Sept. 17, 2012; ftp://nhdftp.usgs.gov/DataSets/Staged/States/FileGDB/HighResolution/.

b Data source is Title 117 - Nebraska Surface Water Quality Standards, Nebraska Administrative Code, Nebraska Department of Environmental Quality, Revised Effective Date: April 1, 2012.

c 2012 Water Quality Integrated Report, Nebraska Department of Environmental Quality, Water Quality Division, April 1, 2012.

Table 6 Impaired Waterbodies Crossed by the Project in South Dakota

Waterbody Name [a]	Designated Use [b]	Use Support [b]	Cause [b]
Little Missouri River	Fish/Wildlife Propagation, Recreation; Stock; Irrigation Waters; Limited Contact Recreation; Warm water Semi permanent Fish Life	Full; Full; Full; Non	Not Assessed; Not Assessed; Not Assessed; Total Suspended Solids
South Fork Grand River	Fish/Wildlife Propagation, Recreation; Stock; Irrigation Waters; Limited Contact Recreation; Warm water Semi permanent Fish Life	Full; Non; Full; Full	Not Assessed; Salinity & Specific Conductance; Not Assessed; Not Assessed
South Fork Moreau River	Fish/Wildlife Propagation, Recreation; Stock; Irrigation Waters; Limited Contact Recreation; Warm water Marginal Fish Life	Non; Non; Full; Full	Not Assessed; Total Dissolved Solids, Specific Conductance; Not Assessed; Not Assessed
Cheyenne River	Fish/Wildlife Propagation, Recreation; Stock; Immersion Recreation; Irrigation Waters; Limited Contact Recreation; Warm water Permanent Fish Life	Full; Non; Full; Non; Non	Not Assessed, Escherichia Coli & Fecal Coliform, Not Assessed, Escherichia Coli & Fecal Coliform, Total Suspended Solids
White River	Fish/Wildlife Propagation, Recreation; Stock; Irrigation Waters; Limited Contact Recreation; Warm water Semi permanent Fish Life	Full; Full; Non; Full	Not Assessed, Not Assessed, Escherichia Coli

Table Notes:

a GIS data source for waterbody name is from the 2012 National Hydrography Dataset (NHD). Accessed on Sept. 17, 2012; ftp://nhdftp.usgs.gov/DataSets/Staged/States/FileGDB/HighResolution/.

b Data source is The 2012 South Dakota Integrated Report for Surface Water Quality Assessment prepared by the South Dakota Department of Environment and Natural Resources (DENR) pursuant to Sections 305(b), 303(d), and 314 of the Federal Water Pollution Control Act (P.L. 95-217). Full = Fully of Supporting Designated Use, Non = Non of Supporting Designated Use.

Table 7 Waterbodies within 10 Miles Downstream of Proposed Water Crossings in Montana

County	Approximate Milepost	Stream Crossing Name at Point of Crossing [a]	Downstream Waterbody Name [a]	Downstream Waterbody Size (acres) [a]
Phillips	1.11	Unnamed Tributary to East Fork Whitewater Creek	Unnamed	2.30
Phillips	2.81	Unnamed Tributary to East Fork Whitewater Creek	Unnamed	0.34
Phillips	5.45	Unnamed Tributary to East Fork Whitewater Creek	Unnamed	1.99
Phillips	5.94	Unnamed Tributary to East Fork Whitewater Creek	Unnamed	1.87
Phillips	5.94	Unnamed Tributary to East Fork Whitewater Creek	Unnamed	4.01
Phillips	6.51	Unnamed Tributary to East Fork Whitewater Creek	Unnamed	0.36
Phillips	6.51	Unnamed Tributary to East Fork Whitewater Creek	Unnamed	13.93
Phillips	9.05	Unnamed Tributary to East Fork Whitewater Creek	Unnamed	0.31
Phillips	9.05	Unnamed Tributary to East Fork Whitewater Creek	Unnamed	0.41
Phillips	9.05	Unnamed Tributary to East Fork Whitewater Creek	Unnamed	0.08
Phillips	9.05	Unnamed Tributary to East Fork Whitewater Creek	Unnamed	6.99
Phillips	9.12	Unnamed Tributary to East Fork Whitewater Creek	Unnamed	6.99
Phillips	9.12	Unnamed Tributary to East Fork Whitewater Creek	Unnamed	0.41
Phillips	9.12	Unnamed Tributary to East Fork Whitewater Creek	Unnamed	0.31
Phillips	9.12	Unnamed Tributary to East Fork Whitewater Creek	Unnamed	0.08
Phillips	9.59	Unnamed Tributary to East Fork Whitewater Creek	Unnamed	0.21
Phillips	9.59	Unnamed Tributary to East Fork Whitewater Creek	Unnamed	3.15
Phillips	9.59	Unnamed Tributary to East Fork Whitewater Creek	Unnamed	2.79
Phillips	9.59	Unnamed Tributary to East Fork Whitewater Creek	Unnamed	0.41
Phillips	9.59	Unnamed Tributary to East Fork Whitewater Creek	Unnamed	0.31
Phillips	9.59	Unnamed Tributary to East Fork Whitewater Creek	Unnamed	0.08
Phillips	10.37	Unnamed Tributary to East Fork Whitewater Creek	Unnamed	0.48
Phillips	10.37	Unnamed Tributary to East Fork Whitewater Creek	Unnamed	0.10
Phillips	10.37	Unnamed Tributary to East Fork Whitewater Creek	Unnamed	0.64
Phillips	10.37	Unnamed Tributary to East Fork Whitewater Creek	Unnamed	0.35
Phillips	10.37	Unnamed Tributary to East Fork Whitewater Creek	Unnamed	0.30
Phillips	10.37	Unnamed Tributary to East Fork Whitewater Creek	Unnamed	0.09
Phillips	10.37	Unnamed Tributary to East Fork Whitewater Creek	Schmittou Reservoir	1.71
Phillips	10.37	Unnamed Tributary to East Fork Whitewater Creek	Unnamed	2.53
Phillips	10.37	Unnamed Tributary to East Fork Whitewater Creek	Unnamed	0.04
Phillips	10.37	Unnamed Tributary to East Fork Whitewater Creek	Unnamed	0.13
Phillips	10.37	Unnamed Tributary to East Fork Whitewater Creek	Salsbery Reservoir	16.70
Phillips	10.72	Unnamed Tributary to East Fork Whitewater Creek	Unnamed	0.48
Phillips	10.72	Unnamed Tributary to East Fork Whitewater Creek	Unnamed	0.64
Phillips	10.72	Unnamed Tributary to East Fork Whitewater Creek	Unnamed	0.35
Phillips	10.72	Unnamed Tributary to East Fork Whitewater Creek	Unnamed	0.30
Phillips	10.72	Unnamed Tributary to East Fork Whitewater Creek	Unnamed	0.09
Phillips	10.72	Unnamed Tributary to East Fork Whitewater Creek	Schmittou Reservoir	1.71
Phillips	10.72	Unnamed Tributary to East Fork Whitewater Creek	Unnamed	2.53
Phillips	10.72	Unnamed Tributary to East Fork Whitewater Creek	Unnamed	0.04
Phillips	10.72	Unnamed Tributary to East Fork Whitewater Creek	Unnamed	0.13
Phillips	10.72	Unnamed Tributary to East Fork Whitewater Creek	Salsbery Reservoir	16.70
Phillips	11.26	East Fork Whitewater Creek	Unnamed	0.13
Phillips	11.26	East Fork Whitewater Creek	Unnamed	2.15
Phillips	11.26	East Fork Whitewater Creek	Unnamed	0.48
Phillips	11.26	East Fork Whitewater Creek	Unnamed	0.64
Phillips	11.26	East Fork Whitewater Creek	Unnamed	0.35
Phillips	11.26	East Fork Whitewater Creek	Unnamed	0.30

Table 7 Waterbodies within 10 Miles Downstream of Proposed Water Crossings in Montana

County	Approximate Milepost	Stream Crossing Name at Point of Crossing [a]	Downstream Waterbody Name [a]	Downstream Waterbody Size (acres) [a]
Phillips	11.26	East Fork Whitewater Creek	Unnamed	0.09
Phillips	11.26	East Fork Whitewater Creek	Schmittou Reservoir	1.71
Phillips	11.26	East Fork Whitewater Creek	Unnamed	2.53
Phillips	11.26	East Fork Whitewater Creek	Unnamed	0.04
Phillips	11.26	East Fork Whitewater Creek	Unnamed	0.13
Phillips	11.26	East Fork Whitewater Creek	Salsbery Reservoir	16.70
Phillips	11.67	Unnamed Tributary to Cottonwood Creek	Unnamed	1.42
Phillips	14.64	Unnamed Tributary to Cottonwood Creek	Unnamed	4.31
Phillips	15.17	Unnamed Tributary to Cottonwood Creek	Unnamed	6.66
Phillips	16.96	Unnamed Tributary to Cottonwood Creek	Unnamed	0.49
Phillips	17.89	Unnamed Tributary to Frenchman River	Unnamed	2.46
Phillips	17.92	Unnamed Tributary to Frenchman River	Unnamed	2.46
Phillips	18.09	Unnamed Tributary to Frenchman River	Unnamed	2.46
Phillips	18.35	Unnamed Tributary to Frenchman River	Unnamed	2.46
Phillips	18.98	Unnamed Tributary to Frenchman River	Unnamed	0.18
Phillips	19.18	Unnamed Tributary to Frenchman River	Unnamed	0.18
Phillips	22.15	Unnamed Tributary to Frenchman River	Unnamed	0.95
Phillips	22.32	Unnamed Tributary to Frenchman River	Unnamed	0.95
Valley	26.80	Unnamed Tributary to Frenchman River	Unnamed	1.92
Valley	26.80	Unnamed Tributary to Frenchman River	Unnamed	2.16
Valley	26.92	Unnamed Tributary to Frenchman River	Unnamed	5.55
Valley	26.92	Unnamed Tributary to Frenchman River	Unnamed	1.92
Valley	26.92	Unnamed Tributary to Frenchman River	Unnamed	2.16
Valley	27.02	Unnamed Tributary to Frenchman River	Unnamed	5.55
Valley	27.02	Unnamed Tributary to Frenchman River	Unnamed	1.92
Valley	27.02	Unnamed Tributary to Frenchman River	Unnamed	2.16
Valley	28.66	Unnamed Tributary to Frenchman River	Unnamed	2.47
Valley	32.26	Unnamed Tributary to East Fork Cash Creek	Unnamed	3.43
Valley	32.32	East Fork Cash Creek	Unnamed	3.43
Valley	32.49	Unnamed Tributary to East Fork Cash Creek	Unnamed	3.43
Valley	33.01	Unnamed Tributary to Papoose Creek	Unnamed	0.39
Valley	33.01	Unnamed Tributary to Papoose Creek	Unnamed	0.09
Valley	33.01	Unnamed Tributary to Papoose Creek	Unnamed	0.14
Valley	33.01	Unnamed Tributary to Papoose Creek	Unnamed	4.04
Valley	33.01	Unnamed Tributary to Papoose Creek	Unnamed	10.64
Valley	33.01	Unnamed Tributary to Papoose Creek	Unnamed	0.09
Valley	33.01	Unnamed Tributary to Papoose Creek	Unnamed	0.21
Valley	33.01	Unnamed Tributary to Papoose Creek	Unnamed	0.10
Valley	33.01	Unnamed Tributary to Papoose Creek	Unnamed	0.08
Valley	33.01	Unnamed Tributary to Papoose Creek	Unnamed	1.88
Valley	33.01	Unnamed Tributary to Papoose Creek	Unnamed	0.22
Valley	33.01	Unnamed Tributary to Papoose Creek	Unnamed	0.19
Valley	33.01	Unnamed Tributary to Papoose Creek	Unnamed	0.58
Valley	33.01	Unnamed Tributary to Papoose Creek	Unnamed	0.04
Valley	33.08	Unnamed Tributary to Papoose Creek	Unnamed	0.39
Valley	33.08	Unnamed Tributary to Papoose Creek	Unnamed	0.09
Valley	33.08	Unnamed Tributary to Papoose Creek	Unnamed	0.14
Valley	33.08	Unnamed Tributary to Papoose Creek	Unnamed	4.04
Valley	33.08	Unnamed Tributary to Papoose Creek	Unnamed	10.64

Table 7 Waterbodies within 10 Miles Downstream of Proposed Water Crossings in Montana

County	Approximate Milepost	Stream Crossing Name at Point of Crossing [a]	Downstream Waterbody Name [a]	Downstream Waterbody Size (acres) [a]
Valley	33.08	Unnamed Tributary to Papoose Creek	Unnamed	0.09
Valley	33.08	Unnamed Tributary to Papoose Creek	Unnamed	0.21
Valley	33.08	Unnamed Tributary to Papoose Creek	Unnamed	0.10
Valley	33.08	Unnamed Tributary to Papoose Creek	Unnamed	0.08
Valley	33.08	Unnamed Tributary to Papoose Creek	Unnamed	1.88
Valley	33.08	Unnamed Tributary to Papoose Creek	Unnamed	0.22
Valley	33.08	Unnamed Tributary to Papoose Creek	Unnamed	0.19
Valley	33.08	Unnamed Tributary to Papoose Creek	Unnamed	0.58
Valley	33.08	Unnamed Tributary to Papoose Creek	Unnamed	0.04
Valley	33.68	Unnamed Tributary to Papoose Creek	Unnamed	0.39
Valley	33.68	Unnamed Tributary to Papoose Creek	Unnamed	0.09
Valley	33.68	Unnamed Tributary to Papoose Creek	Unnamed	0.14
Valley	33.68	Unnamed Tributary to Papoose Creek	Unnamed	4.04
Valley	33.68	Unnamed Tributary to Papoose Creek	Unnamed	10.64
Valley	33.68	Unnamed Tributary to Papoose Creek	Unnamed	0.09
Valley	33.68	Unnamed Tributary to Papoose Creek	Unnamed	0.21
Valley	33.68	Unnamed Tributary to Papoose Creek	Unnamed	0.10
Valley	33.68	Unnamed Tributary to Papoose Creek	Unnamed	0.08
Valley	33.68	Unnamed Tributary to Papoose Creek	Unnamed	1.88
Valley	33.68	Unnamed Tributary to Papoose Creek	Unnamed	0.22
Valley	33.68	Unnamed Tributary to Papoose Creek	Unnamed	0.19
Valley	33.68	Unnamed Tributary to Papoose Creek	Unnamed	0.58
Valley	33.68	Unnamed Tributary to Papoose Creek	Unnamed	0.04
Valley	37.83	Unnamed Tributary to Papoose Creek	Unnamed	0.55
Valley	43.25	Unnamed Tributary to Lime Creek	Unnamed	0.26
Valley	43.25	Unnamed Tributary to Lime Creek	Unnamed	80.36
Valley	44.11	Unnamed Tributary to Lime Creek	Unnamed	2.64
Valley	44.21	Unnamed Tributary to Lime Creek	Unnamed	2.64
Valley	44.44	Unnamed Tributary to Lime Creek	Unnamed	2.64
Valley	47.18	Unnamed Tributary to Lime Creek	Unnamed	2.28
Valley	47.18	Unnamed Tributary to Lime Creek	Unnamed	0.04
Valley	47.18	Unnamed Tributary to Lime Creek	Unnamed	0.12
Valley	47.18	Unnamed Tributary to Lime Creek	Unnamed	0.60
Valley	47.81	Unnamed Tributary to Bear Creek	Unnamed	7.54
Valley	47.81	Unnamed Tributary to Bear Creek	Unnamed	2.08
Valley	49.83	Unnamed Tributary to Bear Creek	Unnamed	1.25
Valley	49.83	Unnamed Tributary to Bear Creek	Reservoir No. Four	7.80
Valley	59.38	Unnamed Tributary to Spring Creek	Unnamed	1.74
Valley	59.38	Unnamed Tributary to Spring Creek	Unnamed	1.74
Valley	59.90	Spring Creek	Unnamed	0.12
Valley	61.75	Unnamed Tributary to Milk River	Unnamed	0.10
Valley	61.75	Unnamed Tributary to Milk River	Unnamed	0.56
Valley	61.75	Unnamed Tributary to Milk River	Unnamed	0.14
Valley	61.75	Unnamed Tributary to Milk River	Unnamed	0.24
Valley	62.78	Unnamed Tributary to Milk River	Unnamed	0.56
Valley	62.78	Unnamed Tributary to Milk River	Unnamed	0.24
Valley	63.05	Unnamed Tributary to Milk River	Unnamed	1.97
Valley	63.05	Unnamed Tributary to Milk River	Unnamed	0.56
Valley	63.05	Unnamed Tributary to Milk River	Unnamed	0.24

Table 7 Waterbodies within 10 Miles Downstream of Proposed Water Crossings in Montana

County	Approximate Milepost	Stream Crossing Name at Point of Crossing [a]	Downstream Waterbody Name [a]	Downstream Waterbody Size (acres) [a]
Valley	64.41	Unnamed Tributary to Cherry Creek	Unnamed	0.74
Valley	64.41	Unnamed Tributary to Cherry Creek	Unnamed	0.74
Valley	64.41	Unnamed Tributary to Cherry Creek	Unnamed	0.74
Valley	65.51	Unnamed Tributary to Cherry Creek	Unnamed	0.25
Valley	65.51	Unnamed Tributary to Cherry Creek	Unnamed	0.58
Valley	65.51	Unnamed Tributary to Cherry Creek	Unnamed	0.25
Valley	65.51	Unnamed Tributary to Cherry Creek	Unnamed	0.25
Valley	65.78	Unnamed Tributary to Cherry Creek	Unnamed	0.19
Valley	65.78	Unnamed Tributary to Cherry Creek	Unnamed	0.58
Valley	65.78	Unnamed Tributary to Cherry Creek	Unnamed	0.19
Valley	65.78	Unnamed Tributary to Cherry Creek	Unnamed	0.19
Valley	69.06	Unnamed Tributary to East Fork Cherry Creek	Unnamed	0.37
Valley	69.49	Unnamed Tributary to East Fork Cherry Creek	Unnamed	0.37
Valley	70.04	Unnamed Tributary to East Fork Cherry Creek	Unnamed	0.37
Valley	71.81	East Fork Cherry Creek	Unnamed	0.37
Valley	71.86	Unnamed Tributary to East Fork Cherry Creek	Unnamed	0.37
Valley	72.29	Unnamed Tributary to East Fork Cherry Creek	Unnamed	0.37
Valley	73.66	Unnamed Tributary to Milk River	Unnamed	0.85
Valley	75.66	Unnamed Tributary to Milk River	Unnamed	3.60
Valley	80.16	Unnamed Tributary to Milk River	Unnamed	0.64
McCone	93.48	Unnamed Tributary to Missouri River	Unnamed	0.93
McCone	94.52	Unnamed Tributary to West Fork Lost Creek	Unnamed	0.25
McCone	94.52	Unnamed Tributary to West Fork Lost Creek	Unnamed	1.07
McCone	94.52	Unnamed Tributary to West Fork Lost Creek	Unnamed	1.12
McCone	94.52	Unnamed Tributary to West Fork Lost Creek	Unnamed	1.07
McCone	94.68	West Fork Lost Creek	Unnamed	0.21
McCone	94.68	West Fork Lost Creek	Unnamed	2.08
McCone	94.68	West Fork Lost Creek	Unnamed	1.12
McCone	94.68	West Fork Lost Creek	Unnamed	0.21
McCone	95.54	Unnamed Tributary to West Fork Lost Creek	Unnamed	1.07
McCone	95.54	Unnamed Tributary to West Fork Lost Creek	Unnamed	0.21
McCone	95.77	Unnamed Tributary to West Fork Lost Creek	Unnamed	1.07
McCone	95.77	Unnamed Tributary to West Fork Lost Creek	Unnamed	0.21
McCone	103.38	Unnamed Tributary to Bear Creek	Unnamed	0.70
McCone	103.44	Unnamed Tributary to Bear Creek	Unnamed	0.70
McCone	106.26	Bear Creek	Unnamed	3.43
McCone	106.54	Unnamed Tributary to Bear Creek	Unnamed	3.43
McCone	108.46	Unnamed Tributary to North Prong Shade Creek	Unnamed	5.78
McCone	108.85	Unnamed Tributary to North Prong Shade Creek	Unnamed	5.78
McCone	111.52	Unnamed Tributary to Shade Creek	Unnamed	1.18
McCone	111.61	Unnamed Tributary to Shade Creek	Unnamed	1.18
McCone	114.75	Unnamed Tributary to South Fork Shade Creek	Christianson	8.10
McCone	116.33	Unnamed Tributary to South Fork Shade Creek	Unnamed	9.29
McCone	117.21	Unnamed Tributary to South Fork Shade Creek	Unnamed	0.71
McCone	117.58	Unnamed Tributary to South Fork Shade Creek	Unnamed	0.47
McCone	117.58	Unnamed Tributary to South Fork Shade Creek	Unnamed	0.71
McCone	118.21	Unnamed Tributary to Ruff Creek	Unnamed	0.68
McCone	119.62	Flying V Creek	Unnamed	1.26
McCone	119.94	Unnamed Tributary to Flying V Creek	Unnamed	3.63
McCone	120.43	Unnamed Tributary to Flying V Creek	Unnamed	3.63

Table 7 Waterbodies within 10 Miles Downstream of Proposed Water Crossings in Montana

County	Approximate Milepost	Stream Crossing Name at Point of Crossing [a]	Downstream Waterbody Name [a]	Downstream Waterbody Size (acres) [a]
McCone	120.56	Unnamed Tributary to Flying V Creek	Unnamed	0.60
McCone	120.56	Unnamed Tributary to Flying V Creek	Unnamed	0.16
McCone	121.42	Unnamed Tributary to Flying V Creek	Unnamed	3.34
McCone	121.42	Unnamed Tributary to Flying V Creek	Unnamed	0.16
McCone	121.42	Unnamed Tributary to Flying V Creek	Unnamed	3.34
McCone	121.53	Unnamed Tributary to Flying V Creek	Unnamed	1.89
McCone	121.53	Unnamed Tributary to Flying V Creek	Unnamed	0.16
McCone	121.53	Unnamed Tributary to Flying V Creek	Unnamed	1.89
McCone	122.60	Unnamed Tributary to Figure Eight Creek	Unnamed	1.68
McCone	122.60	Unnamed Tributary to Figure Eight Creek	Unnamed	2.13
McCone	125.80	Unnamed Tributary to East Fork Prairie Elk Creek	Unnamed	2.42
McCone	125.85	Unnamed Tributary to East Fork Prairie Elk Creek	Unnamed	2.42
McCone	125.95	Unnamed Tributary to East Fork Prairie Elk Creek	Unnamed	2.42
McCone	126.41	Unnamed Tributary to East Fork Prairie Elk Creek	Unnamed	0.03
McCone	126.41	Unnamed Tributary to East Fork Prairie Elk Creek	Unnamed	0.18
McCone	126.41	Unnamed Tributary to East Fork Prairie Elk Creek	Unnamed	0.06
McCone	132.08	Unnamed Tributary to East Fork Prairie Elk Creek	Unnamed	0.11
McCone	132.08	Unnamed Tributary to East Fork Prairie Elk Creek	Unnamed	0.14
McCone	132.08	Unnamed Tributary to East Fork Prairie Elk Creek	Unnamed	0.12
McCone	132.13	Unnamed Tributary to East Fork Prairie Elk Creek	Unnamed	0.11
McCone	132.13	Unnamed Tributary to East Fork Prairie Elk Creek	Unnamed	0.14
McCone	132.13	Unnamed Tributary to East Fork Prairie Elk Creek	Unnamed	0.12
McCone	132.32	Unnamed Tributary to East Fork Prairie Elk Creek	Unnamed	0.11
McCone	132.32	Unnamed Tributary to East Fork Prairie Elk Creek	Unnamed	0.14
McCone	132.32	Unnamed Tributary to East Fork Prairie Elk Creek	Unnamed	0.12
McCone	134.09	Unnamed Tributary to Lost Creek	Unnamed	1.20
McCone	134.09	Unnamed Tributary to Lost Creek	Haynie Reservoir	8.19
McCone	134.09	Unnamed Tributary to Lost Creek	Unnamed	1.59
McCone	134.09	Unnamed Tributary to Lost Creek	Unnamed	0.57
McCone	134.09	Unnamed Tributary to Lost Creek	Unnamed	0.55
McCone	135.07	Unnamed Tributary to Lost Creek	Unnamed	1.59
McCone	135.56	Unnamed Tributary to Lost Creek	Unnamed	0.57
McCone	136.60	Unnamed Tributary to Lost Creek	Unnamed	0.56
McCone	142.64	Unnamed Tributary to Lost Creek	Unnamed	1.25
McCone	144.58	Unnamed Tributary to Redwater River	Unnamed	0.99
McCone	144.58	Unnamed Tributary to Redwater River	Unnamed	0.35
McCone	148.52	Redwater River	Unnamed	0.66
McCone	154.64	Unnamed Tributary to Cottonwood Creek	Unnamed	0.31
McCone	156.45	Unnamed Tributary to Cottonwood Creek	Unnamed	1.09
Dawson	163.55	Unnamed Tributary to Timber Fork	Unnamed	1.92
Dawson	165.51	Unnamed Tributary to Timber Fork	Unnamed	3.71
Dawson	165.74	Unnamed Tributary to Timber Fork	Unnamed	3.71
Dawson	168.09	Unnamed Tributary to Timber Fork	Lindsay Reservoir	31.65
Dawson	168.09	Unnamed Tributary to Timber Fork	Unnamed	1.76
Dawson	168.31	Unnamed Tributary to Timber Fork	Lindsay Reservoir	31.65
Dawson	168.31	Unnamed Tributary to Timber Fork	Unnamed	1.76
Dawson	168.54	Unnamed Tributary to Timber Fork	Lindsay Reservoir	31.65
Dawson	168.54	Unnamed Tributary to Timber Fork	Unnamed	1.76
Dawson	176.89	Unnamed Tributary to Clear Creek	Unnamed	0.43
Dawson	176.89	Unnamed Tributary to Clear Creek	Unnamed	9.86

Table 7 Waterbodies within 10 Miles Downstream of Proposed Water Crossings in Montana

County	Approximate Milepost	Stream Crossing Name at Point of Crossing [a]	Downstream Waterbody Name [a]	Downstream Waterbody Size (acres) [a]
Dawson	176.89	Unnamed Tributary to Clear Creek	Unnamed	0.15
Dawson	179.29	Unnamed Tributary to Clear Creek	Unnamed	0.57
Dawson	186.81	Unnamed Tributary to Yellowstone River	Unnamed	0.19
Dawson	187.13	Unnamed Tributary to Yellowstone River	Unnamed	0.19
Dawson	187.28	Unnamed Tributary to Yellowstone River	Unnamed	0.19
Dawson	187.38	Unnamed Tributary to Yellowstone River	Unnamed	0.19
Dawson	187.62	Unnamed Tributary to Yellowstone River	Unnamed	0.19
Dawson	187.69	Unnamed Tributary to Yellowstone River	Unnamed	0.19
Dawson	187.73	Unnamed Tributary to Yellowstone River	Unnamed	0.19
Dawson	191.09	Unnamed Tributary to Yellowstone River	Unnamed	0.17
Dawson	191.69	Unnamed Tributary to Yellowstone River	Unnamed	0.17
Prairie	207.24	Unnamed Tributary to Sand Butte Creek	Unnamed	0.65
Prairie	207.75	Unnamed Tributary to Sand Butte Creek	Unnamed	0.65
Prairie	213.54	Unnamed Tributary to McNancy Creek	Unnamed	1.66
Prairie	213.54	Unnamed Tributary to McNancy Creek	Unnamed	0.14
Prairie	213.54	Unnamed Tributary to McNancy Creek	Unnamed	0.12
Prairie	215.75	Unnamed Tributary to Cabin Creek	Unnamed	0.28
Fallon	221.98	Unnamed Tributary to Deer Creek	Unnamed	0.34
Fallon	228.63	Lawrence Creek	Unnamed	0.28
Fallon	228.63	Lawrence Creek	Unnamed	4.76
Fallon	228.63	Lawrence Creek	Unnamed	2.31
Fallon	228.93	Dry Fork Creek	Unnamed	0.28
Fallon	228.93	Dry Fork Creek	Unnamed	4.76
Fallon	228.93	Dry Fork Creek	Unnamed	2.31
Fallon	230.27	Unnamed Tributary to Dry Fork Creek	Unnamed	0.62
Fallon	230.62	Unnamed Tributary to Dry Fork Creek	Unnamed	0.62
Fallon	233.80	Unnamed Tributary to Pennel Creek	Unnamed	0.09
Fallon	233.80	Unnamed Tributary to Pennel Creek	Unnamed	0.24
Fallon	233.80	Unnamed Tributary to Pennel Creek	Unnamed	0.25
Fallon	233.80	Unnamed Tributary to Pennel Creek	Unnamed	3.64
Fallon	234.75	Unnamed Tributary to Pennel Creek	Unnamed	0.09
Fallon	234.75	Unnamed Tributary to Pennel Creek	Unnamed	0.24
Fallon	234.86	Unnamed Tributary to Pennel Creek	Unnamed	0.09
Fallon	234.86	Unnamed Tributary to Pennel Creek	Unnamed	0.24
Fallon	235.41	Pennel Creek	Unnamed	0.09
Fallon	235.41	Pennel Creek	Unnamed	0.24
Fallon	235.53	Unnamed Tributary to Pennel Creek	Unnamed	0.09
Fallon	235.53	Unnamed Tributary to Pennel Creek	Unnamed	0.24
Fallon	243.51	Unnamed Tributary to Sandstone Creek	Unnamed	1.93
Fallon	243.51	Unnamed Tributary to Sandstone Creek	Unnamed	0.91
Fallon	243.51	Unnamed Tributary to Sandstone Creek	Unnamed	4.79
Fallon	243.51	Unnamed Tributary to Sandstone Creek	Unnamed	8.26
Fallon	248.93	Unnamed Tributary to Red Butte Creek	Unnamed	0.17
Fallon	248.93	Unnamed Tributary to Red Butte Creek	Unnamed	49.85
Fallon	248.95	Unnamed Tributary to Red Butte Creek	Unnamed	0.17
Fallon	248.95	Unnamed Tributary to Red Butte Creek	Unnamed	49.85
Fallon	248.95	Unnamed Tributary to Red Butte Creek	Unnamed	0.17
Fallon	248.95	Unnamed Tributary to Red Butte Creek	Unnamed	49.85
Fallon	248.98	Red Butte Creek	Unnamed	0.17
Fallon	248.98	Red Butte Creek	Unnamed	49.85

Table 7 Waterbodies within 10 Miles Downstream of Proposed Water Crossings in Montana

County	Approximate Milepost	Stream Crossing Name at Point of Crossing [a]	Downstream Waterbody Name [a]	Downstream Waterbody Size (acres) [a]
Fallon	249.12	Unnamed Tributary to Red Butte Creek	Unnamed	0.17
Fallon	249.12	Unnamed Tributary to Red Butte Creek	Unnamed	49.85
Fallon	252.95	Unnamed Tributary to Red Butte Creek	Unnamed	1.89
Fallon	257.44	Unnamed Tributary to Little Beaver Creek	Unnamed	4.18
Fallon	257.44	Unnamed Tributary to Little Beaver Creek	Unnamed	10.57
Fallon	257.44	Unnamed Tributary to Little Beaver Creek	Unnamed	1.68
Fallon	257.44	Unnamed Tributary to Little Beaver Creek	Unnamed	2.90
Fallon	257.44	Unnamed Tributary to Little Beaver Creek	Unnamed	1.15
Fallon	258.07	Unnamed Tributary to Little Beaver Creek	Unnamed	2.90
Fallon	258.07	Unnamed Tributary to Little Beaver Creek	Unnamed	1.15
Fallon	270.36	Unnamed Tributary to Mud Creek	Unnamed	7.01
Fallon	270.36	Unnamed Tributary to Mud Creek	Unnamed	7.01
Fallon	270.74	Unnamed Tributary to Mud Creek	Unnamed	7.01
Fallon	271.43	Unnamed Tributary to Mud Creek	Unnamed	0.83
Fallon	271.43	Unnamed Tributary to Mud Creek	Unnamed	0.62
Fallon	271.43	Unnamed Tributary to Mud Creek	Unnamed	2.93
Fallon	274.95	Unnamed Tributary to Soda Creek	Unnamed	0.98
Fallon	275.09	Soda Creek	Unnamed	0.57
Fallon	275.12	Unnamed Tributary to Soda Creek	Unnamed	0.57
Fallon	275.75	Unnamed Tributary to Soda Creek	Unnamed	0.22
Fallon	275.75	Unnamed Tributary to Soda Creek	Unnamed	0.39
Fallon	275.75	Unnamed Tributary to Soda Creek	Unnamed	0.20
Fallon	275.75	Unnamed Tributary to Soda Creek	Unnamed	0.18
Fallon	276.25	Unnamed Tributary to Soda Creek	Unnamed	0.22
Fallon	276.25	Unnamed Tributary to Soda Creek	Unnamed	0.18
Fallon	276.25	Unnamed Tributary to Soda Creek	Unnamed	0.39
Fallon	276.77	Sheep Creek	Unnamed	0.51
Fallon	276.77	Sheep Creek	Unnamed	2.24

Table Notes:

[a] GIS data source for waterbody names and size is from the 2012 National Hydrography Dataset (NHD). Accessed on Sept. 17, 2012; ftp://nhdftp.usgs.gov/DataSets/Staged/States/FileGDB/HighResolution/.

Table 8 Waterbodies within 10 Miles Downstream of Proposed Water Crossings in Nebraska

County	Approximate Milepost	Stream Crossing Name at Point of Crossing [a]	Downstream Waterbody Name [a]	Downstream Waterbody Size (acres)[a]
Keya Paha	602.06	Unnamed Tributary to Buffalo Creek	Unnamed Reservoir	4.74
Keya Paha	604.36	Dry Creek	Unnamed Reservoir	6.29
Keya Paha	604.36	Dry Creek	Unnamed Reservoir	2.98
Keya Paha	604.36	Dry Creek	Unnamed Reservoir	0.41
Keya Paha	606.19	Unnamed Tributary to Indian Creek	Unnamed Reservoir	2.84
Keya Paha	607.41	Unnamed Tributary to Shingle Creek	Unnamed Reservoir	1.82
Keya Paha	612.22	Unnamed Tributary to Keya Paha River	Unnamed Reservoir	0.71
Keya Paha	612.22	Unnamed Tributary to Keya Paha River	Unnamed Reservoir	0.31
Keya Paha	613.73	Spotted Tail Creek	Unnamed Reservoir	1.80
Keya Paha	614.8	Unnamed Tributary to Dry Run Creek	Unnamed Reservoir	1.88
Keya Paha	615.13	Dry Run Creek	Unnamed Reservoir	1.88
Keya Paha	615.63	Unnamed Tributary to Alkali Creek	Unnamed Reservoir	0.35
Keya Paha	615.63	Unnamed Tributary to Alkali Creek	Unnamed Reservoir	1.17
Boyd	621.18	Big Creek	Unnamed Reservoir	0.61
Holt	628.02	Unnamed Tributary to Niobrara River	Allyn Reservoir	8.82
Holt	629.55	Unnamed Tributary to Niobrara River	Unnamed Reservoir	2.40
Holt	629.55	Unnamed Tributary to Niobrara River	Allyn Reservoir	8.82
Holt	639.96	Unnamed Tributary to Brush Creek	Unnamed Reservoir	3.02
Holt	640.28	Unnamed Tributary to Brush Creek	Unnamed Reservoir	3.02
Holt	640.93	Unnamed Tributary to Brush Creek	Unnamed Reservoir	3.02
Holt	641.2	Unnamed Tributary to Brush Creek	Unnamed Reservoir	3.02
Holt	641.97	Unnamed Tributary to Brush Creek	Unnamed Reservoir	1.40
Holt	641.97	Unnamed Tributary to Brush Creek	Unnamed Reservoir	0.09
Holt	642.5	Brush Creek	Unnamed Reservoir	1.13
Holt	642.5	Brush Creek	Unnamed Reservoir	3.77
Holt	650.69	Unnamed Tributary to Middle Branch Eagle Creek	Unnamed Reservoir	1.61
Holt	652.65	Unnamed Tributary to East Branch Eagle Creek	Unnamed Reservoir	0.84
Holt	652.79	Unnamed Tributary to East Branch Eagle Creek	Unnamed Reservoir	0.84
Holt	656.54	Honey Creek	Unnamed Reservoir	8.36
Holt	658.49	Unnamed Tributary to Blackbird Creek	Unnamed Reservoir	1.28
Holt	658.49	Unnamed Tributary to Blackbird Creek	Unnamed Reservoir	0.32
Holt	658.49	Unnamed Tributary to Blackbird Creek	Unnamed Reservoir	0.22
Holt	658.6	Blackbird Creek	Unnamed Reservoir	0.22
Holt	658.6	Blackbird Creek	Unnamed Reservoir	0.32
Holt	658.6	Blackbird Creek	Unnamed Reservoir	1.28
Holt	659.15	Unnamed Tributary to Blackbird Creek	Unnamed Reservoir	0.32
Holt	659.15	Unnamed Tributary to Blackbird Creek	Unnamed Reservoir	1.28
Holt	659.77	Unnamed Tributary to Blackbird Creek	Unnamed Reservoir	4.73
Holt	659.77	Unnamed Tributary to Blackbird Creek	Unnamed Reservoir	0.32
Holt	659.77	Unnamed Tributary to Blackbird Creek	Unnamed Reservoir	1.28
Holt	661.68	Unnamed Tributary to Redbird Creek	Unnamed Reservoir	3.65
Holt	661.96	Unnamed Tributary to Redbird Creek	Unnamed Reservoir	3.65
Holt	663.03	Redbird Creek	Unnamed Reservoir	7.45
Holt	663.71	Unnamed Tributary to Redbird Creek	Unnamed Reservoir	7.45
Holt	675.26	Middle Branch Verdigre Creek	Waterman Reservoir	8.84
Holt	675.96	Unnamed Tributary to Middle Branch Verdigre Creek	Waterman Reservoir	8.84
Holt	680.49	Unnamed Tributary to South Branch Verdigre Creek	Unnamed Reservoir	0.18
Holt	680.49	Unnamed Tributary to South Branch Verdigre Creek	Unnamed Reservoir	0.31
Holt	680.49	Unnamed Tributary to South Branch Verdigre Creek	Unnamed Reservoir	0.67
Antelope	681.36	Unnamed Tributary to South Branch Verdigre Creek	Unnamed Reservoir	0.17
Antelope	681.36	Unnamed Tributary to South Branch Verdigre Creek	Unnamed Reservoir	4.11
Antelope	684.81	Unnamed Tributary to Big Springs Creek	Unnamed Reservoir	1.04
Antelope	684.81	Unnamed Tributary to Big Springs Creek	Unnamed Reservoir	7.59
Antelope	684.81	Unnamed Tributary to Big Springs Creek	Unnamed Reservoir	1.45
Antelope	684.92	Unnamed Tributary to Big Springs Creek	Unnamed Reservoir	7.59
Antelope	684.92	Unnamed Tributary to Big Springs Creek	Unnamed Reservoir	1.04
Antelope	684.92	Unnamed Tributary to Big Springs Creek	Unnamed Reservoir	1.45
Antelope	685.09	Unnamed Tributary to Big Springs Creek	Unnamed Reservoir	7.59

Table 8 Waterbodies within 10 Miles Downstream of Proposed Water Crossings in Nebraska

County	Approximate Milepost	Stream Crossing Name at Point of Crossing [a]	Downstream Waterbody Name [a]	Downstream Waterbody Size (acres)[a]
Antelope	685.09	Unnamed Tributary to Big Springs Creek	Unnamed Reservoir	1.04
Antelope	685.09	Unnamed Tributary to Big Springs Creek	Unnamed Reservoir	1.45
Antelope	686.88	Unnamed Tributary to Hathoway Slough	Unnamed Reservoir	0.23
Antelope	686.88	Hathoway Slough	Unnamed Reservoir	1.27
Antelope	686.88	Hathoway Slough	Unnamed Reservoir	0.53
Antelope	687.62	Unnamed Tributary to Hathoway Slough	Unnamed Reservoir	0.53
Antelope	687.62	Unnamed Tributary to Hathoway Slough	Unnamed Reservoir	0.53
Antelope	687.62	Unnamed Tributary to Hathoway Slough	Unnamed Reservoir	1.27
Antelope	687.86	Hathoway Slough	Unnamed Reservoir	0.53
Antelope	687.86	Unnamed Tributary to Hathoway Slough	Unnamed Reservoir	1.27
Antelope	687.86	Unnamed Tributary to Hathoway Slough	Unnamed Reservoir	0.53
Antelope	709.4	Unnamed Tributary to Elkhorn River	Unnamed Reservoir	0.46
Boone	746.15	Unnamed Tributary to Beaver Creek	Unnamed Reservoir	2.78
Nance	761.89	Unnamed Tributary to Loup River	Unnamed Reservoir	0.23
Nance	761.89	Unnamed Tributary to Loup River	Unnamed Reservoir	1.20
Nance	761.89	Unnamed Tributary to Loup River	Unnamed Reservoir	1.73
Nance	762	Unnamed Tributary to Loup River	Unnamed Reservoir	6.37
Nance	762.21	Unnamed Tributary to Loup River	Unnamed Reservoir	6.37
Nance	762.82	Unnamed Tributary to Loup River	Unnamed Reservoir	1.12
Nance	763.48	Unnamed Tributary to Loup River	Unnamed Reservoir	0.72
Nance	763.66	Unnamed Tributary to Loup River	Unnamed Reservoir	1.02
Nance	763.66	Unnamed Tributary to Loup River	Unnamed Reservoir	0.72
Nance	764.05	Unnamed Tributary to Loup River	Unnamed Reservoir	0.99
Nance	764.05	Unnamed Tributary to Loup River	Unnamed Reservoir	0.72
Nance	764.05	Unnamed Tributary to Loup River	Unnamed Reservoir	1.02
Nance	765.32	Unnamed Tributary to Prairie Creek	Unnamed Reservoir	4.94
Nance	765.65	Unnamed Tributary to Prairie Creek	Unnamed Reservoir	0.92
Nance	765.65	Unnamed Tributary to Prairie Creek	Unnamed Reservoir	4.94
Merrick	770.05	Unnamed Tributary to Silver Creek	Unnamed Reservoir	14.08
Merrick	770.24	Unnamed Tributary to Silver Creek	Unnamed Reservoir	14.08
Merrick	771.53	Silver Creek	Unnamed Reservoir	14.08
Merrick	771.76	Unnamed Tributary to Silver Creek	Unnamed Reservoir	14.08
Merrick	772.25	Unnamed Tributary to Silver Creek	Unnamed Reservoir	14.08
Merrick	772.49	Unnamed Tributary to Silver Creek	Unnamed Reservoir	14.08
Merrick	773.35	Unnamed Tributary to Silver Creek	Unnamed Reservoir	14.08
Merrick	773.58	Unnamed Tributary to Silver Creek	Unnamed Reservoir	14.08
Merrick	774.59	Unnamed Tributary to Platte River	Unnamed Reservoir	0.95
Merrick	774.59	Unnamed Tributary to Platte River	Unnamed Reservoir	39.48
Merrick	774.59	Unnamed Tributary to Platte River	Unnamed Reservoir	11.93
Merrick	774.77	Unnamed Tributary to Platte River	Unnamed Reservoir	0.95
Merrick	774.77	Unnamed Tributary to Platte River	Unnamed Reservoir	39.48
Merrick	774.77	Unnamed Tributary to Platte River	Unnamed Reservoir	11.93
Merrick	774.9	Unnamed Tributary to Platte River	Unnamed Reservoir	0.95
Merrick	774.9	Unnamed Tributary to Platte River	Unnamed Reservoir	39.48
Merrick	774.9	Unnamed Tributary to Platte River	Unnamed Reservoir	11.93
Merrick	774.98	Unnamed Tributary to Platte River	Unnamed Reservoir	0.95
Merrick	774.98	Unnamed Tributary to Platte River	Unnamed Reservoir	39.48
Merrick	774.98	Unnamed Tributary to Platte River	Unnamed Reservoir	11.93
Merrick	775.04	Unnamed Tributary to Platte River	Unnamed Reservoir	0.95
Merrick	775.04	Unnamed Tributary to Platte River	Unnamed Reservoir	39.48
Merrick	775.04	Unnamed Tributary to Platte River	Unnamed Reservoir	11.93
Merrick	775.14	Platte River	Unnamed Reservoir	0.95
Merrick	775.14	Platte River	Unnamed Reservoir	39.48
Merrick	775.14	Platte River	Unnamed Reservoir	11.93
Merrick	775.34	Unnamed Tributary to Platte River	Unnamed Reservoir	0.95
Merrick	775.34	Unnamed Tributary to Platte River	Unnamed Reservoir	39.48
Merrick	775.34	Unnamed Tributary to Platte River	Unnamed Reservoir	11.93
Merrick	775.55	Unnamed Tributary to Platte River	Unnamed Reservoir	0.95

Table 8 Waterbodies within 10 Miles Downstream of Proposed Water Crossings in Nebraska

County	Approximate Milepost	Stream Crossing Name at Point of Crossing [a]	Downstream Waterbody Name [a]	Downstream Waterbody Size (acres)[a]
Merrick	775.55	Unnamed Tributary to Platte River	Unnamed Reservoir	39.48
Merrick	775.55	Unnamed Tributary to Platte River	Unnamed Reservoir	11.93
Polk	775.59	Unnamed Tributary to Platte River	Unnamed Reservoir	0.38
Merrick	775.59	Unnamed Tributary to Platte River	Unnamed Reservoir	0.95
Merrick	775.59	Unnamed Tributary to Platte River	Unnamed Reservoir	39.48
Merrick	775.59	Unnamed Tributary to Platte River	Unnamed Reservoir	11.93
York	791.97	Coon Branch	Unnamed Reservoir	0.44
York	801.18	Unnamed Tributary to Beaver Creek	Recharge Lake	23.19
York	801.18	Unnamed Tributary to Beaver Creek	Unnamed Reservoir	1.82
York	807.19	Unnamed Tributary to West Fork Big Blue River	Unnamed Reservoir	0.34
York	807.86	Unnamed Tributary to West Fork Big Blue River	Unnamed Reservoir	0.34
York	808.41	Unnamed Tributary to West Fork Big Blue River	Unnamed Reservoir	0.34
Fillmore	829.62	Unnamed Tributary to Turkey Creek	Unnamed Reservoir	1.57
Fillmore	829.62	Unnamed Tributary to Turkey Creek	Unnamed Reservoir	0.05
Fillmore	832.15	Unnamed Tributary to Turkey Creek	Unnamed Reservoir	2.27
Saline	832.81	Unnamed Tributary to Turkey Creek	Unnamed Reservoir	3.42
Saline	832.81	Unnamed Tributary to Turkey Creek	Unnamed Reservoir	37.17
Saline	833.33	Unnamed Tributary to Turkey Creek	Unnamed Reservoir	37.17
Saline	835.32	Unnamed Tributary to Turkey Creek	Unnamed Reservoir	37.17
Saline	836.43	Unnamed Tributary to North Fork Swan Creek	Unnamed Reservoir	0.86
Saline	837.46	Unnamed Tributary to North Fork Swan Creek	Unnamed Reservoir	1.98
Saline	838.13	Unnamed Tributary to North Fork Swan Creek	Unnamed Reservoir	87.96
Saline	838.38	Unnamed Tributary to North Fork Swan Creek	Unnamed Reservoir	87.96
Saline	838.59	Unnamed Tributary to North Fork Swan Creek	Unnamed Reservoir	87.96
Saline	839.6	Unnamed Tributary to North Fork Swan Creek	Unnamed Reservoir	87.96
Saline	844.77	Unnamed Tributary to South Fork Swan Creek	Unnamed Reservoir	33.13
Jefferson	848.98	Unnamed Tributary to South Fork Swan Creek	Unnamed Reservoir	3.12
Jefferson	849.43	Unnamed Tributary to South Fork Swan Creek	Unnamed Reservoir	3.12
Jefferson	849.76	Unnamed Tributary to South Fork Swan Creek	Unnamed Reservoir	1.55
Jefferson	849.76	Unnamed Tributary to South Fork Swan Creek	Unnamed Reservoir	0.47
Jefferson	850.51	Unnamed Tributary to South Fork Swan Creek	Unnamed Reservoir	8.17
Jefferson	856.02	Unnamed Tributary to Cub Creek	Cub Creek Reservoir 14-C	11.83
Jefferson	856.57	Unnamed Tributary to Cub Creek	Unnamed Reservoir	0.41
Jefferson	856.57	Unnamed Tributary to Cub Creek	Cub Creek Reservoir 14-C	11.83
Jefferson	862.6	Unnamed Tributary to Cub Creek	Cub Creek Reservoir 13-C	57.09
Jefferson	863.82	Unnamed Tributary to Big Indian Creek	Unnamed Reservoir	0.19
Jefferson	865.15	Unnamed Tributary to Big Indian Creek	Unnamed Reservoir	0.11
Jefferson	865.15	Unnamed Tributary to Big Indian Creek	Big Indian Creek Reservoir 10-A	48.33
Jefferson	865.49	Unnamed Tributary to Big Indian Creek	Big Indian Creek Reservoir 10-A	48.33
Jefferson	866.85	Unnamed Tributary to Big Indian Creek	Unnamed Reservoir	4.36
Jefferson	866.85	Unnamed Tributary to Big Indian Creek	Big Indian Creek Reservoir 10-A	48.33
Jefferson	871.14	Unnamed Tributary to Big Indian Creek	Big Indian Creek Reservoir 8-E	38.90
Jefferson	871.16	Unnamed Tributary to Big Indian Creek	Big Indian Creek Reservoir 8-E	38.90
Jefferson	872.22	Unnamed Tributary to Big Indian Creek	Unnamed Reservoir	1.55
Jefferson	872.22	Unnamed Tributary to Big Indian Creek	Big Indian Creek Reservoir 8-E	38.90
Jefferson	872.48	Unnamed Tributary to Big Indian Creek	Unnamed Reservoir	0.14
Jefferson	872.48	Unnamed Tributary to Big Indian Creek	Big Indian Creek Reservoir 8-E	38.90
Jefferson	872.75	Unnamed Tributary to Big Indian Creek	Big Indian Creek Reservoir 8-E	38.90

Table Notes:

[a] GIS data source for waterbody names and size is from the 2012 National Hydrography Dataset (NHD). Accessed on Sept. 17, 2012; ftp://nhdftp.usgs.gov/DataSets/Staged/States/FileGDB/HighResolution/.

Table 9 Waterbodies within 10 Miles Downstream of Proposed Water Crossings in South Dakota

County	Approximate Milepost	Stream Crossing Name at Point of Crossing [a]	Downstream Waterbody Name [a]	Downstream Waterbody Size (acres) [a]
Harding	295.40	Unnamed Tributary to Little Missouri River	Unnamed	7.90
Harding	296.62	Unnamed Tributary to Kimble Creek	Unnamed	1.13
Harding	297.65	Unnamed Tributary to Kimble Creek	Unnamed	0.27
Harding	298.41	Unnamed Tributary to Kimble Creek	Unnamed	0.27
Harding	299.16	Unnamed Tributary to Kimble Creek	Unnamed	1.03
Harding	299.16	Unnamed Tributary to Kimble Creek	Unnamed	0.27
Harding	299.16	Unnamed Tributary to Kimble Creek	Unnamed	0.22
Harding	299.43	Unnamed Tributary to Kimble Creek	Unnamed	0.27
Harding	299.43	Unnamed Tributary to Kimble Creek	Unnamed	0.22
Harding	299.58	Unnamed Tributary to Kimble Creek	Unnamed	0.27
Harding	299.58	Unnamed Tributary to Kimble Creek	Unnamed	0.22
Harding	300.01	Unnamed Tributary to Kimble Creek	Unnamed	0.27
Harding	300.01	Unnamed Tributary to Kimble Creek	Unnamed	0.22
Harding	300.38	Kimble Creek	Unnamed	1.19
Harding	300.38	Kimble Creek	Unnamed	0.27
Harding	300.38	Kimble Creek	Unnamed	0.22
Harding	302.96	Unnamed Tributary to Dry House Creek	Unnamed	9.62
Harding	302.96	Unnamed Tributary to Dry House Creek	Unnamed	5.39
Harding	302.96	Unnamed Tributary to Dry House Creek	Unnamed	1.79
Harding	302.96	Unnamed Tributary to Dry House Creek	Unnamed	1.69
Harding	302.96	Unnamed Tributary to Dry House Creek	Unnamed	0.14
Harding	303.45	Unnamed Tributary to Dry House Creek	Unnamed	9.62
Harding	303.45	Unnamed Tributary to Dry House Creek	Unnamed	5.39
Harding	303.45	Unnamed Tributary to Dry House Creek	Unnamed	1.79
Harding	303.45	Unnamed Tributary to Dry House Creek	Unnamed	1.69
Harding	303.45	Unnamed Tributary to Dry House Creek	Unnamed	0.14
Harding	309.69	Unnamed Tributary to Jones Creek	Unnamed	5.20
Harding	309.69	Unnamed Tributary to Jones Creek	Unnamed	0.98
Harding	309.69	Unnamed Tributary to Jones Creek	Unnamed	0.63
Harding	309.69	Unnamed Tributary to Jones Creek	Unnamed	0.63
Harding	309.69	Unnamed Tributary to Jones Creek	Unnamed	0.53
Harding	309.69	Unnamed Tributary to Jones Creek	Unnamed	0.50
Harding	309.69	Unnamed Tributary to Jones Creek	Unnamed	0.41
Harding	309.69	Unnamed Tributary to Jones Creek	Unnamed	0.19
Harding	311.32	Unnamed Tributary to Rush Creek	Lake Gardner	191.54
Harding	311.32	Unnamed Tributary to Rush Creek	Unnamed	11.53
Harding	311.32	Unnamed Tributary to Rush Creek	Unnamed	10.94
Harding	311.32	Unnamed Tributary to Rush Creek	Unnamed	1.93
Harding	311.32	Unnamed Tributary to Rush Creek	Unnamed	0.48
Harding	311.73	Unnamed Tributary to Rush Creek	Lake Gardner	191.54
Harding	311.73	Unnamed Tributary to Rush Creek	Unnamed	11.53
Harding	311.73	Unnamed Tributary to Rush Creek	Unnamed	10.94
Harding	311.73	Unnamed Tributary to Rush Creek	Unnamed	1.93
Harding	311.73	Unnamed Tributary to Rush Creek	Unnamed	0.48
Harding	312.70	Unnamed Tributary to Rush Creek	Lake Gardner	191.54
Harding	312.70	Unnamed Tributary to Rush Creek	Unnamed	11.53
Harding	312.70	Unnamed Tributary to Rush Creek	Unnamed	10.94
Harding	312.70	Unnamed Tributary to Rush Creek	Unnamed	1.93
Harding	312.70	Unnamed Tributary to Rush Creek	Unnamed	0.48
Harding	315.68	Unnamed Tributary to Rush Creek	Unnamed	3.26
Harding	316.24	Unnamed Tributary to Rush Creek	Unnamed	9.41
Harding	316.24	Unnamed Tributary to Rush Creek	Unnamed	3.26
Harding	317.27	Unnamed Tributary to Rush Creek	Unnamed	2.89

Table 9 Waterbodies within 10 Miles Downstream of Proposed Water Crossings in South Dakota

County	Approximate Milepost	Stream Crossing Name at Point of Crossing [a]	Downstream Waterbody Name [a]	Downstream Waterbody Size (acres) [a]
Harding	317.27	Unnamed Tributary to Rush Creek	Unnamed	1.31
Harding	317.27	Unnamed Tributary to Rush Creek	Unnamed	0.47
Harding	317.27	Unnamed Tributary to Rush Creek	Unnamed	0.41
Harding	320.06	Slick Creek	Unnamed	6.09
Harding	320.06	Slick Creek	Unnamed	2.47
Harding	320.63	Unnamed Tributary to Slick Creek	Unnamed	6.09
Harding	320.63	Unnamed Tributary to Slick Creek	Unnamed	2.78
Harding	332.39	Double X Creek	Unnamed	54.67
Harding	332.39	Double X Creek	Unnamed	2.01
Harding	332.39	Double X Creek	Unnamed	1.07
Harding	332.39	Double X Creek	Unnamed	1.07
Harding	332.39	Double X Creek	Unnamed	0.50
Harding	332.39	Double X Creek	Unnamed	0.08
Harding	333.95	Unnamed Tributary to Double X Creek	Unnamed	9.11
Harding	335.47	Unnamed Tributary to Double X Creek	Unnamed	13.12
Harding	337.37	Unnamed Tributary to Wolf Creek	Unnamed	3.88
Harding	338.78	Unnamed Tributary to Wolf Creek	Unnamed	0.55
Harding	338.78	Unnamed Tributary to Wolf Creek	Unnamed	0.47
Harding	338.78	Unnamed Tributary to Wolf Creek	Unnamed	0.34
Harding	338.78	Unnamed Tributary to Wolf Creek	Unnamed	0.34
Harding	338.78	Unnamed Tributary to Wolf Creek	Unnamed	0.32
Harding	338.78	Unnamed Tributary to Wolf Creek	Unnamed	0.30
Harding	338.78	Unnamed Tributary to Wolf Creek	Unnamed	0.30
Harding	338.78	Unnamed Tributary to Wolf Creek	Unnamed	0.23
Harding	338.78	Unnamed Tributary to Wolf Creek	Unnamed	0.20
Harding	338.78	Unnamed Tributary to Wolf Creek	Unnamed	0.19
Harding	338.78	Unnamed Tributary to Wolf Creek	Unnamed	0.11
Harding	338.78	Unnamed Tributary to Wolf Creek	Unnamed	0.10
Harding	338.78	Unnamed Tributary to Wolf Creek	Unnamed	0.10
Harding	339.20	Wolf Creek	Unnamed	0.55
Harding	339.20	Wolf Creek	Unnamed	0.47
Harding	339.20	Wolf Creek	Unnamed	0.34
Harding	339.20	Wolf Creek	Unnamed	0.34
Harding	339.20	Unnamed Tributary to Wolf Creek	Unnamed	0.32
Harding	339.20	Wolf Creek	Unnamed	0.30
Harding	339.20	Wolf Creek	Unnamed	0.30
Harding	339.20	Unnamed Tributary to Wolf Creek	Unnamed	0.23
Harding	339.20	Wolf Creek	Unnamed	0.20
Harding	339.20	Wolf Creek	Unnamed	0.19
Harding	339.20	Wolf Creek	Unnamed	0.11
Harding	339.20	Wolf Creek	Unnamed	0.10
Harding	339.20	Unnamed Tributary to Wolf Creek	Unnamed	0.10
Harding	340.78	Unnamed Tributary to Wolf Creek	Unnamed	0.55
Harding	340.78	Unnamed Tributary to Wolf Creek	Unnamed	0.47
Harding	340.78	Unnamed Tributary to Wolf Creek	Unnamed	0.34
Harding	340.78	Unnamed Tributary to Wolf Creek	Unnamed	0.32
Harding	340.78	Unnamed Tributary to Wolf Creek	Unnamed	0.30
Harding	340.78	Unnamed Tributary to Wolf Creek	Unnamed	0.30
Harding	340.78	Unnamed Tributary to Wolf Creek	Unnamed	0.30
Harding	340.78	Unnamed Tributary to Wolf Creek	Unnamed	0.23
Harding	340.78	Unnamed Tributary to Wolf Creek	Unnamed	0.20
Harding	340.78	Unnamed Tributary to Wolf Creek	Unnamed	0.19
Harding	340.78	Unnamed Tributary to Wolf Creek	Unnamed	0.11

Table 9 Waterbodies within 10 Miles Downstream of Proposed Water Crossings in South Dakota

County	Approximate Milepost	Stream Crossing Name at Point of Crossing [a]	Downstream Waterbody Name [a]	Downstream Waterbody Size (acres) [a]
Harding	340.78	Unnamed Tributary to Wolf Creek	Unnamed	0.10
Harding	340.78	Unnamed Tributary to Wolf Creek	Unnamed	0.10
Harding	343.06	Red Butte Creek	Unnamed	0.19
Harding	343.06	Red Butte Creek	Unnamed	0.19
Harding	346.80	Little Cowboy Creek	Unnamed	1.38
Harding	347.95	Unnamed Tributary to North Fork Moreau River	Unnamed	1.01
Harding	348.09	Unnamed Tributary to North Fork Moreau River	Unnamed	1.01
Harding	348.81	Unnamed Tributary to North Fork Moreau River	Unnamed	3.28
Harding	355.48	Unnamed Tributary to Dry Creek	Unnamed	2.28
Harding	356.19	Unnamed Tributary to North Fork Moreau River	Unnamed	3.10
Perkins	363.65	Unnamed Tributary to North Fork Moreau River	Unnamed	3.49
Perkins	363.67	Unnamed Tributary to North Fork Moreau River	Unnamed	3.49
Perkins	365.63	Unnamed Tributary to South Fork Moreau River	Unnamed	0.35
Perkins	365.63	Unnamed Tributary to South Fork Moreau River	Unnamed	0.30
Meade	378.17	Unnamed Tributary to Big Cedar Creek	Unnamed	0.98
Meade	378.45	Unnamed Tributary to Big Cedar Creek	Unnamed	0.42
Meade	380.77	Unnamed Tributary to West Branch Pine Creek	Unnamed	18.40
Meade	380.77	Unnamed Tributary to West Branch Pine Creek	Unnamed	5.84
Meade	380.77	Unnamed Tributary to West Branch Pine Creek	Unnamed	1.38
Meade	380.77	Unnamed Tributary to West Branch Pine Creek	Unnamed	0.80
Meade	383.17	West Branch Pine Creek	Unnamed	18.40
Meade	383.17	West Branch Pine Creek	Unnamed	1.38
Meade	383.17	West Branch Pine Creek	Unnamed	0.80
Meade	387.83	Pine Creek	Unnamed	1.38
Meade	388.09	Unnamed Tributary to West Branch Pine Creek	Unnamed	1.38
Meade	388.56	Unnamed Tributary to West Branch Pine Creek	Unnamed	1.38
Meade	389.40	Unnamed Tributary to Pine Creek	Unnamed	4.35
Meade	389.40	Unnamed Tributary to West Branch Pine Creek	Unnamed	1.38
Meade	390.47	Unnamed Tributary to Pine Creek	Unnamed	2.57
Meade	390.47	Unnamed Tributary to West Branch Pine Creek	Unnamed	1.38
Meade	390.47	Unnamed Tributary to Pine Creek	Unnamed	0.71
Meade	390.47	Unnamed Tributary to Pine Creek	Unnamed	0.39
Meade	390.47	Unnamed Tributary to Pine Creek	Unnamed	0.29
Meade	390.50	Unnamed Tributary to Pine Creek	Unnamed	2.57
Meade	390.50	Unnamed Tributary to West Branch Pine Creek	Unnamed	1.38
Meade	390.50	Unnamed Tributary to Pine Creek	Unnamed	0.71
Meade	390.50	Unnamed Tributary to Pine Creek	Unnamed	0.39
Meade	390.50	Unnamed Tributary to Pine Creek	Unnamed	0.29
Meade	390.52	Unnamed Tributary to Pine Creek	Unnamed	2.57
Meade	390.52	Unnamed Tributary to West Branch Pine Creek	Unnamed	1.38
Meade	390.52	Unnamed Tributary to Pine Creek	Unnamed	0.71
Meade	390.52	Unnamed Tributary to Pine Creek	Unnamed	0.39
Meade	390.52	Unnamed Tributary to Pine Creek	Unnamed	0.29
Meade	396.34	Unnamed Tributary to Pine Creek	Unnamed	2.20
Meade	396.34	Unnamed Tributary to Pine Creek	Unnamed	1.98
Meade	396.57	Unnamed Tributary to Pine Creek	Unnamed	2.20
Meade	396.57	Unnamed Tributary to Pine Creek	Unnamed	1.98
Meade	397.24	Unnamed Tributary to Pine Creek	Unnamed	1.95
Meade	397.90	Unnamed Tributary to Pine Creek	Unnamed	1.52
Meade	397.90	Unnamed Tributary to Pine Creek	Unnamed	0.77
Meade	398.05	Unnamed Tributary to Pine Creek	Unnamed	1.52
Meade	398.05	Unnamed Tributary to Pine Creek	Unnamed	0.77
Meade	398.51	Unnamed Tributary to Pine Creek	Unnamed	1.91

Table 9 Waterbodies within 10 Miles Downstream of Proposed Water Crossings in South Dakota

County	Approximate Milepost	Stream Crossing Name at Point of Crossing [a]	Downstream Waterbody Name [a]	Downstream Waterbody Size (acres) [a]
Meade	398.51	Unnamed Tributary to Pine Creek	Unnamed	0.19
Meade	398.82	Unnamed Tributary to Pine Creek	Unnamed	1.91
Meade	398.82	Unnamed Tributary to Pine Creek	Unnamed	0.63
Meade	398.82	Unnamed Tributary to Pine Creek	Unnamed	0.63
Meade	398.98	Unnamed Tributary to Pine Creek	Unnamed	1.91
Meade	400.93	Unnamed Tributary to Sulphur Creek	Unnamed	1.60
Meade	400.93	Unnamed Tributary to Sulphur Creek	Unnamed	0.77
Meade	401.22	Unnamed Tributary to Sulphur Creek	Unnamed	1.60
Meade	401.22	Unnamed Tributary to Sulphur Creek	Unnamed	0.77
Meade	401.66	Unnamed Tributary to Sulphur Creek	Unnamed	0.77
Meade	401.66	Unnamed Tributary to Sulphur Creek	Unnamed	0.67
Meade	401.99	Unnamed Tributary to Sulphur Creek	Unnamed	0.77
Meade	401.99	Unnamed Tributary to Sulphur Creek	Unnamed	0.67
Meade	402.21	Unnamed Tributary to Sulphur Creek	Unnamed	0.77
Meade	402.21	Unnamed Tributary to Sulphur Creek	Unnamed	0.67
Meade	402.77	Unnamed Tributary to Sulphur Creek	Unnamed	0.52
Meade	410.92	Unnamed Tributary to Cherry Creek	Unnamed	6.87
Meade	411.24	Unnamed Tributary to Cherry Creek	Unnamed	0.19
Haakon	440.43	Unnamed Tributary to Bridger Creek	Unnamed	10.11
Haakon	440.43	Unnamed Tributary to Bridger Creek	Unnamed	4.05
Haakon	440.43	Unnamed Tributary to Bridger Creek	Unnamed	2.43
Haakon	440.43	Unnamed Tributary to Bridger Creek	Unnamed	1.36
Haakon	440.43	Unnamed Tributary to Bridger Creek	Unnamed	0.32
Haakon	441.34	Unnamed Tributary to Bridger Creek	Unnamed	10.11
Haakon	441.34	Unnamed Tributary to Bridger Creek	Unnamed	4.05
Haakon	441.34	Unnamed Tributary to Bridger Creek	Unnamed	2.43
Haakon	441.34	Unnamed Tributary to Bridger Creek	Unnamed	1.36
Haakon	441.34	Unnamed Tributary to Bridger Creek	Unnamed	0.32
Haakon	441.81	Unnamed Tributary to Bridger Creek	Unnamed	10.11
Haakon	441.81	Unnamed Tributary to Bridger Creek	Unnamed	4.05
Haakon	441.81	Unnamed Tributary to Bridger Creek	Unnamed	2.43
Haakon	441.81	Unnamed Tributary to Bridger Creek	Unnamed	1.36
Haakon	441.81	Unnamed Tributary to Bridger Creek	Unnamed	0.32
Haakon	441.99	Unnamed Tributary to Bridger Creek	Unnamed	10.11
Haakon	441.99	Unnamed Tributary to Bridger Creek	Unnamed	4.16
Haakon	441.99	Unnamed Tributary to Bridger Creek	Unnamed	4.05
Haakon	441.99	Unnamed Tributary to Bridger Creek	Unnamed	2.43
Haakon	441.99	Unnamed Tributary to Bridger Creek	Unnamed	1.36
Haakon	441.99	Unnamed Tributary to Bridger Creek	Unnamed	0.32
Haakon	442.59	Unnamed Tributary to Bridger Creek	Unnamed	2.62
Haakon	442.59	Unnamed Tributary to Bridger Creek	Unnamed	1.52
Haakon	445.77	Unnamed Tributary to West Plum Creek	Unnamed	4.97
Haakon	449.67	Unnamed Tributary to West Plum Creek	Unnamed	2.33
Haakon	449.67	Unnamed Tributary to West Plum Creek	Unnamed	0.73
Haakon	452.87	Unnamed Tributary to West Plum Creek	Unnamed	19.86
Haakon	455.34	Unnamed Tributary to West Plum Creek	Unnamed	34.53
Haakon	455.34	Unnamed Tributary to West Plum Creek	Unnamed	0.31
Haakon	455.45	Unnamed Tributary to West Plum Creek	Unnamed	34.53
Haakon	455.45	Unnamed Tributary to West Plum Creek	Unnamed	0.31
Haakon	456.15	Unnamed Tributary to Cottonwood Creek	Unnamed	12.51
Haakon	456.15	Unnamed Tributary to Cottonwood Creek	Unnamed	5.62
Haakon	456.60	Unnamed Tributary to Cottonwood Creek	Unnamed	12.51
Haakon	456.60	Unnamed Tributary to Cottonwood Creek	Unnamed	5.62

Table 9 Waterbodies within 10 Miles Downstream of Proposed Water Crossings in South Dakota

County	Approximate Milepost	Stream Crossing Name at Point of Crossing [a]	Downstream Waterbody Name [a]	Downstream Waterbody Size (acres) [a]
Haakon	457.12	Unnamed Tributary to Cottonwood Creek	Unnamed	12.51
Haakon	459.04	Unnamed Tributary to Buzzard Creek	Unnamed	7.53
Haakon	459.04	Unnamed Tributary to Buzzard Creek	Unnamed	1.37
Haakon	459.04	Unnamed Tributary to Buzzard Creek	Unnamed	0.93
Haakon	459.04	Unnamed Tributary to Buzzard Creek	Unnamed	0.41
Haakon	459.04	Unnamed Tributary to Buzzard Creek	Unnamed	0.40
Haakon	459.04	Unnamed Tributary to Buzzard Creek	Unnamed	0.39
Haakon	459.04	Unnamed Tributary to Buzzard Creek	Unnamed	0.31
Haakon	459.04	Unnamed Tributary to Buzzard Creek	Unnamed	0.29
Haakon	459.04	Unnamed Tributary to Buzzard Creek	Unnamed	0.24
Haakon	459.04	Unnamed Tributary to Buzzard Creek	Unnamed	0.23
Haakon	459.04	Unnamed Tributary to Buzzard Creek	Unnamed	0.22
Haakon	459.04	Unnamed Tributary to Buzzard Creek	Unnamed	0.20
Haakon	459.80	Unnamed Tributary to Buzzard Creek	Unnamed	1.37
Haakon	459.80	Unnamed Tributary to Buzzard Creek	Unnamed	0.93
Haakon	459.80	Unnamed Tributary to Buzzard Creek	Unnamed	0.41
Haakon	459.80	Unnamed Tributary to Buzzard Creek	Unnamed	0.40
Haakon	459.80	Unnamed Tributary to Buzzard Creek	Unnamed	0.39
Haakon	459.80	Unnamed Tributary to Buzzard Creek	Unnamed	0.31
Haakon	459.80	Unnamed Tributary to Buzzard Creek	Unnamed	0.29
Haakon	459.80	Unnamed Tributary to Buzzard Creek	Unnamed	0.24
Haakon	459.80	Unnamed Tributary to Buzzard Creek	Unnamed	0.23
Haakon	459.80	Unnamed Tributary to Buzzard Creek	Unnamed	0.22
Haakon	459.80	Unnamed Tributary to Buzzard Creek	Unnamed	0.20
Haakon	460.51	Unnamed Tributary to Buzzard Creek	Unnamed	3.45
Haakon	460.51	Unnamed Tributary to Buzzard Creek	Unnamed	1.37
Haakon	460.51	Unnamed Tributary to Buzzard Creek	Unnamed	0.93
Haakon	460.51	Unnamed Tributary to Buzzard Creek	Unnamed	0.41
Haakon	460.51	Unnamed Tributary to Buzzard Creek	Unnamed	0.40
Haakon	460.51	Unnamed Tributary to Buzzard Creek	Unnamed	0.39
Haakon	460.51	Unnamed Tributary to Buzzard Creek	Unnamed	0.31
Haakon	460.51	Unnamed Tributary to Buzzard Creek	Unnamed	0.29
Haakon	460.51	Unnamed Tributary to Buzzard Creek	Unnamed	0.24
Haakon	460.51	Unnamed Tributary to Buzzard Creek	Unnamed	0.23
Haakon	460.51	Unnamed Tributary to Buzzard Creek	Unnamed	0.22
Haakon	460.51	Unnamed Tributary to Buzzard Creek	Unnamed	0.20
Haakon	460.88	Unnamed Tributary to Buzzard Creek	Unnamed	9.98
Haakon	460.88	Unnamed Tributary to Buzzard Creek	Unnamed	9.00
Haakon	460.88	Unnamed Tributary to Buzzard Creek	Unnamed	0.68
Haakon	460.88	Unnamed Tributary to Buzzard Creek	Unnamed	0.49
Haakon	460.88	Unnamed Tributary to Buzzard Creek	Unnamed	0.36
Haakon	460.88	Unnamed Tributary to Buzzard Creek	Unnamed	0.35
Haakon	460.88	Unnamed Tributary to Buzzard Creek	Unnamed	0.22
Haakon	461.13	Unnamed Tributary to Buzzard Creek	Unnamed	9.98
Haakon	461.13	Unnamed Tributary to Buzzard Creek	Unnamed	9.00
Haakon	461.13	Unnamed Tributary to Buzzard Creek	Unnamed	0.68
Haakon	461.13	Unnamed Tributary to Buzzard Creek	Unnamed	0.49
Haakon	461.13	Unnamed Tributary to Buzzard Creek	Unnamed	0.36
Haakon	461.13	Unnamed Tributary to Buzzard Creek	Unnamed	0.35
Haakon	461.13	Unnamed Tributary to Buzzard Creek	Unnamed	0.22
Haakon	461.99	Unnamed Tributary to Buzzard Creek	Unnamed	0.68
Haakon	461.99	Unnamed Tributary to Buzzard Creek	Unnamed	0.49
Haakon	461.99	Unnamed Tributary to Buzzard Creek	Unnamed	0.36

Table 9 Waterbodies within 10 Miles Downstream of Proposed Water Crossings in South Dakota

County	Approximate Milepost	Stream Crossing Name at Point of Crossing [a]	Downstream Waterbody Name [a]	Downstream Waterbody Size (acres) [a]
Haakon	461.99	Unnamed Tributary to Buzzard Creek	Unnamed	0.35
Haakon	461.99	Unnamed Tributary to Buzzard Creek	Unnamed	0.22
Haakon	462.57	Unnamed Tributary to Buzzard Creek	Unnamed	4.17
Haakon	462.57	Unnamed Tributary to Buzzard Creek	Unnamed	0.68
Haakon	462.57	Unnamed Tributary to Buzzard Creek	Unnamed	0.49
Haakon	462.57	Unnamed Tributary to Buzzard Creek	Unnamed	0.36
Haakon	462.57	Unnamed Tributary to Buzzard Creek	Unnamed	0.35
Haakon	462.57	Unnamed Tributary to Buzzard Creek	Unnamed	0.22
Haakon	463.14	Unnamed Tributary to Buzzard Creek	Unnamed	1.80
Haakon	463.14	Unnamed Tributary to Buzzard Creek	Unnamed	0.68
Haakon	463.14	Unnamed Tributary to Buzzard Creek	Unnamed	0.49
Haakon	463.14	Unnamed Tributary to Buzzard Creek	Unnamed	0.36
Haakon	463.14	Unnamed Tributary to Buzzard Creek	Unnamed	0.35
Haakon	463.14	Unnamed Tributary to Buzzard Creek	Unnamed	0.22
Haakon	464.12	Unnamed Tributary to Witcher Holes Creek	Unnamed	3.16
Haakon	464.27	Unnamed Tributary to Witcher Holes Creek	Unnamed	3.16
Haakon	464.65	Unnamed Tributary to Witcher Holes Creek	Unnamed	61.48
Haakon	464.65	Unnamed Tributary to Witcher Holes Creek	Unnamed	3.12
Haakon	464.65	Unnamed Tributary to Witcher Holes Creek	Unnamed	1.80
Haakon	464.65	Unnamed Tributary to Witcher Holes Creek	Unnamed	1.56
Haakon	464.65	Unnamed Tributary to Witcher Holes Creek	Unnamed	1.54
Haakon	464.65	Unnamed Tributary to Witcher Holes Creek	Unnamed	1.48
Haakon	464.65	Unnamed Tributary to Witcher Holes Creek	Unnamed	1.34
Haakon	464.65	Unnamed Tributary to Witcher Holes Creek	Unnamed	1.04
Haakon	464.65	Unnamed Tributary to Witcher Holes Creek	Unnamed	0.40
Haakon	464.65	Unnamed Tributary to Witcher Holes Creek	Unnamed	0.40
Haakon	464.92	Unnamed Tributary to Witcher Holes Creek	Unnamed	61.48
Haakon	464.92	Unnamed Tributary to Witcher Holes Creek	Unnamed	3.12
Haakon	464.92	Unnamed Tributary to Witcher Holes Creek	Unnamed	1.80
Haakon	464.92	Unnamed Tributary to Witcher Holes Creek	Unnamed	1.71
Haakon	464.92	Unnamed Tributary to Witcher Holes Creek	Unnamed	1.56
Haakon	464.92	Unnamed Tributary to Witcher Holes Creek	Unnamed	1.54
Haakon	464.92	Unnamed Tributary to Witcher Holes Creek	Unnamed	1.48
Haakon	464.92	Unnamed Tributary to Witcher Holes Creek	Unnamed	1.34
Haakon	464.92	Unnamed Tributary to Witcher Holes Creek	Unnamed	1.04
Haakon	464.92	Unnamed Tributary to Witcher Holes Creek	Unnamed	0.71
Haakon	464.92	Unnamed Tributary to Witcher Holes Creek	Unnamed	0.40
Haakon	464.92	Unnamed Tributary to Witcher Holes Creek	Unnamed	0.40
Haakon	464.92	Unnamed Tributary to Witcher Holes Creek	Unnamed	0.13
Haakon	465.32	Witcher Holes Creek	Unnamed	61.48
Haakon	465.32	Unnamed Tributary to Witcher Holes Creek	Unnamed	3.12
Haakon	465.32	Witcher Holes Creek	Unnamed	2.49
Haakon	465.32	Unnamed Tributary to Witcher Holes Creek	Unnamed	1.80
Haakon	465.32	Unnamed Tributary to Witcher Holes Creek	Unnamed	1.56
Haakon	465.32	Unnamed Tributary to Witcher Holes Creek	Unnamed	1.54
Haakon	465.32	Unnamed Tributary to Witcher Holes Creek	Unnamed	1.48
Haakon	465.32	Unnamed Tributary to Witcher Holes Creek	Unnamed	1.34
Haakon	465.32	Unnamed Tributary to Witcher Holes Creek	Unnamed	1.04
Haakon	465.32	Witcher Holes Creek	Unnamed	0.40
Haakon	465.32	Witcher Holes Creek	Unnamed	0.40
Haakon	465.33	Witcher Holes Creek	Unnamed	61.48
Haakon	465.33	Unnamed Tributary to Witcher Holes Creek	Unnamed	3.12
Haakon	465.33	Witcher Holes Creek	Unnamed	2.49

Table 9 Waterbodies within 10 Miles Downstream of Proposed Water Crossings in South Dakota

County	Approximate Milepost	Stream Crossing Name at Point of Crossing [a]	Downstream Waterbody Name [a]	Downstream Waterbody Size (acres) [a]
Haakon	465.33	Unnamed Tributary to Witcher Holes Creek	Unnamed	1.80
Haakon	465.33	Unnamed Tributary to Witcher Holes Creek	Unnamed	1.56
Haakon	465.33	Unnamed Tributary to Witcher Holes Creek	Unnamed	1.54
Haakon	465.33	Unnamed Tributary to Witcher Holes Creek	Unnamed	1.48
Haakon	465.33	Unnamed Tributary to Witcher Holes Creek	Unnamed	1.34
Haakon	465.33	Unnamed Tributary to Witcher Holes Creek	Unnamed	1.04
Haakon	465.33	Witcher Holes Creek	Unnamed	0.40
Haakon	465.33	Witcher Holes Creek	Unnamed	0.40
Haakon	465.35	Witcher Holes Creek	Unnamed	61.48
Haakon	465.35	Unnamed Tributary to Witcher Holes Creek	Unnamed	3.12
Haakon	465.35	Witcher Holes Creek	Unnamed	2.49
Haakon	465.35	Unnamed Tributary to Witcher Holes Creek	Unnamed	1.80
Haakon	465.35	Unnamed Tributary to Witcher Holes Creek	Unnamed	1.56
Haakon	465.35	Unnamed Tributary to Witcher Holes Creek	Unnamed	1.54
Haakon	465.35	Unnamed Tributary to Witcher Holes Creek	Unnamed	1.48
Haakon	465.35	Unnamed Tributary to Witcher Holes Creek	Unnamed	1.34
Haakon	465.35	Unnamed Tributary to Witcher Holes Creek	Unnamed	1.04
Haakon	465.35	Witcher Holes Creek	Unnamed	0.40
Haakon	465.35	Witcher Holes Creek	Unnamed	0.40
Haakon	466.03	Unnamed Tributary to Witcher Holes Creek	Unnamed	61.48
Haakon	466.03	Unnamed Tributary to Witcher Holes Creek	Unnamed	11.15
Haakon	466.03	Unnamed Tributary to Witcher Holes Creek	Unnamed	3.12
Haakon	466.03	Unnamed Tributary to Witcher Holes Creek	Unnamed	1.80
Haakon	466.03	Unnamed Tributary to Witcher Holes Creek	Unnamed	1.56
Haakon	466.03	Unnamed Tributary to Witcher Holes Creek	Unnamed	1.54
Haakon	466.03	Unnamed Tributary to Witcher Holes Creek	Unnamed	1.48
Haakon	466.03	Unnamed Tributary to Witcher Holes Creek	Unnamed	1.34
Haakon	466.03	Unnamed Tributary to Witcher Holes Creek	Unnamed	1.04
Haakon	466.03	Unnamed Tributary to Witcher Holes Creek	Unnamed	0.40
Haakon	466.03	Unnamed Tributary to Witcher Holes Creek	Unnamed	0.40
Haakon	466.76	Unnamed Tributary to Witcher Holes Creek	Unnamed	61.48
Haakon	466.76	Unnamed Tributary to Witcher Holes Creek	Unnamed	0.40
Haakon	466.76	Unnamed Tributary to Witcher Holes Creek	Unnamed	0.40
Haakon	466.94	Unnamed Tributary to Witcher Holes Creek	Unnamed	61.48
Haakon	466.94	Unnamed Tributary to Witcher Holes Creek	Unnamed	0.40
Haakon	466.94	Unnamed Tributary to Witcher Holes Creek	Unnamed	0.40
Haakon	467.51	Unnamed Tributary to Witcher Holes Creek	Unnamed	61.48
Haakon	467.51	Unnamed Tributary to Witcher Holes Creek	Unnamed	8.30
Haakon	467.51	Unnamed Tributary to Witcher Holes Creek	Unnamed	0.40
Haakon	467.51	Unnamed Tributary to Witcher Holes Creek	Unnamed	0.40
Haakon	469.16	Unnamed Tributary to Sarah Laribee Creek	Unnamed	20.25
Haakon	469.16	Sarah Laribee Creek	Unnamed	14.03
Haakon	469.18	Unnamed Tributary to Sarah Laribee Creek	Unnamed	20.25
Haakon	469.18	Unnamed Tributary to Sarah Laribee Creek	Unnamed	14.03
Haakon	469.39	Sarah Laribee Creek	Unnamed	20.25
Haakon	469.39	Sarah Laribee Creek	Unnamed	14.03
Haakon	469.40	Unnamed Tributary to Sarah Laribee Creek	Unnamed	20.25
Haakon	469.40	Unnamed Tributary to Sarah Laribee Creek	Unnamed	14.03
Haakon	470.22	Unnamed Tributary to Sarah Laribee Creek	Unnamed	20.25
Haakon	470.96	Unnamed Tributary to Nowlin Creek	Unnamed	11.60
Haakon	470.96	Unnamed Tributary to Nowlin Creek	Unnamed	1.36
Haakon	472.82	Nowlin Creek	Unnamed	1.21
Haakon	473.66	Unnamed Tributary to Nowlin Creek	Unnamed	0.88

Table 9 Waterbodies within 10 Miles Downstream of Proposed Water Crossings in South Dakota

County	Approximate Milepost	Stream Crossing Name at Point of Crossing [a]	Downstream Waterbody Name [a]	Downstream Waterbody Size (acres) [a]
Haakon	478.65	Unnamed Tributary to Jack Dailey Creek	Unnamed	0.21
Haakon	483.70	Mitchell Creek	Unnamed	2.26
Haakon	483.70	Mitchell Creek	Unnamed	1.48
Haakon	487.44	Unnamed Tributary to Bad River	Unnamed	0.33
Jones	492.62	Unnamed Tributary to South Creek	Unnamed	0.89
Jones	492.62	Unnamed Tributary to South Creek	Unnamed	0.48
Jones	492.67	Unnamed Tributary to South Creek	Unnamed	0.89
Jones	492.67	Unnamed Tributary to South Creek	Unnamed	0.48
Jones	492.84	Unnamed Tributary to South Creek	Unnamed	0.89
Jones	492.84	Unnamed Tributary to South Creek	Unnamed	0.48
Jones	493.44	Unnamed Tributary to South Creek	Unnamed	1.05
Jones	493.44	Unnamed Tributary to South Creek	Unnamed	0.34
Jones	493.74	Unnamed Tributary to South Creek	Unnamed	1.05
Jones	493.74	Unnamed Tributary to South Creek	Unnamed	0.34
Jones	494.75	Unnamed Tributary to South Creek	Unnamed	0.53
Jones	494.75	Unnamed Tributary to South Creek	Unnamed	0.42
Jones	496.63	Unnamed Tributary to Dry Creek	Unnamed	0.36
Jones	499.11	Unnamed Tributary to Dry Creek	Unnamed	2.62
Jones	501.22	Unnamed Tributary to Dry Creek	Unnamed	3.30
Jones	502.39	Unnamed Tributary to Dry Creek	Unnamed	0.37
Jones	503.35	Unnamed Tributary to Dry Creek	Unnamed	3.81
Jones	503.35	Unnamed Tributary to Dry Creek	Unnamed	3.81
Jones	503.35	Unnamed Tributary to Dry Creek	Unnamed	2.70
Jones	503.35	Unnamed Tributary to Dry Creek	Unnamed	0.31
Jones	503.57	Unnamed Tributary to Dry Creek	Unnamed	5.32
Jones	503.57	Unnamed Tributary to Dry Creek	Unnamed	1.32
Jones	505.37	Unnamed Tributary to White Clay Creek	Unnamed	0.45
Jones	506.17	White Clay Creek	Unnamed	3.10
Jones	506.17	White Clay Creek	Unnamed	2.27
Jones	506.17	White Clay Creek	Unnamed	1.59
Jones	506.17	White Clay Creek	Unnamed	1.49
Jones	506.17	White Clay Creek	Unnamed	0.20
Jones	506.17	White Clay Creek	Unnamed	0.17
Jones	506.83	Unnamed Tributary to White Clay Creek	Unnamed	3.10
Jones	506.83	Unnamed Tributary to White Clay Creek	Unnamed	2.27
Jones	506.83	Unnamed Tributary to White Clay Creek	Unnamed	1.59
Jones	506.83	Unnamed Tributary to White Clay Creek	Unnamed	1.52
Jones	506.83	Unnamed Tributary to White Clay Creek	Unnamed	1.49
Jones	506.83	Unnamed Tributary to White Clay Creek	Unnamed	0.20
Jones	506.83	Unnamed Tributary to White Clay Creek	Unnamed	0.17
Jones	507.37	Unnamed Tributary to White Clay Creek	Unnamed	3.10
Jones	507.37	Unnamed Tributary to White Clay Creek	Unnamed	2.27
Jones	507.37	Unnamed Tributary to White Clay Creek	Unnamed	1.59
Jones	507.37	Unnamed Tributary to White Clay Creek	Unnamed	1.49
Jones	507.37	Unnamed Tributary to White Clay Creek	Unnamed	0.98
Jones	507.37	Unnamed Tributary to White Clay Creek	Unnamed	0.20
Jones	507.37	Unnamed Tributary to White Clay Creek	Unnamed	0.17
Jones	508.07	Unnamed Tributary to White Clay Creek	Unnamed	3.10
Jones	508.07	Unnamed Tributary to White Clay Creek	Unnamed	2.32
Jones	508.07	Unnamed Tributary to White Clay Creek	Unnamed	2.27
Jones	508.07	Unnamed Tributary to White Clay Creek	Unnamed	1.59
Jones	508.07	Unnamed Tributary to White Clay Creek	Unnamed	1.49
Jones	508.07	Unnamed Tributary to White Clay Creek	Unnamed	0.20

Table 9 Waterbodies within 10 Miles Downstream of Proposed Water Crossings in South Dakota

County	Approximate Milepost	Stream Crossing Name at Point of Crossing [a]	Downstream Waterbody Name [a]	Downstream Waterbody Size (acres) [a]
Jones	508.07	Unnamed Tributary to White Clay Creek	Unnamed	0.17
Jones	509.07	Unnamed Tributary to White Clay Creek	Unnamed	4.39
Jones	509.07	Unnamed Tributary to White Clay Creek	Unnamed	3.67
Jones	509.07	Unnamed Tributary to White Clay Creek	Unnamed	3.10
Jones	509.07	Unnamed Tributary to White Clay Creek	Unnamed	2.27
Jones	509.07	Unnamed Tributary to White Clay Creek	Unnamed	1.59
Jones	509.07	Unnamed Tributary to White Clay Creek	Unnamed	1.49
Jones	509.07	Unnamed Tributary to White Clay Creek	Unnamed	0.54
Jones	509.07	Unnamed Tributary to White Clay Creek	Unnamed	0.39
Jones	509.07	Unnamed Tributary to White Clay Creek	Unnamed	0.20
Jones	509.07	Unnamed Tributary to White Clay Creek	Unnamed	0.17
Jones	509.88	Unnamed Tributary to White Clay Creek	Unnamed	12.61
Jones	509.88	Unnamed Tributary to White Clay Creek	Unnamed	3.10
Jones	509.88	Unnamed Tributary to White Clay Creek	Unnamed	2.56
Jones	509.88	Unnamed Tributary to White Clay Creek	Unnamed	2.27
Jones	509.88	Unnamed Tributary to White Clay Creek	Unnamed	1.73
Jones	509.88	Unnamed Tributary to White Clay Creek	Unnamed	1.59
Jones	509.88	Unnamed Tributary to White Clay Creek	Unnamed	1.49
Jones	509.88	Unnamed Tributary to White Clay Creek	Unnamed	1.04
Jones	509.88	Unnamed Tributary to White Clay Creek	Unnamed	0.66
Jones	509.88	Unnamed Tributary to White Clay Creek	Unnamed	0.39
Jones	509.88	Unnamed Tributary to White Clay Creek	Unnamed	0.39
Jones	509.88	Unnamed Tributary to White Clay Creek	Unnamed	0.20
Jones	509.88	Unnamed Tributary to White Clay Creek	Unnamed	0.17
Jones	510.03	Unnamed Tributary to White Clay Creek	Unnamed	12.61
Jones	510.03	Unnamed Tributary to White Clay Creek	Unnamed	3.10
Jones	510.03	Unnamed Tributary to White Clay Creek	Unnamed	2.56
Jones	510.03	Unnamed Tributary to White Clay Creek	Unnamed	2.27
Jones	510.03	Unnamed Tributary to White Clay Creek	Unnamed	1.73
Jones	510.03	Unnamed Tributary to White Clay Creek	Unnamed	1.59
Jones	510.03	Unnamed Tributary to White Clay Creek	Unnamed	1.49
Jones	510.03	Unnamed Tributary to White Clay Creek	Unnamed	1.04
Jones	510.03	Unnamed Tributary to White Clay Creek	Unnamed	0.66
Jones	510.03	Unnamed Tributary to White Clay Creek	Unnamed	0.39
Jones	510.03	Unnamed Tributary to White Clay Creek	Unnamed	0.39
Jones	510.03	Unnamed Tributary to White Clay Creek	Unnamed	0.20
Jones	510.03	Unnamed Tributary to White Clay Creek	Unnamed	0.17
Jones	510.60	Unnamed Tributary to East Branch White Clay Creek	Unnamed	16.64
Jones	510.60	Unnamed Tributary to East Branch White Clay Creek	Unnamed	7.95
Jones	510.60	Unnamed Tributary to East Branch White Clay Creek	Unnamed	7.79
Jones	510.60	Unnamed Tributary to East Branch White Clay Creek	Unnamed	4.07
Jones	510.60	Unnamed Tributary to East Branch White Clay Creek	Unnamed	1.40
Jones	510.60	Unnamed Tributary to East Branch White Clay Creek	Unnamed	0.39
Jones	510.60	Unnamed Tributary to East Branch White Clay Creek	Unnamed	0.33
Jones	511.25	East Branch White Clay Creek	Unnamed	16.64
Jones	511.25	East Branch White Clay Creek	Unnamed	7.95
Jones	511.25	East Branch White Clay Creek	Unnamed	7.79
Jones	511.25	East Branch White Clay Creek	Unnamed	4.07
Jones	511.25	East Branch White Clay Creek	Unnamed	1.40
Jones	511.25	East Branch White Clay Creek	Unnamed	0.33
Jones	512.29	Unnamed Tributary to East Branch White Clay Creek	Unnamed	16.64
Jones	512.29	Unnamed Tributary to East Branch White Clay Creek	Unnamed	4.07
Jones	512.29	Unnamed Tributary to East Branch White Clay Creek	Unnamed	1.40

Table 9 Waterbodies within 10 Miles Downstream of Proposed Water Crossings in South Dakota

County	Approximate Milepost	Stream Crossing Name at Point of Crossing [a]	Downstream Waterbody Name [a]	Downstream Waterbody Size (acres) [a]
Jones	512.29	Unnamed Tributary to East Branch White Clay Creek	Unnamed	0.33
Jones	512.99	Unnamed Tributary to East Branch White Clay Creek	Unnamed	16.64
Jones	512.99	Unnamed Tributary to East Branch White Clay Creek	Unnamed	4.07
Jones	512.99	Unnamed Tributary to East Branch White Clay Creek	Unnamed	3.39
Jones	512.99	Unnamed Tributary to East Branch White Clay Creek	Unnamed	1.40
Jones	512.99	Unnamed Tributary to East Branch White Clay Creek	Unnamed	0.33
Jones	516.69	Unnamed Tributary to Medicine Creek	Unnamed	7.07
Jones	516.69	Unnamed Tributary to Medicine Creek	Unnamed	6.31
Jones	516.69	Unnamed Tributary to Medicine Creek	Unnamed	2.80
Jones	516.69	Unnamed Tributary to Medicine Creek	Unnamed	1.78
Jones	516.69	Unnamed Tributary to Medicine Creek	Unnamed	0.48
Jones	516.69	Unnamed Tributary to Medicine Creek	Unnamed	0.30
Jones	516.69	Unnamed Tributary to Medicine Creek	Unnamed	0.22
Jones	518.90	Unnamed Tributary to Bull Creek	Unnamed	1.54
Jones	518.90	Unnamed Tributary to Bull Creek	Unnamed	1.51
Jones	518.90	Unnamed Tributary to Bull Creek	Unnamed	1.07
Jones	518.90	Unnamed Tributary to Bull Creek	Unnamed	0.42
Jones	519.52	Unnamed Tributary to Bull Creek	Unnamed	3.12
Jones	519.52	Unnamed Tributary to Bull Creek	Unnamed	1.52
Jones	519.52	Unnamed Tributary to Bull Creek	Unnamed	1.25
Jones	521.73	Unnamed Tributary to Medicine Creek	Unnamed	2.27
Jones	521.73	Unnamed Tributary to Medicine Creek	Unnamed	0.34
Jones	521.73	Unnamed Tributary to Medicine Creek	Unnamed	0.11
Jones	522.56	Unnamed Tributary to Medicine Creek	Unnamed	2.27
Jones	522.56	Unnamed Tributary to Medicine Creek	Unnamed	0.34
Jones	523.27	Unnamed Tributary to Williams Creek	Unnamed	15.42
Jones	523.27	Williams Creek	Unnamed	15.42
Lyman	523.27	Unnamed Tributary to Williams Creek	Unnamed	4.79
Lyman	523.27	Unnamed Tributary to Williams Creek	Unnamed	4.48
Jones	523.27	Unnamed Tributary to Williams Creek	Unnamed	3.97
Jones	523.27	Unnamed Tributary to Williams Creek	Unnamed	3.52
Lyman	523.27	Unnamed Tributary to Williams Creek	Unnamed	1.95
Lyman	523.27	Unnamed Tributary to Williams Creek	Unnamed	1.95
Jones	523.27	Unnamed Tributary to Williams Creek	Unnamed	0.34
Jones	523.69	Unnamed Tributary to Williams Creek	Unnamed	15.42
Lyman	523.69	Unnamed Tributary to Williams Creek	Unnamed	4.79
Lyman	523.69	Unnamed Tributary to Williams Creek	Unnamed	4.48
Jones	523.69	Unnamed Tributary to Williams Creek	Unnamed	3.97
Jones	523.69	Unnamed Tributary to Williams Creek	Unnamed	3.52
Lyman	523.69	Unnamed Tributary to Williams Creek	Unnamed	1.95
Lyman	523.69	Unnamed Tributary to Williams Creek	Unnamed	1.95
Jones	523.69	Unnamed Tributary to Williams Creek	Unnamed	1.07
Jones	523.69	Unnamed Tributary to Williams Creek	Unnamed	0.65
Jones	523.69	Unnamed Tributary to Williams Creek	Unnamed	0.59
Jones	523.69	Unnamed Tributary to Williams Creek	Unnamed	0.44
Jones	523.69	Unnamed Tributary to Williams Creek	Unnamed	0.34
Jones	524.42	Unnamed Tributary to Williams Creek	Unnamed	15.42
Lyman	524.42	Unnamed Tributary to Williams Creek	Unnamed	4.79
Lyman	524.42	Unnamed Tributary to Williams Creek	Unnamed	4.48
Lyman	524.42	Unnamed Tributary to Williams Creek	Unnamed	1.95
Lyman	524.42	Unnamed Tributary to Williams Creek	Unnamed	1.95
Jones	524.42	Unnamed Tributary to Williams Creek	Unnamed	1.07
Jones	524.42	Unnamed Tributary to Williams Creek	Unnamed	0.65

Table 9 Waterbodies within 10 Miles Downstream of Proposed Water Crossings in South Dakota

County	Approximate Milepost	Stream Crossing Name at Point of Crossing [a]	Downstream Waterbody Name [a]	Downstream Waterbody Size (acres) [a]
Jones	524.42	Unnamed Tributary to Williams Creek	Unnamed	0.59
Jones	524.42	Unnamed Tributary to Williams Creek	Unnamed	0.44
Lyman	524.87	Williams Creek	Unnamed	4.79
Lyman	524.87	Williams Creek	Unnamed	4.48
Lyman	524.87	Williams Creek	Unnamed	1.95
Lyman	524.87	Williams Creek	Unnamed	1.95
Jones	524.87	Williams Creek	Unnamed	1.07
Jones	524.87	Unnamed Tributary to Williams Creek	Unnamed	0.65
Jones	524.87	Williams Creek	Unnamed	0.59
Jones	524.87	Williams Creek	Unnamed	0.44
Jones	524.87	Williams Creek	Unnamed	0.44
Jones	525.26	Unnamed Tributary to Williams Creek	Unnamed	15.42
Lyman	525.26	Unnamed Tributary to Williams Creek	Unnamed	4.79
Lyman	525.26	Unnamed Tributary to Williams Creek	Unnamed	4.48
Lyman	525.26	Unnamed Tributary to Williams Creek	Unnamed	1.95
Lyman	525.26	Unnamed Tributary to Williams Creek	Unnamed	1.95
Jones	525.26	Unnamed Tributary to Williams Creek	Unnamed	1.07
Jones	525.26	Unnamed Tributary to Williams Creek	Unnamed	0.69
Jones	525.26	Unnamed Tributary to Williams Creek	Unnamed	0.44
Jones	526.60	Unnamed Tributary to Williams Creek	Unnamed	13.15
Lyman	526.60	Unnamed Tributary to Williams Creek	Unnamed	4.79
Lyman	526.60	Unnamed Tributary to Williams Creek	Unnamed	4.48
Lyman	526.60	Unnamed Tributary to Williams Creek	Unnamed	1.95
Lyman	526.60	Unnamed Tributary to Williams Creek	Unnamed	1.95
Jones	526.60	Unnamed Tributary to Williams Creek	Unnamed	1.18
Jones	526.60	Unnamed Tributary to Williams Creek	Unnamed	0.94
Jones	526.60	Unnamed Tributary to Williams Creek	Unnamed	0.88
Jones	526.60	Unnamed Tributary to Williams Creek	Unnamed	0.53
Jones	526.60	Unnamed Tributary to Williams Creek	Unnamed	0.40
Jones	526.60	Unnamed Tributary to Williams Creek	Unnamed	0.21
Jones	527.99	Unnamed Tributary to Williams Creek	Unnamed	6.86
Lyman	527.99	Unnamed Tributary to Williams Creek	Unnamed	4.79
Lyman	527.99	Unnamed Tributary to Williams Creek	Unnamed	4.48
Jones	527.99	Unnamed Tributary to Williams Creek	Unnamed	2.30
Lyman	527.99	Unnamed Tributary to Williams Creek	Unnamed	1.95
Lyman	527.99	Unnamed Tributary to Williams Creek	Unnamed	1.95
Jones	528.04	Unnamed Tributary to Williams Creek	Unnamed	6.86
Lyman	528.04	Unnamed Tributary to Williams Creek	Unnamed	4.79
Lyman	528.04	Unnamed Tributary to Williams Creek	Unnamed	4.48
Jones	528.04	Unnamed Tributary to Williams Creek	Unnamed	2.30
Lyman	528.04	Unnamed Tributary to Williams Creek	Unnamed	1.95
Lyman	528.04	Unnamed Tributary to Williams Creek	Unnamed	1.95
Jones	528.07	Unnamed Tributary to Williams Creek	Unnamed	6.86
Lyman	528.07	Unnamed Tributary to Williams Creek	Unnamed	4.79
Lyman	528.07	Unnamed Tributary to Williams Creek	Unnamed	4.48
Jones	528.07	Unnamed Tributary to Williams Creek	Unnamed	2.30
Lyman	528.07	Unnamed Tributary to Williams Creek	Unnamed	1.95
Lyman	528.07	Unnamed Tributary to Williams Creek	Unnamed	1.95
Lyman	529.52	Unnamed Tributary to Williams Creek	Unnamed	4.79
Lyman	529.52	Unnamed Tributary to Williams Creek	Unnamed	4.48
Lyman	529.52	Unnamed Tributary to Williams Creek	Unnamed	1.95
Lyman	529.52	Unnamed Tributary to Williams Creek	Unnamed	1.95
Lyman	529.52	Unnamed Tributary to Williams Creek	Unnamed	0.21

Table 9 Waterbodies within 10 Miles Downstream of Proposed Water Crossings in South Dakota

County	Approximate Milepost	Stream Crossing Name at Point of Crossing [a]	Downstream Waterbody Name [a]	Downstream Waterbody Size (acres) [a]
Lyman	529.92	Unnamed Tributary to Williams Creek	Unnamed	4.79
Lyman	529.92	Unnamed Tributary to Williams Creek	Unnamed	4.48
Lyman	529.92	Unnamed Tributary to Williams Creek	Unnamed	1.95
Lyman	529.92	Unnamed Tributary to Williams Creek	Unnamed	1.95
Lyman	529.92	Unnamed Tributary to Williams Creek	Unnamed	0.21
Tripp	545.70	Unnamed Tributary to Cottonwood Creek	Unnamed	0.83
Tripp	546.76	Unnamed Tributary to Cottonwood Creek	Unnamed	2.14
Tripp	549.49	Unnamed Tributary to Cottonwood Creek	Unnamed	0.34
Tripp	550.20	Unnamed Tributary to Cottonwood Creek	Unnamed	0.27
Tripp	550.87	Unnamed Tributary to Cottonwood Creek	Unnamed	0.25
Tripp	551.38	Unnamed Tributary to Owl Creek	Unnamed	1.97
Tripp	551.38	Unnamed Tributary to Owl Creek	Unnamed	0.42
Tripp	551.38	Unnamed Tributary to Owl Creek	Unnamed	0.35
Tripp	551.38	Unnamed Tributary to Owl Creek	Unnamed	0.27
Tripp	551.38	Unnamed Tributary to Owl Creek	Unnamed	0.23
Tripp	551.38	Unnamed Tributary to Owl Creek	Unnamed	0.22
Tripp	551.38	Unnamed Tributary to Owl Creek	Unnamed	0.14
Tripp	551.38	Unnamed Tributary to Owl Creek	Unnamed	0.12
Tripp	551.55	Unnamed Tributary to Owl Creek	Unnamed	1.97
Tripp	551.55	Unnamed Tributary to Owl Creek	Unnamed	0.42
Tripp	551.55	Unnamed Tributary to Owl Creek	Unnamed	0.35
Tripp	551.55	Unnamed Tributary to Owl Creek	Unnamed	0.27
Tripp	551.55	Unnamed Tributary to Owl Creek	Unnamed	0.23
Tripp	551.55	Unnamed Tributary to Owl Creek	Unnamed	0.22
Tripp	551.55	Unnamed Tributary to Owl Creek	Unnamed	0.14
Tripp	551.55	Unnamed Tributary to Owl Creek	Unnamed	0.12
Tripp	553.87	Unnamed Tributary to Owl Creek	Unnamed	0.42
Tripp	553.87	Unnamed Tributary to Owl Creek	Unnamed	0.35
Tripp	553.87	Unnamed Tributary to Owl Creek	Unnamed	0.27
Tripp	553.87	Unnamed Tributary to Owl Creek	Unnamed	0.23
Tripp	553.87	Unnamed Tributary to Owl Creek	Unnamed	0.22
Tripp	553.87	Unnamed Tributary to Owl Creek	Unnamed	0.14
Tripp	554.43	Unnamed Tributary to Owl Creek	Unnamed	0.20
Tripp	554.43	Unnamed Tributary to Owl Creek	Unnamed	0.09
Tripp	555.68	Unnamed Tributary to Owl Creek	Unnamed	0.48
Tripp	555.68	Unnamed Tributary to Owl Creek	Unnamed	0.37
Tripp	555.68	Unnamed Tributary to Owl Creek	Unnamed	0.20
Tripp	555.68	Unnamed Tributary to Owl Creek	Unnamed	0.18
Tripp	555.68	Unnamed Tributary to Owl Creek	Unnamed	0.17
Tripp	555.68	Unnamed Tributary to Owl Creek	Unnamed	0.11
Tripp	555.68	Unnamed Tributary to Owl Creek	Unnamed	0.08
Tripp	555.87	Unnamed Tributary to Owl Creek	Unnamed	0.48
Tripp	555.87	Unnamed Tributary to Owl Creek	Unnamed	0.37
Tripp	555.87	Unnamed Tributary to Owl Creek	Unnamed	0.20
Tripp	555.87	Unnamed Tributary to Owl Creek	Unnamed	0.18
Tripp	555.87	Unnamed Tributary to Owl Creek	Unnamed	0.17
Tripp	555.87	Unnamed Tributary to Owl Creek	Unnamed	0.11
Tripp	555.87	Unnamed Tributary to Owl Creek	Unnamed	0.08
Tripp	557.59	Unnamed Tributary to Owl Creek	Unnamed	0.48
Tripp	557.59	Unnamed Tributary to Owl Creek	Unnamed	0.20
Tripp	557.59	Unnamed Tributary to Owl Creek	Unnamed	0.18
Tripp	557.59	Unnamed Tributary to Owl Creek	Unnamed	0.11
Tripp	557.59	Unnamed Tributary to Owl Creek	Unnamed	0.10

Table 9 Waterbodies within 10 Miles Downstream of Proposed Water Crossings in South Dakota

County	Approximate Milepost	Stream Crossing Name at Point of Crossing [a]	Downstream Waterbody Name [a]	Downstream Waterbody Size (acres) [a]
Tripp	557.59	Unnamed Tributary to Owl Creek	Unnamed	0.08
Tripp	561.73	Unnamed Tributary to Owl Creek	Unnamed	0.18
Tripp	561.73	Unnamed Tributary to Owl Creek	Unnamed	0.14
Tripp	561.73	Unnamed Tributary to Owl Creek	Unnamed	0.14
Tripp	561.73	Unnamed Tributary to Owl Creek	Unnamed	0.11
Tripp	564.63	Hollow Creek	Unnamed	0.20
Tripp	564.63	Hollow Creek	Unnamed	0.14
Tripp	564.63	Hollow Creek	Unnamed	0.10
Tripp	564.83	Unnamed Tributary to Hollow Creek	Unnamed	0.20
Tripp	564.83	Unnamed Tributary to Hollow Creek	Unnamed	0.14
Tripp	564.83	Unnamed Tributary to Hollow Creek	Unnamed	0.10
Tripp	565.03	Unnamed Tributary to Hollow Creek	Unnamed	0.20
Tripp	565.03	Unnamed Tributary to Hollow Creek	Unnamed	0.14
Tripp	565.03	Unnamed Tributary to Hollow Creek	Unnamed	0.10
Tripp	567.53	Unnamed Tributary to Dog Ear Creek	Unnamed	0.59
Tripp	567.53	Unnamed Tributary to Dog Ear Creek	Unnamed	0.45
Tripp	567.63	Unnamed Tributary to Dog Ear Creek	Unnamed	0.59
Tripp	567.63	Unnamed Tributary to Dog Ear Creek	Unnamed	0.45
Tripp	569.87	Unnamed Tributary to Dog Ear Creek	Unnamed	0.34
Tripp	569.87	Unnamed Tributary to Dog Ear Creek	Unnamed	0.09
Tripp	572.03	Unnamed Tributary to Mud Creek	Unnamed	1.15
Tripp	572.49	Unnamed Tributary to Mud Creek	Unnamed	1.15
Tripp	572.49	Unnamed Tributary to Mud Creek	Unnamed	0.11
Tripp	576.95	Sand Creek	Unnamed	0.21
Tripp	576.95	Sand Creek	Unnamed	0.21
Tripp	576.95	Sand Creek	Unnamed	0.18
Tripp	576.95	Sand Creek	Unnamed	0.14
Tripp	576.95	Sand Creek	Unnamed	0.14
Tripp	576.95	Sand Creek	Unnamed	0.13
Tripp	576.95	Sand Creek	Unnamed	0.09
Tripp	576.95	Sand Creek	Unnamed	0.05
Tripp	580.89	Ponca Creek	Unnamed	0.37
Tripp	580.89	Ponca Creek	Unnamed	0.29
Tripp	580.89	Ponca Creek	Unnamed	0.13
Tripp	581.02	Unnamed Tributary to Ponca Creek	Unnamed	0.37
Tripp	581.02	Unnamed Tributary to Ponca Creek	Unnamed	0.29
Tripp	581.02	Unnamed Tributary to Ponca Creek	Unnamed	0.13
Tripp	584.33	Unnamed Tributary to Ponca Creek	Unnamed	0.36
Tripp	584.48	Unnamed Tributary to Ponca Creek	Unnamed	0.36
Tripp	585.35	Unnamed Tributary to Ponca Creek	Unnamed	0.36
Tripp	592.75	Unnamed Tributary to Lute Creek	Unnamed	0.72
Tripp	598.62	Unnamed Tributary to Buffalo Creek	Unnamed	0.66

Table Notes:

[a] GIS data source for waterbody names and size is from the 2012 National Hydrography Dataset (NHD). Accessed on Sept. 17, 2012; ftp://nhdftp.usgs.gov/DataSets/Staged/States/FileGDB/HighResolution/.

Table 10 Montana Wetlands Along Project Route by Milepost

County	Beginning Milepost[a]	Distance Crossed (ft)[b]	Wetland Type[c]	Survey Type[d]	Source[e]
Phillips	1.03	154.3	PEM	Desktop	NWI
Phillips	1.08	10.6	PEM	Desktop	NWI
Phillips	1.08	329.6	PEM	Desktop	Keystone
Phillips	1.15	7.7	Open Water	Desktop	Keystone
Phillips	1.36	5.1	Open Water	Desktop	Keystone
Phillips	1.36	72.6	PEM	Desktop	NWI
Phillips	1.37	42.6	PEM	Desktop	NWI
Phillips	1.38	4.2	Open Water	Desktop	Keystone
Phillips	1.70	12.2	Open Water	Desktop	Keystone
Phillips	2.30	3.9	Open Water	Desktop	Keystone
Phillips	2.48	7.2	Open Water	Desktop	Keystone
Phillips	2.81	133.4	PEM	Desktop	NWI
Phillips	3.15	4.6	Open Water	Desktop	Keystone
Phillips	4.61	32.8	PEM	Desktop	NWI
Phillips	5.31	5.3	Open Water	Desktop	Keystone
Phillips	5.32	4.3	Open Water	Desktop	Keystone
Phillips	5.32	6.5	Open Water	Desktop	Keystone
Phillips	5.45	87.8	PEM	Desktop	NWI
Phillips	5.93	6.3	Open Water	Desktop	Keystone
Phillips	5.94	3.4	Open Water	Desktop	Keystone
Phillips	5.95	126.2	PEM	Desktop	NWI
Phillips	5.95	44.8	PEM	Desktop	NWI
Phillips	6.51	68.1	PEM	Desktop	NWI
Phillips	6.89	140.7	PEM	Desktop	GAP2010
Phillips	7.22	63.2	PEM	Desktop	NWI
Phillips	7.29	5.7	Open Water	Desktop	Keystone
Phillips	7.43	6.2	Open Water	Desktop	Keystone
Phillips	7.74	61.5	Open Water	Desktop	Keystone
Phillips	8.18	8.9	Open Water	Desktop	NWI
Phillips	8.46	28.6	Open Water	Desktop	NWI
Phillips	9.04	46.8	Open Water	Desktop	Keystone
Phillips	9.05	3.7	Open Water	Desktop	Keystone
Phillips	9.11	5.0	Open Water	Desktop	Keystone
Phillips	9.12	4.4	Open Water	Desktop	Keystone
Phillips	9.59	2.3	Open Water	Desktop	Keystone
Phillips	10.37	31.1	Open Water	Desktop	Keystone
Phillips	10.73	16.2	Open Water	Desktop	Keystone
Phillips	11.26	17.3	Open Water	Desktop	Keystone
Phillips	11.67	48.7	Open Water	Desktop	Keystone
Phillips	11.88	48.3	Open Water	Desktop	Keystone
Phillips	12.00	36.2	Open Water	Desktop	Keystone
Phillips	13.74	7.7	Open Water	Desktop	Keystone

Table 10 Montana Wetlands Along Project Route by Milepost

County	Beginning Milepost[a]	Distance Crossed (ft)[b]	Wetland Type[c]	Survey Type[d]	Source[e]
Phillips	13.82	5.9	Open Water	Desktop	NWI
Phillips	14.01	23.7	Open Water	Desktop	Keystone
Phillips	14.24	3.3	Open Water	Desktop	Keystone
Phillips	14.63	5.4	Open Water	Desktop	Keystone
Phillips	14.64	6.2	Open Water	Desktop	Keystone
Phillips	14.99	32.4	Open Water	Desktop	Keystone
Phillips	15.16	83.1	PEM	Desktop	NWI
Phillips	15.68	2.6	Open Water	Desktop	Keystone
Phillips	16.43	271.2	PEM	Desktop	GAP2010
Phillips	16.87	172.0	PEM	Desktop	NWI
Phillips	16.96	63.1	Open Water	Desktop	Keystone
Phillips	16.97	22.1	Open Water	Desktop	Keystone
Phillips	17.02	46.8	Open Water	Desktop	Keystone
Phillips	17.89	22.5	Open Water	Desktop	Keystone
Phillips	17.92	52.6	Open Water	Desktop	Keystone
Phillips	18.09	34.7	Open Water	Desktop	Keystone
Phillips	18.35	73.0	Open Water	Desktop	Keystone
Phillips	18.41	23.0	Open Water	Desktop	Keystone
Phillips	18.98	27.5	Open Water	Desktop	Keystone
Phillips	19.18	74.5	Open Water	Desktop	Keystone
Phillips	22.16	17.4	Open Water	Desktop	Keystone
Phillips	22.32	24.2	Open Water	Desktop	Keystone
Phillips	22.70	2.3	Open Water	Desktop	Keystone
Phillips	22.74	11.5	PSS	Desktop	Keystone
Phillips	23.69	109.8	Open Water	Field Survey	Keystone
Phillips	23.81	318.0	PSS	Field Survey	Keystone
Valley	24.94	928.5	PEM	Field Survey	Keystone
Valley	25.27	117.6	PSS	Desktop	NLCD2006
Valley	25.28	35.6	PEM	Field Survey	Keystone
Valley	25.30	12.7	Open Water	Desktop	Keystone
Valley	25.36	601.6	PSS	Desktop	NLCD2006
Valley	25.54	5.8	Open Water	Desktop	Keystone
Valley	25.56	1.9	Open Water	Desktop	Keystone
Valley	25.57	42.8	Open Water	Desktop	Keystone
Valley	25.57	117.4	Open Water	Desktop	NWI
Valley	26.04	70.7	Open Water	Desktop	Keystone
Valley	26.80	39.6	Open Water	Desktop	Keystone
Valley	26.91	5.2	Open Water	Desktop	Keystone
Valley	26.93	28.8	Open Water	Desktop	Keystone
Valley	27.01	13.2	Open Water	Desktop	Keystone
Valley	28.66	53.5	Open Water	Desktop	Keystone
Valley	29.55	2.4	Open Water	Desktop	Keystone
Valley	30.31	15.8	Open Water	Desktop	Keystone

Table 10 Montana Wetlands Along Project Route by Milepost

County	Beginning Milepost[a]	Distance Crossed (ft)[b]	Wetland Type[c]	Survey Type[d]	Source[e]
Valley	32.26	6.5	Open Water	Desktop	Keystone
Valley	32.31	41.2	Open Water	Desktop	Keystone
Valley	32.48	21.9	Open Water	Desktop	Keystone
Valley	33.01	11.7	Open Water	Desktop	Keystone
Valley	33.07	52.3	Open Water	Desktop	Keystone
Valley	34.55	60.9	Open Water	Desktop	Keystone
Valley	34.87	309.8	PSS	Desktop	NLCD2006
Valley	35.19	44.9	Open Water	Desktop	Keystone
Valley	35.36	106.1	PEM	Desktop	NWI
Valley	35.40	25.6	PSS	Desktop	NLCD2006
Valley	35.95	143.3	PSS	Desktop	NLCD2006
Valley	37.83	14.8	Open Water	Desktop	NWI
Valley	37.98	49.9	Open Water	Field Survey	Keystone
Valley	38.96	41.8	Open Water	Desktop	NWI
Valley	38.98	61.9	Open Water	Desktop	Keystone
Valley	39.01	47.3	Open Water	Desktop	Keystone
Valley	39.01	5.7	Open Water	Desktop	Keystone
Valley	39.02	42.5	Open Water	Desktop	Keystone
Valley	40.24	25.4	Open Water	Desktop	Keystone
Valley	40.39	8.3	Open Water	Desktop	Keystone
Valley	40.73	5.4	Open Water	Desktop	Keystone
Valley	40.78	58.4	Open Water	Desktop	Keystone
Valley	40.92	29.8	Open Water	Desktop	Keystone
Valley	41.20	4.6	Open Water	Desktop	Keystone
Valley	41.31	4.0	Open Water	Desktop	Keystone
Valley	41.58	6.6	Open Water	Field Survey	Keystone
Valley	42.41	3.4	Open Water	Desktop	Keystone
Valley	43.24	10.6	Open Water	Desktop	Keystone
Valley	43.67	1.7	Open Water	Field Survey	Keystone
Valley	44.10	37.0	Open Water	Field Survey	Keystone
Valley	44.21	7.0	Open Water	Desktop	Keystone
Valley	44.44	26.3	Open Water	Desktop	Keystone
Valley	44.91	18.7	Open Water	Desktop	Keystone
Valley	44.99	14.3	Open Water	Desktop	Keystone
Valley	47.18	4.8	Open Water	Desktop	Keystone
Valley	47.80	5.4	Open Water	Desktop	Keystone
Valley	48.14	6.5	Open Water	Desktop	Keystone
Valley	48.20	28.4	Open Water	Field Survey	Keystone
Valley	49.14	19.0	Open Water	Desktop	Keystone
Valley	49.63	18.1	Open Water	Field Survey	Keystone
Valley	49.74	36.1	Open Water	Desktop	Keystone
Valley	49.77	12.3	Open Water	Desktop	Keystone
Valley	49.81	44.2	Open Water	Desktop	Keystone

Table 10 Montana Wetlands Along Project Route by Milepost

County	Beginning Milepost[a]	Distance Crossed (ft)[b]	Wetland Type[c]	Survey Type[d]	Source[e]
Valley	51.17	9.0	Open Water	Field Survey	Keystone
Valley	51.31	22.0	Open Water	Desktop	Keystone
Valley	51.40	3.3	Open Water	Field Survey	Keystone
Valley	51.47	6.7	Open Water	Field Survey	Keystone
Valley	52.35	31.1	Open Water	Desktop	Keystone
Valley	52.46	42.0	Open Water	Field Survey	Keystone
Valley	53.38	5.6	Open Water	Desktop	Keystone
Valley	54.02	18.3	Open Water	Desktop	Keystone
Valley	55.10	64.6	Open Water	Desktop	Keystone
Valley	55.34	45.8	Open Water	Desktop	Keystone
Valley	55.55	91.8	Open Water	Desktop	Keystone
Valley	56.00	48.9	Open Water	Desktop	Keystone
Valley	56.15	8.0	Open Water	Field Survey	Keystone
Valley	56.29	3.8	Open Water	Desktop	Keystone
Valley	56.32	4.1	Open Water	Desktop	Keystone
Valley	56.59	17.3	Open Water	Desktop	Keystone
Valley	57.03	10.9	Open Water	Desktop	Keystone
Valley	57.12	28.8	Open Water	Desktop	Keystone
Valley	57.16	2.8	Open Water	Desktop	Keystone
Valley	57.58	4.0	Open Water	Desktop	Keystone
Valley	57.62	4.2	Open Water	Desktop	Keystone
Valley	57.79	9.0	Open Water	Field Survey	Keystone
Valley	58.02	30.1	Open Water	Desktop	Keystone
Valley	58.41	15.6	Open Water	Field Survey	Keystone
Valley	58.84	51.2	Open Water	Desktop	Keystone
Valley	59.38	14.1	Open Water	Desktop	Keystone
Valley	59.43	3.2	Open Water	Desktop	Keystone
Valley	59.90	6.8	Open Water	Desktop	Keystone
Valley	61.74	36.6	Open Water	Desktop	Keystone
Valley	62.79	54.5	Open Water	Desktop	Keystone
Valley	63.05	4.1	Open Water	Desktop	Keystone
Valley	64.41	4.8	Open Water	Desktop	Keystone
Valley	65.51	6.5	Open Water	Field Survey	Keystone
Valley	65.78	11.1	Open Water	Desktop	Keystone
Valley	66.00	621.4	PSS	Desktop	NLCD2006
Valley	67.10	10.6	Open Water	Field Survey	Keystone
Valley	67.91	7.7	Open Water	Desktop	Keystone
Valley	69.48	23.6	Open Water	Desktop	Keystone
Valley	71.75	28.7	Open Water	Desktop	Keystone
Valley	71.80	147.5	Open Water	Desktop	Keystone
Valley	71.81	5.4	Open Water	Desktop	Keystone
Valley	71.86	5.8	Open Water	Desktop	Keystone
Valley	71.86	4.6	Open Water	Desktop	Keystone

Table 10 Montana Wetlands Along Project Route by Milepost

County	Beginning Milepost[a]	Distance Crossed (ft)[b]	Wetland Type[c]	Survey Type[d]	Source[e]
Valley	72.29	135.6	PEM	Desktop	Keystone
Valley	73.66	20.2	PEM	Desktop	Keystone
Valley	75.21	16.7	Open Water	Desktop	Keystone
Valley	75.66	2.5	Open Water	Desktop	Keystone
Valley	76.53	956.9	PEM	Desktop	NWI
Valley	77.46	7.6	Open Water	Desktop	Keystone
Valley	78.55	2.0	PSS	Desktop	NLCD2006
Valley	78.58	7.3	PSS	Desktop	NLCD2006
Valley	78.58	11.4	PSS	Desktop	NLCD2006
Valley	78.82	7.8	Open Water	Desktop	NWI
Valley	79.38	113.3	Open Water	Field Survey	Keystone
Valley	80.16	4.0	Open Water	Field Survey	Keystone
Valley	83.22	3.2	Open Water	Desktop	Keystone
Valley	83.27	4.1	Open Water	Desktop	Keystone
Valley	83.40	6.0	Open Water	Desktop	Keystone
Valley	83.40	5.6	Open Water	Desktop	Keystone
Valley	83.40	15.3	Open Water	Field Survey	Keystone
Valley	83.43	9.9	Open Water	Desktop	Keystone
Valley	83.46	15.2	Open Water	Desktop	Keystone
Valley	83.88	27.0	Open Water	Field Survey	Keystone
Valley	83.89	22.1	Open Water	Desktop	Keystone
Valley	84.15	45.0	Open Water	Desktop	Keystone
Valley	84.75	12.9	Open Water	Desktop	Keystone
Valley	84.96	10.7	Open Water	Desktop	Keystone
Valley	84.96	21.2	Open Water	Desktop	Keystone
Valley	85.07	20.5	Open Water	Desktop	Keystone
Valley	85.49	6.4	Open Water	Desktop	Keystone
Valley	87.71	5.9	Open Water	Field Survey	Keystone
Valley	88.35	18.2	Open Water	Desktop	Keystone
Valley	88.56	9.2	Open Water	Field Survey	Keystone
Valley	88.58	120.6	PSS	Desktop	NLCD2006
Valley	88.82	1024.9	Open Water	Field Survey	Keystone
McCone	88.83	74.8	Open Water	Desktop	NWI
McCone	89.10	312.6	PSS	Desktop	NLCD2006
McCone	89.30	230.8	PSS	Desktop	NLCD2006
McCone	89.31	651.1	PSS	Desktop	NLCD2006
McCone	89.42	234.3	PSS	Desktop	NLCD2006
McCone	89.53	5.8	Open Water	Desktop	Keystone
McCone	89.55	12.6	Open Water	Desktop	Keystone
McCone	89.74	16.0	Open Water	Field Survey	Keystone
McCone	89.88	10.9	Open Water	Field Survey	Keystone
McCone	90.26	14.4	Open Water	Field Survey	Keystone
McCone	90.47	27.5	Open Water	Field Survey	Keystone

Table 10 Montana Wetlands Along Project Route by Milepost

County	Beginning Milepost[a]	Distance Crossed (ft)[b]	Wetland Type[c]	Survey Type[d]	Source[e]
McCone	90.61	3.0	Open Water	Desktop	Keystone
McCone	93.49	2.3	Open Water	Desktop	Keystone
McCone	94.02	33.6	Open Water	Field Survey	Keystone
McCone	94.51	7.7	Open Water	Desktop	Keystone
McCone	94.67	18.1	Open Water	Field Survey	Keystone
McCone	95.54	3.8	Open Water	Desktop	Keystone
McCone	95.76	18.4	Open Water	Desktop	Keystone
McCone	96.10	25.8	Open Water	Desktop	Keystone
McCone	96.20	21.9	Open Water	Desktop	Keystone
McCone	96.33	35.5	Open Water	Desktop	Keystone
McCone	97.54	39.0	Open Water	Desktop	Keystone
McCone	97.58	19.0	Open Water	Field Survey	Keystone
McCone	97.97	8.0	Open Water	Field Survey	Keystone
McCone	99.54	22.1	Open Water	Desktop	Keystone
McCone	99.59	61.5	Open Water	Desktop	Keystone
McCone	100.05	18.9	Open Water	Desktop	Keystone
McCone	100.50	31.7	Open Water	Desktop	Keystone
McCone	101.53	30.6	Open Water	Field Survey	Keystone
McCone	102.31	2.6	Open Water	Desktop	Keystone
McCone	102.35	5.0	Open Water	Desktop	Keystone
McCone	102.93	48.8	Open Water	Desktop	Keystone
McCone	103.38	14.7	Open Water	Desktop	Keystone
McCone	103.44	85.0	Open Water	Field Survey	Keystone
McCone	103.83	31.7	Open Water	Desktop	Keystone
McCone	106.26	75.6	Open Water	Desktop	Keystone
McCone	106.27	17.7	Open Water	Field Survey	Keystone
McCone	106.54	22.2	Open Water	Desktop	Keystone
McCone	106.96	2.6	Open Water	Desktop	Keystone
McCone	107.59	4.9	Open Water	Desktop	Keystone
McCone	108.23	4.3	Open Water	Desktop	Keystone
McCone	108.45	5.4	Open Water	Field Survey	Keystone
McCone	108.84	6.8	Open Water	Field Survey	Keystone
McCone	109.21	29.5	Open Water	Desktop	Keystone
McCone	111.44	21.6	Open Water	Desktop	Keystone
McCone	111.49	17.7	Open Water	Desktop	Keystone
McCone	111.52	33.1	Open Water	Desktop	Keystone
McCone	111.60	48.5	Open Water	Desktop	Keystone
McCone	112.09	13.6	Open Water	Field Survey	Keystone
McCone	112.40	3.2	Open Water	Desktop	Keystone
McCone	112.41	47.6	Open Water	Field Survey	Keystone
McCone	112.61	31.2	Open Water	Desktop	Keystone
McCone	112.83	7.6	Open Water	Desktop	Keystone
McCone	113.09	63.2	PEM	Desktop	NWI

Table 10 Montana Wetlands Along Project Route by Milepost

County	Beginning Milepost[a]	Distance Crossed (ft)[b]	Wetland Type[c]	Survey Type[d]	Source[e]
McCone	113.13	9.4	Open Water	Field Survey	Keystone
McCone	114.76	23.3	PSS	Desktop	NLCD2006
McCone	115.25	113.1	PSS	Desktop	NLCD2006
McCone	116.50	45.6	Open Water	Desktop	Keystone
McCone	116.82	14.1	Open Water	Desktop	Keystone
McCone	117.21	3.0	Open Water	Desktop	Keystone
McCone	118.22	24.0	Open Water	Desktop	Keystone
McCone	119.61	2.2	Open Water	Desktop	Keystone
McCone	119.61	16.6	Open Water	Field Survey	Keystone
McCone	119.61	8.7	Open Water	Desktop	Keystone
McCone	119.62	108.4	Open Water	Desktop	Keystone
McCone	119.62	21.7	Open Water	Desktop	Keystone
McCone	119.63	34.1	Open Water	Desktop	Keystone
McCone	119.84	3.5	Open Water	Desktop	Keystone
McCone	119.89	22.9	PEM	Desktop	NWI
McCone	119.94	9.7	Open Water	Field Survey	Keystone
McCone	120.42	81.6	PEM	Desktop	NLCD2006
McCone	120.55	14.8	PEM	Desktop	NLCD2006
McCone	120.55	181.0	PEM	Desktop	NLCD2006
McCone	121.25	19.0	Open Water	Desktop	Keystone
McCone	121.41	11.4	Open Water	Desktop	Keystone
McCone	121.52	21.2	PEM	Desktop	NWI
McCone	122.08	2.8	Open Water	Desktop	Keystone
McCone	122.08	13.2	Open Water	Desktop	Keystone
McCone	122.59	0.1	PEM	Desktop	NLCD2006
McCone	123.64	13.8	Open Water	Desktop	Keystone
McCone	123.65	2.0	Open Water	Desktop	Keystone
McCone	123.65	13.2	Open Water	Desktop	Keystone
McCone	124.26	30.8	Open Water	Desktop	Keystone
McCone	124.29	35.8	PEM	Desktop	NWI
McCone	124.36	22.3	Open Water	Desktop	Keystone
McCone	124.37	54.1	PEM	Desktop	GAP2010
McCone	124.38	10.3	Open Water	Desktop	Keystone
McCone	124.44	17.0	Open Water	Desktop	Keystone
McCone	124.56	12.3	PEM	Desktop	NWI
McCone	125.81	17.5	Open Water	Field Survey	Keystone
McCone	125.85	16.2	Open Water	Desktop	Keystone
McCone	125.94	31.8	Open Water	Desktop	Keystone
McCone	125.95	2.8	Open Water	Desktop	Keystone
McCone	126.41	1.8	Open Water	Desktop	Keystone
McCone	126.92	17.3	Open Water	Desktop	Keystone
McCone	127.21	5.1	Open Water	Desktop	Keystone
McCone	127.47	2.2	Open Water	Desktop	Keystone

Table 10 Montana Wetlands Along Project Route by Milepost

County	Beginning Milepost[a]	Distance Crossed (ft)[b]	Wetland Type[c]	Survey Type[d]	Source[e]
McCone	127.47	30.9	Open Water	Desktop	Keystone
McCone	127.48	5.7	Open Water	Desktop	Keystone
McCone	128.02	20.0	Open Water	Field Survey	Keystone
McCone	128.09	243.3	PEM	Desktop	NWI
McCone	128.40	11.8	Open Water	Desktop	Keystone
McCone	128.95	51.2	Open Water	Desktop	Keystone
McCone	128.95	24.8	Open Water	Field Survey	Keystone
McCone	129.60	26.6	PEM	Field Survey	Keystone
McCone	129.69	14.5	Open Water	Field Survey	Keystone
McCone	130.94	14.7	Open Water	Desktop	Keystone
McCone	131.57	14.7	PEM	Field Survey	Keystone
McCone	132.07	50.3	PEM	Field Survey	Keystone
McCone	132.09	28.5	Open Water	Desktop	Keystone
McCone	132.13	21.1	Open Water	Desktop	Keystone
McCone	132.33	18.4	Open Water	Desktop	Keystone
McCone	132.66	15.7	Open Water	Field Survey	Keystone
McCone	134.09	24.2	Open Water	Desktop	Keystone
McCone	135.03	12.2	Open Water	Desktop	Keystone
McCone	135.06	35.4	Open Water	Desktop	NWI
McCone	135.07	7.0	Open Water	Desktop	Keystone
McCone	135.55	71.5	Open Water	Field Survey	Keystone
McCone	136.59	103.5	Open Water	Desktop	NWI
McCone	137.75	15.2	Open Water	Desktop	Keystone
McCone	137.75	12.9	Open Water	Desktop	Keystone
McCone	138.43	6.4	Open Water	Desktop	Keystone
McCone	139.47	25.3	Open Water	Field Survey	Keystone
McCone	139.93	3.4	Open Water	Desktop	Keystone
McCone	140.38	38.2	Open Water	Desktop	Keystone
McCone	141.45	12.2	Open Water	Desktop	Keystone
McCone	142.20	4.4	Open Water	Desktop	Keystone
McCone	142.64	23.5	Open Water	Field Survey	Keystone
Dawson	142.88	11.3	Open Water	Desktop	Keystone
Dawson	144.58	5.6	Open Water	Desktop	Keystone
Dawson	145.03	20.4	Open Water	Desktop	Keystone
Dawson	148.51	10.9	Open Water	Desktop	Keystone
Dawson	148.52	10.5	Open Water	Field Survey	Keystone
Dawson	148.53	50.0	Open Water	Field Survey	Keystone
Dawson	150.12	12.9	Open Water	Desktop	Keystone
Dawson	150.70	135.3	Open Water	Desktop	Keystone
Dawson	151.68	73.0	Open Water	Desktop	Keystone
Dawson	151.82	25.5	Open Water	Desktop	Keystone
Dawson	154.49	9.2	Open Water	Desktop	Keystone
Dawson	154.64	12.1	Open Water	Field Survey	Keystone

Table 10 Montana Wetlands Along Project Route by Milepost

County	Beginning Milepost[a]	Distance Crossed (ft)[b]	Wetland Type[c]	Survey Type[d]	Source[e]
Dawson	154.65	29.5	PSS	Desktop	NLCD2006
Dawson	155.63	30.2	Open Water	Desktop	Keystone
Dawson	155.66	12.4	Open Water	Desktop	Keystone
Dawson	156.45	19.4	Open Water	Desktop	Keystone
Dawson	157.23	21.6	Open Water	Desktop	Keystone
Dawson	157.50	32.1	Open Water	Field Survey	Keystone
Dawson	157.65	21.3	Open Water	Desktop	Keystone
Dawson	157.85	14.7	Open Water	Desktop	Keystone
Dawson	158.36	20.1	Open Water	Desktop	Keystone
Dawson	158.36	31.0	Open Water	Desktop	Keystone
Dawson	158.36	159.6	PEM	Desktop	NLCD2006
Dawson	159.32	26.4	Open Water	Desktop	Keystone
Dawson	160.23	197.2	PSS	Desktop	NLCD2006
Dawson	161.63	168.8	PSS	Desktop	NLCD2006
Dawson	162.35	195.2	PSS	Desktop	NLCD2006
Dawson	163.55	219.9	PSS	Desktop	NLCD2006
Dawson	164.99	59.4	Open Water	Field Survey	Keystone
Dawson	165.03	181.5	PSS	Desktop	NLCD2006
Dawson	165.51	8.0	Open Water	Desktop	Keystone
Dawson	165.74	42.1	Open Water	Desktop	Keystone
Dawson	166.22	27.7	Open Water	Desktop	Keystone
Dawson	166.42	34.3	PSS	Desktop	NLCD2006
Dawson	168.08	16.5	Open Water	Desktop	Keystone
Dawson	168.31	15.1	Open Water	Desktop	Keystone
Dawson	168.55	34.7	Open Water	Desktop	Keystone
Dawson	170.22	21.5	Open Water	Desktop	Keystone
Dawson	170.26	57.1	Open Water	Desktop	Keystone
Dawson	173.09	13.8	Open Water	Desktop	Keystone
Dawson	173.31	26.5	Open Water	Desktop	Keystone
Dawson	176.93	38.1	Open Water	Desktop	Keystone
Dawson	176.98	15.2	Open Water	Desktop	Keystone
Dawson	177.04	19.6	Open Water	Desktop	Keystone
Dawson	177.23	31.4	Open Water	Desktop	Keystone
Dawson	177.31	12.0	Open Water	Desktop	Keystone
Dawson	177.32	17.4	Open Water	Desktop	Keystone
Dawson	177.34	3.4	Open Water	Desktop	Keystone
Dawson	177.52	9.8	Open Water	Desktop	Keystone
Dawson	178.35	19.7	Open Water	Desktop	Keystone
Dawson	178.98	19.7	Open Water	Desktop	Keystone
Dawson	179.26	17.3	Open Water	Desktop	Keystone
Dawson	179.27	19.6	Open Water	Desktop	Keystone
Dawson	180.41	15.1	Open Water	Desktop	Keystone
Dawson	181.57	37.4	Open Water	Desktop	Keystone

Table 10 Montana Wetlands Along Project Route by Milepost

County	Beginning Milepost[a]	Distance Crossed (ft)[b]	Wetland Type[c]	Survey Type[d]	Source[e]
Dawson	181.65	10.3	Open Water	Desktop	Keystone
Dawson	181.73	5.2	Open Water	Field Survey	Keystone
Dawson	182.02	3.6	Open Water	Desktop	Keystone
Dawson	182.28	39.1	Open Water	Desktop	Keystone
Dawson	182.83	5.9	PSS	Desktop	NLCD2006
Dawson	183.46	8.4	Open Water	Desktop	NWI
Dawson	183.72	45.4	Open Water	Field Survey	Keystone
Dawson	183.91	19.2	Open Water	Field Survey	Keystone
Dawson	184.12	22.2	Open Water	Desktop	Keystone
Dawson	184.29	306.9	PSS	Desktop	NLCD2006
Dawson	186.81	44.7	Open Water	Desktop	Keystone
Dawson	187.12	36.0	Open Water	Field Survey	Keystone
Dawson	187.27	14.2	Open Water	Field Survey	Keystone
Dawson	187.37	18.0	Open Water	Desktop	Keystone
Dawson	187.61	3.5	PSS	Desktop	NLCD2006
Dawson	187.69	58.8	Open Water	Field Survey	Keystone
Dawson	187.71	173.3	PEM	Desktop	Keystone
Dawson	188.02	156.3	PSS	Desktop	NLCD2006
Dawson	188.06	717.6	Open Water	Field Survey	Keystone
Prairie	190.20	19.5	Open Water	Desktop	Keystone
Prairie	191.68	9.1	Open Water	Desktop	Keystone
Prairie	194.80	13.5	Open Water	Desktop	Keystone
Prairie	195.19	36.6	Open Water	Desktop	Keystone
Prairie	196.02	16.9	Open Water	Field Survey	Keystone
Prairie	196.03	10.5	Open Water	Desktop	Keystone
Prairie	196.13	7.5	Open Water	Desktop	Keystone
Prairie	196.35	5.3	Open Water	Desktop	Keystone
Prairie	196.51	7.0	Open Water	Desktop	NWI
Prairie	197.04	37.1	Open Water	Desktop	Keystone
Prairie	197.06	19.5	Open Water	Desktop	Keystone
Prairie	197.06	18.0	PEM	Desktop	NWI
Prairie	197.23	33.6	Open Water	Desktop	Keystone
Prairie	197.23	14.9	Open Water	Desktop	Keystone
Prairie	197.75	11.0	Open Water	Desktop	Keystone
Prairie	197.79	28.6	Open Water	Desktop	Keystone
Prairie	197.80	30.2	Open Water	Desktop	Keystone
Prairie	197.81	44.4	Open Water	Field Survey	Keystone
Prairie	197.85	48.5	PEM	Desktop	NWI
Prairie	198.04	105.5	PSS	Desktop	NLCD2006
Prairie	199.92	28.8	PEM	Desktop	NWI
Prairie	200.25	12.0	Open Water	Field Survey	Keystone
Prairie	200.36	38.7	PSS	Desktop	NLCD2006
Prairie	200.42	24.4	Open Water	Desktop	Keystone

Table 10 Montana Wetlands Along Project Route by Milepost

County	Beginning Milepost[a]	Distance Crossed (ft)[b]	Wetland Type[c]	Survey Type[d]	Source[e]
Prairie	201.77	23.3	Open Water	Desktop	Keystone
Prairie	201.87	26.8	PEM	Desktop	NWI
Prairie	202.46	24.4	Open Water	Desktop	Keystone
Prairie	202.54	213.9	PEM	Desktop	NWI
Prairie	203.63	12.3	Open Water	Desktop	Keystone
Prairie	203.63	42.8	Open Water	Desktop	Keystone
Prairie	204.34	16.2	Open Water	Desktop	Keystone
Prairie	204.35	31.7	PEM	Desktop	NWI
Prairie	206.47	19.3	PEM	Field Survey	Keystone
Prairie	207.24	51.9	Open Water	Desktop	Keystone
Prairie	207.74	5.9	Open Water	Field Survey	Keystone
Prairie	209.27	22.2	PEM	Desktop	NWI
Prairie	209.65	13.9	Open Water	Desktop	Keystone
Prairie	209.97	13.9	Open Water	Desktop	Keystone
Prairie	209.98	12.6	Open Water	Desktop	Keystone
Prairie	210.98	31.8	Open Water	Desktop	Keystone
Prairie	211.00	15.5	Open Water	Desktop	Keystone
Fallon	211.00	44.2	Open Water	Desktop	Keystone
Fallon	211.01	19.9	Open Water	Desktop	Keystone
Fallon	211.04	32.2	Open Water	Desktop	Keystone
Fallon	213.54	5.4	PEM	Desktop	NWI
Fallon	213.55	25.3	Open Water	Desktop	Keystone
Fallon	214.21	390.8	PEM	Desktop	NLCD2006
Fallon	214.31	227.6	PEM	Desktop	NLCD2006
Fallon	214.31	33.8	PEM	Field Survey	Keystone
Fallon	214.31	5.2	PEM	Desktop	NWI
Fallon	214.99	16.6	Open Water	Desktop	Keystone
Fallon	215.75	137.6	PEM	Desktop	NLCD2006
Fallon	216.42	29.0	Open Water	Desktop	Keystone
Fallon	216.43	22.3	Open Water	Desktop	Keystone
Fallon	216.43	15.1	PFO	Desktop	NWI
Fallon	216.44	129.9	Open Water	Desktop	Keystone
Fallon	216.97	49.0	Open Water	Desktop	Keystone
Fallon	216.97	82.0	PSS	Desktop	NLCD2006
Fallon	217.30	29.2	PEM	Desktop	NWI
Fallon	218.02	21.6	Open Water	Desktop	Keystone
Fallon	218.36	22.8	Open Water	Desktop	Keystone
Fallon	218.90	594.9	PEM	Desktop	NLCD2006
Fallon	219.45	17.0	PEM	Desktop	NWI
Fallon	221.98	14.3	Open Water	Field Survey	Keystone
Fallon	224.09	26.4	PEM	Desktop	NWI
Fallon	226.45	150.3	PEM	Desktop	NLCD2006
Fallon	228.62	281.7	PSS	Desktop	NLCD2006

Table 10 Montana Wetlands Along Project Route by Milepost

County	Beginning Milepost[a]	Distance Crossed (ft)[b]	Wetland Type[c]	Survey Type[d]	Source[e]
Fallon	228.63	3.3	Open Water	Desktop	Keystone
Fallon	228.64	34.6	Open Water	Field Survey	Keystone
Fallon	228.70	14.8	Open Water	Desktop	Keystone
Fallon	228.88	69.7	Open Water	Desktop	Keystone
Fallon	228.93	77.6	Open Water	Desktop	Keystone
Fallon	228.93	47.7	Open Water	Desktop	Keystone
Fallon	228.93	15.4	PEM	Desktop	NWI
Fallon	228.93	55.8	PSS	Desktop	NLCD2006
Fallon	228.94	11.2	PEM	Desktop	NWI
Fallon	229.33	51.0	Open Water	Desktop	Keystone
Fallon	229.44	20.8	Open Water	Desktop	Keystone
Fallon	229.70	47.8	PSS	Desktop	NLCD2006
Fallon	233.79	31.0	Open Water	Desktop	Keystone
Fallon	233.79	101.5	PEM	Desktop	NLCD2006
Fallon	233.82	17.6	Open Water	Desktop	Keystone
Fallon	234.74	21.0	Open Water	Field Survey	Keystone
Fallon	234.75	17.5	PEM	Desktop	NWI
Fallon	234.86	20.1	Open Water	Desktop	Keystone
Fallon	235.28	5.3	Open Water	Desktop	Keystone
Fallon	235.41	24.7	Open Water	Field Survey	Keystone
Fallon	235.41	10.9	Open Water	Desktop	Keystone
Fallon	235.41	14.9	PEM	Desktop	NWI
Fallon	235.52	18.5	Open Water	Desktop	Keystone
Fallon	235.52	7.2	Open Water	Desktop	Keystone
Fallon	237.44	35.0	Open Water	Field Survey	Keystone
Fallon	238.63	16.8	Open Water	Desktop	Keystone
Fallon	238.65	13.5	Open Water	Desktop	Keystone
Fallon	238.65	15.4	Open Water	Desktop	Keystone
Fallon	240.95	26.3	Open Water	Desktop	Keystone
Fallon	241.65	45.0	Open Water	Field Survey	Keystone
Fallon	243.49	197.6	Open Water	Field Survey	Keystone
Fallon	243.51	23.3	Open Water	Desktop	Keystone
Fallon	243.52	40.6	PEM	Desktop	NWI
Fallon	243.91	2.0	Open Water	Field Survey	Keystone
Fallon	244.82	46.6	PEM	Field Survey	Keystone
Fallon	244.82	9.5	PEM	Desktop	NWI
Fallon	245.06	16.3	Open Water	Desktop	Keystone
Fallon	245.08	32.5	PEM	Desktop	NWI
Fallon	245.09	23.4	PEM	Field Survey	Keystone
Fallon	246.28	13.9	Open Water	Field Survey	Keystone
Fallon	246.65	29.2	PEM	Desktop	NWI
Fallon	247.05	145.1	PEM	Desktop	NLCD2006
Fallon	247.05	9.0	PEM	Desktop	NLCD2006

Table 10 Montana Wetlands Along Project Route by Milepost

County	Beginning Milepost[a]	Distance Crossed (ft)[b]	Wetland Type[c]	Survey Type[d]	Source[e]
Fallon	247.05	200.6	PSS	Desktop	NLCD2006
Fallon	247.51	5.6	PEM	Desktop	NWI
Fallon	248.92	252.1	PEM	Field Survey	Keystone
Fallon	248.98	1.0	PEM	Desktop	NWI
Fallon	248.98	7.4	PEM	Desktop	NWI
Fallon	249.11	57.9	PSS	Desktop	NLCD2006
Fallon	250.43	7.0	Open Water	Desktop	Keystone
Fallon	252.13	4.3	Open Water	Field Survey	Keystone
Fallon	252.95	3.5	Open Water	Desktop	Keystone
Fallon	253.45	39.9	PEM	Field Survey	Keystone
Fallon	254.31	2.1	PEM	Desktop	NWI
Fallon	254.38	29.8	Open Water	Field Survey	Keystone
Fallon	254.84	63.4	Open Water	Desktop	Keystone
Fallon	256.10	28.9	Open Water	Desktop	Keystone
Fallon	256.19	21.6	Open Water	Desktop	Keystone
Fallon	257.44	20.2	Open Water	Desktop	Keystone
Fallon	258.07	21.8	Open Water	Desktop	Keystone
Fallon	258.07	24.6	Open Water	Desktop	Keystone
Fallon	258.07	12.5	PEM	Desktop	NWI
Fallon	259.88	58.1	PEM	Desktop	NWI
Fallon	260.19	75.1	PEM	Desktop	Keystone
Fallon	260.19	161.6	PEM	Desktop	NWI
Fallon	260.20	5.1	Open Water	Desktop	Keystone
Fallon	261.07	18.8	Open Water	Desktop	Keystone
Fallon	261.08	22.3	Open Water	Desktop	Keystone
Fallon	261.08	78.8	PEM	Desktop	NWI
Fallon	261.08	30.6	PEM	Desktop	NWI
Fallon	261.09	8.8	PEM	Desktop	GAP2010
Fallon	261.12	250.9	PEM	Desktop	NWI
Fallon	261.16	48.6	PEM	Desktop	GAP2010
Fallon	261.69	10.5	Open Water	Desktop	Keystone
Fallon	261.69	12.9	PEM	Desktop	GAP2010
Fallon	261.70	12.0	Open Water	Desktop	Keystone
Fallon	261.70	75.1	PEM	Desktop	NWI
Fallon	261.74	20.8	Open Water	Field Survey	Keystone
Fallon	261.74	22.1	Open Water	Field Survey	Keystone
Fallon	262.21	15.6	Open Water	Desktop	Keystone
Fallon	262.23	17.3	Open Water	Desktop	Keystone
Fallon	264.04	25.7	Open Water	Desktop	Keystone
Fallon	264.20	16.9	Open Water	Desktop	Keystone
Fallon	264.21	25.1	PEM	Field Survey	Keystone
Fallon	265.33	4.3	Open Water	Field Survey	Keystone
Fallon	265.75	40.3	PEM	Field Survey	Keystone

Table 10 Montana Wetlands Along Project Route by Milepost

County	Beginning Milepost[a]	Distance Crossed (ft)[b]	Wetland Type[c]	Survey Type[d]	Source[e]
Fallon	267.36	31.9	Open Water	Desktop	Keystone
Fallon	268.57	55.9	Open Water	Desktop	Keystone
Fallon	268.63	8.1	Open Water	Field Survey	Keystone
Fallon	270.10	14.4	Open Water	Desktop	Keystone
Fallon	270.36	28.0	Open Water	Desktop	NWI
Fallon	270.36	62.6	Open Water	Field Survey	Keystone
Fallon	270.73	38.5	Open Water	Desktop	Keystone

Table Notes:

[a] Beginning milepost is the approximate milepost location where the pipeline first intercepts the wetland.

[b] Distance crossed is the linear distance the wetland is intercepted by the pipeline imeasured in feet.

[c] Wetland type is based on Cowardin classification (Cowardin et al. 1979). PEM = palustrine emergent wetland, PSS = palustrine scrub shrub wetland, PFO = palustrine forested wetland.

[d] Survey type indicates whether wetland polygon was mapped during a field survey by Keystone or mapped using desktop methods (aerial photo interpretation or database GIS data).

[e] Source identifies what data source was used to generate the wetland data presented in this table.

Data Sources (see Section 4.4 references): TransCanada Keystone Pipeline, LP (Keystone) (exp Energy Services Inc. 2012a and 2012b) , NWI (USFWS 2012), NLCD 2006 (Fry 2011), GAP 2010 (USGS 2011).

Table 11 Nebraska Wetlands Along Project Route by Milepost

County	Beginning Milepost[a]	Distance Crossed (ft)[b]	Wetland Type[c]	Survey Type[d]	Source[e]
Keya Paha	601.1	13.9	Open Water	Desktop	Keystone
Keya Paha	601.3	24.7	Open Water	Desktop	Keystone
Keya Paha	601.8	8.1	Open Water	Desktop	Keystone
Keya Paha	602.1	78.6	PSS	Desktop	NLCD2006
Keya Paha	603.9	247.6	PEM	Desktop	Keystone
Keya Paha	604.3	100.0	PEM	Desktop	Keystone
Keya Paha	604.4	19.8	Open Water	Desktop	Keystone
Keya Paha	604.4	426.8	PEM	Desktop	Keystone
Keya Paha	605.2	309.3	PEM	Desktop	Keystone
Keya Paha	605.3	12.1	Open Water	Desktop	Keystone
Keya Paha	605.3	53.8	Open Water	Desktop	Keystone
Keya Paha	605.7	68.1	Open Water	Desktop	NWI
Keya Paha	606.2	12.8	Open Water	Desktop	Keystone
Keya Paha	606.2	126.9	PFO	Desktop	Keystone
Keya Paha	607.4	11.2	Open Water	Desktop	Keystone
Keya Paha	607.7	223.8	PFO	Desktop	Keystone
Keya Paha	607.8	129.1	PEM	Desktop	Keystone
Keya Paha	607.8	224.0	PFO	Desktop	Keystone
Keya Paha	609.4	11.9	Open Water	Desktop	Keystone
Keya Paha	610.5	238.9	PEM	Desktop	Keystone
Keya Paha	610.5	19.6	Open Water	Desktop	Keystone
Keya Paha	610.5	79.7	PSS	Desktop	NLCD2006
Keya Paha	610.6	35.2	Open Water	Desktop	Keystone
Keya Paha	612.2	43.6	Open Water	Desktop	Keystone
Keya Paha	612.5	40.5	Open Water	Desktop	Keystone
Keya Paha	612.8	8.0	Open Water	Desktop	Keystone
Keya Paha	613.2	115.3	PSS	Desktop	NLCD2006
Keya Paha	613.7	13.0	Open Water	Desktop	Keystone
Keya Paha	613.7	86.2	Open Water	Desktop	Keystone
Keya Paha	613.7	20.5	Open Water	Desktop	Keystone
Boyd	613.7	180.8	PSS	Desktop	NLCD2006
Keya Paha	613.7	41.2	Open Water	Desktop	Keystone
Keya Paha	613.8	34.5	Open Water	Desktop	Keystone
Keya Paha	613.8	19.1	Open Water	Desktop	Keystone
Boyd	614.1	316.8	Open Water	Desktop	NWI
Boyd	614.8	158.6	Open Water	Desktop	Keystone
Boyd	615.1	89.1	PSS	Desktop	NLCD2006
Boyd	615.6	46.1	Open Water	Desktop	Keystone
Boyd	617.0	518.5	PEM	Desktop	GAP2010
Boyd	618.0	275.1	PEM	Desktop	Keystone
Boyd	618.0	161.8	PEM	Desktop	GAP2010
Boyd	618.1	21.5	PEM	Desktop	Keystone
Boyd	618.2	90.0	PEM	Desktop	Keystone

Table 11 Nebraska Wetlands Along Project Route by Milepost

County	Beginning Milepost[a]	Distance Crossed (ft)[b]	Wetland Type[c]	Survey Type[d]	Source[e]
Boyd	621.2	29.5	PEM	Desktop	GAP2010
Boyd	621.2	76.5	PSS	Desktop	NLCD2006
Boyd	625.0	224.0	PEM	Desktop	NLCD2006
Holt	625.1	1213.4	Open Water	Desktop	Keystone
Holt	625.1	10.0	Open Water	Desktop	Keystone
Holt	625.2	375.5	PFO	Desktop	Keystone
Holt	625.2	13.7	PEM	Desktop	Keystone
Holt	625.2	51.2	Open Water	Desktop	Keystone
Holt	625.2	85.8	PSS	Desktop	NLCD2006
Holt	625.3	11.6	Open Water	Desktop	Keystone
Holt	625.3	243.3	PEM	Desktop	NLCD2006
Holt	625.9	147.8	PEM	Desktop	NLCD2006
Holt	625.9	87.0	PEM	Desktop	NLCD2006
Holt	626.0	27.4	PEM	Desktop	NLCD2006
Holt	626.5	106.8	PEM	Desktop	NLCD2006
Holt	626.8	10.1	Open Water	Desktop	Keystone
Holt	626.8	175.1	PEM	Desktop	NLCD2006
Holt	626.8	268.6	PEM	Desktop	NLCD2006
Holt	626.8	16.8	PEM	Desktop	GAP2010
Holt	628.0	106.0	PEM	Desktop	NLCD2006
Holt	628.5	142.6	PSS	Desktop	NLCD2006
Holt	628.6	10.9	Open Water	Desktop	Keystone
Holt	628.7	221.1	PSS	Desktop	NLCD2006
Holt	628.8	21.8	Open Water	Desktop	Keystone
Holt	628.8	46.6	PEM	Desktop	NLCD2006
Holt	629.5	537.4	PEM	Desktop	GAP2010
Holt	629.8	22.8	PSS	Desktop	NLCD2006
Holt	629.9	253.5	PSS	Desktop	NLCD2006
Holt	630.0	10.6	Open Water	Desktop	Keystone
Holt	630.0	112.3	PEM	Desktop	NWI
Holt	632.7	118.0	PEM	Desktop	GAP2010
Holt	632.7	10.0	Open Water	Desktop	Keystone
Holt	632.7	10.8	Open Water	Desktop	Keystone
Holt	634.8	11.2	Open Water	Desktop	Keystone
Holt	635.1	10.5	Open Water	Desktop	Keystone
Holt	639.5	164.5	Open Water	Desktop	Keystone
Holt	639.5	21.8	Open Water	Desktop	Keystone
Holt	639.9	13.8	Open Water	Field Survey	Keystone
Holt	639.9	6.1	PEM	Field Survey	Keystone
Holt	640.0	10.9	Open Water	Desktop	Keystone
Holt	640.0	17.8	PEM	Field Survey	Keystone
Holt	640.0	10.8	Open Water	Desktop	Keystone
Holt	640.3	31.9	Open Water	Desktop	Keystone
Holt	640.9	11.9	Open Water	Desktop	Keystone
Holt	641.2	39.6	PEM	Field Survey	Keystone

Table 11 Nebraska Wetlands Along Project Route by Milepost

County	Beginning Milepost[a]	Distance Crossed (ft)[b]	Wetland Type[c]	Survey Type[d]	Source[e]
Holt	642.0	65.5	PEM	Field Survey	Keystone
Holt	642.5	12.1	Open Water	Field Survey	Keystone
Holt	646.8	50.7	PEM	Field Survey	Keystone
Holt	649.3	14.5	Open Water	Field Survey	Keystone
Holt	649.3	11.6	PEM	Desktop	NWI
Holt	649.8	50.4	PEM	Desktop	NLCD2006
Holt	652.6	30.8	Open Water	Desktop	Keystone
Holt	652.8	36.5	Open Water	Desktop	Keystone
Holt	653.1	17.0	PEM	Desktop	NLCD2006
Holt	656.5	13.2	Open Water	Desktop	Keystone
Holt	658.5	178.7	PSS	Desktop	NLCD2006
Holt	658.6	10.0	Open Water	Desktop	Keystone
Holt	658.6	42.1	PEM	Desktop	GAP2010
Holt	658.6	41.9	PEM	Desktop	GAP2010
Holt	659.1	2.7	PEM	Desktop	GAP2010
Holt	662.9	139.3	PSS	Desktop	NLCD2006
Holt	663.0	32.5	PEM	Desktop	GAP2010
Holt	663.0	143.3	PSS	Desktop	NLCD2006
Holt	663.0	237.0	PSS	Desktop	NLCD2006
Holt	663.0	11.0	Open Water	Desktop	Keystone
Holt	663.7	10.4	Open Water	Desktop	Keystone
Holt	663.7	37.3	Open Water	Desktop	Keystone
Holt	664.5	10.1	Open Water	Desktop	Keystone
Holt	664.5	4.1	PEM	Desktop	NLCD2006
Holt	664.6	49.4	PFO	Field Survey	Keystone
Holt	664.6	120.0	PEM	Desktop	NLCD2006
Holt	665.2	14.2	Open Water	Field Survey	Keystone
Holt	665.3	67.6	PEM	Desktop	GAP2010
Holt	666.4	12.5	PEM	Desktop	NLCD2006
Holt	666.4	18.0	PEM	Desktop	GAP2010
Holt	666.4	84.2	PEM	Desktop	GAP2010
Holt	666.5	14.1	Open Water	Field Survey	Keystone
Holt	668.0	222.7	PEM	Desktop	GAP2010
Antelope	672.5	107.5	PSS	Desktop	NLCD2006
Antelope	672.9	115.2	PEM	Desktop	NLCD2006
Antelope	675.3	24.2	Open Water	Field Survey	Keystone
Antelope	676.0	27.4	PEM	Field Survey	Keystone
Antelope	678.8	193.1	PEM	Desktop	NLCD2006
Antelope	679.2	334.0	PEM	Desktop	NLCD2006
Antelope	680.0	10.4	Open Water	Desktop	Keystone
Antelope	680.0	9.5	Open Water	Desktop	Keystone
Antelope	680.0	11.0	Open Water	Desktop	Keystone
Antelope	680.1	66.2	PSS	Desktop	NLCD2006
Antelope	680.1	10.2	Open Water	Desktop	Keystone
Antelope	680.1	86.7	PSS	Desktop	NLCD2006

Table 11 Nebraska Wetlands Along Project Route by Milepost

County	Beginning Milepost[a]	Distance Crossed (ft)[b]	Wetland Type[c]	Survey Type[d]	Source[e]
Antelope	680.1	11.2	Open Water	Field Survey	Keystone
Antelope	680.1	5.8	Open Water	Field Survey	Keystone
Antelope	680.2	70.8	Open Water	Field Survey	Keystone
Antelope	681.3	47.3	Open Water	Field Survey	Keystone
Antelope	683.0	66.3	PEM	Desktop	NWI
Antelope	683.1	357.9	Open Water	Field Survey	Keystone
Antelope	683.1	249.9	Open Water	Desktop	NWI
Antelope	683.1	119.0	PEM	Desktop	NWI
Antelope	683.2	14.6	Open Water	Desktop	Keystone
Antelope	683.5	29.8	Open Water	Desktop	Keystone
Antelope	685.1	11.6	Open Water	Desktop	Keystone
Antelope	686.9	10.2	Open Water	Desktop	Keystone
Antelope	696.9	10.0	Open Water	Desktop	Keystone
Antelope	697.0	27.7	Open Water	Field Survey	Keystone
Antelope	704.3	77.8	Open Water	Desktop	Keystone
Boone	705.2	16.0	Open Water	Field Survey	Keystone
Boone	705.4	155.4	Open Water	Desktop	NWI
Boone	705.4	84.1	Open Water	Field Survey	Keystone
Boone	709.4	45.9	Open Water	Field Survey	Keystone
Boone	713.2	20.0	Open Water	Desktop	Keystone
Boone	713.3	7.7	Open Water	Desktop	Keystone
Boone	713.3	146.4	Open Water	Desktop	Keystone
Boone	714.5	13.3	Open Water	Field Survey	Keystone
Boone	716.5	29.4	Open Water	Field Survey	Keystone
Boone	716.8	18.5	Open Water	Field Survey	Keystone
Boone	716.9	56.5	Open Water	Field Survey	Keystone
Boone	717.0	64.4	PSS	Desktop	NLCD2006
Boone	717.5	178.1	PFO	Desktop	NWI
Boone	718.5	31.4	PSS	Desktop	NLCD2006
Boone	721.7	10.0	Open Water	Field Survey	Keystone
Boone	725.2	23.1	Open Water	Field Survey	Keystone
Boone	727.8	115.6	PEM	Field Survey	Keystone
Boone	731.1	221.4	PSS	Desktop	NLCD2006
Boone	731.3	31.5	Open Water	Field Survey	Keystone
Boone	735.7	40.6	Open Water	Field Survey	Keystone
Boone	736.1	54.6	Open Water	Desktop	Keystone
Boone	737.3	61.1	Open Water	Desktop	Keystone
Boone	739.3	18.9	Open Water	Desktop	Keystone
Boone	740.2	33.5	Open Water	Desktop	Keystone
Nance	740.4	30.3	Open Water	Desktop	Keystone
Nance	743.8	111.0	PSS	Desktop	NLCD2006
Nance	743.8	15.9	Open Water	Desktop	Keystone
Nance	743.8	177.5	PSS	Desktop	NLCD2006
Nance	743.8	86.0	PSS	Desktop	NLCD2006
Nance	744.4	605.7	PFO	Desktop	NWI

Table 11 Nebraska Wetlands Along Project Route by Milepost

County	Beginning Milepost[a]	Distance Crossed (ft)[b]	Wetland Type[c]	Survey Type[d]	Source[e]
Nance	744.5	237.3	Open Water	Desktop	NWI
Nance	744.5	99.3	PFO	Desktop	NWI
Nance	744.5	77.2	PSS	Desktop	Keystone
Nance	748.6	29.0	Open Water	Desktop	NWI
Nance	748.8	37.7	Open Water	Field Survey	Keystone
Nance	749.6	180.4	Open Water	Desktop	NWI
Nance	749.7	850.0	Open Water	Desktop	Keystone
Nance	750.0	10.3	Open Water	Desktop	Keystone
Nance	750.4	10.3	Open Water	Desktop	Keystone
Nance	759.6	39.0	Open Water	Desktop	Keystone
Nance	760.1	50.8	Open Water	Desktop	Keystone
Nance	760.1	80.9	PSS	Desktop	NLCD2006
Nance	761.3	36.9	Open Water	Desktop	Keystone
Nance	761.4	16.1	Open Water	Desktop	Keystone
Nance	761.4	71.4	Open Water	Desktop	Keystone
Nance	761.5	31.1	PEM	Desktop	NLCD2006
Nance	761.5	10.2	PEM	Desktop	Keystone
Nance	761.6	19.6	Open Water	Desktop	Keystone
Nance	761.6	425.6	PEM	Desktop	Keystone
Nance	761.6	223.4	PEM	Desktop	NLCD2006
Nance	761.6	154.5	PEM	Desktop	Keystone
Nance	761.6	10.0	Open Water	Desktop	Keystone
Nance	761.8	11.7	Open Water	Desktop	Keystone
Nance	761.9	76.5	Open Water	Desktop	Keystone
Nance	762.0	232.6	PEM	Desktop	GAP2010
Nance	762.2	60.5	PEM	Desktop	GAP2010
Nance	762.5	456.8	PEM	Desktop	GAP2010
Merrick	762.8	12.1	Open Water	Desktop	Keystone
Merrick	763.5	10.1	Open Water	Desktop	Keystone
Merrick	763.7	8.8	Open Water	Desktop	Keystone
Merrick	765.3	10.0	Open Water	Desktop	Keystone
Merrick	765.3	12.5	Open Water	Desktop	Keystone
Merrick	765.3	9.8	Open Water	Desktop	Keystone
Merrick	765.3	12.9	Open Water	Desktop	Keystone
Merrick	765.4	14.3	Open Water	Desktop	Keystone
Merrick	765.5	10.4	Open Water	Desktop	Keystone
Merrick	765.7	57.6	PSS	Desktop	NLCD2006
Merrick	766.5	10.1	Open Water	Desktop	Keystone
Merrick	766.6	126.3	PSS	Desktop	NLCD2006
Merrick	766.7	161.1	PEM	Desktop	Keystone
Merrick	766.8	1639.0	PSS	Desktop	NLCD2006
Merrick	766.8	10.7	Open Water	Desktop	Keystone
Merrick	770.0	10.0	Open Water	Desktop	Keystone
Merrick	770.2	10.1	Open Water	Desktop	Keystone
Merrick	771.5	191.6	PFO	Desktop	Keystone

Table 11 Nebraska Wetlands Along Project Route by Milepost

County	Beginning Milepost[a]	Distance Crossed (ft)[b]	Wetland Type[c]	Survey Type[d]	Source[e]
Merrick	771.8	24.9	PEM	Desktop	Keystone
Merrick	772.3	31.7	Open Water	Desktop	Keystone
Merrick	772.5	79.2	PEM	Desktop	Keystone
Merrick	773.3	39.9	Open Water	Desktop	Keystone
Merrick	773.6	350.5	PFO	Desktop	Keystone
Polk	773.9	151.1	PEM	Desktop	Keystone
Polk	773.9	88.4	Open Water	Desktop	Keystone
Polk	774.6	121.9	PFO	Desktop	Keystone
Polk	774.6	59.3	Open Water	Desktop	NWI
Polk	774.6	108.2	Open Water	Desktop	Keystone
Polk	774.7	414.2	PFO	Desktop	Keystone
Polk	774.8	10.1	Open Water	Desktop	Keystone
Polk	774.8	50.3	PEM	Desktop	Keystone
Polk	774.9	359.0	Open Water	Desktop	Keystone
Polk	774.9	176.5	PFO	Desktop	Keystone
Polk	775.0	10.2	Open Water	Desktop	Keystone
Polk	775.0	928.0	PFO	Desktop	Keystone
Polk	775.0	59.2	PFO	Desktop	Keystone
Polk	775.0	15.6	Open Water	Desktop	Keystone
Polk	775.0	94.8	PSS	Desktop	NLCD2006
Polk	775.0	10.6	Open Water	Desktop	Keystone
Polk	775.0	11.1	Open Water	Desktop	Keystone
Polk	775.0	10.0	Open Water	Desktop	Keystone
Polk	775.1	10.6	Open Water	Desktop	Keystone
York	775.2	21.4	Open Water	Desktop	Keystone
York	775.2	14.8	Open Water	Desktop	Keystone
York	775.2	10.0	Open Water	Desktop	Keystone
York	775.2	15.5	Open Water	Desktop	Keystone
York	775.2	10.9	Open Water	Desktop	Keystone
York	775.3	11.1	Open Water	Desktop	Keystone
York	775.3	17.2	PEM	Desktop	NLCD2006
York	775.4	33.5	Open Water	Field Survey	Keystone
York	775.5	51.3	PEM	Desktop	NLCD2006
York	775.5	36.4	PSS	Desktop	NLCD2006
York	775.6	32.8	Open Water	Field Survey	Keystone
York	775.6	21.0	PEM	Field Survey	Keystone
York	775.6	3.3	Open Water	Field Survey	Keystone
York	776.1	4.0	Open Water	Field Survey	Keystone
York	777.3	9.0	Open Water	Field Survey	Keystone
York	784.7	37.4	Open Water	Desktop	NWI
York	785.6	11.4	Open Water	Field Survey	Keystone
York	788.9	5.0	Open Water	Field Survey	Keystone
York	790.6	18.8	Open Water	Desktop	Keystone
York	792.0	28.1	Open Water	Desktop	NWI
York	792.7	44.7	Open Water	Field Survey	Keystone

Table 11 Nebraska Wetlands Along Project Route by Milepost

County	Beginning Milepost[a]	Distance Crossed (ft)[b]	Wetland Type[c]	Survey Type[d]	Source[e]
York	793.1	63.4	PSS	Desktop	NLCD2006
York	795.1	26.6	Open Water	Desktop	Keystone
York	796.0	17.3	Open Water	Desktop	Keystone
Fillmore	797.8	18.1	Open Water	Field Survey	Keystone
Fillmore	798.1	17.4	Open Water	Desktop	NWI
Fillmore	798.1	54.8	Open Water	Desktop	Keystone
Fillmore	799.0	20.7	Open Water	Desktop	NWI
Fillmore	801.2	27.2	Open Water	Desktop	Keystone
Fillmore	803.3	8.2	Open Water	Field Survey	Keystone
Fillmore	805.3	19.2	Open Water	Desktop	Keystone
Fillmore	805.6	15.0	Open Water	Field Survey	Keystone
Fillmore	806.2	83.6	PSS	Desktop	NLCD2006
Fillmore	809.4	53.1	Open Water	Field Survey	Keystone
Fillmore	809.4	12.7	Open Water	Desktop	Keystone
Saline	810.6	67.4	PEM	Desktop	NWI
Saline	811.4	15.4	Open Water	Field Survey	Keystone
Saline	812.8	8.2	PEM	Field Survey	Keystone
Saline	812.8	6.3	Open Water	Field Survey	Keystone
Saline	812.8	57.8	PEM	Field Survey	Keystone
Saline	813.1	336.5	PEM	Field Survey	Keystone
Saline	814.5	31.0	Open Water	Field Survey	Keystone
Saline	818.3	33.5	Open Water	Desktop	Keystone
Saline	822.7	19.6	Open Water	Field Survey	Keystone
Saline	822.7	27.9	Open Water	Desktop	Keystone
Saline	822.7	20.7	Open Water	Desktop	Keystone
Saline	824.8	166.2	PSS	Desktop	NLCD2006
Saline	825.8	11.1	Open Water	Desktop	Keystone
Saline	829.6	12.8	Open Water	Desktop	Keystone
Saline	830.8	10.1	Open Water	Desktop	Keystone
Jefferson	831.8	14.8	Open Water	Desktop	Keystone
Jefferson	831.8	10.6	Open Water	Desktop	Keystone
Jefferson	831.8	10.7	Open Water	Desktop	Keystone
Jefferson	832.2	11.7	Open Water	Desktop	Keystone
Jefferson	832.8	22.4	Open Water	Desktop	Keystone
Jefferson	833.3	10.1	Open Water	Desktop	Keystone
Jefferson	836.4	10.2	Open Water	Desktop	Keystone
Jefferson	836.4	11.5	Open Water	Desktop	Keystone
Jefferson	836.4	10.3	Open Water	Desktop	Keystone
Jefferson	836.9	10.9	Open Water	Desktop	Keystone
Jefferson	838.4	81.8	Open Water	Desktop	Keystone
Jefferson	838.6	31.2	Open Water	Desktop	Keystone
Jefferson	839.6	36.3	Open Water	Field Survey	Keystone
Jefferson	840.3	92.9	Open Water	Desktop	NWI
Jefferson	840.7	71.3	Open Water	Desktop	NWI
Jefferson	840.8	26.8	Open Water	Desktop	Keystone

Table 11 Nebraska Wetlands Along Project Route by Milepost

County	Beginning Milepost[a]	Distance Crossed (ft)[b]	Wetland Type[c]	Survey Type[d]	Source[e]
Jefferson	842.6	128.5	PFO	Desktop	NWI
Jefferson	844.8	25.4	Open Water	Field Survey	Keystone
Jefferson	846.3	16.0	Open Water	Desktop	Keystone
Jefferson	847.8	23.4	Open Water	Desktop	Keystone
Jefferson	848.4	29.5	Open Water	Desktop	Keystone
Jefferson	849.0	25.8	Open Water	Desktop	Keystone
Jefferson	849.4	16.5	Open Water	Desktop	Keystone
Jefferson	849.8	23.3	Open Water	Desktop	Keystone
Jefferson	849.8	17.0	Open Water	Desktop	Keystone
Jefferson	850.5	26.5	Open Water	Desktop	Keystone
Jefferson	851.8	32.2	Open Water	Desktop	Keystone
Jefferson	853.0	18.8	Open Water	Desktop	Keystone
Jefferson	853.3	3.1	Open Water	Field Survey	Keystone
Jefferson	856.5	20.2	Open Water	Field Survey	Keystone
Jefferson	856.6	14.2	Open Water	Field Survey	Keystone
Jefferson	856.6	15.4	Open Water	Field Survey	Keystone
Jefferson	857.7	6.5	Open Water	Field Survey	Keystone
Jefferson	859.1	39.0	Open Water	Desktop	NWI

Table Notes:

[a] Beginning milepost is the approximate milepost location where the pipeline first intercepts the wetland.

[b] Distance crossed is the linear distance the wetland is intercepted by the pipeline imeasured in feet.

[c] Wetland type is based on Cowardin classification (Cowardin et al. 1979). PEM = palustrine emergent wetland, PSS = palustrine scrub shrub wetland, PFO = palustrine forested wetland.

[d] Survey type indicates whether wetland polygon was mapped during a field survey by Keystone or mapped using desktop methods (aerial photo interpretation or database GIS data).

[e] Source identifies what data source was used to generate the wetland data presented in this table.

Data Sources (see Section 4.4 references): TransCanada Keystone Pipeline, LP (Keystone) (exp Energy Services Inc. 2012a and 2012b) , NWI (USFWS 2012), NLCD 2006 (Fry 2011), GAP 2010 (USGS 2011).

Table 12 South Dakota Wetlands Along Project Route by Milepost

County	Beginning Milepost[a]	Distance Crossed (ft)[b]	Wetland Type[c]	Survey Type[d]	Source[e]
Harding	286.6	27.4	Open Water	Field Survey	Keystone
Harding	292.3	10.7	PSS	Desktop	NLCD2006
Harding	292.3	195.0	PEM	Field Survey	Keystone
Harding	292.3	1.3	PSS	Desktop	NLCD2006
Harding	292.4	40.1	PSS	Desktop	NLCD2006
Harding	292.4	35.9	PEM	Desktop	GAP2010
Harding	292.4	151.3	PEM	Desktop	NWI
Harding	292.6	19.5	PEM	Desktop	Keystone
Harding	292.6	24.0	Open Water	Field Survey	Keystone
Harding	292.6	62.4	PEM	Desktop	Keystone
Harding	293.6	40.8	Open Water	Desktop	Keystone
Harding	293.6	21.2	PEM	Desktop	Keystone
Harding	293.6	24.8	PEM	Desktop	Keystone
Harding	295.0	64.3	PEM	Desktop	Keystone
Harding	295.0	102.9	Open Water	Field Survey	Keystone
Harding	295.0	2.1	PEM	Desktop	NLCD2006
Harding	295.1	3.5	Open Water	Desktop	NWI
Harding	295.1	67.3	PEM	Desktop	Keystone
Harding	295.4	12.7	Open Water	Desktop	Keystone
Harding	296.9	17.8	Open Water	Field Survey	Keystone
Harding	297.6	45.7	Open Water	Desktop	Keystone
Harding	297.8	58.6	Open Water	Desktop	Keystone
Harding	297.9	30.0	Open Water	Desktop	Keystone
Harding	298.2	38.8	Open Water	Desktop	Keystone
Harding	298.4	226.8	PEM	Desktop	NLCD2006
Harding	298.4	14.2	Open Water	Field Survey	Keystone
Harding	298.4	37.9	Open Water	Desktop	Keystone
Harding	298.9	31.8	Open Water	Desktop	Keystone
Harding	299.2	16.5	Open Water	Field Survey	Keystone
Harding	300.0	29.8	Open Water	Desktop	Keystone
Harding	300.4	109.2	PEM	Desktop	Keystone
Harding	300.4	238.7	PEM	Desktop	NLCD2006
Harding	300.4	36.6	Open Water	Desktop	Keystone
Harding	303.2	17.6	PEM	Desktop	Keystone
Harding	303.4	37.6	Open Water	Desktop	Keystone
Harding	303.5	39.1	Open Water	Desktop	Keystone
Harding	303.5	12.4	PEM	Desktop	Keystone
Harding	304.8	65.5	Open Water	Desktop	Keystone
Harding	305.2	17.5	Open Water	Desktop	Keystone
Harding	306.3	89.7	PEM	Desktop	GAP2010
Harding	306.4	49.7	Open Water	Desktop	Keystone
Harding	307.0	173.9	Open Water	Desktop	Keystone
Harding	307.2	27.1	Open Water	Desktop	Keystone
Harding	307.8	56.5	Open Water	Desktop	Keystone

Table 12 South Dakota Wetlands Along Project Route by Milepost

County	Beginning Milepost[a]	Distance Crossed (ft)[b]	Wetland Type[c]	Survey Type[d]	Source[e]
Harding	309.1	33.9	Open Water	Desktop	Keystone
Harding	309.7	25.9	Open Water	Desktop	Keystone
Harding	311.2	19.2	Open Water	Desktop	Keystone
Harding	311.3	28.9	Open Water	Desktop	Keystone
Harding	311.7	28.9	Open Water	Field Survey	Keystone
Harding	312.7	279.2	PEM	Field Survey	Keystone
Harding	314.0	84.5	PEM	Field Survey	Keystone
Harding	316.2	16.5	Open Water	Desktop	Keystone
Harding	316.2	102.7	Open Water	Desktop	NWI
Harding	320.0	13.4	PEM	Field Survey	Keystone
Harding	320.3	131.0	Open Water	Desktop	NWI
Harding	320.5	33.2	Open Water	Desktop	Keystone
Harding	320.5	32.6	Open Water	Field Survey	Keystone
Harding	321.4	46.2	Open Water	Desktop	Keystone
Harding	321.6	10.0	Open Water	Field Survey	Keystone
Harding	321.6	205.4	PEM	Desktop	NWI
Harding	326.4	28.9	Open Water	Desktop	Keystone
Harding	329.5	5.2	PEM	Field Survey	Keystone
Harding	329.5	241.6	PSS	Desktop	NLCD2006
Harding	332.3	23.8	Open Water	Desktop	Keystone
Harding	332.4	20.9	Open Water	Field Survey	Keystone
Harding	332.4	31.0	Open Water	Field Survey	Keystone
Harding	332.7	38.3	Open Water	Field Survey	Keystone
Harding	338.8	41.7	Open Water	Desktop	NWI
Harding	339.2	217.4	PSS	Desktop	NLCD2006
Harding	340.8	74.2	Open Water	Desktop	Keystone
Harding	340.8	105.9	Open Water	Desktop	Keystone
Harding	343.0	55.3	Open Water	Desktop	Keystone
Harding	343.1	39.0	Open Water	Desktop	Keystone
Harding	344.0	24.6	Open Water	Desktop	Keystone
Harding	345.2	149.7	Open Water	Desktop	NWI
Harding	346.8	122.0	Open Water	Desktop	NWI
Harding	347.1	195.8	PEM	Field Survey	Keystone
Harding	349.8	44.4	Open Water	Field Survey	Keystone
Harding	351.7	21.7	Open Water	Desktop	Keystone
Harding	351.7	39.3	Open Water	Desktop	Keystone
Harding	351.8	133.8	Open Water	Desktop	Keystone
Harding	352.1	21.0	Open Water	Desktop	Keystone
Harding	352.4	77.2	Open Water	Desktop	Keystone
Harding	352.9	36.5	Open Water	Desktop	Keystone
Harding	353.4	81.1	Open Water	Desktop	Keystone
Harding	353.7	22.9	Open Water	Desktop	Keystone
Harding	353.7	4.6	Open Water	Field Survey	Keystone
Harding	354.9	15.6	Open Water	Desktop	Keystone

Table 12 South Dakota Wetlands Along Project Route by Milepost

County	Beginning Milepost[a]	Distance Crossed (ft)[b]	Wetland Type[c]	Survey Type[d]	Source[e]
Butte	356.2	69.5	PEM	Desktop	Keystone
Butte	356.3	156.1	Open Water	Desktop	NWI
Butte	357.1	230.5	Open Water	Desktop	NWI
Butte	358.1	297.0	Open Water	Desktop	NWI
Butte	359.1	109.1	Open Water	Field Survey	Keystone
Butte	359.8	50.1	Open Water	Desktop	NWI
Butte	360.0	37.9	Open Water	Desktop	Keystone
Butte	360.8	91.2	Open Water	Desktop	NWI
Butte	361.0	160.5	PEM	Desktop	NWI
Butte	361.0	37.3	Open Water	Desktop	Keystone
Perkins	361.6	17.7	Open Water	Field Survey	Keystone
Perkins	361.8	18.5	Open Water	Desktop	Keystone
Perkins	361.8	29.2	Open Water	Desktop	Keystone
Perkins	362.0	30.2	Open Water	Desktop	Keystone
Perkins	363.5	63.6	Open Water	Desktop	Keystone
Perkins	365.6	52.6	Open Water	Desktop	Keystone
Perkins	365.7	118.2	Open Water	Field Survey	Keystone
Perkins	366.3	261.1	PSS	Desktop	NLCD2006
Perkins	367.2	30.8	Open Water	Desktop	Keystone
Meade	368.2	13.8	PEM	Desktop	Keystone
Meade	368.9	24.0	Open Water	Desktop	Keystone
Meade	368.9	26.1	PEM	Desktop	Keystone
Meade	370.6	3.0	Open Water	Field Survey	Keystone
Meade	378.2	20.7	Open Water	Field Survey	Keystone
Meade	378.2	44.0	Open Water	Field Survey	Keystone
Meade	378.2	38.8	PEM	Desktop	Keystone
Meade	380.8	82.1	Open Water	Desktop	Keystone
Meade	383.2	10.9	PEM	Desktop	Keystone
Meade	387.8	24.3	Open Water	Desktop	Keystone
Meade	387.8	17.7	Open Water	Desktop	Keystone
Meade	388.1	26.4	Open Water	Desktop	Keystone
Meade	388.1	42.5	PEM	Desktop	Keystone
Meade	388.1	23.2	Open Water	Desktop	Keystone
Meade	388.1	6.7	Open Water	Desktop	Keystone
Meade	388.1	28.5	Open Water	Desktop	Keystone
Meade	388.5	13.8	PEM	Desktop	Keystone
Meade	389.4	20.9	Open Water	Desktop	Keystone
Meade	396.3	36.6	PEM	Desktop	Keystone
Meade	397.3	31.8	Open Water	Desktop	Keystone
Meade	398.5	7.0	Open Water	Desktop	Keystone
Meade	398.5	44.3	PEM	Desktop	Keystone
Meade	398.8	23.6	Open Water	Desktop	Keystone
Meade	399.0	57.9	PEM	Desktop	Keystone
Meade	399.1	27.1	Open Water	Desktop	Keystone

Table 12 South Dakota Wetlands Along Project Route by Milepost

County	Beginning Milepost[a]	Distance Crossed (ft)[b]	Wetland Type[c]	Survey Type[d]	Source[e]
Meade	399.7	47.2	PEM	Desktop	Keystone
Meade	399.9	20.3	Open Water	Desktop	Keystone
Meade	400.0	25.9	Open Water	Desktop	Keystone
Meade	400.0	18.3	Open Water	Desktop	Keystone
Meade	400.3	15.1	Open Water	Desktop	Keystone
Meade	400.9	62.3	Open Water	Field Survey	Keystone
Meade	400.9	68.6	Open Water	Field Survey	Keystone
Meade	400.9	140.9	PSS	Desktop	NLCD2006
Meade	401.2	56.9	PSS	Desktop	NLCD2006
Meade	402.0	594.4	PSS	Desktop	NLCD2006
Meade	402.2	1232.7	PSS	Desktop	NLCD2006
Meade	402.8	106.6	PEM	Desktop	NWI
Meade	403.3	6.4	Open Water	Field Survey	Keystone
Meade	404.1	20.9	Open Water	Desktop	Keystone
Meade	404.1	279.6	PEM	Desktop	NLCD2006
Meade	404.1	160.2	PEM	Desktop	NLCD2006
Meade	404.2	81.1	PEM	Desktop	NLCD2006
Meade	404.4	194.0	PEM	Desktop	NLCD2006
Meade	404.4	10.3	Open Water	Desktop	Keystone
Meade	408.7	32.3	Open Water	Field Survey	Keystone
Meade	410.9	278.6	PEM	Desktop	NLCD2006
Meade	411.9	40.7	Open Water	Desktop	Keystone
Meade	412.1	7.8	Open Water	Desktop	Keystone
Meade	412.1	201.4	PSS	Desktop	NLCD2006
Meade	412.3	16.5	Open Water	Field Survey	Keystone
Meade	412.4	82.1	PEM	Desktop	Keystone
Meade	412.8	22.8	Open Water	Desktop	Keystone
Meade	413.0	10.1	Open Water	Desktop	Keystone
Meade	413.4	13.1	Open Water	Desktop	Keystone
Meade	413.8	31.6	Open Water	Desktop	Keystone
Meade	423.9	23.3	Open Water	Field Survey	Keystone
Meade	423.9	10.1	Open Water	Desktop	Keystone
Meade	423.9	8.9	Open Water	Desktop	Keystone
Meade	424.0	52.4	Open Water	Desktop	Keystone
Meade	424.9	131.0	PEM	Desktop	NLCD2006
Meade	425.5	70.9	PEM	Desktop	NLCD2006
Meade	427.1	113.8	PSS	Desktop	NLCD2006
Meade	427.7	404.1	PEM	Desktop	NLCD2006
Meade	428.0	313.4	Open Water	Desktop	Keystone
Meade	428.1	421.6	PEM	Desktop	Keystone
Meade	428.2	267.8	Open Water	Desktop	Keystone
Meade	428.2	47.0	PSS	Desktop	Keystone
Meade	429.1	693.7	Open Water	Desktop	NWI
Pennington	429.6	449.7	PEM	Desktop	Keystone

Table 12 South Dakota Wetlands Along Project Route by Milepost

County	Beginning Milepost[a]	Distance Crossed (ft)[b]	Wetland Type[c]	Survey Type[d]	Source[e]
Pennington	429.7	112.7	PEM	Desktop	NLCD2006
Pennington	429.7	12.5	Open Water	Desktop	Keystone
Pennington	429.8	11.2	Open Water	Desktop	Keystone
Haakon	429.8	34.4	Open Water	Field Survey	Keystone
Haakon	429.9	302.1	PSS	Desktop	NLCD2006
Haakon	430.0	91.0	PEM	Desktop	Keystone
Haakon	430.0	32.0	PEM	Desktop	Keystone
Haakon	430.0	26.9	PEM	Desktop	Keystone
Haakon	430.2	60.3	PEM	Desktop	NWI
Haakon	430.3	13.0	Open Water	Desktop	Keystone
Haakon	430.3	135.4	PEM	Desktop	NWI
Haakon	430.8	19.8	Open Water	Desktop	Keystone
Haakon	433.6	24.2	Open Water	Desktop	Keystone
Haakon	433.6	16.5	Open Water	Desktop	Keystone
Haakon	437.9	48.2	Open Water	Field Survey	Keystone
Haakon	437.9	12.7	Open Water	Field Survey	Keystone
Haakon	437.9	24.5	Open Water	Desktop	Keystone
Haakon	439.0	24.5	PEM	Desktop	Keystone
Haakon	440.4	82.0	Open Water	Field Survey	Keystone
Haakon	441.5	108.7	PEM	Desktop	Keystone
Haakon	442.6	22.5	Open Water	Desktop	Keystone
Haakon	443.1	28.9	Open Water	Desktop	Keystone
Haakon	445.8	24.1	Open Water	Desktop	Keystone
Haakon	448.3	63.9	Open Water	Desktop	Keystone
Haakon	448.5	237.7	PEM	Desktop	NLCD2006
Haakon	449.7	102.6	PEM	Field Survey	Keystone
Haakon	452.9	189.8	PEM	Desktop	NWI
Haakon	452.9	81.9	Open Water	Field Survey	Keystone
Haakon	452.9	26.9	Open Water	Desktop	Keystone
Haakon	454.5	200.0	Open Water	Field Survey	Keystone
Haakon	459.6	32.9	Open Water	Desktop	Keystone
Haakon	459.8	86.0	Open Water	Field Survey	Keystone
Haakon	460.5	24.0	Open Water	Desktop	Keystone
Haakon	461.3	25.0	Open Water	Desktop	Keystone
Haakon	462.0	29.3	Open Water	Desktop	Keystone
Haakon	464.9	30.6	Open Water	Field Survey	Keystone
Haakon	465.3	13.8	Open Water	Desktop	Keystone
Haakon	465.3	41.1	PEM	Desktop	NWI
Haakon	466.0	84.2	PEM	Field Survey	Keystone
Haakon	469.4	379.0	PSS	Desktop	NLCD2006
Haakon	469.4	26.2	PSS	Desktop	NLCD2006
Haakon	472.8	126.6	PSS	Desktop	NLCD2006
Haakon	475.1	52.0	Open Water	Field Survey	Keystone
Haakon	477.1	35.7	Open Water	Desktop	Keystone

Table 12 South Dakota Wetlands Along Project Route by Milepost

County	Beginning Milepost[a]	Distance Crossed (ft)[b]	Wetland Type[c]	Survey Type[d]	Source[e]
Haakon	478.6	25.1	Open Water	Desktop	Keystone
Haakon	479.2	64.3	Open Water	Desktop	Keystone
Jones	483.7	32.0	Open Water	Desktop	Keystone
Jones	485.3	16.7	Open Water	Desktop	Keystone
Jones	485.3	57.3	Open Water	Desktop	Keystone
Jones	485.3	111.1	Open Water	Desktop	Keystone
Jones	485.3	58.9	Open Water	Desktop	Keystone
Jones	485.9	75.9	PEM	Desktop	NWI
Jones	485.9	19.5	Open Water	Field Survey	Keystone
Jones	486.0	49.2	Open Water	Desktop	Keystone
Jones	486.4	19.1	PEM	Field Survey	Keystone
Jones	487.3	16.1	Open Water	Field Survey	Keystone
Jones	487.4	12.4	Open Water	Field Survey	Keystone
Jones	490.1	49.1	Open Water	Desktop	Keystone
Jones	491.1	154.1	PSS	Desktop	NLCD2006
Jones	491.3	31.0	Open Water	Desktop	Keystone
Jones	492.6	66.7	Open Water	Desktop	Keystone
Jones	492.8	13.2	Open Water	Field Survey	Keystone
Jones	495.3	176.3	PSS	Desktop	NLCD2006
Jones	496.6	35.2	PEM	Field Survey	Keystone
Jones	496.9	77.3	Open Water	Desktop	Keystone
Jones	497.2	24.0	Open Water	Field Survey	Keystone
Jones	498.3	25.9	Open Water	Desktop	Keystone
Jones	499.1	29.5	Open Water	Desktop	Keystone
Jones	501.2	149.0	Open Water	Desktop	Keystone
Jones	501.8	22.6	Open Water	Desktop	Keystone
Jones	503.4	39.7	Open Water	Desktop	Keystone
Jones	505.4	33.2	Open Water	Desktop	Keystone
Jones	506.2	58.7	Open Water	Desktop	Keystone
Jones	506.2	26.6	Open Water	Desktop	Keystone
Jones	507.4	49.0	Open Water	Desktop	Keystone
Jones	508.1	55.1	Open Water	Desktop	Keystone
Jones	509.9	31.8	Open Water	Desktop	Keystone
Jones	509.9	20.7	Open Water	Desktop	Keystone
Jones	509.9	103.3	PEM	Desktop	Keystone
Jones	510.0	97.4	PEM	Desktop	Keystone
Jones	510.6	38.7	Open Water	Desktop	Keystone
Jones	511.2	52.4	Open Water	Desktop	Keystone
Jones	511.2	85.1	Open Water	Desktop	Keystone
Jones	511.3	68.0	PEM	Desktop	NWI
Jones	512.3	36.8	Open Water	Desktop	Keystone
Jones	517.5	38.9	Open Water	Desktop	Keystone
Jones	518.1	59.5	Open Water	Desktop	Keystone
Lyman	518.7	369.8	PEM	Desktop	NWI

Table 12 South Dakota Wetlands Along Project Route by Milepost

County	Beginning Milepost[a]	Distance Crossed (ft)[b]	Wetland Type[c]	Survey Type[d]	Source[e]
Lyman	518.9	15.4	Open Water	Field Survey	Keystone
Lyman	518.9	43.4	Open Water	Desktop	Keystone
Lyman	519.5	70.1	Open Water	Desktop	Keystone
Lyman	521.7	9.0	Open Water	Desktop	Keystone
Lyman	521.7	10.8	Open Water	Desktop	Keystone
Lyman	521.7	6.6	Open Water	Desktop	Keystone
Lyman	523.7	93.6	PSS	Desktop	NLCD2006
Lyman	524.9	488.0	Open Water	Field Survey	Keystone
Tripp	526.6	136.6	PSS	Desktop	Keystone
Tripp	527.0	200.6	PEM	Desktop	NLCD2006
Tripp	528.0	205.5	PSS	Desktop	NLCD2006
Tripp	528.0	1.3	Open Water	Field Survey	Keystone
Tripp	528.1	95.7	Open Water	Desktop	Keystone
Tripp	531.0	4.7	Open Water	Desktop	Keystone
Tripp	534.4	8.1	Open Water	Desktop	Keystone
Tripp	535.2	137.6	Open Water	Desktop	Keystone
Tripp	537.5	192.8	Open Water	Desktop	Keystone
Tripp	540.3	20.4	Open Water	Desktop	Keystone
Tripp	540.5	33.1	Open Water	Desktop	Keystone
Tripp	540.8	31.3	Open Water	Desktop	Keystone
Tripp	541.2	33.8	Open Water	Field Survey	Keystone
Tripp	541.2	12.9	Open Water	Desktop	Keystone
Tripp	541.3	34.5	Open Water	Desktop	Keystone
Tripp	541.4	61.6	PSS	Desktop	NLCD2006
Tripp	541.5	116.2	PSS	Desktop	NLCD2006
Tripp	541.5	99.3	PEM	Desktop	GAP2010
Tripp	543.3	57.6	Open Water	Desktop	Keystone
Tripp	543.5	63.0	Open Water	Desktop	Keystone
Tripp	543.5	99.4	PEM	Desktop	Keystone
Tripp	543.7	29.2	Open Water	Desktop	Keystone
Tripp	544.6	85.2	PEM	Desktop	Keystone
Tripp	545.7	440.2	PEM	Desktop	NLCD2006
Tripp	546.1	37.2	PEM	Desktop	GAP2010
Tripp	546.5	244.9	PSS	Desktop	NLCD2006
Tripp	546.8	76.2	PEM	Desktop	GAP2010
Tripp	547.3	52.1	Open Water	Desktop	Keystone
Tripp	549.0	34.7	Open Water	Desktop	Keystone
Tripp	550.2	338.8	PEM	Desktop	Keystone
Tripp	550.8	34.2	Open Water	Desktop	Keystone
Tripp	550.8	26.5	PSS	Desktop	NLCD2006
Tripp	550.9	29.4	PEM	Desktop	NLCD2006
Tripp	552.3	67.4	PEM	Desktop	GAP2010
Tripp	552.5	14.2	PSS	Desktop	NLCD2006
Tripp	553.9	21.1	Open Water	Desktop	Keystone

Table 12 South Dakota Wetlands Along Project Route by Milepost

County	Beginning Milepost[a]	Distance Crossed (ft)[b]	Wetland Type[c]	Survey Type[d]	Source[e]
Tripp	553.9	278.9	PEM	Desktop	NLCD2006
Tripp	553.9	299.4	PEM	Desktop	NWI
Tripp	554.6	108.4	PEM	Desktop	NWI
Tripp	554.7	19.5	Open Water	Desktop	Keystone
Tripp	555.4	11.7	PEM	Desktop	NLCD2006
Tripp	555.4	138.5	PEM	Desktop	NWI
Tripp	555.7	163.3	PEM	Desktop	NWI
Tripp	555.9	40.6	Open Water	Desktop	Keystone
Tripp	557.5	109.2	PSS	Desktop	NLCD2006
Tripp	557.6	553.9	PSS	Desktop	NLCD2006
Tripp	558.3	14.7	Open Water	Field Survey	Keystone
Tripp	558.4	62.1	PSS	Desktop	NLCD2006
Tripp	558.5	15.2	Open Water	Field Survey	Keystone
Tripp	561.4	139.5	PEM	Desktop	NWI
Tripp	561.7	214.8	PEM	Desktop	NWI
Tripp	562.1	75.3	PEM	Desktop	Keystone
Tripp	563.0	26.4	Open Water	Desktop	Keystone
Tripp	563.4	39.4	PEM	Desktop	Keystone
Tripp	564.6	157.2	PEM	Desktop	GAP2010
Tripp	564.6	204.3	PEM	Desktop	NWI
Tripp	564.7	122.9	PEM	Desktop	NWI
Tripp	564.9	58.5	PEM	Desktop	GAP2010
Tripp	565.0	34.1	PEM	Desktop	NLCD2006
Tripp	567.3	133.2	PEM	Desktop	NWI
Tripp	570.1	112.4	PEM	Desktop	GAP2010
Tripp	570.2	34.2	PEM	Desktop	NLCD2006
Tripp	570.2	1726.8	PEM	Desktop	GAP2010
Tripp	570.3	136.2	PEM	Desktop	NWI
Tripp	570.6	77.5	PEM	Desktop	NWI
Tripp	575.6	49.5	PEM	Desktop	NWI
Tripp	576.5	73.0	PEM	Desktop	NWI
Tripp	576.9	807.6	PEM	Desktop	GAP2010
Tripp	577.0	72.9	PEM	Desktop	NLCD2006
Tripp	577.0	44.6	PEM	Desktop	GAP2010
Tripp	577.7	1677.9	PEM	Desktop	GAP2010
Tripp	577.7	0.9	PEM	Desktop	GAP2010
Tripp	577.7	18.6	PEM	Desktop	NLCD2006
Tripp	577.8	72.6	PEM	Desktop	NLCD2006
Tripp	577.8	68.4	PEM	Desktop	GAP2010
Tripp	577.8	339.4	PEM	Desktop	NLCD2006
Tripp	577.8	16.8	PEM	Desktop	GAP2010
Tripp	577.8	50.6	PEM	Desktop	GAP2010
Tripp	577.8	101.5	PEM	Desktop	GAP2010
Tripp	577.8	259.5	PEM	Desktop	GAP2010

Table 12 South Dakota Wetlands Along Project Route by Milepost

County	Beginning Milepost[a]	Distance Crossed (ft)[b]	Wetland Type[c]	Survey Type[d]	Source[e]
Tripp	577.9	33.0	PEM	Desktop	NWI
Tripp	577.9	72.0	PEM	Desktop	NWI
Tripp	577.9	232.6	PEM	Field Survey	Keystone
Tripp	577.9	320.4	PEM	Desktop	NLCD2006
Tripp	577.9	25.1	PEM	Desktop	NWI
Tripp	578.0	3.2	PEM	Desktop	NLCD2006
Tripp	578.0	354.3	PEM	Desktop	GAP2010
Tripp	578.1	198.3	PEM	Desktop	GAP2010
Tripp	578.1	206.3	PEM	Desktop	GAP2010
Tripp	578.3	65.1	PEM	Desktop	NWI
Tripp	578.4	394.2	PEM	Desktop	NLCD2006
Tripp	578.4	11.3	Open Water	Field Survey	Keystone
Tripp	578.4	106.6	PEM	Desktop	NWI
Tripp	578.6	1599.3	PEM	Desktop	GAP2010
Tripp	578.7	6.0	PEM	Desktop	NWI
Tripp	578.7	63.6	PEM	Desktop	NWI
Tripp	578.7	285.0	PEM	Desktop	GAP2010
Tripp	578.7	43.6	PEM	Desktop	GAP2010
Tripp	578.9	458.8	PSS	Desktop	NLCD2006
Tripp	578.9	83.0	PEM	Desktop	GAP2010
Tripp	578.9	101.9	PEM	Desktop	NLCD2006
Tripp	579.0	66.2	PEM	Desktop	NWI
Tripp	579.0	10.6	PEM	Desktop	GAP2010
Tripp	579.0	21.5	PSS	Desktop	NLCD2006
Tripp	579.0	192.6	PFO	Desktop	NWI
Tripp	579.1	26.4	Open Water	Desktop	Keystone
Tripp	579.1	9.7	PEM	Desktop	NLCD2006
Tripp	579.1	203.2	PEM	Desktop	GAP2010
Tripp	579.2	101.0	PEM	Desktop	GAP2010
Tripp	579.2	219.5	PEM	Desktop	NLCD2006
Tripp	580.6	17.8	Open Water	Desktop	Keystone
Tripp	580.6	28.2	PEM	Desktop	GAP2010
Tripp	580.6	39.9	PEM	Desktop	NLCD2006
Tripp	580.6	235.8	PEM	Desktop	GAP2010
Tripp	580.7	262.9	PEM	Desktop	NWI
Tripp	580.8	909.2	PEM	Desktop	GAP2010
Tripp	581.0	408.7	PEM	Desktop	GAP2010
Tripp	581.0	219.7	PEM	Desktop	NLCD2006
Tripp	581.0	320.8	PEM	Desktop	GAP2010
Tripp	581.1	1254.4	PEM	Desktop	GAP2010
Tripp	581.1	10.4	PEM	Desktop	GAP2010
Tripp	581.1	212.0	PEM	Desktop	GAP2010
Tripp	581.4	1983.8	PEM	Desktop	GAP2010
Tripp	581.4	276.5	PEM	Desktop	NLCD2006

Table 12 South Dakota Wetlands Along Project Route by Milepost

County	Beginning Milepost[a]	Distance Crossed (ft)[b]	Wetland Type[c]	Survey Type[d]	Source[e]
Tripp	581.4	156.6	PEM	Desktop	GAP2010
Tripp	581.4	6.1	PEM	Desktop	GAP2010
Tripp	581.8	100.6	PEM	Desktop	NLCD2006
Tripp	583.1	76.9	PEM	Desktop	GAP2010
Tripp	583.1	128.9	PEM	Desktop	GAP2010
Tripp	583.2	164.1	PSS	Desktop	NLCD2006
Tripp	583.4	72.7	PSS	Desktop	NLCD2006
Tripp	583.8	302.2	PEM	Desktop	NLCD2006
Tripp	584.0	24.5	PEM	Desktop	GAP2010
Tripp	584.5	424.8	PEM	Desktop	GAP2010
Tripp	584.5	73.7	PEM	Desktop	NLCD2006
Tripp	584.5	77.4	PEM	Desktop	GAP2010
Tripp	584.5	68.1	PEM	Desktop	NLCD2006
Tripp	584.5	91.0	PEM	Desktop	NLCD2006
Tripp	584.6	81.7	PSS	Desktop	NLCD2006
Tripp	584.9	50.6	Open Water	Desktop	Keystone
Tripp	585.2	28.7	Open Water	Desktop	Keystone
Tripp	585.3	160.7	PSS	Desktop	NLCD2006
Tripp	585.5	5.8	Open Water	Field Survey	Keystone
Tripp	586.8	11.5	Open Water	Desktop	Keystone
Tripp	586.8	21.2	Open Water	Desktop	Keystone
Tripp	586.9	16.8	Open Water	Desktop	Keystone
Tripp	586.9	24.3	Open Water	Desktop	Keystone
Tripp	587.1	38.8	Open Water	Desktop	Keystone
Tripp	587.2	35.3	Open Water	Desktop	Keystone
Tripp	587.2	297.7	PSS	Desktop	NLCD2006
Tripp	587.3	60.1	Open Water	Field Survey	Keystone
Tripp	587.6	65.4	PEM	Desktop	GAP2010
Tripp	587.6	22.3	PSS	Desktop	NLCD2006
Tripp	587.7	12.8	Open Water	Desktop	Keystone

Table Notes:

[a] Beginning milepost is the approximate milepost location where the pipeline first intercepts the wetland.

[b] Distance crossed is the linear distance the wetland is intercepted by the pipeline measured in feet.

[c] Wetland type is based on Cowardin classification (Cowardin et al. 1979). PEM = palustrine emergent wetland, PSS = palustrine scrub shrub wetland, PFO = palustrine forested wetland.

[d] Survey type indicates whether wetland polygon was mapped during a field survey by Keystone or mapped using desktop methods (aerial photo interpretation or database GIS data).

[e] Source identifies what data source was used to generate the wetland data presented in this table.

Data Sources (see Section 4.4 references): TransCanada Keystone Pipeline, LP (Keystone) (exp Energy Services Inc. 2012a and 2012b), NWI (USFWS 2012), NLCD2006 (Fry 2011), GAP (2010) (USGS 2011).

-This page intentionally left blank-

Required Crossing Criteria for Reclamation Facilities

-This page intentionally left blank-

RECLAMATIO

Managing Water in the We

TransCanada Keystone XL Pipeline

Required Crossing Criteria for Reclamation Facilities

August 2010

U.S. Department of the Interior
Bureau of Reclamation
Great Plains Region

Oglala Sioux Rural Water Crossing

Oglala Sioux Rural Water Supply System
South Dakota
NW1/4, Section 36, T1S, R29E, Jones County

The Oglala Sioux Rural Water Supply System supplies treated drinking water from the Missouri River to numerous cities and residents in the south-central part of South Dakota.

Damages. The Bureau of Reclamation or Oglala Sioux Rural Water Supply System (OSRWSS) shall not be responsible for any loss or damage to property arising from the issuance of this permit, including but not limited to damages to growing crops, animals, and machinery; or injury to TransCanada or its associates, officers, agents, employees, or any others who are on the premises; or for damages or interference caused by natural phenomena. TransCanada agrees to save Reclamation, OSRWSS or any of its assigns or agencies harmless from any and all claims for damages or losses that may arise from or be incidental to any activity associated with this permit. TransCanada also agrees to save Reclamation, OSRWSS, or its assigns and agencies, harmless from any damage to TransCanada or third parties resulting from project activities of Reclamation, OSRWSS, its agents and assigns.

Liability. The permitted activities shall be conducted so as not to interfere with the operation, maintenance, and administration of the OSRWSS Core System pipeline. Any additional repairs, maintenance, or expense to the OSRWSS Core System pipeline as a result of the permitted activities shall be reimbursed to the OSRWSS by TransCanada. The Secretary of the Interior's determination of such expense shall be final and binding upon the parties hereto. TransCanada is responsible for any costs associated with impacts to their facility caused by modifications or relocations of the OSRWSS Core System pipeline and for costs incurred by OSRWSS for modifications or relocations due to the presence of TransCanada.

Interruption of Service: TransCanada shall make provisions acceptable to Reclamation and OSRWSS for any activity conducted by TransCanada that causes water service in the OSRWSS Core System pipeline to be interrupted. Such provisions may include advance notification of the service interruption and temporary facilities to continue water service for interruptions lasting longer than 24 hours.

TransCanada shall comply with the requirements shown on the following drawings:
1. Drawing G-3 showing the general location of the OSRWSS steel pipeline crossing
2. Drawing C-40 showing the plan and profile of the OSRWSS steel pipeline crossing.
3. Drawing CP-1 showing the Corrosion Protection Requirements

- Not later than 45 days before start of construction, TransCanada shall provide OSRWSS and Reclamation with drawings and specifications for review and comment of all features of construction at the crossing, including cathodic protection. Comments to TransCanada will be concluded within 30 days, and TransCanada shall incorporate those comments in the plans and specifications for the crossing.

- Not later than 10 days before start of construction, TransCanada shall provide OSRWSS with notice of the start of construction to facilitate monitoring and observation by

OSRWSS. TransCanada shall be responsible for addressing landowner concerns, issues and interests within the OSRWSS right-of-way or easement.

- TransCanada shall bore under the OSRWSS pipeline right-of-way, which is 75 feet wide.

- OSRWSS has a buried fiber optic cable installed with its pipeline that was placed by plow; its precise location is unknown. The burial depth information provided on the drawings is for information purposes only. TransCanada shall undertake exploratory excavations (potholing) to determine the exact burial depth for both the OSRWSS core pipeline and fiber optic line prior to starting crossing designs and construction of their pipeline.

- The OSRWSS Core System steel pipeline is protected by an induced current ground bed. TransCanada must coordinate and correspond with OSRWSS's corrosion experts and Reclamation during and after construction to assess the potential impacts of interference of its pipeline.

- TransCanada shall receive OSRWSS and Reclamation's review and approval of crossing specifications and drawings prior to starting work, including on the cathodic protection design, to assure it does not impact the OSRWSS Core System or its cathodic protection system.

- TransCanada shall install test stations as shown on Drawing CP-1.

- TransCanada shall not use a casing pipe when jacking under OSRWSS due to potential cathodic protection interference problems. If this is not possible, then TransCanada must provide a cathodic protection plan for review, comment, and approval from OSRWSS and Reclamation which accounts for the casing pipe.

- TransCanada shall maintain a minimum clearance of 18 inches between pipelines, in accordance with *Recommended Standards for Water Works (Tens States Standards), 2003 Edition, page 115.*

- TransCanada shall install detectable warning tape, above ground signage (noting Keystone Pipeline location), and provide as-built copies of the Keystone XL Pipeline crossings to OSRWSS and Reclamation within 90 days of substantial completion.

- TransCanada must design its crossings such that the OSRWSS Core System pipeline suffers no reduction in working pressure rating or pipeline integrity due to the operations of TransCanada.

RECORD DRAWING 11/24/03 GVE

R:\2246\Trans Canada Keystone XL Pipeline\MMI OSRWSS Recommendations\Phase VI sitebase.dwg Apr/12/2010

VERIFY SCALE!
THESE PRINTS MAY BE REDUCED. LINE BELOW MEASURES ONE INCH ON ORIGINAL DRAWING.
MODIFY SCALE ACCORDINGLY!

REGISTERED PROFESSIONAL ENGINEER
REG. NO. 5036
TIMOTHY ROBERT BERRY
SOUTH DAKOTA

REVISIONS

NO.	DESCRIPTION	DATE	BY

MORRISON MAIERLE, INC.
ENGINEERS SCIENTISTS SURVEYORS PLANNERS SINCE 1945
An Employee-Owned Company
910 Helena Avenue Helena MT 59604
Phone: (406) 442-3050 Fax: (406) 442-7862

COPYRIGHT © MORRISON MAIERLE, INC., 2000

DRAWN BY: CJB
CHK'D. BY: TRB
APPR. BY: TRB
DATE: 2/2001
Q.A. REVIEW
BY:
DATE:

MNI WICONI CORE PIPELINE – PHASE VI
OGLALA SIUOX RURAL WATER SUPPLY SYSTEM

KEY MAP

PROJECT NO. 2246.012.02
SHEET NUMBER 3
DRAWING NUMBER G-3

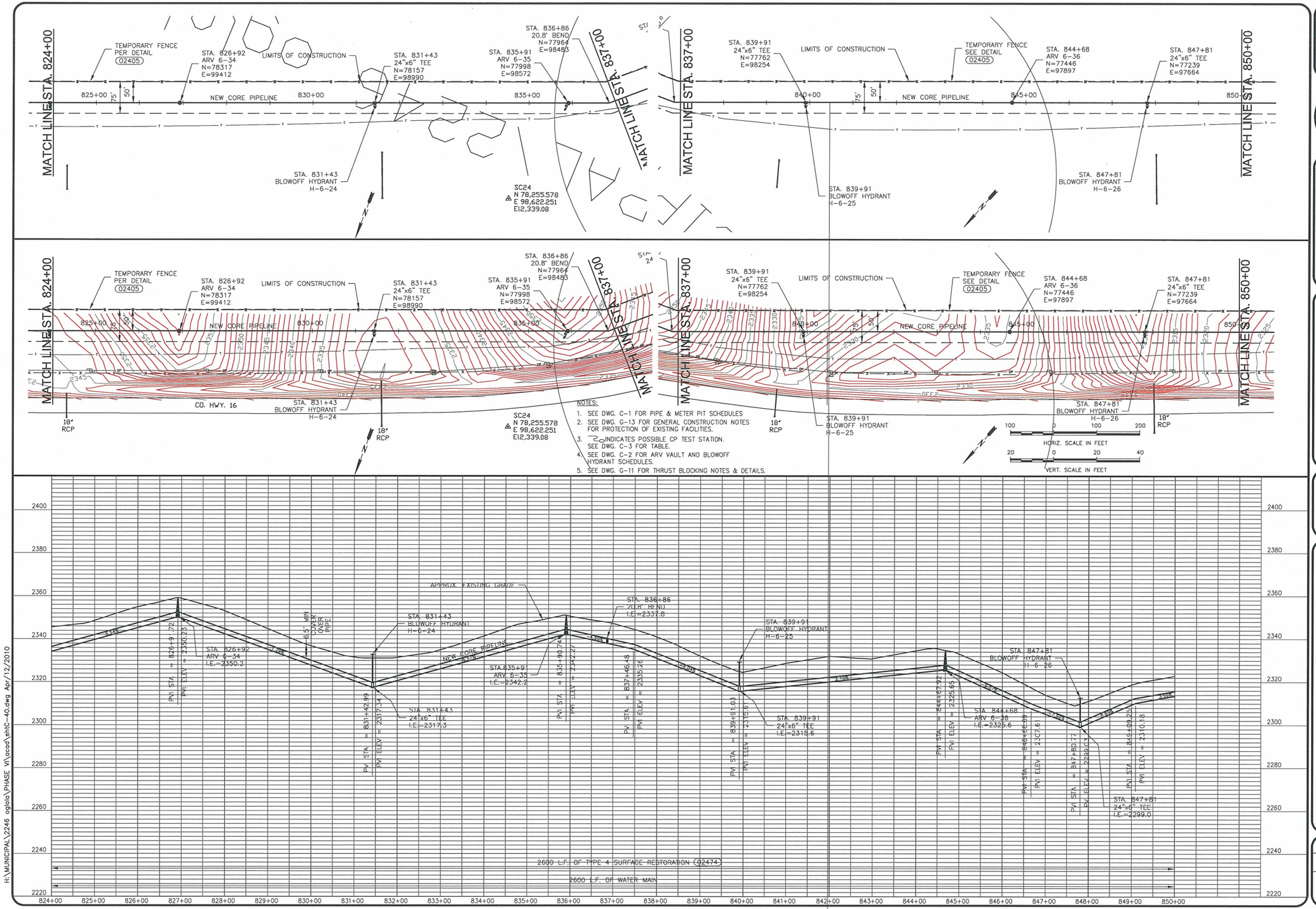

NOTES:

1. SEE DWG. C-1 FOR PIPE & METER PIT SCHEDULES
2. SEE DWG. G-13 FOR GENERAL CONSTRUCTION NOTES FOR PROTECTION OF EXISTING FACILITIES.
3. INDICATES POSSIBLE CP TEST STATION. SEE DWG. C-3 FOR TABLE.
4. SEE DWG. C-2 FOR ARV VAULT AND BLOWOFF HYDRANT SCHEDULES.
5. SEE DWG. G-11 FOR THRUST BLOCKING NOTES & DETAILS.

H:\MUNICIPAL\2246 oglala\PHASE VI\acad\shtC-40.dwg Apr/12/2010

VERIFY SCALE! THESE PRINTS MAY BE REDUCED. USE THE LINE BELOW TO VERIFY THE ORIGINAL DRAWING. MODIFY SCALE ACCORDINGLY!

REGISTERED PROFESSIONAL ENGINEER REG. NO. 5036 TIMOTHY ROBERT BERRY STATE OF NEBRASKA

NO.	DESCRIPTION	DATE	BY

REVISIONS

MORRISON MAIERLE, INC.
ENGINEERS ECONOMISTS SURVEYORS PLANNERS
SINCE 1945
4th Straight-Dorsal Designing
Rapid City, South Dakota 57604
Phone: (605) 342-3050 Fax: (605) 342-7862
COPYRIGHT © MORRISON MAIERLE, INC., 2010

DRAWN BY: CJB
CHK'D. BY: JMH
APPR. BY: TRB
DATE: 02/2001
Q.A. REVIEW
BY:
DATE:

MINI WICONI CORE PIPELINE – PHASE VI
OGLALA SIOUX RURAL WATER SUPPLY SYSTEM

FINISHED WATER – PLAN & PROFILE
STA. 824+00 TO STA. 850+00

PROJECT NO. 2246.012.02
SHEET NUMBER 47
DRAWING NUMBER C-40

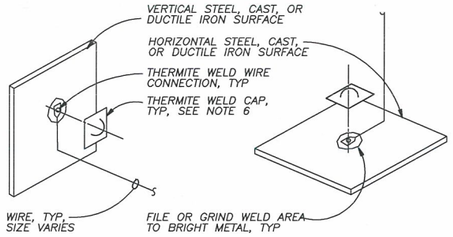

NOTES:

1. COPPER SLEEVE REQUIRED FOR THERMITE WELDING OF #10 AWG AND SMALLER WIRE.
2. USE COPPER SLEEVE FOR THERMITE WELDING OF #4 AND #2 AWG JOINT BONDING WIRES.
3. WELDER AND CARTRIDGE SIZE VARIES ACCORDING TO SURFACE SHAPE, MATERIAL, AND HORIZONTAL OR VERTICAL SURFACE. CONSULT WELDER MANUFACTURER FOR RECOMMENDED WELDER AND CARTRIDGE.
4. FOR MULTIPLE WIRE CONNECTIONS TO PIPE SEPARATE THERMITE WELD WIRE CONNECTIONS BY ONE PIPE DIAMETER MINIMUM, 2'-0" MAXIMUM.
5. USE 15 GRAM MAXIMUM SIZE WELD CARTRIDGES FOR CONNECTIONS TO PETROLEUM AND NATURAL GAS PIPELINES OR STRUCTURES. WIRE CONNECTIONS SHALL BE AS SPECIFIED AND APPROVED BY THE OWNER.
6. COMPLETE THERMITE WELD CONNECTIONS IN ACCORDANCE WITH (13903)
7. COAT COMPLETED THERMITE WELD CONNECTIONS WITH ROYSTON HANDYCAP II AND 747 PRIMER OR HEAT SHRINK SLEEVE AS SPECIFIED.
8. COLOR CODE WIRES ACCORDING TO WIRE COLOR CODE (13902)
9. ATTACH THERMITE WELD TO STUD OR WELD BASE PLATE IF PROVIDED.

WIRE CONNECTION FOR VERTICAL AND HORIZONTAL SURFACES (13901)

NTS

ALL DESIGNS, DRAWINGS, SPECIFICATIONS, DOCUMENTS, AND THE IDEAS AND DESIGNS INCORPORATED HEREIN, AS AN INSTRUMENT OF PROFESSIONAL SERVICES IS THE PROPERTY OF RUSTNOT AND IS NOT TO BE USED, IN WHOLE OR IN PART FOR ANY OTHER PROJECT WITHOUT THE WRITTEN AUTHORIZATION OF RUSTNOT.
©RUSTNOT 2000

STD DET 13901

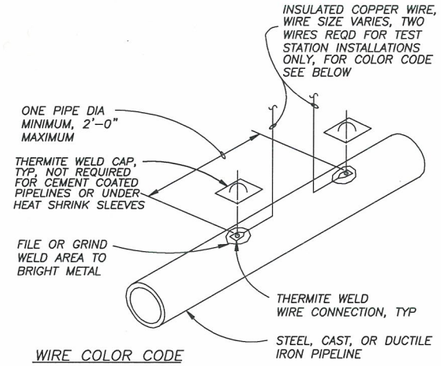

WIRE COLOR CODE

1. PIPELINE TEST WIRES:
   WATER – BLUE
   FOREIGN PIPELINES – WHITE OR AS REQUESTED BY FOREIGN PIPELINE COMPANY
2. UNPROTECTED PIPELINE – BLACK
3. CASINGS – ORANGE
4. ANODE LEADS – BLACK
5. REFERENCE ELECTRODE WIRES – YELLOW

PIPELINE WIRE CONNECTION (13902)

NTS

ALL DESIGNS, DRAWINGS, SPECIFICATIONS, DOCUMENTS, AND THE IDEAS AND DESIGNS INCORPORATED HEREIN, AS AN INSTRUMENT OF PROFESSIONAL SERVICES IS THE PROPERTY OF RUSTNOT AND IS NOT TO BE USED, IN WHOLE OR IN PART FOR ANY OTHER PROJECT WITHOUT THE WRITTEN AUTHORIZATION OF RUSTNOT.
©RUSTNOT 2001

STD DET 13902

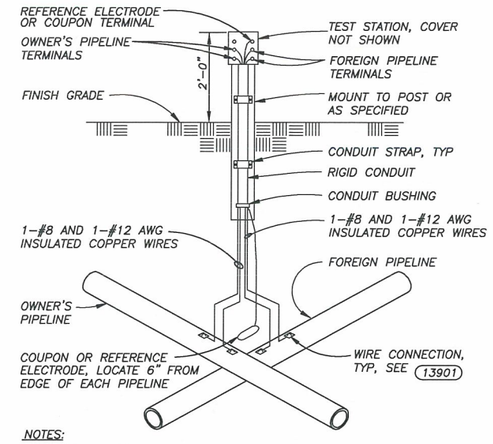

NOTES:

1. OBTAIN APPROVAL OF FOREIGN PIPELINE OWNER PRIOR TO EXCAVATION.
2. WIRE CONNECTIONS TO FOREIGN PIPELINE SHALL BE MADE BY FOREIGN PIPELINE REPRESENTATIVE.
3. INSTALL REFERENCE ELECTRODES OR COUPONS ONLY AT TEST STATIONS INDICATED ON TEST STATION LOCATION SCHEDULE.
4. COLOR CODE WIRES ACCORDING TO WIRE COLOR CODE (13902)

TYPE P-F POST MOUNTED TEST STATION (13923)

NTS

ALL DESIGNS, DRAWINGS, SPECIFICATIONS, DOCUMENTS, AND THE IDEAS AND DESIGNS INCORPORATED HEREIN, AS AN INSTRUMENT OF PROFESSIONAL SERVICES IS THE PROPERTY OF RUSTNOT AND IS NOT TO BE USED, IN WHOLE OR IN PART FOR ANY OTHER PROJECT WITHOUT THE WRITTEN AUTHORIZATION OF RUSTNOT.
©RUSTNOT 2001

STD DET 13923

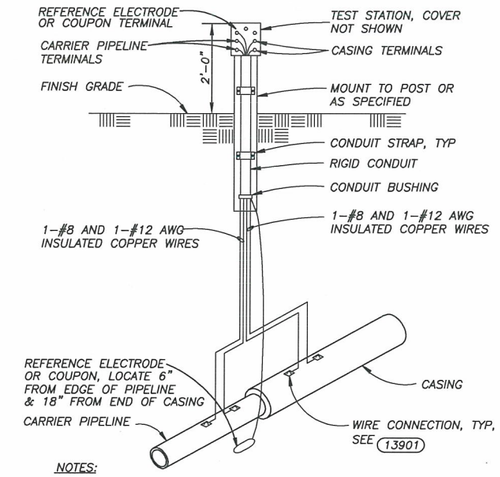

NOTES:

1. INSTALL REFERENCE ELECTRODES OR COUPONS ONLY AT TEST STATIONS INDICATED ON TEST STATION LOCATION SCHEDULE.
2. COLOR CODE WIRES ACCORDING TO WIRE COLOR CODE (13902)

TYPE P-C POST MOUNTED TEST STATION (13924)

NTS

ALL DESIGNS, DRAWINGS, SPECIFICATIONS, DOCUMENTS, AND THE IDEAS AND DESIGNS INCORPORATED HEREIN, AS AN INSTRUMENT OF PROFESSIONAL SERVICES IS THE PROPERTY OF RUSTNOT AND IS NOT TO BE USED, IN WHOLE OR IN PART FOR ANY OTHER PROJECT WITHOUT THE WRITTEN AUTHORIZATION OF RUSTNOT.
©RUSTNOT 2001

STD DET 13924

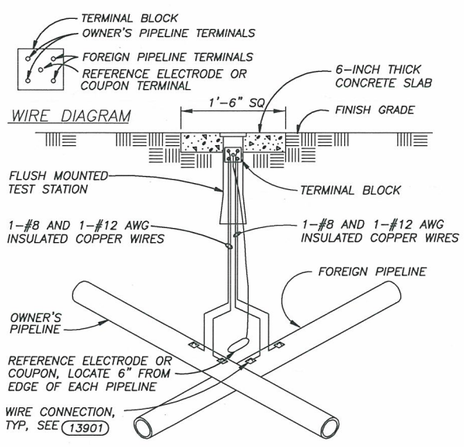

NOTES:

1. OBTAIN APPROVAL OF FOREIGN PIPELINE OWNER PRIOR TO EXCAVATION.
2. WIRE CONNECTIONS TO FOREIGN PIPELINE SHALL BE MADE BY FOREIGN PIPELINE REPRESENTATIVE.
3. PROVIDE SUFFICIENT SLACK IN TEST WIRES TO ALLOW TERMINAL BLOCK TO EXTEND 18" OUT OF TEST STATION. COIL WIRES IN TEST STATION.
4. INSTALL REFERENCE ELECTRODES OR COUPON ONLY AT TEST STATIONS INDICATED ON TEST STATION LOCATION SCHEDULE.
5. COLOR CODE WIRES ACCORDING TO WIRE COLOR CODE (13902)

TYPE F-F FLUSH MOUNTED TEST STATION (13933)

ALL DESIGNS, DRAWINGS, SPECIFICATIONS, DOCUMENTS, AND THE IDEAS AND DESIGNS INCORPORATED HEREIN, AS AN INSTRUMENT OF PROFESSIONAL SERVICES IS THE PROPERTY OF RUSTNOT AND IS NOT TO BE USED, IN WHOLE OR IN PART FOR ANY OTHER PROJECT WITHOUT THE WRITTEN AUTHORIZATION OF RUSTNOT.
©RUSTNOT 2001

STD DET 13933

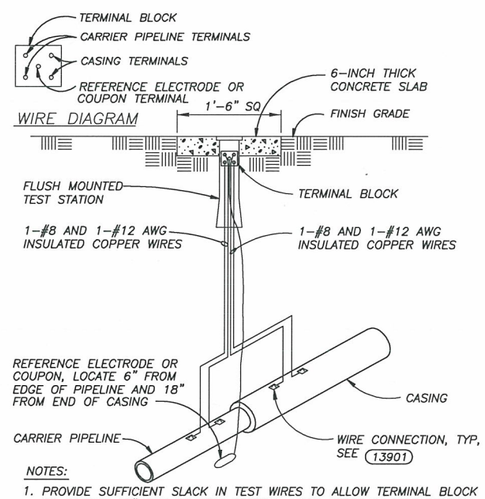

NOTES:

1. PROVIDE SUFFICIENT SLACK IN TEST WIRES TO ALLOW TERMINAL BLOCK TO EXTEND 18" OUT OF TEST STATION. COIL WIRES IN TEST STATION.
2. INSTALL REFERENCE ELECTRODES OR COUPON ONLY AT TEST STATIONS INDICATED ON TEST STATION LOCATION SCHEDULE.
3. COLOR CODE WIRES ACCORDING TO WIRE COLOR CODE (13902)

TYPE F-C FLUSH MOUNTED TEST STATION (13934)

NTS

ALL DESIGNS, DRAWINGS, SPECIFICATIONS, DOCUMENTS, AND THE IDEAS AND DESIGNS INCORPORATED HEREIN, AS AN INSTRUMENT OF PROFESSIONAL SERVICES IS THE PROPERTY OF RUSTNOT AND IS NOT TO BE USED, IN WHOLE OR IN PART FOR ANY OTHER PROJECT WITHOUT THE WRITTEN AUTHORIZATION OF RUSTNOT.
©RUSTNOT 2000

STD DET 13934

VERIFY SCALE!
THESE PRINTS MAY BE REDUCED. LINE BELOW MEASURES ONE INCH ON ORIGINAL DRAWING.
MODIFY SCALE ACCORDINGLY!

REVISIONS

NO.	DESCRIPTION	DATE	BY

R:\2246\Trans Canada Keystone XL Pipeline\MMI OSR\WSS Recommendations\CP Recommendations.dwg Plotted by tim berry on Apr/12/2010

MORRISON MAIERLE, INC.
An Employee-Owned Company
Engineers
Surveyors
Scientists
Planners
1 Engineering Place
Helena, MT 59602
Phone: (406) 442-3050
Fax: (406) 442-7862

COPYRIGHT © MORRISON-MAIERLE, INC., 2010

REGISTERED PROFESSIONAL ENGINEER
REG. NO. 5036
TIMOTHY ROBERT BERRY
SOUTH DAKOTA

DRAWN BY: JMH
CHK'D. BY: JMH
APPR. BY: TRB
DATE: 4/2010
Q.A. REVIEW
BY:
DATE:

OGLALA SIOUX RURUAL WATER SUPPLY SYSTEM
TransCanada Keystone Pipeline Crossing of Sourh Core Pipeline
Near Draper SOUTH DAKOTA

CORROSION PROTECTION DETAILS

PROJECT NUMBER 2246.022.08
SHEET NUMBER 73
DRAWING NUMBER CP-1

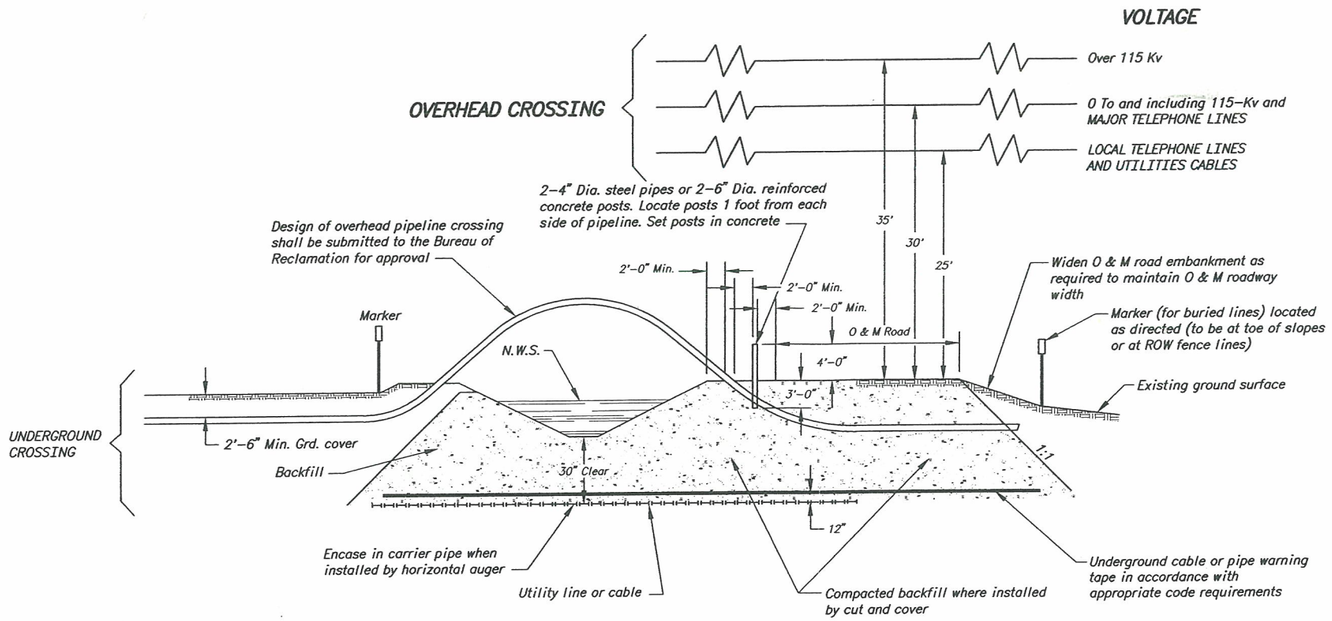

TYPICAL SECTION
OPEN CANAL, LATERAL OR DRAIN CROSSINGS

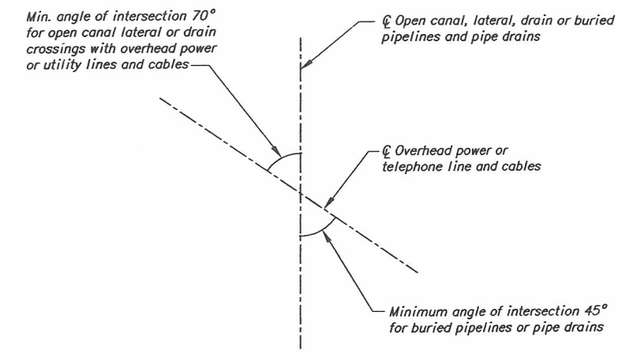

CROSSING PLAN

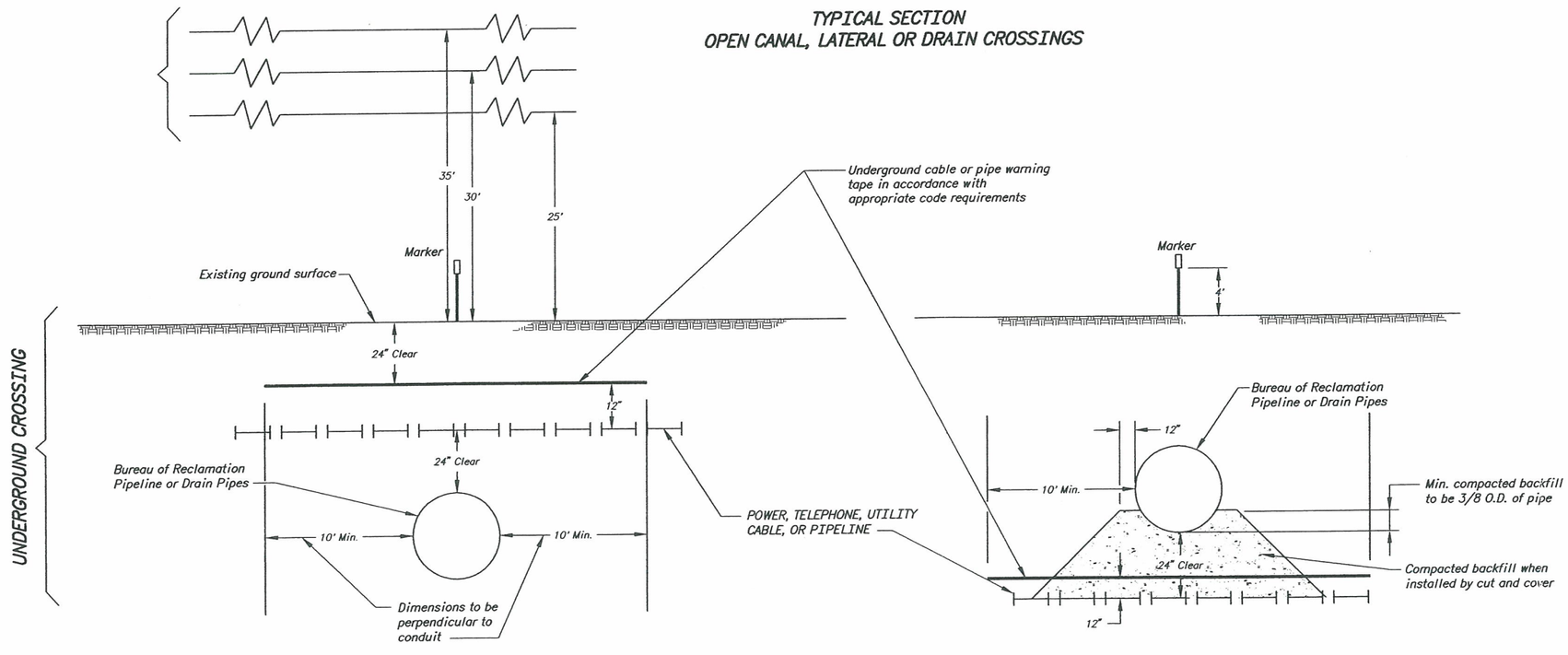

TYPICAL SECTION
PIPELINE OR DRAIN CROSSING

NOTES

1. Drawing is not to scale.
2. Overhead crossing clearances are minimum for all conditions.
3. Any additional clearances or permits required for construction shall be provided by the Contractor.
4. Conductor clearance shown is for 60° F and final unlocked sag.

REV NO		
1	03/14/2002 600- L.K.L., P.E.	REDRAWN AND REVISED

ALWAYS THINK SAFETY

UNITED STATES
DEPARTMENT OF THE INTERIOR
BUREAU OF RECLAMATION
PICK-SLOAN MISSOURI BASIN PROGRAM

STANDARD CROSSING & CLEARANCE REQ.

UTILITY LINES AND CABLES

DESIGNED D. ARBUTHNOT — TECH. APPROVAL S.SHIMAMOTO
DRAWN J. POITRA — SUBMITTED D.ARBUTHNOT
CHECKED D. ARBUHNOT — APPROVED J.M.VERZUH

CADD SYSTEM	CADD FILENAME	DATE AND TIME PLOTTED
AutoCAD	000008LY	03/15/02
BILLINGS, MONTANA	01/11/2002	40-600-51

SHEET 1 OF 1

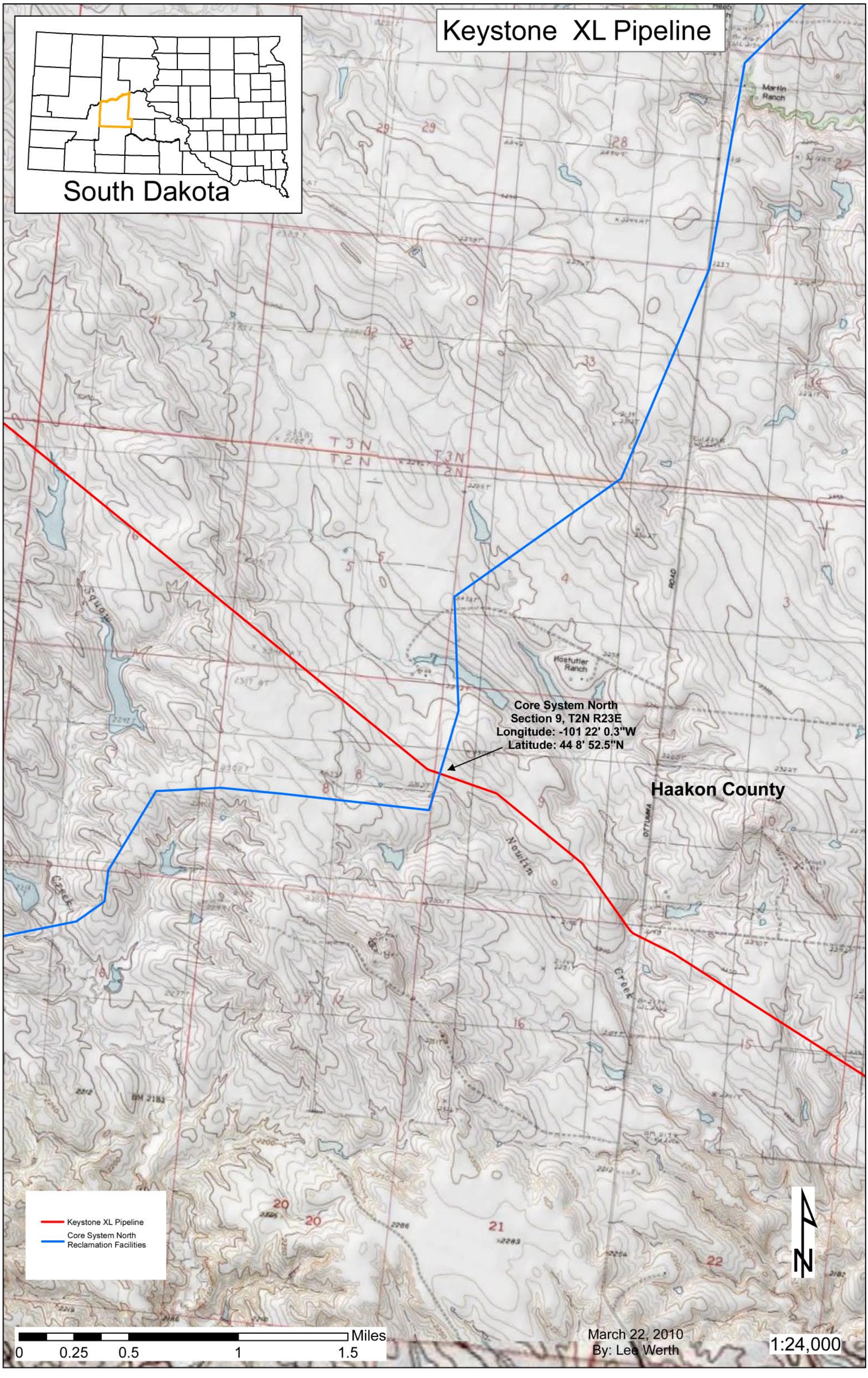
Keystone XL Pipeline
South Dakota
Core System North
Section 9, T2N R23E
Longitude: -101 22' 0.3"W
Latitude: 44 8' 52.5"N
Haakon County
Keystone XL Pipeline
Core System North Reclamation Facilities
Miles
0 0.25 0.5 1 1.5
March 22, 2010
By: Lee Werth
1:24,000

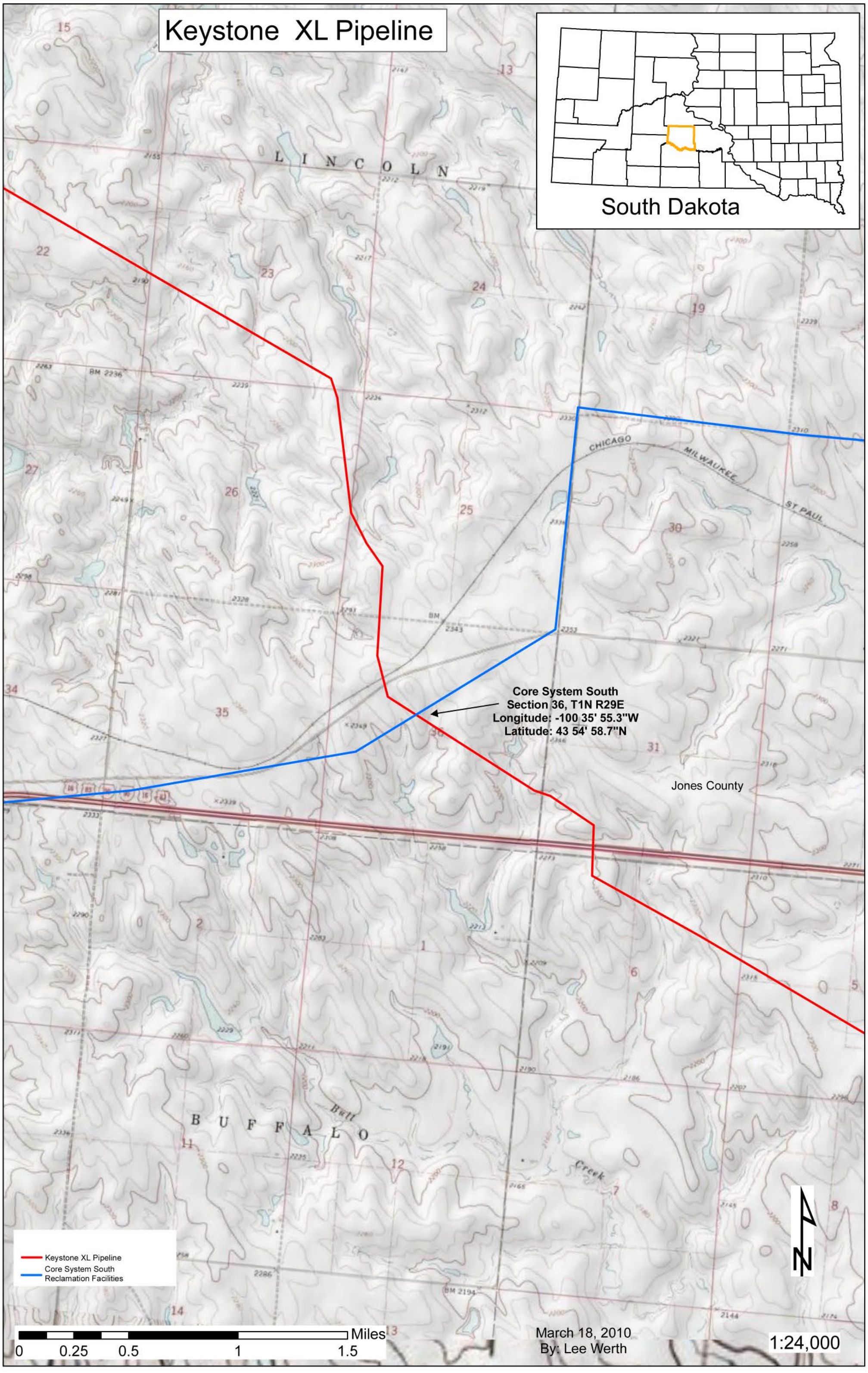
Keystone XL Pipeline
South Dakota
LINCOLN
CHICAGO
MILWAUKEE
ST PAUL
Core System South
Section 36, T1N R29E
Longitude: -100 35' 55.3"W
Latitude: 43 54' 58.7"N
Jones County
BUFFALO
Buff
Creek
Keystone XL Pipeline
Core System South
Reclamation Facilities
Miles
0
0.25
0.5
1
1.5
March 18, 2010
By: Lee Werth
1:24,000

Irrigation Crossings

General Requirements

Utility Crossing Reclamation's Canal

Utility crossings include open ditch laterals, subsurface and surface drains, levees, and similar facilities.

General Requirements:

1. Utilities crossing Reclamation canals should be designed to cross perpendicular (between 70 and 90 degrees).
2. Pier construction in the canal for new utility crossings will not be allowed. New utility crossings will be free span design.
3. Open cut crossings of reclamation canals and ditches, when allowed, require replacing linings to re-establish the original construction style and materials (i.e., disturbed concrete lining panels will be removed in their entirety and replaced, membrane lining and earth or concrete protective cover will be re-constructed, gravel and canal under-drainage systems will be re-established to full working order, etc.) Proposed methods of construction will be prepared and provided for approval.
4. For backfill/compaction requirements, refer to Section 02302 – Compacting Earth Materials.
5. Boring and jacking of a utility will constructed through the embankment foundation materials. Boring and jacking of a utility through canal embankments or protective levees will not be permitted. Applicants will make special design and construction considerations with bored crossings under canals containing water during construction. Among these will be using proper bentonite slurry to seal the amulus space between the utility conduit and the boring cavity from canal seepage.

   The applicant's drilling plan will cover:

   a. Drilling methods and equipment.
   b. Methods for preserving existing foundation material.
   c. Methods and equipment to determine the presence of quick soil conditions or scouring and caving.
   d. Proposed method for installation and removal if casings are used.
   e. Methods and equipment for accurately determining the depth of concrete and actual or theoretical volume placed.

   The applicant's contingency plan will cover:

   a. Means to repair facilities.
   b. Minimum flows after an event.
   c. Review of geotechnical conditions.
   d. Assessment of how the proposed mitigations will address geotechnical conditions.
   e. Methods of restoring foundation materials.

f. List of material, equipment, and personnel with qualifications to be used during mitigation work.
g. A seal from a Professional Engineer on all relevant plans and drawings.

6. When horizontal directional drilling (HDD) or other trenchless methods are used, canal seepage conditions may be aggravated by the collapse of the canal foundation material into the annular void between the bore and pipe. Penetration through the top stratum of fine-grained materials may concentrate seepage at those locations. Pipe installed with trenchless methods shall proceed only after completion of a comprehensive evaluation of the following:
   a. Comprehensive understanding of the subsurface soil and groundwater conditions to a minimum depth of 20 feet below the lowest pipe elevation.
   b. Locations of the HDD pipe penetration entry and exit.
   c. Construction procedures.
   d. Allowable uplift pressures.
   e. Onsite quality control and quality assurance monitoring during construction operations.
   f. Grouting of the pipe annulus.
   g. Backfilling of any excavated areas.
   h. Repair and reinstatement of the construction staging areas.

   A geotechnical report will be submitted with the application for review prior of the proposed utility crossing.

7. Cut and cover constructed utilities under Reclamation canals shall be in accordance with drawing 40-600-51.
8. Reclamation's ongoing O&M activities will not be disturbed during crossing construction. The primary or secondary operating roads shall be kept available for Reclamation use at all times.
9. Canal embankments will be re-built or repaired with materials and standards equal to or better than the existing embankments.
10. Disturbed areas shall be reseeded in accordance with Section 02924 – Seeding and Soil Supplements.
11. Drawings will be stamped and signed by a Professional Engineer and contain the following information:
    a. Canal milepost or station at each proposed crossing, utility size and location, and type of utility or material transported.
    b. Maximum utility operating pressure, type of pipe, joints, wall thickness, maximum test pressure, and description of test procedures.
    c. Type of sleeve/casing (when allowed) including diameter, joints, and wall thickness.

d. For utilities attached to a bridge or an overchute, details showing the structure name, superstructure, abutments, spacing or utility supports on the structure, location of other attached utilities, and structural calculations.
e. Protective coatings and corrosion control measures.
f. Method of handling pipeline expansion and contraction.
g. Location of the nearest shutoff valve on each side of the crossing.
h. Location and details of thrust restraints.
i. Design code(s) used for the utility crossing.
j. Location, including depth, of the buried pipeline communication and control cables.
k. Other existing utility easements in the immediate vicinity.

Hazardous Material Carrier Requirements:

1. Pipelines carrying hazardous material or pollutants (e.g., oils, gasoline, sewage, contaminated waters, and non-potable waters) will be designed for a reduced risk of failure in the portion within Reclamation's ROW. The design will require either:
   a. Designing the crossing pipeline with an additional 50 percent working pressure factor or
   b. Using secondary containment (casing pipe) for all hazardous material pipelines.
2. To minimize the amount of any hazardous material entering the canal, Reclamation may require the installation of a block (gate) valve and or a check valve on each side of the canal between the ROW boundary and the canal prism. When selecting the types of valves, take into account the flow direction and terrain.
3. A final hazardous material spill contingency plan and an emergency response plan shall be approved by Reclamation prior to the start of construction.
4. A monitoring program and/or Supervisory control and Data Acquisition system alarm may be required depending on the hazardous material be transported. This applies to all "overcrossings" and "undercrossings" when the hydraulic grade line is with 60 inches of the canal liner or when geology would promote this requirement.

Utility Crossing Reclamation's Underground Pipelines

1. The applicant will submit the procedures, excavation plans, schedules, as well as type and weight of the construction equipment to be used for crossing the Reclamation pipeline.
2. For utilities crossing above or under the Reclamation pipeline, the vertical clearance between the utility and the Reclamation pipeline shall be as shown on drawing 40-600-51.
3. The location of the Reclamation pipeline through the proposed construction area shall be shown on the plans. Prior to Reclamation approval of the crossing, the pipeline shall be located and exposed by "potholing." The "pothole" locations shall be shown on the

drawings. Elevations of the existing Reclamation pipeline shall also be shown on the drawings.

4. Drawings shall contain the following:
    a. Reclamation milepost or stationing at each proposed crossing, pipeline size and location, and type of utility or material transported.
    b. Maximum utility operating pressure, type of pipe and joints, maximum test pressure and description of test procedures, wall thickness, and utility pipe classification.
    c. Type of sleeve/casing pipe (when allowed) including diameter, joints, and wall thickness.
    d. Protective coatings and corrosion control measures.
    e. Location of nearest shutoff valve on each side of the crossing.
    f. Location and details of thrust restraint.
    g. Design code(s) used for utility crossing.
    h. Location, including depth, of the Reclamation pipeline.
    i. Other existing utility easements in the immediate vicinity.
    j. Detectable warning tape will be required over trenched utilities.
    k. For trench backfill/compaction requirements, see Section 02302 – Compacting Earth Materials.
    l. Embankments will not be allowed within Reclamation's ROW where underground pipeline exists.
5. Disturbed areas shall be reseeded in accordance with Section 02924 – Seeding and Soil Supplements.

SECTION 02302 - COMPACTING EARTH MATERIALS

PART 1 GENERAL

1.01 REFERENCES

A. ASTM International (ASTM)

1.	ASTM D 422-63(2002)	Particle-Size Analysis of Soils
2.	ASTM D 653-07d	Terminology Relating to Soil, Rock, and Contained Fluids
3.	ASTM D 698-07	Laboratory Compaction Characteristics of Soil Using Standard Effort (12,400 ft-lbf/ft^3 (600 kN-m/m^3))
4.	ASTM D 1140-00(2006)	Amount of Material in Soils Finer than the No. 200 (75-μm) Sieve
5.	ASTM D 1556-07	Density and Unit Weight of Soil in Place by the Sand-Cone Method
6.	ASTM D 2216-05	Laboratory Determination of Water (Moisture) Content of Soil and Rock by Mass
7.	ASTM D 2487-06	Classification of Soils for Engineering Purposes (Unified Soil Classification System)
8.	ASTM D 2488-06	Description and Identification of Soils (Visual-Manual Procedure)
9.	ASTM D 4253-00(2006)	Maximum Index Density and Unit Weight of Soils Using a Vibratory Table
10.	ASTM D 4254-00(2006)	Minimum Index Density and Unit Weight of Soils and Calculation of Relative Density
11.	ASTM D 4318-05	Liquid Limit, Plastic Limit, and Plasticity Index of Soils
12.	ASTM D 4564-02a	Density of Soil in Place by the Sleeve Method
13.	ASTM D 4643-00	Determination of Water (Moisture) Content of Soil by the Microwave Oven Heating
14.	ASTM D 4718-87(2001)	Correction of Unit Weight and Water Content for Soils Containing Oversize Particles
15.	ASTM D 4914-99	Density of Soil and Rock in Place by the Sand Replacement Method in a Test Pit
16.	ASTM D 4959-07	Determination of Water (Moisture) Content of Soil by Direct Heating

n.	USBR 5530-89	Determining the Maximum Index Unit Weight of Cohesionless Soils
o.	USBR 5605-89	Determining Permeability and Settlement of Soils Containing Gravel
p.	USBR 7205-89	Determining Unit Weight of Soils In-Place by the Sand-Cone Method
q.	USBR 7215-89	Determining the Unit Weight of Soils In-Place by the Sleeve Method
r.	USBR 7220-89	Determining Unit Weight of Soils In-Place by the Sand Replacement Method in a Test Pit
s.	USBR 7221-89	Determining Unit Weight of Soils In-Place by the Water Replacement Method in a Test Pit
t.	USBR 7230-89	Determining Unit Weight and Moisture Content of Soil In-Place - Nuclear Moisture-Density Gauge
u.	USBR 7240-89	Performing Rapid Method of Construction Control
v.	USBR 7250-89	Determination of Percent Relative Density
w.	USBR 7255-89	Determining the Percent Compaction of Earthwork for Construction Control

1.02 DEFINITIONS

A. Use definitions from USBR 3900 or ASTM D 653.

B. Control Fraction: The portion of a soil sample consisting of particles smaller than a designated sieve size. The fraction is used to compare in-place unit weight with standard laboratory unit weight. The control sieve size depends on the laboratory test used (USBR 7230).

C. C-Value: The ratio expressed as a percentage of (1) in-place unit weight at fill moisture content to (2) the wet unit weight of a laboratory-compacted specimen prepared at fill moisture content as determined by the rapid method of construction control (USBR 7240, ASTM D 5080). The C-Value is a comparison of compactive effort of field compaction equipment to standard laboratory compactive effort.

D. D-value: The ratio expressed as a percentage of (1) in-place wet unit weight at fill moisture content to (2) laboratory maximum wet unit weight as determined from a compaction curve constructed at fill moisture content as determined by the rapid method of construction control. The D-value is the equivalent of percent compaction (USBR 7240, ASTM D 5080).

E. Percent Relative Compaction: The percent compaction of a cohesionless soil where the laboratory maximum density is determined by Maximum Index Unit Weight test (USBR 5530, ASTM D 4253).

F. Percent Relative Density - (D_d percent) : The ratio of, (1) the difference between void ratio of a cohesionless soil in the loosest state and any given void ratio, to (2) the difference between its void ratios in the loosest state and densest state (USBR 7250)

G. Special compaction: Compaction close to structures or in spaces not accessible by rollers.

1.03 PROJECT ENVIRONMENTAL REQUIREMENTS

A. Do not place and compact soil under following conditions:

1. Ambient air temperature below freezing.
2. Rain that creates puddles in clayey or silty materials.
3. Heat or wind or both that dries material below special moisture conditions.
4. Ice or snow pockets are visible in soil being placed.

PART 2 PRODUCTS

2.01 CLASSIFICATION

A. When required, classify earth materials using the Unified Soil Classification System (USCS) according to ASTM D 2487 (or USBR 5000) or ASTM D 2488 (or USBR 5005).

1. Gradation tests for classification: ASTM D 422 or D 1140 (USBR 5325, 5330, or 5335).
2. Atterberg limits testing for classification: ASTM D 4318 (USBR 5350, 5355, or 5360).

2.02 SOIL TYPES

A. Clean Fill:

1. Any soil classification except for Peat (PT), Organic Silts and Organic Clays (OL and OH), and Elastic Silt (MH).
2. Free of roots, stumps, limbs, vegetation, organic matter, and ice.
3. Does not contain construction debris, scrap materials, refuse, man-made wastes, or chemical or hydro-carbon contamination.

B. Do not use frozen soils.

C. Special Gradations/Plasticity

1. In some cases, such as embedment for buried pipe, special gradations and/or plasticity characteristics may be required. These requirements are given for each special material required in the appropriate section.

2.03 DESIGNATION OF SOILS FOR COMPACTION

A. Requirements for lift thickness, method of compaction, and method of determining degree of compaction depends on whether soil is considered to be silty or clayey, cohesionless, or cohesionless containing some silt and clay.

B. Silty or Clayey Soils:

1. Contain appreciable amounts of fines (generally more than 15 percent fines).
2. Classified as GM, GC, SM, SC, CL, ML, CH, or any dual symbol or borderline soil beginning with one of these symbols.

C. Cohesionless Soils:

1. Contain few fines (generally less than 5 percent fines).
2. Classified as GW, SW, GP, SP, or any borderline soil beginning with any of these symbols.

D. Cohesionless Soils Containing Some Clay and Silt:

1. Contain some clay and silt contain between 5 and 15 percent fines.
2. Classified with dual symbol soils such as GW-GM, GW-GC, GP-GM, GP-GC, SW-SM, SW-SC, SP-SM, SP-SC.

2.04 MAXIMUM PARTICLE SIZE

A. Backfill against specific structures:

1. Maximum particle size limitations described in appropriate sections.
2. Otherwise, no cobbles or boulders.

B. Compacted soil for embankment: No cobbles larger than 5 inches or boulders.

PART 3 EXECUTION

3.01 SURFACE PREPARATION

A. Clear, grub, and strip.

B. Prepare surface so that first compacted lift will be placed on firm, stable base. Compact surface to specified compaction, if necessary.

C. For water-retaining compacted fill, scarify and moisten surface to provide satisfactory bonding surface before placing layer of material to be compacted.

D. Do not place soil on frozen surface.

3.02 SOIL MOISTURE CONTENT

A. Moisten or aerate material, as necessary, to provide moisture content that will readily facilitate obtaining specified compaction. Add water to soil only in increments that will permit moisture content to be uniform and homogenous throughout each layer after mixing.

B. Silty and Clayey Soils:

1. Moisture content during compaction: Not greater than 2 percentage points wet or not less than 2 percentage points dry of optimum moisture content.

2. Add no more than 2 percent water to fill by sprinkling just prior to compaction when fill is clayey and contains dry clods of clay.

   a. If clayey borrow soil is more than 2 percent below optimum moisture, pre-conditioning and curing may be required to obtain uniform and homogenous distribution of moisture in the clods.

   b. Use of disks, harrows, or rakes may be required to blend moisture in the borrow area.

3. Moisture content will be determined as follows:

   a. Moisture content is determined on the minus no. 4 sieve size control fraction material.

   b. Variation from Optimum Moisture Content:

      1) Difference between optimum moisture and compaction moisture can be measured in accordance with ASTM D 5080 (or USBR 7240).

   c. Moisture Content Comparison:

      1) Optimum moisture content determined by ASTM D 698 (or USBR 5500).

      2) Compared to field compaction moisture content with moisture contents determined in accordance with:

         a) ASTM D 2216 (or USBR 5300), or

         b) ASTM D 6938 (USBR 7230). The moisture from the nuclear gage will require corrections for gage error for the specific soils tested and the moisture content of the total material may require adjustment for the control fraction (see USBR 7230, Method C; ASTM D 4718), or

c) ASTM D 4959, or ASTM D 4643 (USBR 5315), provided the results have been correlated to ASTM D 2216 (USBR 5300) for specific soil tested.

C. Cohesionless Soils:

1. Add water during compaction, as necessary, since these soils are free-draining.

3.03 PLACEMENT

A. Place soils to be compacted in horizontal layers.

B. If necessary, blend materials so that compacted fill is homogenous and free from lenses, pockets, streaks, voids, laminations, or other imperfections.

3.04 COMPACTION

A. Compact material with following methods and techniques appropriate to type of soil.

B. Silty or clayey material in water retaining embankment:

1. Compact with tamping rollers specified above.
2. Uniformly distribute roller passes.
3. Compact in horizontal layers to compacted thickness of 6 inches or less.
4. Scarify lifts as required for lift bonding.
5. Density:
   a. Percent Compaction, minimum: 95 percent, or
   b. C-Value and D-value, minimum: 95 percent
   c. As determined on portion of soil passing the No. 4 sieve.

C. Silty or clayey material:

1. Compact with mechanical impact tampers, tamping rollers, vibrating pad foot rollers, rubber tire rollers, other suitable compaction equipment, or equipment travel.
   a. Uniformly distribute equipment passes.
   b. Compact in horizontal layers to compacted thickness of 6 inches or less.
2. Special compaction: Compact with hand held impact tampers, or small tamping equipment.
   a. Uniformly distribute effort.
   b. Compact in horizontal layers to compacted thickness of 4 inches.
3. Density:

a. Percent Compaction, minimum: 95 percent, or

b. D-value, minimum: 95 percent

c. As determined on portion of soil passing the No. 4 sieve.

D. Cohesionless Soils Containing Some Silt and Clay:

1. Compact in accordance with the procedure above.

2. Density:

a. Percent Compaction, minimum: 95 percent, or

b. Relative Compaction, minimum: 95 percent.

c. Using whichever testing procedure result requires higher in-place dry density.

E. Adjustment:

1. Silty and clayey soils containing more than 50 percent gravel: Required D ratio or Percent Compaction may be adjusted in accordance with appropriate curve on Figure 4 in USBR 5605.

F. Demonstration:

1. Lift thicknesses may vary depending on equipment and methods. Before changing requirements in this section, demonstrate that required density will be obtained.

3.05 MEASURE OF COMPACTION

A. Degree of soil compaction will be determined by one of the following.

B. Silty or clayey soils:

1. Unit weight of soils in-place:

a. ASTM D 1556 (or USBR 7205), or

b. ASTM D 4914 (or USBR 7220), or

c. ASTM D 5030 (or USBR 7221), or

d. ASTM D 6938 (or USBR 7230).

2. Percent Compaction will be determined by one of the following:

a. Rapid Method: ASTM D 5080 (or USBR 7240).

b. Laboratory Compaction Test: Comparison of in-place density of minus no. 4 sieve size control fraction to laboratory maximum dry density as determined by ASTM D 698, Procedure A (or USBR 5500).

c. Silty and clayey soils containing more than 5 percent gravel:

1) In-place unit weight of minus no. 4 size control fraction determined by screening gravel, washing, and determining mass and volume by assuming surface saturated dried moisture as outlined in ASTM D 4718 (USBR 7205).

3.06 FIELD QUALITY ASSURANCE

A. Testing

1. The Government or its representative will perform tests as required to verify that type of soil used, placement of soil, and compaction of soil conform to contract requirements.
2. Notify the Government 24 hours before compaction work begins and 24 hours before significant change in compaction operations (major change in equipment or procedure used).
3. Notify the Government immediately of equipment change due to breakdown, or re-deployment.

B. Testing Frequency

1. Frequency of testing is at discretion of the Government.
2. Greater frequency of testing is normally performed at beginning of new work, new work crew, or new equipment.

C. Tests:

1. Standards listed in Table 02302A - Standard Used for Testing, will be used by the Government or its representative for testing compacted soil for conformance with specification requirements. Substitution or modification of standards shall be done only with concurrence of all parties.

Table 02302A - Standard Used For Testing

PROCEDURE	STANDARD NO.
Soil Classification	ASTM D 2487 (or USBR 5000) ASTM D 2488 (or USBR 5005)
Gradation Analysis	ASTM D 422 (or USBR 5325, 5330, 5335)
Atterberg Limits	ASTM D 4318 (or USBR 5350, 5355, 5360)
Moisture Content	ASTM D 2216 (or USBR 5300) ASTM D 6938 (or USBR 7230) ASTM D 4643 (or USBR 5315)
Relative Density of Cohesionless Soils	ASTM D 4253 and ASTM D 4254 (or USBR 5525 and 5530 and 7250)

Table 02302A - Standard Used For Testing

PROCEDURE	STANDARD NO.
In-Place Density:	
Sand Cone	ASTM D 1556 (or USBR 7205)
Test Pits	ASTM D 4914 (or USBR 7220)
	ASTM D 5030 (or USBR 7221)
Sleeve	ASTM D 4564 (or USBR 7215)
Nuclear	ASTM D 6938
Rapid Construction Control	ASTM D 5080 (or USBR 7240)
Laboratory Maximum Density	ASTM D 698, Procedure A (USBR 5500)

D. Contractor Support

1. Provide timely access to areas for density testing and excavate and level an area in compacted material to provide a surface for testing.
   a. Fills compacted by sheepsfoot rollers are normally tested one or two lifts below surface.
2. When density is being measured by a sand-cone device (ASTM D 1556, USBR 7205), cease construction activity in immediate vicinity of testing.
3. Dig test pits as requested to examine compacted soil against structures or pipe.
4. Backfill test pits to original requirements.
5. Provide warning lights, flags, or other safety devices as needed by testing personnel.
6. Provide adequate lighting for performing test if required because of darkness.

END OF SECTION

SECTION 02924 - SEEDING AND SOIL SUPPLEMENTS

PART 1 GENERAL

1.01 DEFINITIONS

A. Pure live seed content: Weight of seed times percent purity times percent germination.

1.02 DELIVERY STORAGE AND HANDLING

A. Seed containers:

1. Sealed.
2. Labeled:
   a. Identify seed origin on label.
      1) Intrastate shipping: In accordance with State Seed Laws and Regulations.
      2) Interstate shipping: In accordance with U.S. Department of Agriculture Rules and Regulations under the Federal Seed Act.

PART 2 PRODUCTS

2.01 SEED

A. Weed seeds classified by State Seed Department:

1. Prohibited noxious weeds: None
2. Restricted noxious weeds: 0.5 percent maximum, by weight.

B. Seed mixture:

1. Purity, minimum: 85 percent.
2. Germination, minimum: 85 percent.
   a. Germination test: Less than 1 year old at time of seeding.
3. Uniform mixture shown in Table 02924A - Seed Mixture.

Table 02924A - Seed Mixture

Common Name	Scientific Name	Seeding Rate (Pounds pure live seed per acre)
Pubescent wheatgrass	*Agropyron Trichophorum*	3
Western wheatgrass	*Pascopyrum Smithii*	3
Sid oats grama	*Bouteloua Curtipendula*	2

2.02 FERTILIZER

A. Agricultural grade nitrogen fertilizer and phosphate fertilizer.

1. Nitrogen fertilizer: Urea (46-0-0).

2.03 STRAW MULCH

A. Wheat or barley straw.

B. Free of mold or other evidence of decomposition.

C. Free from weed seed.

2.04 HYDROMULCH

A. Silva-Fiber, manufactured by Weyerhauser, Tacoma WA, 98477; Spray Mulch X-80 manufactured by Pacific Wood Fibers, PO Box 2109, Redmond WA 98052; or equal, having the following essential characteristics:

1. Wood cellulose fiber.
2. No germination or growth inhibiting factors.
3. Dyed appropriate color to allow visual metering of application.
4. Evenly dispersed and suspended when agitated in water.
5. Forms blotter like ground cover that readily absorbs water and allows infiltration to underlying soil.

2.05 TACKIFIER

A. Mixture of at least three specially blended compatible hydrocolloids.

1. One hydrocolloid will act as a slippery agent during suspension.
2. Will form loose, long-chain-like film on drying
3. No growth or germination inhibiting factors.
4. Hydrates and disperses in circulating water to form homogeneous slurry.
5. Equilibrium air dry moisture content at time of manufacture of 8 percent, plus or minus 2 percent.
6. Minimum water holding capacity: 6-1/2 times weight of dry material.

PART 3 EXECUTION

3.01 SEEDBED PREPARATION

A. Complete prior to seeding, and mulching or hydromulching.

B. Scarify or harrow and rake topsoil to minimum depth of three inches.

C. Remove stiff clods, lumps, roots, litter, stones, and other foreign material greater than 6 inches in size from the surface. Dispose of removed materials by removal from the site.

D. Fill or smooth topsoil surface to remove rills, gullies and depressions.

E. Protect prepared topsoil surfaces from erosion and washouts. Repair damaged surfaces as required.

3.02 SEEDING

A. Seed applied by: (1) broadcast seeding followed by mulching or hydromulching, (2) drilling seed followed by mulching, (3) hydroseeding followed by hydromulching, or (4) hydroseeding and hydromulching.

B. Apply seed mixture at rate specified in Table 02924A - Seed Mixture.

C Seed only between September 1 and November 1 of each year.

D. Do not seed or fertilize when ambient temperature is below 38 degrees F without approval of the COR.

E. Do not seed or fertilize when ground is snow covered.

F. Do not seed, fertilize, or mulch, or hydroseed when wind velocities prevent uniform application of materials or would drift materials.

G. Apply nitrogen fertilizer uniformly at a rate of 30 pounds of nitrogen content per acre (65 pounds per acre of Urea).

3.03 BROADCAST SEEDING

A. Broadcast seed only in areas not accessible for drilling or hydroseeding.

B. Apply seed and fertilizer separately.

C. Mechanical broadcasting:

1. Equipment:

   a. Centrifugal type.

   b. Pull type similar to fertilizer spreader.

2. Designed and regulated to apply seed uniformly at proper rate per acre.

D. Hand Broadcasting:

1. By hand broadcaster.

2. By hand.

3. Uniformly applied.

E. Cover seed with soil to depth of 1/4-inch to 1/2-inch immediately after broadcasting.

1. Use hand rake or float.
2. Do not use log chain or similar device.

3.04 DRILLING SEED

A. Regulate drill to uniformly distribute seed at rate specified and cover with soil depth of 1/4-inch to 1/2-inch.

B. Apply seed and fertilizer separately.

C. Drill crosswise to general slope where possible to safely operate equipment.

3.05 MULCHING

A. Spread within 2 days of spreading seed.

B Rate: 2 tons per acre uniformly spread

C. Anchor with threader.

1. Operate crosswise to slope.
2. Depth: 3 to 4 inches.
3. Interval: 6 to 12 inches across slope.

3.06 HYDROSEEDING

A. Seed slurry:

1. Mix to keep homogeneous.
2. Ingredients:
   a. Water
   b. Seed
   c. Wood cellulose fiber mulch:
      1) Rate: 1,000 pounds per acre at 10 percent moisture content.
      2) Add to water slurry after seed.
   d. Fertilizer may be applied with hydroseeding.
3. Maximum time between batching slurry and application: 1 hour.

B. Spray apply seed slurry mix uniformly.

C. Use mulch coloring as metering agent.

D. Apply seed slurry before mulch slurry.

3.07 HYDROMULCHING

A. Mulch slurry:

1. Mix to keep homogeneous.
2. Ingredients:
   a. Water.
   b. Tackifier.
   c. Wood cellulose fiber mulch: 3,000 pounds per acre at 10 percent moisture content.
   d. Nitrogen fertilizer may be applied with hydromulching.
3. Maximum time between batching slurry and application: 1 hour.

B. Spray apply mulch slurry mix uniformly.

C. Use mulch coloring as metering agent.

D. Apply mulch slurry within 24 hours after applying seed.

3.08 HYDROSEEDING AND HYDROMULCHING

A. Slurry:

1. Mix to keep homogeneous.
2. Ingredients:
   a. Water
   b. Tackifier
   c. Seed
   d. Wood cellulose fiber mulch:
      1) Rate: 4,000 pounds per acre at 10 percent moisture content.
      2) Add to water slurry after seed.
   e. Fertilizer may be applied with hydroseeding.
3. Maximum time between batching slurry and application: 1 hour.

B. Spray apply slurry mix uniformly.

C. Use mulch coloring as metering agent.

END OF SECTION

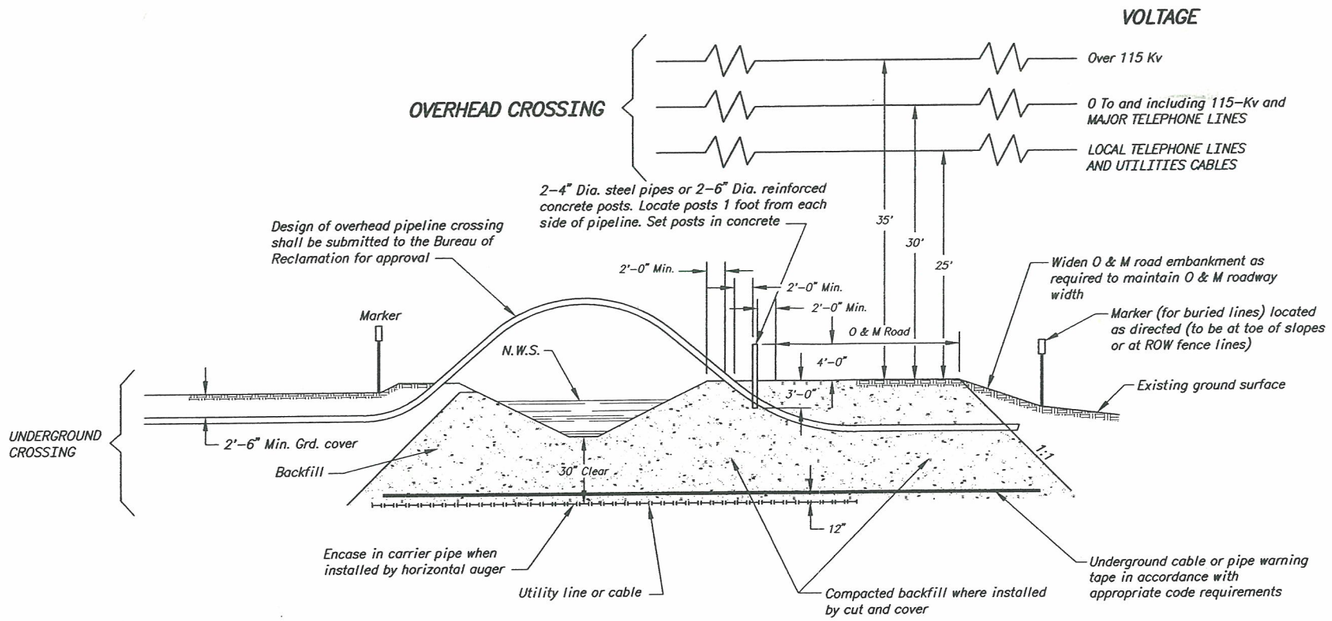

TYPICAL SECTION
OPEN CANAL, LATERAL OR DRAIN CROSSINGS

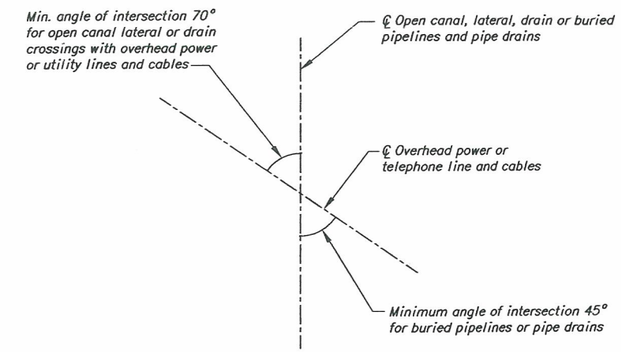

CROSSING PLAN

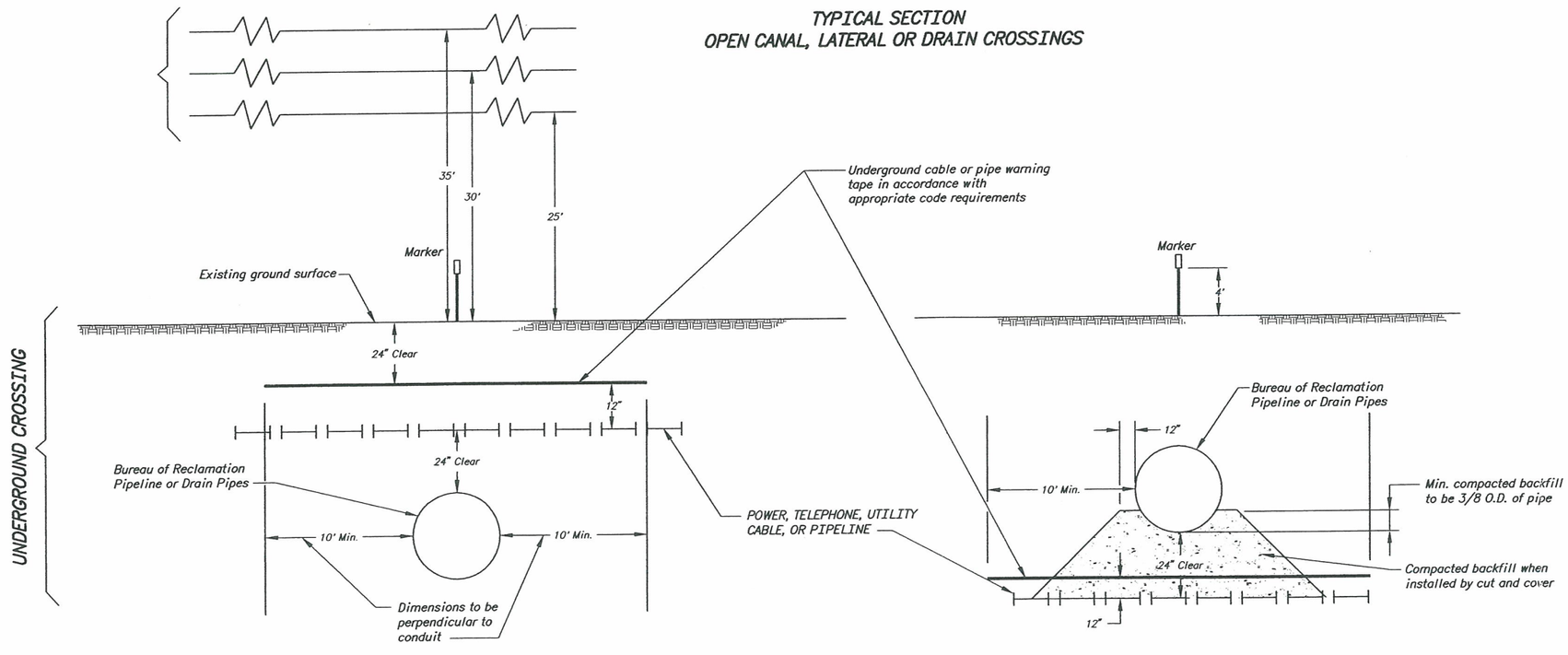

TYPICAL SECTION
PIPELINE OR DRAIN CROSSING

NOTES

1. Drawing is not to scale.
2. Overhead crossing clearances are minimum for all conditions.
3. Any additional clearances or permits required for construction shall be provided by the Contractor.
4. Conductor clearance shown is for 60° F and final unlocked sag.

REV NO		
1	03/14/2002 600- L.K.L., P.E.	REDRAWN AND REVISED

ALWAYS THINK SAFETY

UNITED STATES
DEPARTMENT OF THE INTERIOR
BUREAU OF RECLAMATION
PICK-SLOAN MISSOURI BASIN PROGRAM

STANDARD CROSSING & CLEARANCE REQ.

UTILITY LINES AND CABLES

DESIGNED D. ARBUTHNOT — TECH. APPROVAL S.SHIMAMOTO
DRAWN J. POITRA — SUBMITTED D.ARBUTHNOT
CHECKED D. ARBUHNOT — APPROVED J.M.VERZUH

CADD SYSTEM	CADD FILENAME	DATE AND TIME PLOTTED
AutoCAD	000008LY	03/15/02
BILLINGS, MONTANA	01/11/2002	40-600-51

SHEET 1 OF 1

-This page intentionally left blank-

Vandalia South Canal

Vandalia South Canal
Glasgow Unit, Milk River Project-Montana
S1/2, Section 12, T27N, R41E, Valley County

The Vandalia South Canal delivers irrigation water from the Milk River to farmlands located along the south side of the Milk River. The canal is approximately 46 miles long and has a diversion capacity of 300 cubic feet per second. The irrigation season normally runs from mid-April through September 30th of each year. Depending on snow-pack and rainfall, the irrigation season can vary in length.

The proposed XL pipeline will cross the canal at approximate Station 2375+00±50. Exhibit A shows the proposed pipeline crossing with respect to the canal. Exhibit B shows the profile of the canal in the vicinity of the pipeline crossing and the typical cross section of the canal.

Below are the original design dimensions of the canal in the vicinity of the proposed pipeline crossing. Actual dimensions may vary from these values. Keystone XL Pipeline is responsible for verifying actual field dimensions.

- Bottom width—5.00 feet
- Side slopes—1.5:1
- Water depth—3.10 feet
- Downhill bank height—5.00 feet

All rights-of-ways for the Glasgow Unit were obtained using the 1890 Canal Act. Reclamation's easement under the 1890 Canal Act can be described as follows:

> The 1890 Canal Act granted to the United States an unrestrained right-of-way for ditches and canal for any lands west of the 100th Meridian that were patented after that date. The easements are reserved in the original land patents issued for these lands and are blanket easements covering the entire tracts patented. The 1890 Act granted authority to place the ditches and canals wherever needed and as a result no legal description of the canal was necessary or required to be recorded. Wherever the canal is located is the defined area of use. This includes any supporting features including but not limited to access roads and areas alongside the canal needed for operation and maintenance of the canal.

Because the U.S. easement is first in time, any following easements granted by the underlying landowner will be subject to the easement rights of the United States and cannot unreasonably interfere with the U.S. project.

Construction requirements:

- The pipeline must be installed to ensure the minimum clearances shown on Drawing 40-600-51.
- The canal must remain in operation during the irrigation season. If the pipeline crossing is made during the irrigation season, the pipe must be bored under the canal.
- If the pipeline crossing is made during the non-irrigation season, the canal may be open cut. If the canal is open cut, all backfill within the easement boundaries shall be

compacted to 95% density in accordance with specifications Section 02302 – Compacting Earth Materials.

- All disturbed areas shall be shaped to facilitate natural drainage and reseeded in accordance with Section 02924 – Seeding and Soil Supplements.
- Pipeline markers and signs shall be installed on both sides of the canal.
- Provide 5 days prior notice work on the Government easement. No work shall be done without the presence of a Government Representative. Contact Mr. Steve Stebbleton, Field Manager, Glasgow Irrigation District at 406-228-2346 and Mr. Steve Davies, Montana Area Office at 406-247-7322.

-This page intentionally left blank-

Approximate Keystone Pipeline Route

INDEX MAP

EXPLANATION

- CANAL—BUREAU OF RECLAMATION
- TRANSMISSION LINE—W.A.P.A.
- INTERCONNECTION
- POWER PLANT—U.S.C.E.
- PUMPING PLANT—W.A.P.A.
- AREA BENEFITED BY PROJECT WORKS
- ★ PROJECT HEADQUARTERS
- W.A.P.A. WESTERN AREA POWER ADMINISTRATION
- U.S.C.E. UNITED STATES CORPS OF ENGINEERS
- WILDLIFE MANAGEMENT AREA

UNITED STATES
DEPARTMENT OF THE INTERIOR
JAMES G. WATT, SECRETARY
BUREAU OF RECLAMATION
ROBERT N. BROADBENT, COMMISSIONER

MILK RIVER PROJECT

MONTANA

GREAT PLAINS REGION

MAP NO. 15-600-137

NOVEMBER 1983

☆U.S. GOVERNMENT PRINTING OFFICE: 1993—838-935

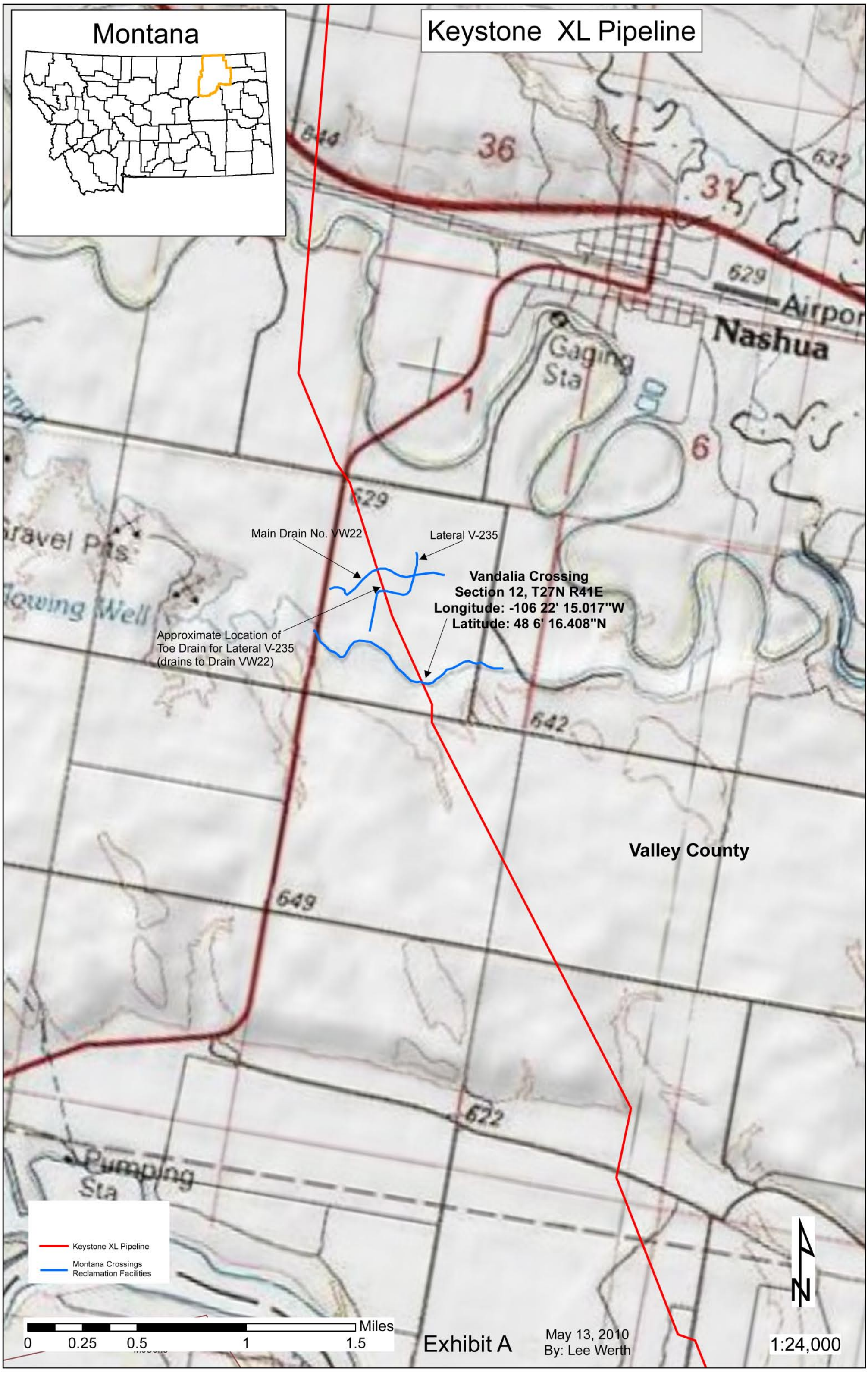
Montana
Keystone XL Pipeline
Main Drain No. VW22
Lateral V-235
Vandalia Crossing
Section 12, T27N R41E
Longitude: -106 22' 15.017"W
Latitude: 48 6' 16.408"N
Approximate Location of
Toe Drain for Lateral V-235
(drains to Drain VW22)
Nashua
Valley County
Keystone XL Pipeline
Montana Crossings
Reclamation Facilities
Miles
0 0.25 0.5 1 1.5
Exhibit A
May 13, 2010
By: Lee Werth
1:24,000

Profile View - Keystone Pipeline Crossing Vandalia Main Canal

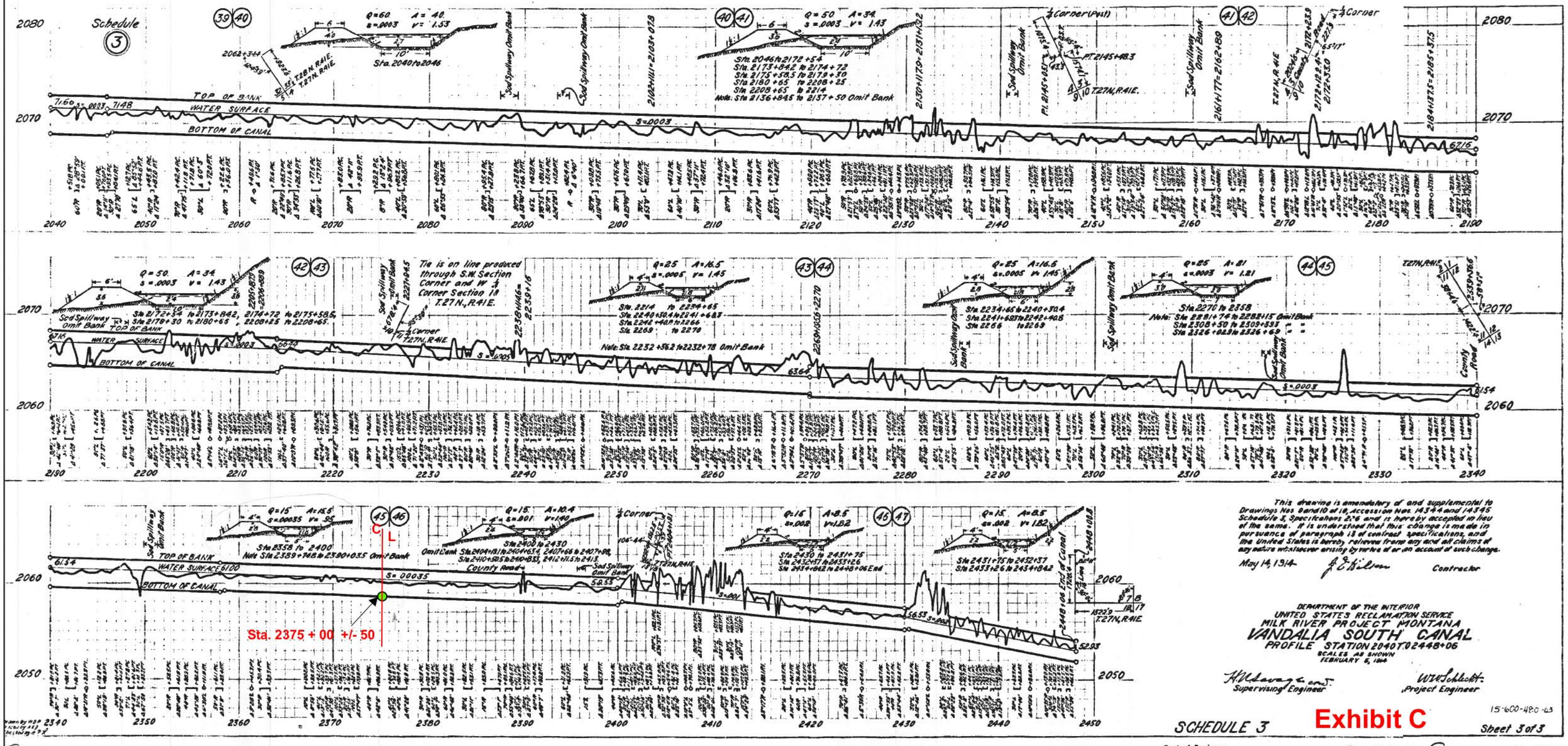

This drawing is amendatory of and supplemental to Drawings Nos 9 and 10 of 18, Accession Nos. 14344 and 14345 Schedule 3, Specifications 276 and is hereby accepted in lieu of the same. It is understood that this change is made in pursuance of paragraph 13 of contract specifications, and the United States is hereby relieved from any and all claims of any nature whatsoever arising by virtue of or on account of such change.

May 14, 1914 — Contractor

DEPARTMENT OF THE INTERIOR
UNITED STATES RECLAMATION SERVICE
MILK RIVER PROJECT MONTANA
VANDALIA SOUTH CANAL
PROFILE STATION 2040 TO 2448+06
SCALES AS SHOWN
FEBRUARY 6, 1914

Supervising Engineer — Project Engineer

15-600-480-63

SCHEDULE 3

Exhibit C

Sheet 3 of 3

Project Engineer May 14, 1914 February 1914

Supervising Engineer February 21, 4 May 20, 1914

C-464 G-1

S-5152

-This page intentionally left blank-

Lateral V-235

Lateral V-235
Glasgow Unit, Milk River Project-Montana
W1/2, Section 12, T27N, R41E, Valley County

Lateral V-235 delivers irrigation water from the Vandalia South Canal to farmlands located along the south side of the Milk River. The irrigation season normally runs from mid-April through September 30th of each year. Depending on snow-pack and rainfall, the irrigation season can vary in length. Lateral V-235 also has a toe drain system that discharges into Main Drain VW22.

Exhibit A shows the proposed pipeline crossing with respect to the lateral. A plan and profile drawing is not available for the lateral or the toe drain. Keystone XL Pipeline is responsible for verifying actual field conditions.

All rights-of-ways for the Glasgow Unit were obtained using the 1890 Canal Act. Reclamation's easement under the 1890 Canal Act can be described as follows:

> The 1890 Canal Act granted to the United States an unrestrained right-of-way for ditches and canal for any lands west of the 100th Meridian that were patented after that date. The easements are reserved in the original land patents issued for these lands and are blanket easements covering the entire tracts patented. The 1890 Act granted authority to place the ditches and canals wherever needed and as a result no legal description of the canal was necessary or required to be recorded. Wherever the canal is located is the defined area of use. This includes any supporting features including but not limited to access roads and areas alongside the canal needed for operation and maintenance of the canal.

Because the U.S. easement is first in time, any following easements granted by the underlying landowner will be subject to the easement rights of the United States and cannot unreasonably interfere with the U.S. project.

Construction requirements:

- The pipeline must be installed to ensure the minimum clearances shown on Drawing 40 600-51.
- The canal and canal toe drain system must remain in operation during the irrigation season. If the pipeline crossing is made during the irrigation season, the pipe must be bored under the canal.
- If the pipeline crossing is made during the non-irrigation season, the canal may be open cut. If the canal is open cut, all backfill within the easement boundaries shall be compacted to 95% density in accordance with specifications Section 02302 – Compacting Earth Materials.
- All disturbed areas shall be shaped to facilitate natural drainage and reseeded in accordance with Section 02924 – Seeding and Soil Supplements.
- Pipeline markers and signs shall be installed on both sides of the canal.
- Provide 5 days prior notice work on the Government easement. No work shall be done without the presence of a Government Representative. Contact Mr. Steve Stebbleton,

Field Manager, Glasgow Irrigation District at 406-228-2346 and Mr. Steve Davies, Bureau of Reclamation, Montana Area Office at 406-247-7322.

Main Drain VW22

Main Drain VW22
Glasgow Unit, Milk River Project-Montana
W1/2, Section 12, T27N, R41E, Valley County

Main Drain VW22 carries surface and subsurface water off of farmlands to the Milk River. Flows occur year round, however they increase during the irrigation season which normally runs from mid-April through September 30th of each year. Depending snow-pack and rainfall, the irrigation season can vary in length.

Exhibit A shows the proposed pipeline crossing with respect to the drain. A plan and profile drawing is not available for the drain. Keystone XL Pipeline is responsible for verifying actual field conditions.

All rights-of-ways for the Glasgow Unit were obtained using the 1890 Canal Act. Reclamation's easement under the 1890 Canal Act can be described as follows:

> The 1890 Canal Act granted to the United States an unrestrained right-of-way for ditches and canal for any lands west of the 100th Meridian that were patented after that date. The easements are reserved in the original land patents issued for these lands and are blanket easements covering the entire tracts patented. The 1890 Act granted authority to place the ditches and canals wherever needed and as a result no legal description of the canal was necessary or required to be recorded. Wherever the canal is located is the defined area of use. This includes any supporting features including but not limited to access roads and areas alongside the canal needed for operation and maintenance of the canal.

Because the U.S. easement is first in time, any following easements granted by the underlying landowner will be subject to the easement rights of the United States and cannot unreasonably interfere with the U.S. project.

Construction requirements:

- The pipeline must be installed to ensure the minimum clearances shown on Drawing 40-600-51.
- The drain must remain in operation and the pipe must be bored under the drain.
- All disturbed areas shall be shaped to facilitate natural drainage and reseeded in accordance with Section 02924 – Seeding and Soil Supplements.
- Pipeline markers and signs shall be installed on both sides of the drain.
- Provide 5 days prior notice work on the Government easement. No work shall be done without the presence of a Government Representative. Contact Mr. Steve Stebbleton, Field Manager, Glasgow Irrigation District at 406-228-2346 and Mr. Steve Davies, Montana Area Office at 406-247-7322.

Glendive Mail Canal

Glendive Main Canal
Buffalo Rapids Project-Montana
NE1/4, Section 10, T13N, R53E, Dawson County

The Glendive Main Canal delivers irrigation water from the Yellowstone River to farmlands located along the north side of the Yellowstone River. The canal is approximately 34 miles long and has a diversion capacity of 330 cubic feet per second. The irrigation season normally runs from May 1st through September 30th of each year.

The proposed XL pipeline will cross the canal at approximate Station 309+00±10. Exhibit A shows the proposed pipeline crossing with respect to the canal. Exhibit B shows the plan view and the right of way widths. Exhibit C shows the profile and the typical cross section of the canal in the vicinity of the pipeline crossing.

Below are the original design dimensions of the canal in the vicinity of the proposed pipeline crossing. Actual dimensions may vary from these values. Keystone XL Pipeline is responsible for verifying actual field dimensions.

- Bottom width—12.00 feet
- Side slopes—1.5:1
- Water depth—6.4 feet
- Downhill bank height—9.00 feet
- Easement width—125 feet total (50 feet left of centerline and 75 feet right of centerline)

Construction requirements:

- The pipeline must be installed to ensure the minimum clearances shown on Drawing 40-600-51.
- The canal must remain in operation during the irrigation season. If the pipeline crossing is made during the irrigation season, the pipe must be bored under the canal.
- If the pipeline crossing is made during the non-irrigation season, the canal may be open cut. If the canal is open cut, all backfill within the easement boundaries shall be compacted to 95% density in accordance with specifications Section 02302 – Compacting Earth Materials.
- All disturbed areas shall be shaped to facilitate natural drainage and reseeded in accordance with Section 02924 – Seeding and Soil Supplements.
- Pipeline markers and signs shall be installed on both sides of the canal.
- Provide 5 days prior notice work on the Government easement. No work shall be done without the presence of a Government Representative. Contact Mr. Larry Heimbuch, Manager, Buffalo Rapids District No. 1 at 406-939-1750 and Mr. Steve Davies, Bureau of Reclamation, Montana Area Office at 406-247-7622.

-This page intentionally left blank-

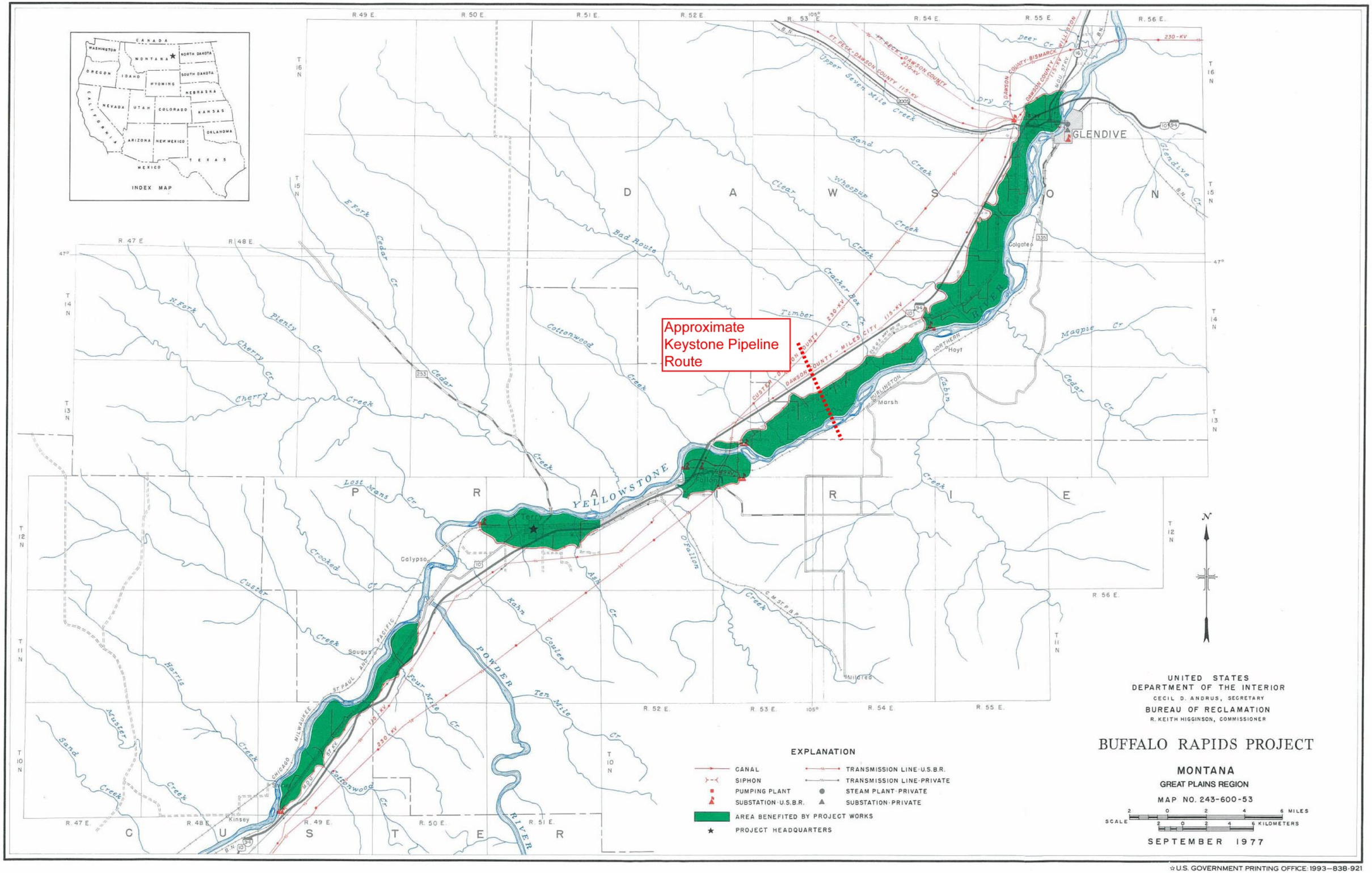

☆U.S. GOVERNMENT PRINTING OFFICE: 1993—838-921

Keystone Pipeline Crossing Glendive Main Canal

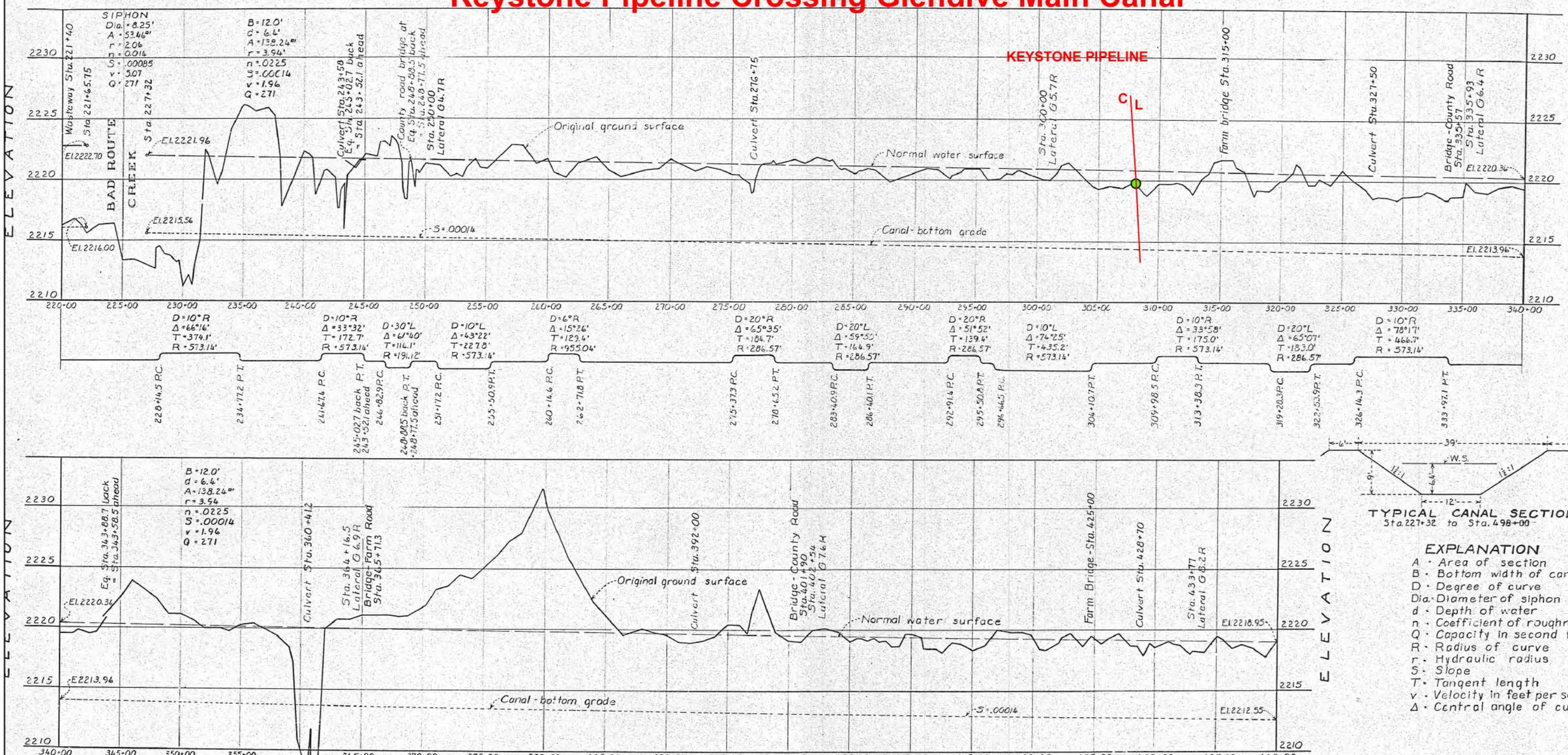

EXPLANATION

- A - Area of section
- B - Bottom width of canal
- D - Degree of curve
- Dia. - Diameter of siphon
- d - Depth of water
- n - Coefficient of roughness
- Q - Capacity in second feet
- R - Radius of curve
- r - Hydraulic radius
- S - Slope
- T - Tangent length
- v - Velocity in feet per second
- Δ - Central angle of curve

DEPARTMENT OF THE INTERIOR
BUREAU OF RECLAMATION
BUFFALO RAPIDS PROJECT - MONT.

MAIN CANAL - GLENDIVE UNIT

STA. 220+00 TO STA. 440+00

DRAWN: R.R.R.		SUBMITTED: Paul A. Jones	
TRACED: D.R.B.		RECOMMENDED:	
CHECKED: E.R.B.		APPROVED:	
4-A-3	GLENDIVE, MONTANA MARCH 5, 1938 SHEET 2 OF 8		243-605-140

REV. 5-25-38

Plan View - Keystone Pipeline Crossing Glendive Main Canal

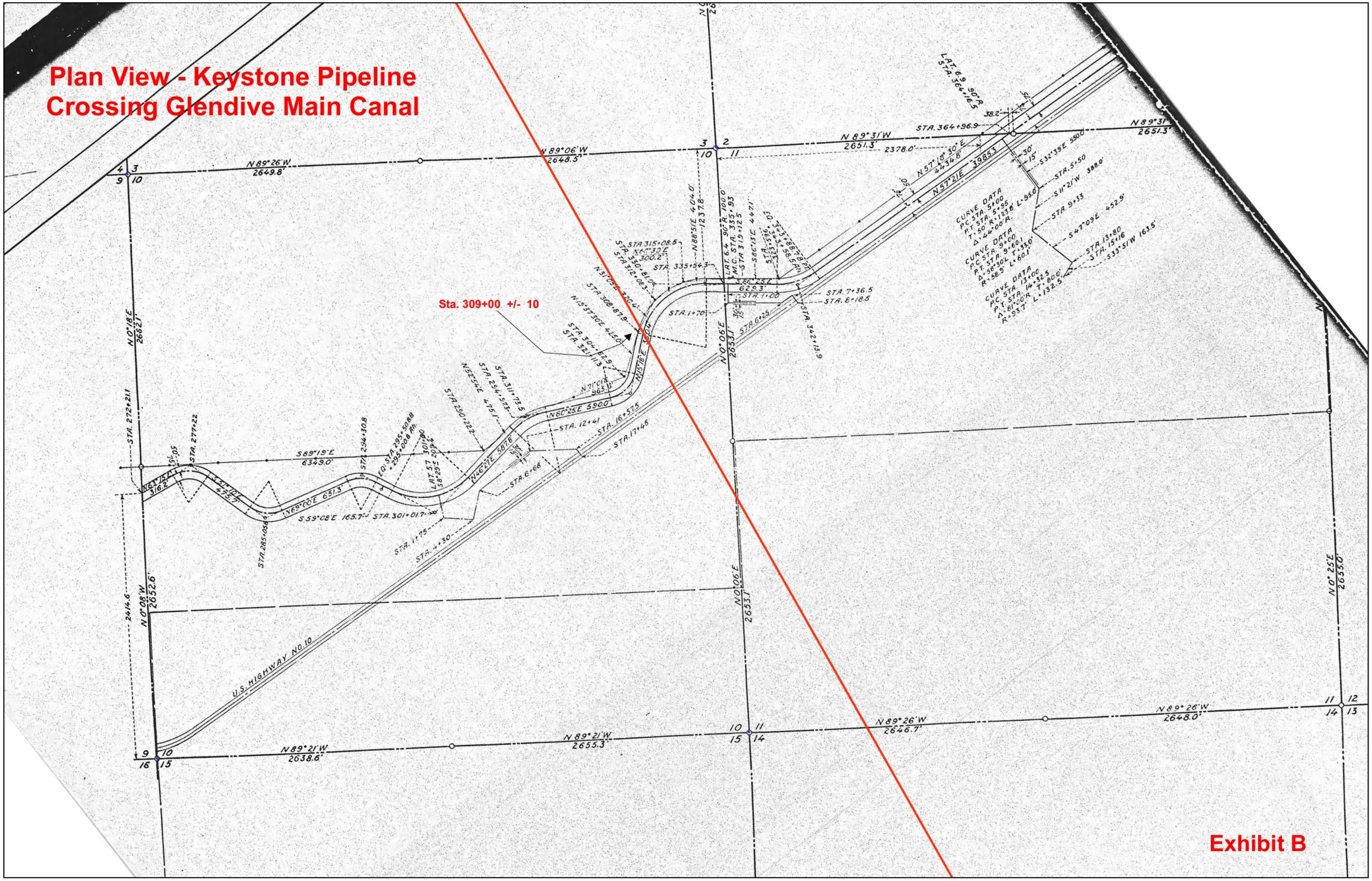

Exhibit B

Keystone Pipeline Crossing Glendive Main Canal

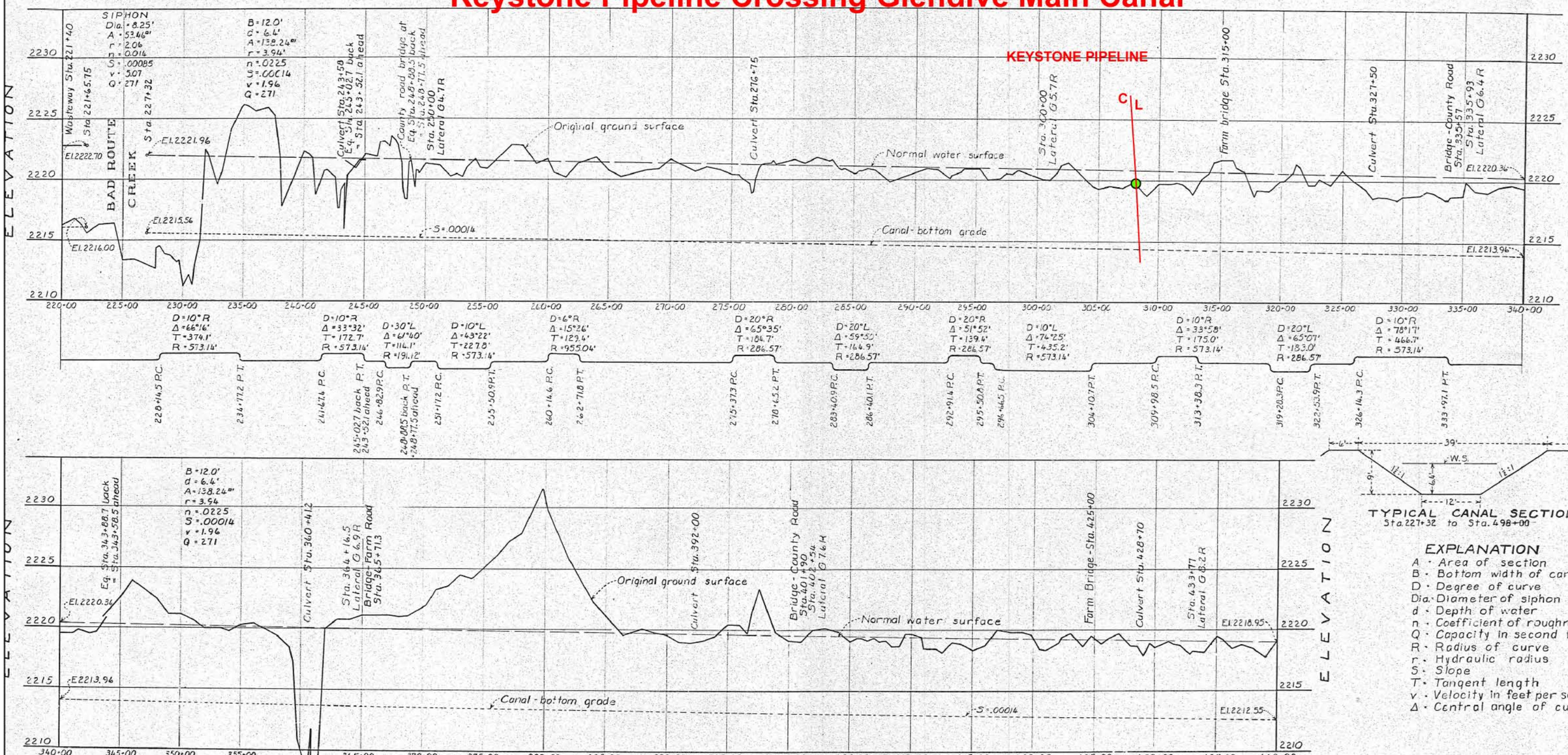

EXPLANATION

- A - Area of section
- B - Bottom width of canal
- D - Degree of curve
- Dia. - Diameter of siphon
- d - Depth of water
- n - Coefficient of roughness
- Q - Capacity in second feet
- R - Radius of curve
- r - Hydraulic radius
- S - Slope
- T - Tangent length
- v - Velocity in feet per second
- Δ - Central angle of curve

DEPARTMENT OF THE INTERIOR
BUREAU OF RECLAMATION
BUFFALO RAPIDS PROJECT - MONT.

MAIN CANAL - GLENDIVE UNIT

STA. 220+00 TO STA. 440+00

DRAWN: R.R.R.		SUBMITTED: Paul A. Jones	
TRACED: D.R.B.		RECOMMENDED:	
CHECKED: E.R.B.		APPROVED:	
4-A-3	GLENDIVE, MONTANA MARCH 5, 1938 SHEET 2 OF 8		243-605-140

REV. 5-25-38

Lateral 4.7 Pipeline

Lateral 4.7-Pipeline 2, Glendive Unit
Buffalo Rapids Project-Montana
SE1/4NW1/4, Section 14, T13N, R53E, Dawson County

Lateral 4.7-Pipeline 2 delivers irrigation water from the Glendive Main Canal to farmlands located along the north side of the Yellowstone River. The irrigation season normally runs from May 1st through September 30th of each year.

The Buffalo Rapids Irrigation District converted the original open lateral into a pipeline. Reclamation currently does not have any engineering data on the existing pipeline. Exhibit A shows the proposed pipeline crossing with respect to the pipeline.

Construction requirements:

- XL pipeline must coordinate with Mr. Larry Heimbuch, Manager, Buffalo Rapids District No. 1 at 406-939-1750 to obtain information concerning the Lateral pipeline
- The XL pipeline must be installed to ensure the minimum clearances shown on Drawing 40-600-51.
- The Lateral pipeline must remain in operation during the irrigation season.
- When the XL pipeline crossing is made, the existing Lateral pipeline will be carefully located to prevent damage. The Lateral pipeline shall be supported to prevent damage. All backfill under the pipe and for 10 feet on either side shall be compacted to 95% density in accordance with specifications Section 02302 – Compacting Earth Materials.
- All disturbed areas shall be shaped to facilitate natural drainage and reseeded in accordance with Section 02924 – Seeding and Soil Supplements.
- Pipeline markers and signs shall be installed on both sides of the Lateral pipeline or as directed by Mr. Larry Heimbuch, Manager, Buffalo Rapids District No. 1.
- Provide 5 days prior notice work on the Government easement. No work shall be done without the presence of a Government Representative. Contact Mr. Larry Heimbuch, Manager, Buffalo Rapids District No. 1 at 406-939-1750 and Mr. Steve Davies, Bureau of Reclamation, Montana Area Office at 406-247-7622.

Glendive Open Drain

Glendive Open Drain
Buffalo Rapids Project-Montana
SE1/4NW1/4, Section 14, T13N, R53E, Dawson County

Glendive Open Drain carries surface and subsurface water off of farmlands to the Yellowstone River. Flows occur year round, however they increase during the irrigation season which normally runs from May 1st through September 30th of each year.

Exhibit A shows the proposed pipeline crossing with respect to the drain. A plan and profile drawing is not available for the drain. Keystone XL Pipeline is responsible for verifying actual field conditions.

Construction requirements:

- The pipeline must be installed to ensure the minimum clearances shown on Drawing 40-600-51.
- The drain must remain in operation and the pipe must be bored under the drain.
- All disturbed areas shall be shaped to facilitate natural drainage and reseeded in accordance with Section 02924 – Seeding and Soil Supplements.
- Pipeline markers and signs shall be installed on both sides of the drain.
- Provide 5 days prior notice work on the Government easement. No work shall be done without the presence of a Government Representative.
- Contact Mr. Larry Heimbuch, Manager, Buffalo Rapids District No. 1 at 406-939-1750 and Mr. Steve Davies, Bureau of Reclamation, Montana Area Office at 406-247-7622.

Fullerton Canal

Fullerton Canal
North Loup Division, Pick-Sloan Missouri Basin Program-Nebraska
NE1/4 of the SE1/4, Section 28, T16N, R7W, Nance County

The Fullerton Canal delivers irrigation water from Davis Creek Dam to farmlands located along the North Loup and Loup Rivers. The canal is approximately 49 miles long and has a diversion capacity of 440 cubic feet per second. The irrigation season normally runs from May 1st through September 30th of each year. Depending on the year, the irrigation season can be run from April 1st through November 15th.

The proposed XL pipeline will cross the canal at approximate Station 2291+00±30. Exhibit A shows the proposed pipeline crossing with respect to the canal. Exhibit B shows the plan view and the right of way widths. Exhibit C shows the profile of the canal in the vicinity of the pipeline crossing. Exhibit D shows the typical cross section of the canal.

The following are the dimensions of the canal in the vicinity of the proposed pipeline crossing:

- Bottom width—10.00 feet
- Side slopes—1.5:1
- Water depth—3.10 feet
- Downhill bank height—5.00 feet
- Easement width—125 feet total (75 feet left of centerline and 50 feet right of centerline)

Construction requirements:

- The pipeline must be installed to ensure the minimum clearances shown on Drawing 40-600-51.
- The canal must remain in operation during the irrigation season. If the pipeline crossing is made during the irrigation season, the pipe must be bored under the canal.
- If the pipeline crossing is made during the non-irrigation season, the canal may be open cut. If the canal is open cut, all backfill within the easement boundaries shall be compacted to 95% density in accordance with specifications Section 02302 – Compacting Earth Materials.
- All disturbed areas shall be shaped to facilitate natural drainage and reseeded.
- Pipeline markers and signs shall be installed on both sides of the canal.
- Provide 5 days prior notice work on the Government easement. No work shall be done without the presence of a Government Representative. Contact Mr. Terry Seitz, McCook Field Office at 308-345-6470.

Exhibit 1

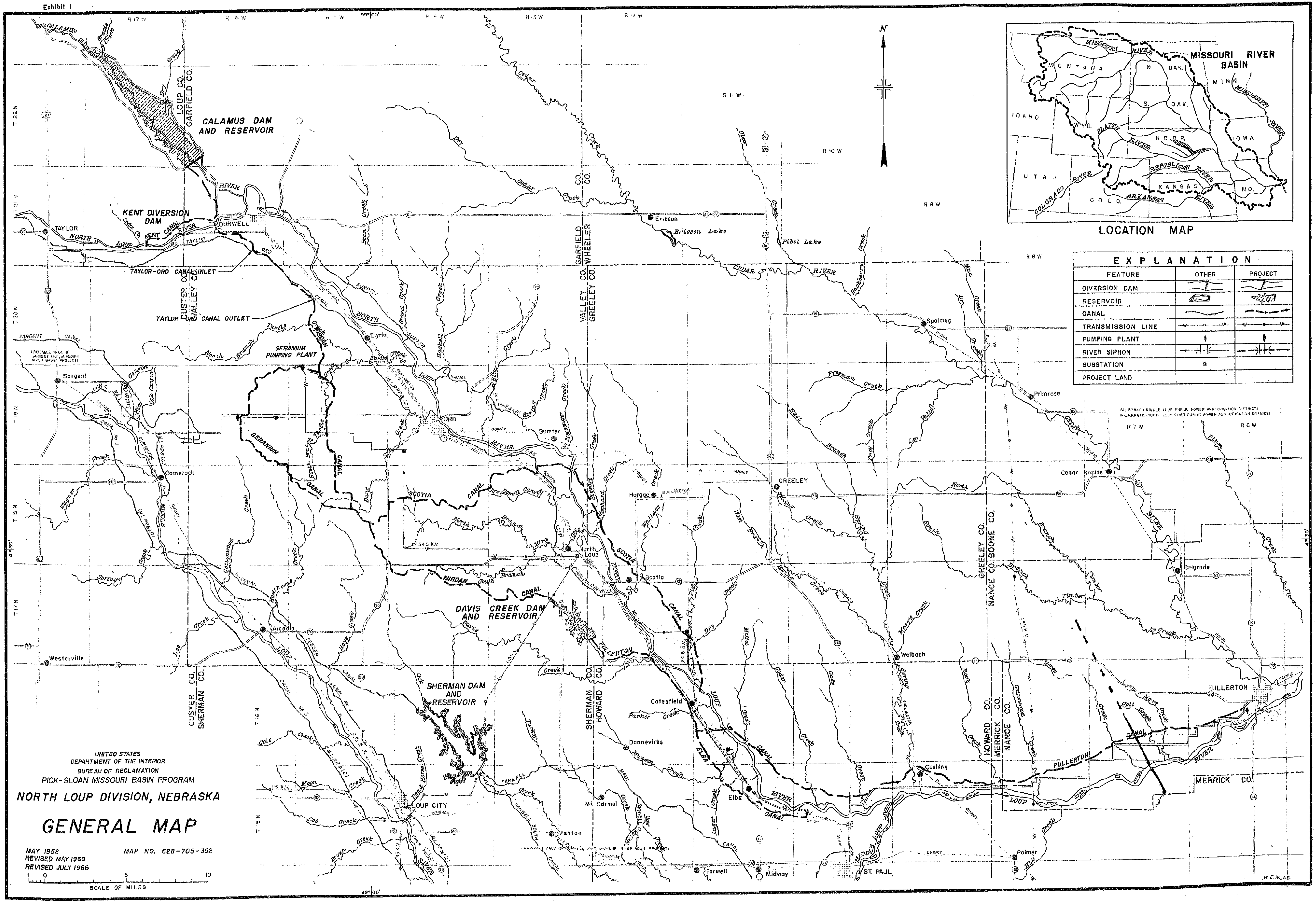

UNITED STATES
DEPARTMENT OF THE INTERIOR
BUREAU OF RECLAMATION
PICK-SLOAN MISSOURI BASIN PROGRAM
NORTH LOUP DIVISION, NEBRASKA
GENERAL MAP
MAY 1958
REVISED MAY 1969
REVISED JULY 1986
MAP NO. 628-705-352
SCALE OF MILES
0 5 10
LOCATION MAP
MISSOURI RIVER BASIN
MONTANA
N. DAK.
S. DAK.
MINN.
IDAHO
WYO.
NEBR.
IOWA
UTAH
COLO.
KANSAS
MO.
MISSOURI RIVER
MISSISSIPPI RIVER
PLATTE RIVER
REPUBLICAN RIVER
COLORADO RIVER
ARKANSAS RIVER
EXPLANATION
FEATURE
OTHER
PROJECT
DIVERSION DAM
RESERVOIR
CANAL
TRANSMISSION LINE
PUMPING PLANT
RIVER SIPHON
SUBSTATION
PROJECT LAND
CALAMUS DAM AND RESERVOIR
KENT DIVERSION DAM
KENT CANAL
TAYLOR-ORD CANAL INLET
TAYLOR-ORD CANAL OUTLET
GERANIUM PUMPING PLANT
GERANIUM CANAL
MIRDAN CANAL
SCOTIA CANAL
DAVIS CREEK DAM AND RESERVOIR
FULLERTON CANAL
SHERMAN DAM AND RESERVOIR
ELBA CANAL
NORTH LOUP RIVER
LOUP RIVER
MIDDLE LOUP RIVER
CEDAR RIVER
LOUP CO.
GARFIELD CO.
CUSTER CO.
VALLEY CO.
GREELEY CO.
WHEELER CO.
SHERMAN CO.
HOWARD CO.
NANCE CO.
BOONE CO.
MERRICK CO.
Taylor
Burwell
Ericson
Ericson Lake
Pibel Lake
Spalding
Primrose
Elyria
Sargent
Ord
Sumter
Comstock
Greeley
Horace
Cedar Rapids
North Loup
Scotia
Belgrade
Arcadia
Westerville
Wolbach
Cotesfield
Dannevirke
Fullerton
Cushing
Loup City
Mt. Carmel
Elba
Ashton
Palmer
Farwell
Midway
St. Paul
R 17 W
R 16 W
R 15 W
R 14 W
R 13 W
R 12 W
R 11 W
R 10 W
R 9 W
R 8 W
R 7 W
R 6 W
T 22 N
T 21 N
T 20 N
T 19 N
T 18 N
T 17 N
T 16 N
T 15 N
99°00'
41°30'
W.E.W., A.S.

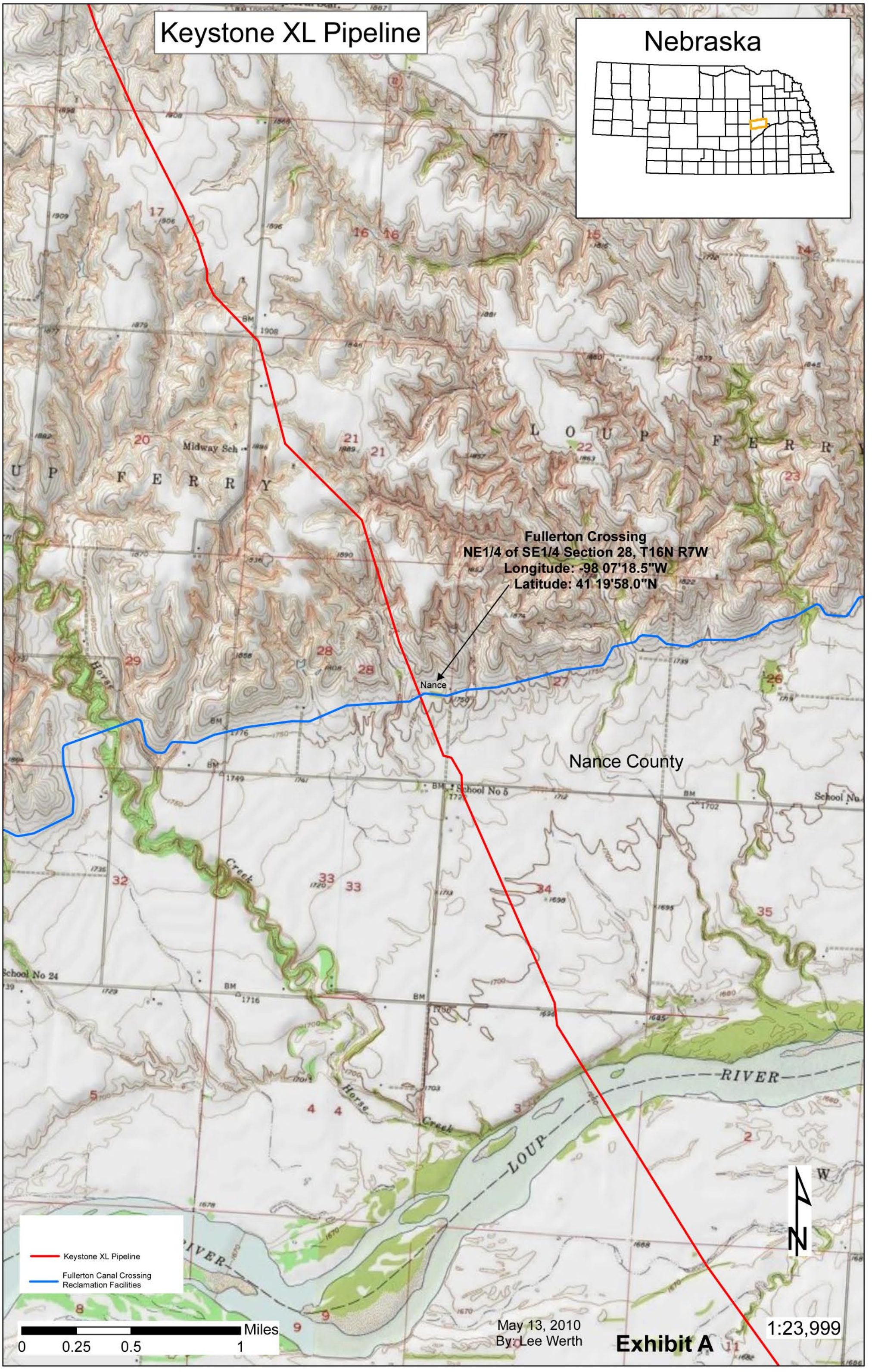
Keystone XL Pipeline
Nebraska
Fullerton Crossing
NE1/4 of SE1/4 Section 28, T16N R7W
Longitude: -98 07'18.5"W
Latitude: 41 19'58.0"N
Nance
Nance County
Midway Sch
School No 5
School No 24
Horse Creek
LOUP RIVER
Keystone XL Pipeline
Fullerton Canal Crossing
Reclamation Facilities
Miles
0 0.25 0.5 1
May 13, 2010
By: Lee Werth
Exhibit A
1:23,999

Plan View - Keystone Pipeline Crossing Fullerton Main Canal

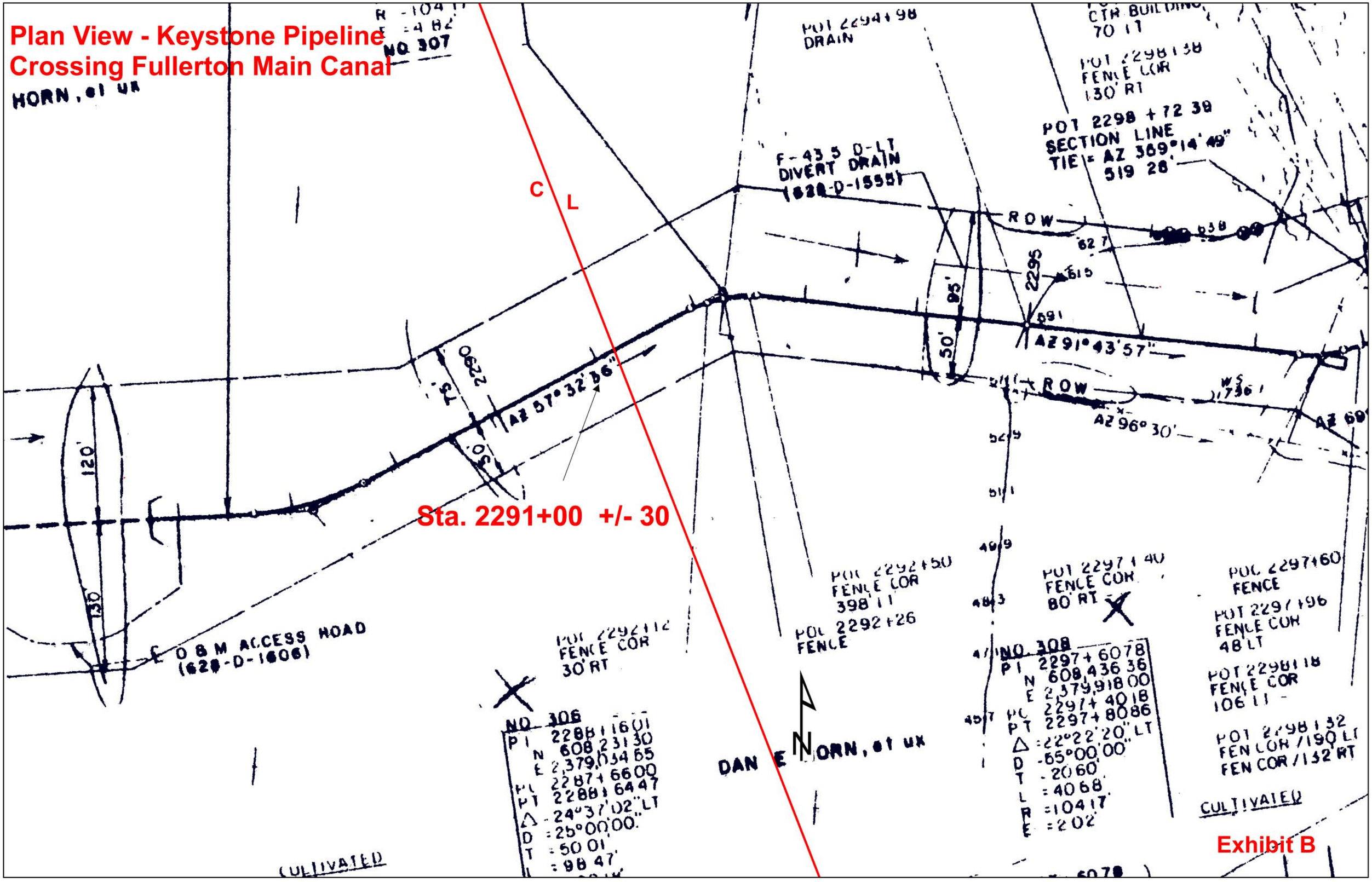

Profile View - Keystone Pipeline Crossing Fullerton Main Canal

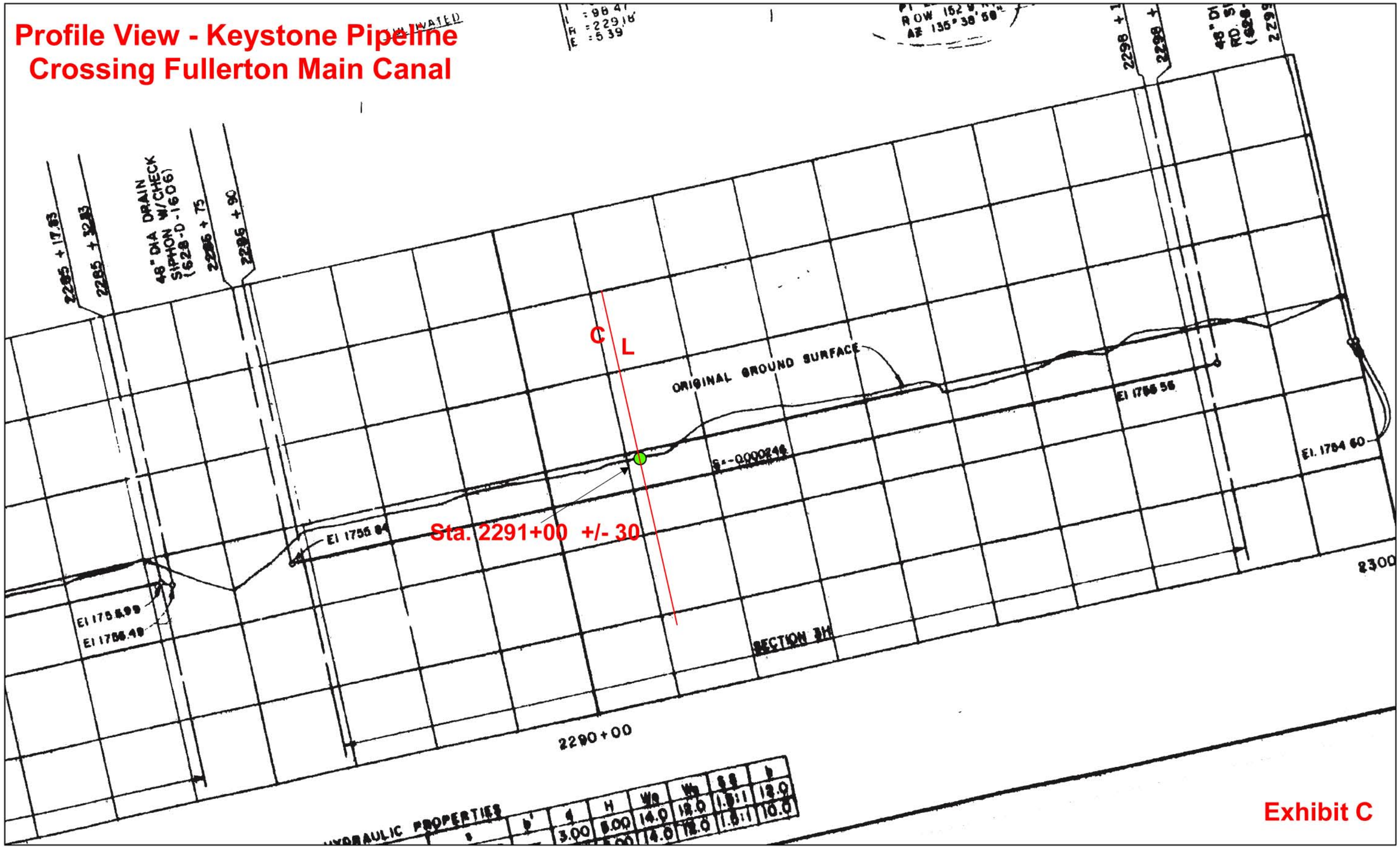

Exhibit C

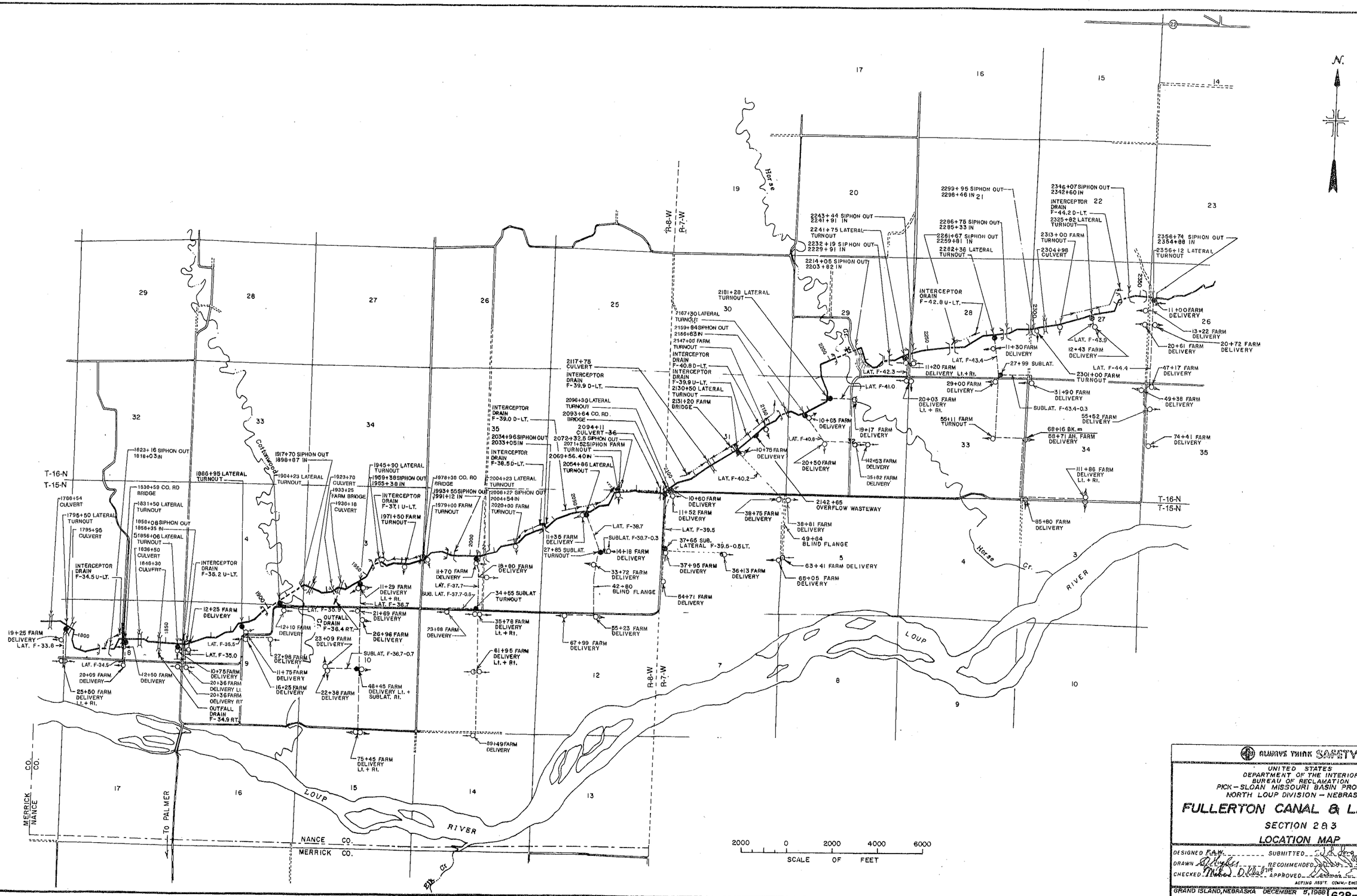

ALWAYS THINK SAFETY

UNITED STATES
DEPARTMENT OF THE INTERIOR
BUREAU OF RECLAMATION
PICK-SLOAN MISSOURI BASIN PROGRAM
NORTH LOUP DIVISION - NEBRASKA

FULLERTON CANAL & LATERALS

SECTION 2 & 3

LOCATION MAP

DESIGNED F.A.W. SUBMITTED
DRAWN RECOMMENDED
CHECKED APPROVED
ACTING ASS'T. COMM.-ENGINEERING AND RESEARCH

GRAND ISLAND, NEBRASKA DECEMBER 5, 1988 SHEET 3 OF 4

628-705-2953

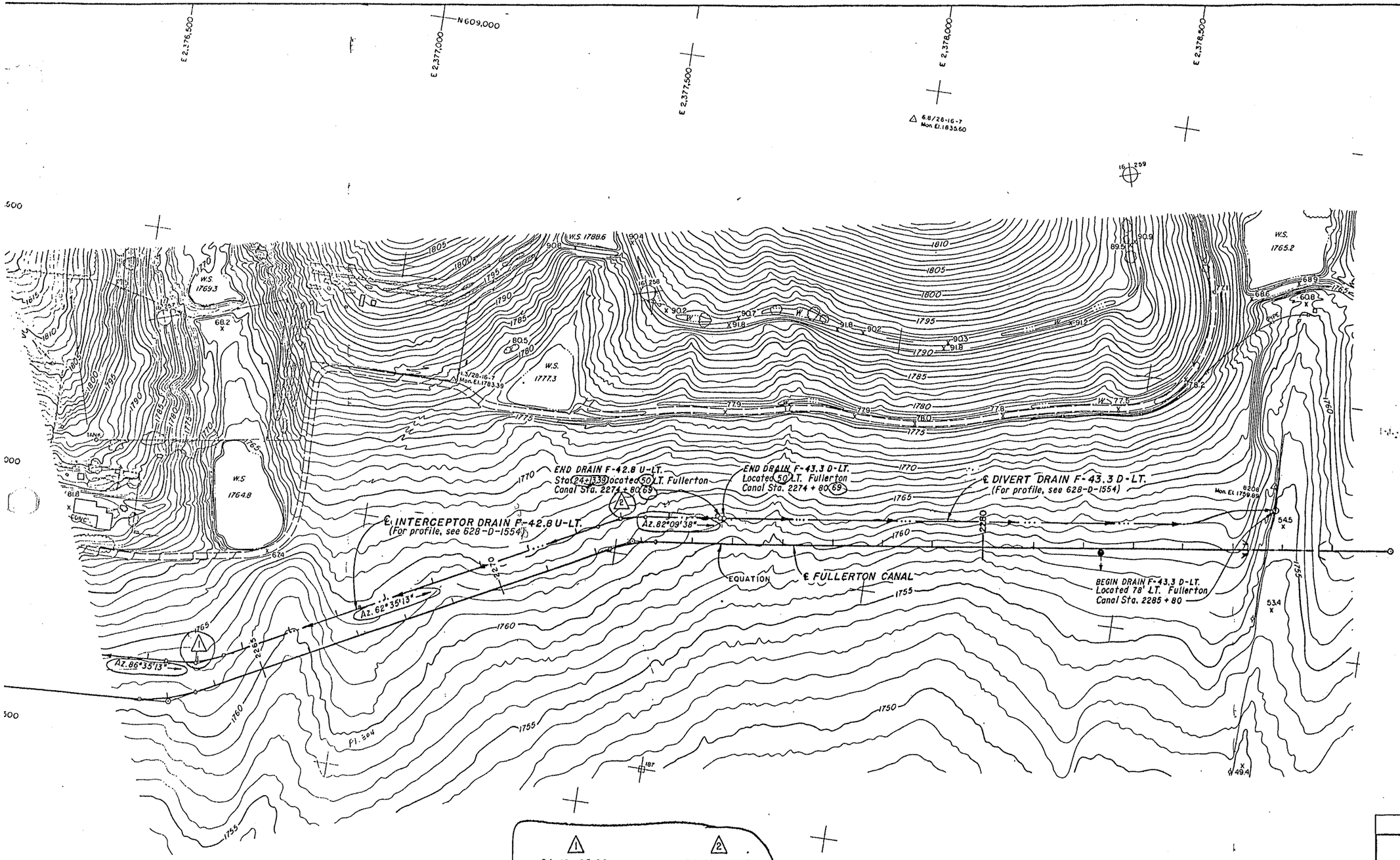

The data shown on this map sheet has been checked and found to be correct.
Final map prepared at 1" = 100'.
Date of Certification December 15, 1984

M.E. ERFLE P.E. & P.L.S. (# 7034)
Engineer in responsible charge.

COLORADO REGISTERED MELVIN EMIL ERFLE 7034 P.E. AND P.L.S.

NEBRASKA STATE PLANE COORDINATES SOUTH ZONE

100 0 100 200 300
SCALE OF FEET
U.S.C. & G.S. Datum

Delta Aerial Surveys, Inc.
2345 SOUTH FEDERAL BLVD., SUITE 195
DENVER, COLORADO 80219 (303) 934-8600

1	P.I. 12 + 95.00 P.C. 12 + 37.01 P.T. 13 + 51.29 Δ = 24°00'00" LT. D = 20°59'59.18" T = 57.99' L = 114.29' R = 272.84'
2	P.I. 21 + 92.67 P.C. 21 + 45.60 P.T. 22 + 38.81 Δ = 19°34'25" RT. D = 20°59'59.18" T = 47.06' L = 93.21' R = 272.84'

8-31-91 D-[illegible]	REVISED END STATION AND OFFSET ON INTERCEPTOR DRAIN F-42.8 U-LT. AND DIVERT DRAIN F-43.3 D-LT. ADDED CURVE DATA.
6-12-91 D-[illegible]	ADDED SIGNATURES. CHANGED DIVERT DRAIN F-42.8U-LT. TO INTERCEPTOR DRAIN F-42.8U-LT.
4-22-91 D-[illegible]	REALIGNED CANAL.

ALWAYS THINK SAFETY

UNITED STATES
DEPARTMENT OF THE INTERIOR
BUREAU OF RECLAMATION
PICK-SLOAN MISSOURI BASIN PROGRAM
NORTH LOUP DIVISION-NEBRASKA

FULLERTON CANAL-SECTIONS 2 AND 3

STRIP TOPOGRAPHY

STA. 2262 + 00 TO 2287 + 00

DESIGNED [illegible] FIELD APPROVAL [illegible]
DRAWN M.R.S. - G.L.S. TECHNICAL APPROVAL [illegible]
CHECKED [illegible] APPROVED [illegible]
CHIEF, WATER CONVEYANCE BRANCH

GRAND ISLAND, NEB. DEC. 20, 1990
SHEET 62 OF 69 SHEETS

628-705-2862

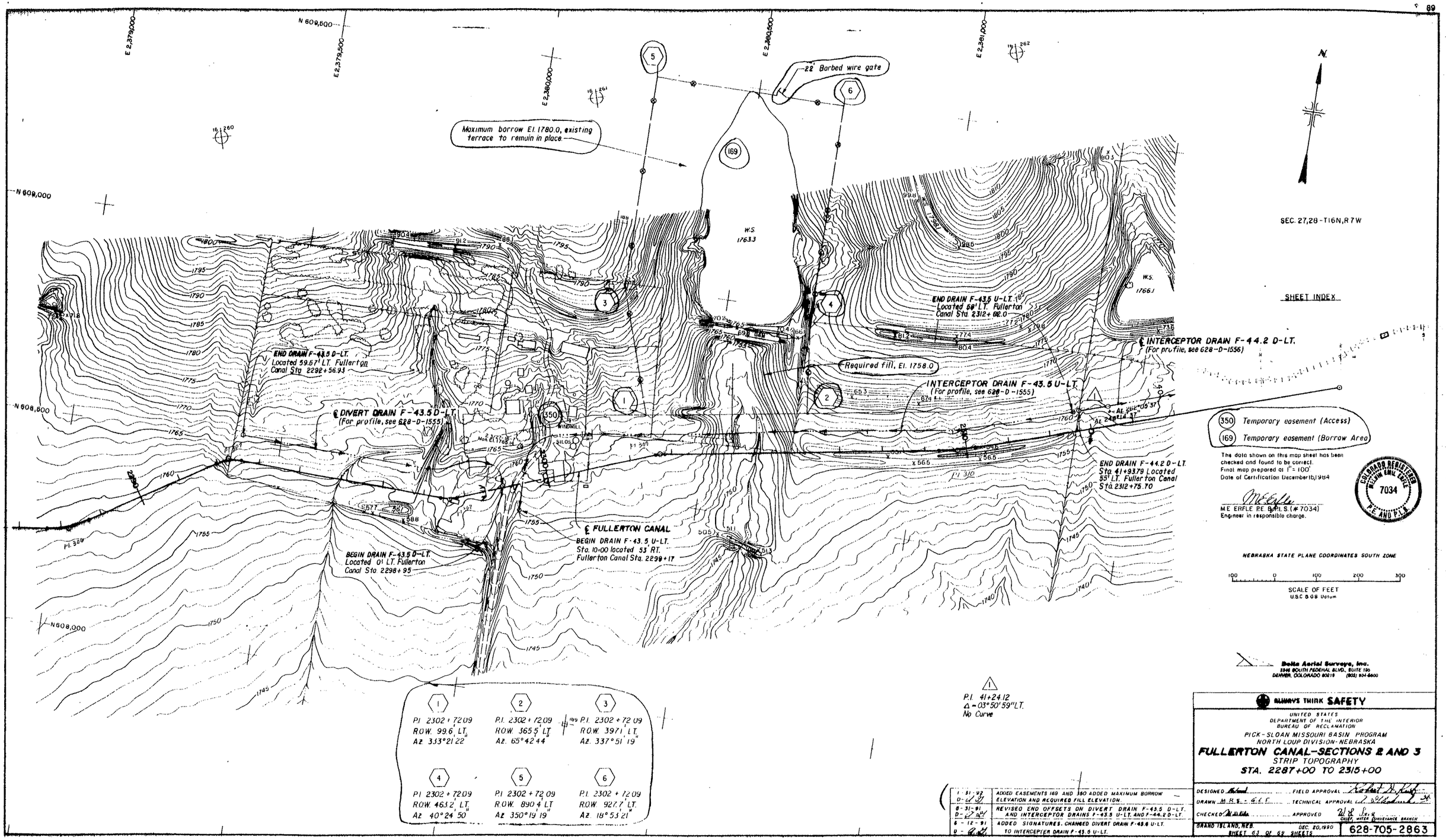

1-31-92 D-[illegible]	ADDED EASEMENTS 169 AND 350 ADDED MAXIMUM BORROW ELEVATION AND REQUIRED FILL ELEVATION.	
8-31-91 D-[illegible]	REVISED END OFFSETS ON DIVERT DRAIN F-43.5 D-LT. AND INTERCEPTOR DRAINS F-43.5 U-LT. AND F-44.2 D-LT.	
6-12-91 D-[illegible]	ADDED SIGNATURES. CHANGED DIVERT DRAIN F-43.6 U-LT. TO INTERCEPTER DRAIN F-43.5 U-LT.	

ALWAYS THINK SAFETY

UNITED STATES
DEPARTMENT OF THE INTERIOR
BUREAU OF RECLAMATION

PICK-SLOAN MISSOURI BASIN PROGRAM
NORTH LOUP DIVISION-NEBRASKA

FULLERTON CANAL-SECTIONS 2 AND 3

STRIP TOPOGRAPHY

STA. 2287+00 TO 2315+00

DESIGNED [illegible] FIELD APPROVAL [illegible]
DRAWN M.R.S.-G.L.F. TECHNICAL APPROVAL [illegible]
CHECKED [illegible] APPROVED [illegible] CHIEF, WATER CONVEYANCE BRANCH

GRAND ISLAND, NEB. DEC. 20, 1990 628-705-2863
SHEET 63 OF 69 SHEETS

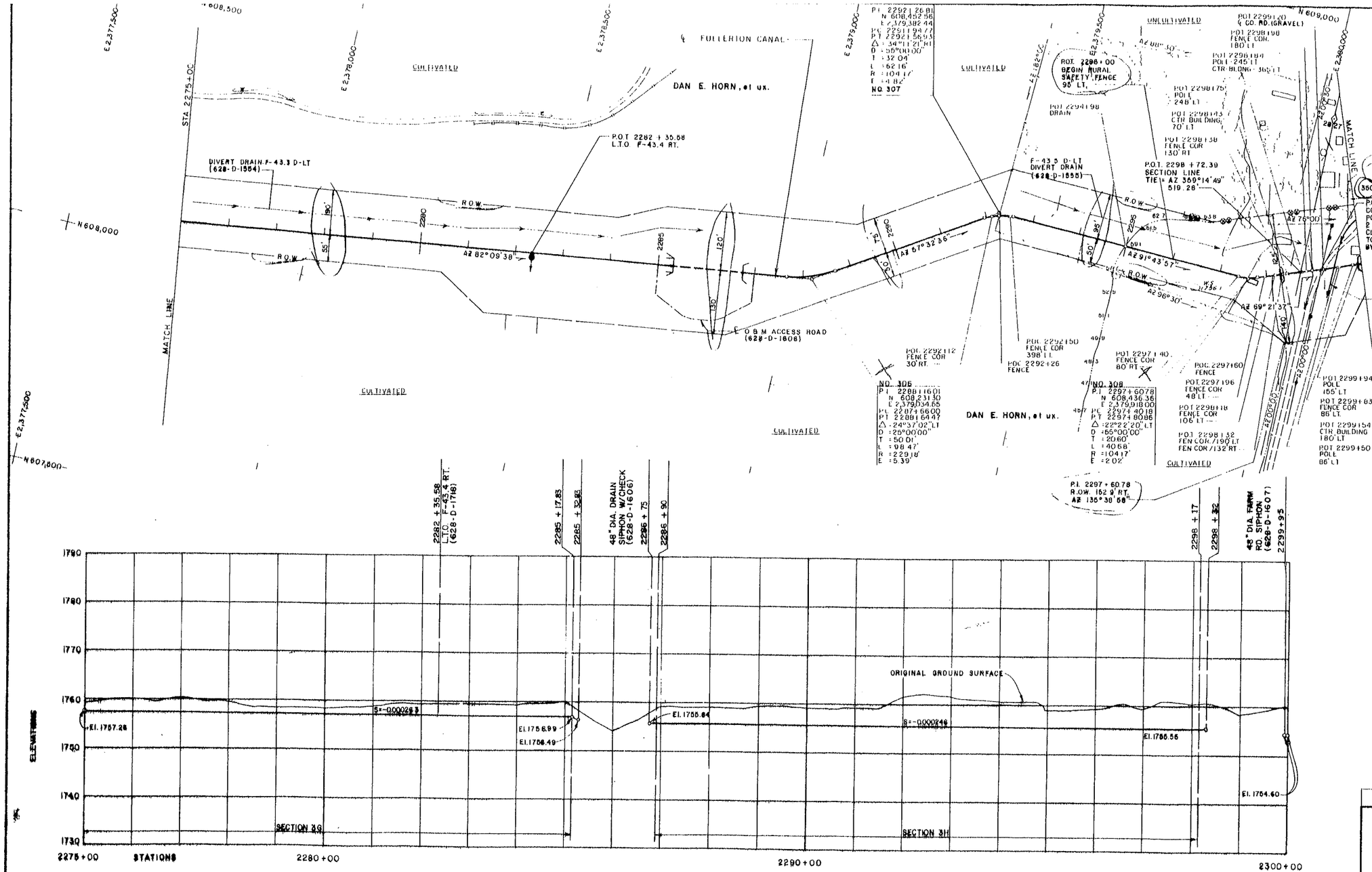

NOTES

FOR NOTES, SEE DWG. NO. 628-705-2870.

O & M ROAD ON RIGHT SIDE.

BUILDINGS WITHIN THE RIGHT-OF-WAY TO BE CLEARED SUBJECT TO REMOVAL BY OWNER.

NEBRASKA STATE PLANE COORDINATES SOUTH ZONE

SEC 28 - 116N, R7W

SCALE OF FEET
USC & GS Datum

Delta Aerial Surveys, Inc.
2340 SOUTH FEDERAL BLVD., SUITE 195
DENVER, COLORADO 80219 (303) 934-5500

HYDRAULIC PROPERTIES

SECTION	A	V	Q	r	n	s	b'	d	H	Wa	Wp	S.S.	b
3G	49.50	1.62	80	2.17	.025	0.000263	—	3.00	5.00	14.0	12.0	1.511	12.0
3H	45.42	1.54	70	2.14	.025	0.000243	—	3.10	5.00	14.0	12.0	1.511	10.0

ALWAYS THINK SAFETY

UNITED STATES
DEPARTMENT OF THE INTERIOR
BUREAU OF RECLAMATION

PICK-SLOAN MISSOURI BASIN PROGRAM
NORTH LOUP DIVISION-NEBRASKA

FULLERTON CANAL - SECTION 3

PLAN AND PROFILE

STA. 2275+00 to 2300+00

DESIGNED ..... FIELD APPROVAL .....
DRAWN M.A.S. ..... TECHNICAL APPROVAL .....
CHECKED ..... APPROVED .....
CHIEF, WATER CONVEYANCE BRANCH

GRAND ISLAND, NEB.
SHEET 62 OF 72 SHEETS

628-705-2934

ONE OVERLAY - INFORMATION

ADDED O & M ACCESS ROAD & INTERCEPTOR DRAIN F-43.5 U-LT.

ADDED FENCING AND R.O.W.

REVISED SIPHON INLET TO STA. 2298+32

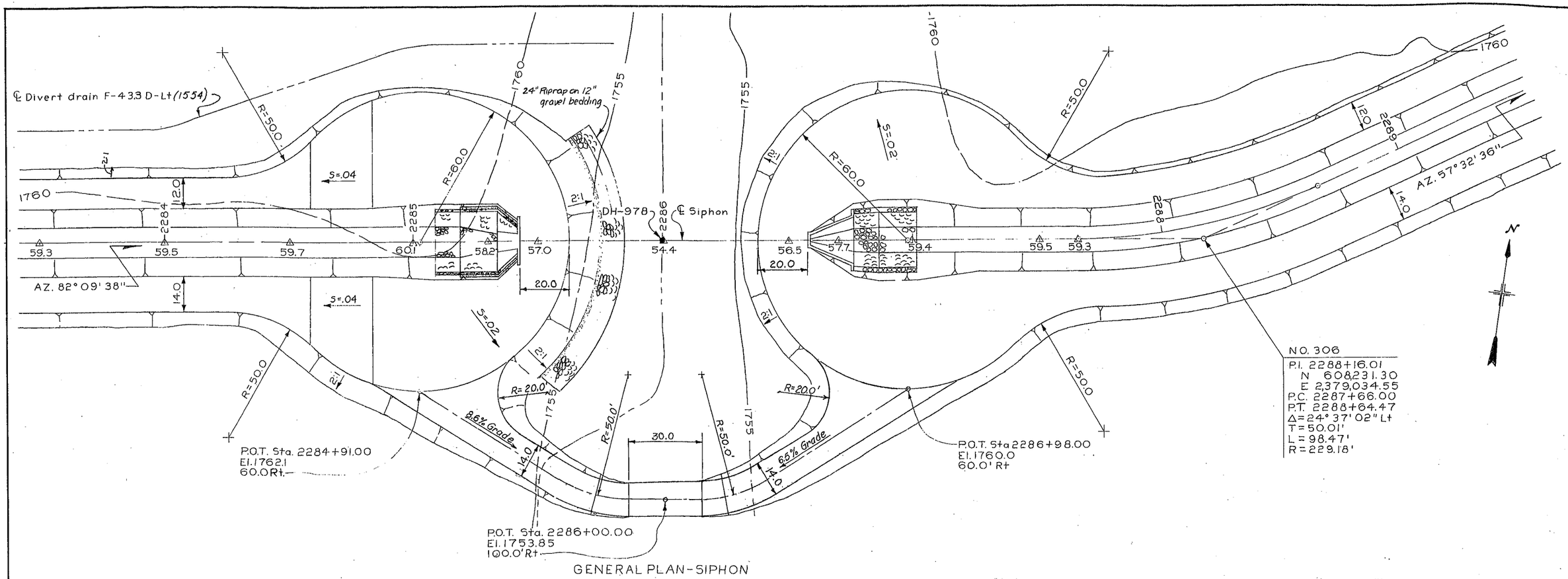

GENERAL PLAN-SIPHON

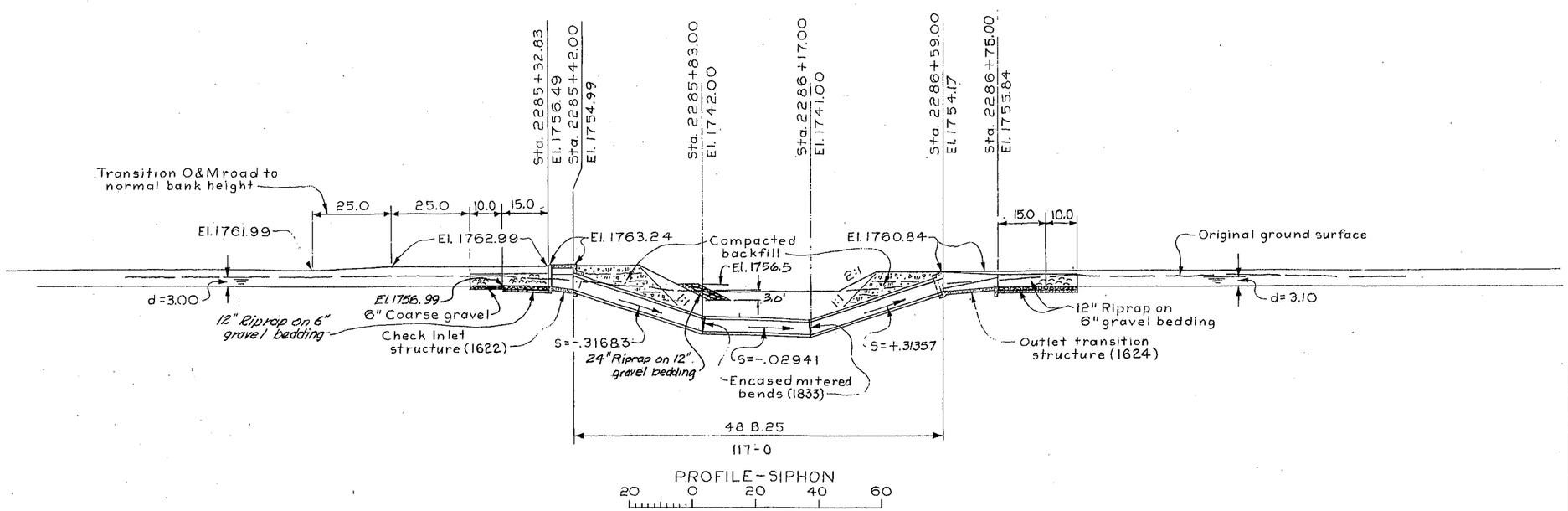

PROFILE-SIPHON

20 0 20 40 60

SCALE OF FEET

NOTES

For general notes, see 628-D-1512.
Design flow of siphon is 70 cfs
For details of safety cable and safety fence see 628-D-1731.

ALWAYS THINK SAFETY

UNITED STATES
DEPARTMENT OF THE INTERIOR
BUREAU OF RECLAMATION
PICK-SLOAN MISSOURI BASIN PROGRAM
NORTH LOUP DIVISION-NEBRASKA

FULLERTON CANAL-SECTIONS 2 AND 3
STA. 2285+32.83
48" DIA. SIPHON
GENERAL PLAN AND PROFILE

DESIGNED M. D. Francis TECHNICAL APPROVAL
DRAWN M. D. Francis SUBMITTED
CHECKED APPROVED
CHIEF, WATER CONVEYANCE BRANCH
DENVER, COLORADO AUGUST 13, 1990

628-D-1606

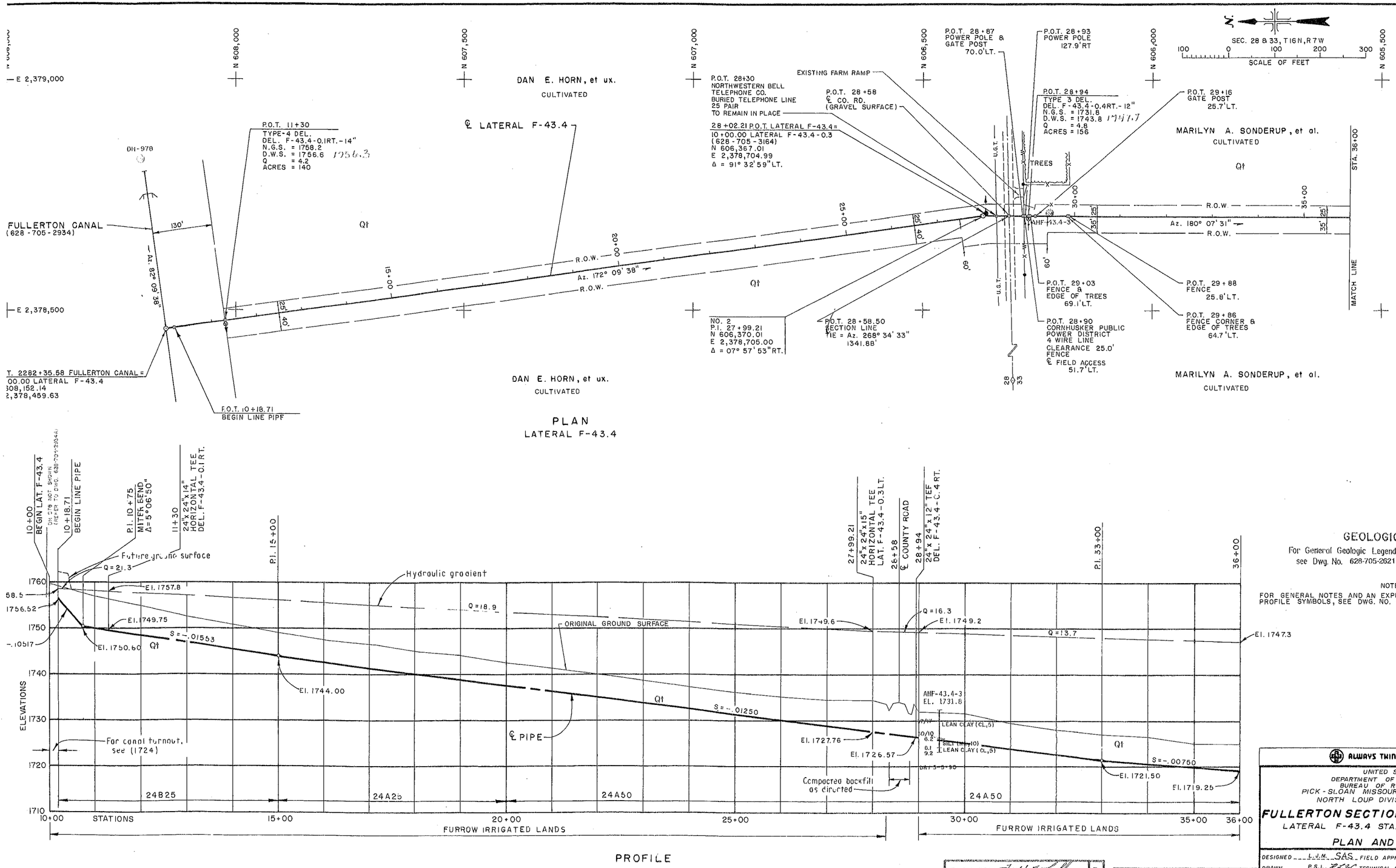

PLAN
LATERAL F-43.4

PROFILE

GEOLOGIC NOTE

For General Geologic Legend, Explanation and Notes, see Dwg. No. 628-705-2621A

NOTES

FOR GENERAL NOTES AND AN EXPLANATION OF THE PLAN AND PROFILE SYMBOLS, SEE DWG. NO. 628-705-3001.

ALWAYS THINK **SAFETY**

UNITED STATES
DEPARTMENT OF THE INTERIOR
BUREAU OF RECLAMATION
PICK-SLOAN MISSOURI BASIN PROGRAM
NORTH LOUP DIVISION-NEBRASKA

FULLERTON SECTION 3 PIPE LATERALS

LATERAL F-43.4 STA. 10+00 TO 36+00

PLAN AND PROFILE

DESIGNED L.V.M. SAS FIELD APPROVAL
DRAWN P.S.L. TECHNICAL APPROVAL
CHECKED P.S.L. JG APPROVED
CHIEF, WATER CONVEYANCE BRANCH

GRAND ISLAND, NEBRASKA OCTOBER 4, 1989
SHEET 1 OF 5

628-705-3160A

TECHNICAL APPROVAL
SUBMITTED
APPROVED
Chief, Geology Branch
GEOLOGY

TECH APPROVAL
SUBMITTED
APPROVED
GEOLOGY

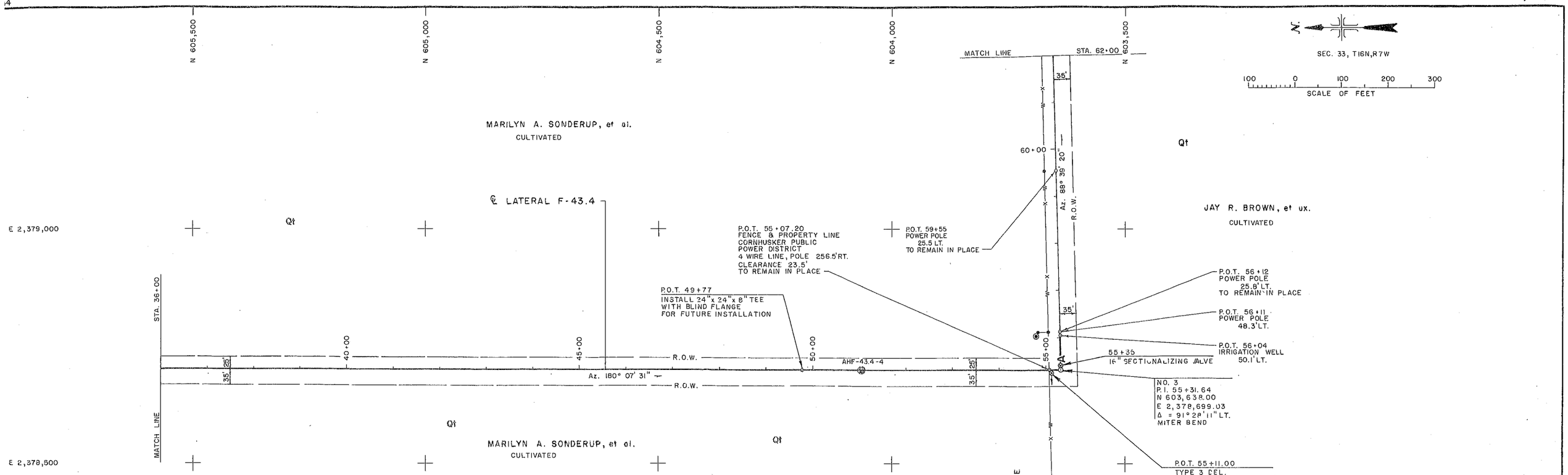

NOTES

FOR GENERAL NOTES AND AN EXPLANATION OF THE PLAN AND PROFILE SYMBOLS, SEE DWG. NO. 628-705-3001.

GEOLOGIC NOTE

For General Geologic Legend, Explanation and Notes, see Dwg. No. 628-705-2621A.

ALWAYS THINK SAFETY

UNITED STATES
DEPARTMENT OF THE INTERIOR
BUREAU OF RECLAMATION
PICK-SLOAN MISSOURI BASIN PROGRAM
NORTH LOUP DIVISION-NEBRASKA

FULLERTON SECTION 3 PIPE LATERALS

LATERAL F-43.4 STA. 36+00 TO 62+00

PLAN AND PROFILE

DESIGNED L.J.M. SAS FIELD APPROVAL
DRAWN P.S.L. TECHNICAL APPROVAL
CHECKED P.S.L. JB APPROVED
CHIEF, WATER CONVEYANCE BRANCH

GRAND ISLAND, NEBRASKA OCTOBER 4, 1989
SHEET 2 OF 5

628-705-3161A

TECHNICAL APPROVAL
SUBMITTED
APPROVED
Chief, Geology Branch
GEOLOGY

TECH APPROVAL
SUBMITTED
APPROVED

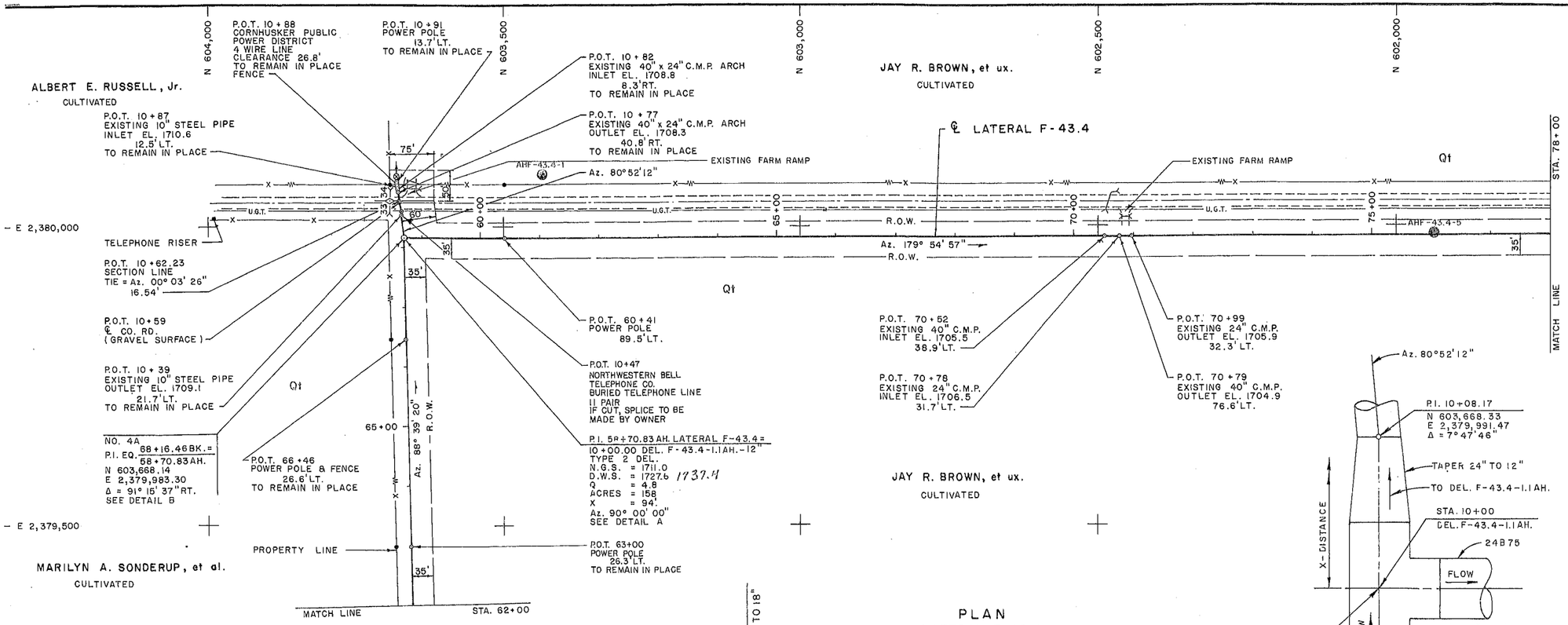

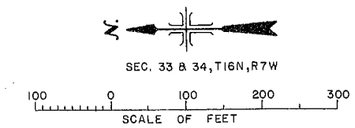

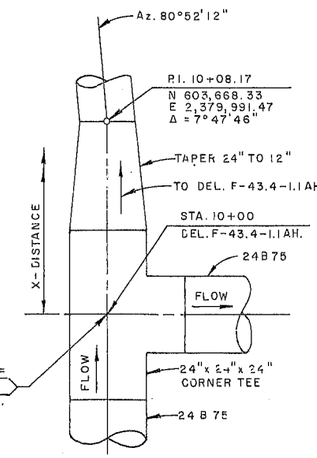

DETAIL B

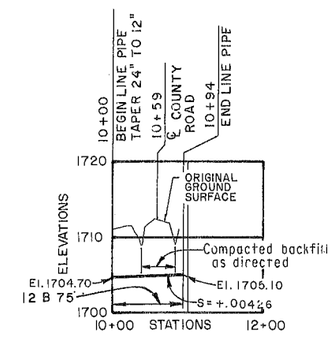

DEL. F-43.4-1.1 AH.

DETAIL A
GEOLOGIC NOTE

For General Geologic Legend, Explanation and Notes, see Dwg. No. 628-705-2621A.

NOTES

FOR GENERAL NOTES AND AN EXPLANATION OF THE PLAN AND PROFILE SYMBOLS, SEE DWG. NO. 628-705-3001.

PLAN
LATERAL F-43.4

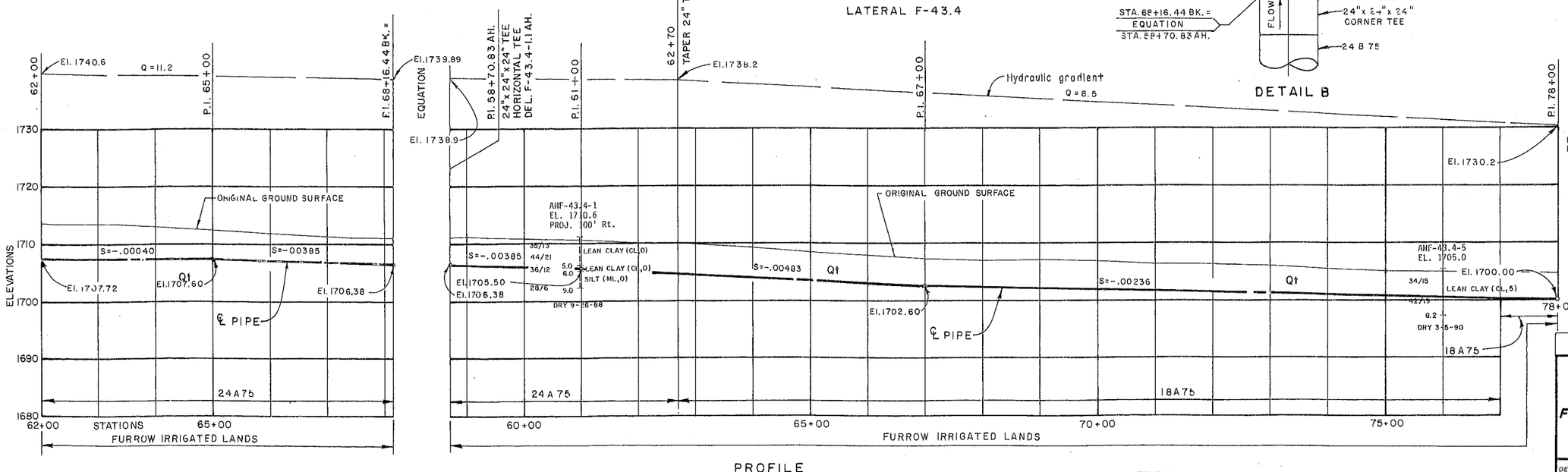

PROFILE

ALWAYS THINK SAFETY

UNITED STATES
DEPARTMENT OF THE INTERIOR
BUREAU OF RECLAMATION
PICK-SLOAN MISSOURI BASIN PROGRAM
NORTH LOUP DIVISION - NEBRASKA

FULLERTON SECTION 3 PIPE LATERALS

LATERAL F-43.4 STA. 62+00 TO 78+00

PLAN AND PROFILE

DESIGNED L.J.M. SAS FIELD APPROVAL
DRAWN P.S.L. TECHNICAL APPROVAL
CHECKED P.S.L. JS APPROVED
CHIEF, WATER CONVEYANCE BRANCH

GRAND ISLAND, NEBRASKA OCTOBER 4, 1989
SHEET 3 OF 5

628-705-3162A

TECHNICAL APPROVAL
SUBMITTED
APPROVED
For Chief, Geology Branch
GEOLOGY

TECH. APPROVAL
SUBMITTED
APPROVED

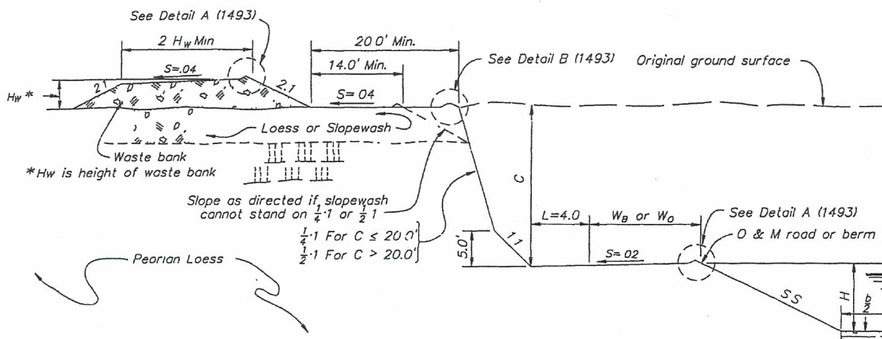

EXCAVATION IN PEORIAN LOESS

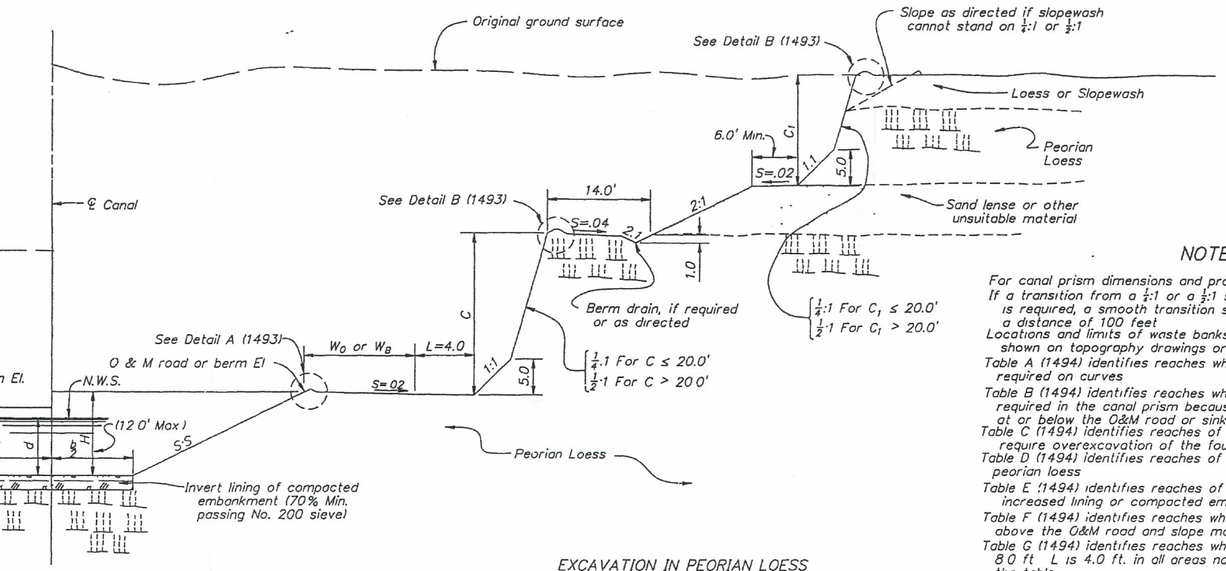

EXCAVATION IN PEORIAN LOESS
WITH SAND LENSE ABOVE O & M ROAD OR BERM

TYPICAL CANAL SECTION IN PEORIAN LOESS

(See Table D dwg. 628-D-1494)

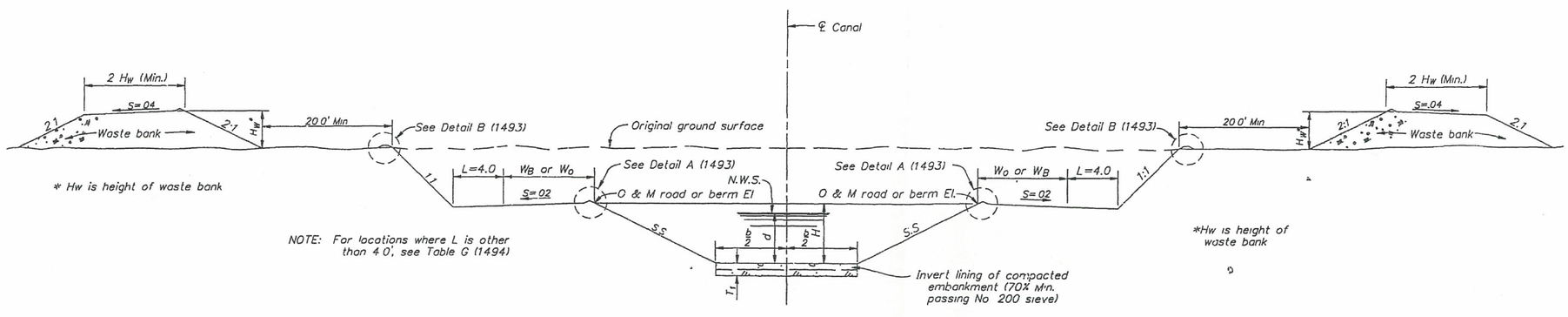

NOTE: For locations where L is other than 4.0', see Table G (1494)

TYPICAL CANAL SECTION

(EXCAVATION IN ALL AREAS OTHER THAN THOSE NOTED IN TABLES FOR PEORIAN LOESS AND SAND)

NOTES

For canal prism dimensions and properties, see 628-D-1494
If a transition from a $\frac{1}{4}$:1 or a $\frac{1}{2}$:1 slope to a 1:1 or 2:1 slope is required, a smooth transition shall be constructed over a distance of 100 feet
Locations and limits of waste banks and waste areas are shown on topography drawings or will be as directed
Table A (1494) identifies reaches where a gravel blanket is required on curves
Table B (1494) identifies reaches where full compacted lining is required in the canal prism because either sand is at or below the O&M road or sinkholes exist
Table C (1494) identifies reaches of canal embankment which require overexcavation of the foundation.
Table D (1494) identifies reaches of canal excavation in peorian loess
Table E (1494) identifies reaches of canal which require increased lining or compacted embankment freeboard
Table F (1494) identifies reaches where the sand formation is above the O&M road and slope modifications are required
Table G (1494) identifies reaches where dimension L is 8.0 ft L is 4.0 ft. in all areas not listed in the table
Table H (1494) identifies reaches where invert lining is not required.
Table J (1494) indentifies reaches of canal with embankment which is expected to be constructed of sandy material.
All limiting stations and elevations shown in Tables B, C, D, F, H, and J are approximate and may be adjusted as directed to meet actual field conditions Reaches not defined in the above tables may be discovered during construction, and the proper treatment shall be utilized where directed
For details of interceptor drains, divert drains and protective drains parallel to the canal, see 628-D-1495, -1496, and -1497
Reaches of low density material may exist along the canal alignment. If a culvert or siphon is located in the reach of low density material, the low density material must be overexcavated
If a siphon or culvert is not located in the reach of low density material either of the following two treatment methods will be used for the canal embankment:
1. Overexcavate the foundation Or
2 Overbuild the canal embankment 1.0'
Low density material is defined as any material having a dry unit weight of 85 lbs/ft^3 or less
Reaches of low density foundation material which are identified during construction, to be overexcavated, shall be overexcavated according to the following criteria:
1 Fill (Y) greater than 15 feet
Excavate low density material up to 10 feet deep
2 Fill (Y) less than 15 feet.
Excavate low density material up to 5 feet deep
When going into and out of overexcavation for low density areas, use a 6.1 ramp
For details of gravel blanketing at curves, see 628-D-1493.
W_O is 14.0 ft. and is O & M road width and W_B is 12.0 ft and is width of berm, unless otherwise noted on drawings.

4-16-91	DELETE "MODIFICATIONS OF" FROM 32nd AND 33rd
0-0-00	LINES OF NOTES.

ALWAYS THINK SAFETY

UNITED STATES
DEPARTMENT OF THE INTERIOR
BUREAU OF RECLAMATION

PICK-SLOAN MISSOURI BASIN PROGRAM
NORTH LOUP DIVISION-NEBRASKA

FULLERTON CANAL — SECTIONS 2 AND 3

TYPICAL CANAL SECTIONS

DESIGNED A. Glickman — TECHNICAL APPROVAL
DRAWN C. Kramer — SUBMITTED
CHECKED J. D. Starbuck — APPROVED
CHIEF, WATER CONVEYANCE BRANCH

DENVER, COLORADO — DECEMBER 20, 1990 — SHEET 1 OF 4

628-D-1491

D (22 X 34)

DGRAMER
CANTUZZA, 07/13
DGN 628-D-1491-27
CALMA PRISM/DGN and DN III

-This page intentionally left blank-

APPENDIX E

Record of Consultation

-This page intentionally left blank-

Record of Consultation: Indian Tribes and Nations

Indian Tribe or Nation	State	Letters	Telephone	Emails	Faxes	Meetings
Absentee-Shawnee Tribe of Indians of Oklahoma	OK	1/30/09; 3/30/09; 4/1/09; 4/22/09; 6/3/09; 6/18/09; 7/13/09; 9/8/09; 9/10/09; 9/28/09; 11/17/09; 11/18/09; 12/24/09; 12/31/09; 4/5/10; 6/9/10; 6/14/10; 7/23/10; 8/13/10; 11/24/10; 12/9/10; 1/16/11; 3/29/11; 6/30/11; 7/8/11; 9/21/12; 10/11/12	3/18/09, 6/22/11; 10/9/12; 10/16/12	5/4/09; 5/11/09; 6/25/09; 6/29/09; 7/1/09; 7/13/09; 8/4/09; 8/13/09; 8/21/09; 8/24/09; 9/1/09; 9/10/09; 9/14/09; 9/30/09; 10/7/09; 10/9/09; 10/12/09; 10/13/09; 10/19/09; 11/3/09; 11/4/09; 11/11/09; 11/17/09; 11/18/09; 11/20/09; 12/31/09; 3/31/10; 5/6/10; 6/2/10; 6/4/10; 6/21/10; 6/23/10; 7/6/10; 7/12/10; 7/16/10; 7/23/10; 8/10/10; 10/15/10; 10/21/10; 10/22/10; 11/3/10; 11/11/10; 11/24/10; 12/7/10; 12/8/10; 12/14/10; 1/12/11; 1/27/11; 1/28/11; 2/22/11; 3/18/11; 3/29/11; 4/18/11; 6/21/11; 6/30/11 (3); 7/1/11; 7/8/11; 7/20/11; 7/22/11		5/14/09; 7/28/09; 11/12/09
Alabama-Coushatta Tribes of Texas	TX	1/30/09; 2/20/09; 3/30/09; 4/22/09; 5/4/09; 6/3/09; 6/18/09; 7/9/09; 7/13/09; 9/8/09; 9/10/09; 9/14/09; 9/28/09; 11/17/09; 11/18/09; 12/24/09; 12/31/09; 3/23/10; 4/5/10; 6/9/10; 6/14/10; 7/20/10; 7/23/10; 8/13/10; 11/24/10; 12/9/10; 1/16/11; 3/29/11; 4/18/11; 6/30/11; 7/8/11; 9/21/12; 10/11/12	3/18/09; 7/1/09; 1/12/10; 5/4/10; 7/19/10; 11/19/10; 4/13/11; 5/4/11; 6/23/11 (2); 6/24/11; 6/27/11; 10/9/12; 10/16/12; 10/19/12	4/7/09; 5/4/09; 5/7/09; 6/25/09; 6/29/09; 7/1/09; 7/6/09;7/10/09; 7/13/09; 8/4/09; 8/13/09 (2); 8/24/09 (2); 9/1/09; 9/10/09; 9/15/09; 9/30/09; 10/5/09; 10/7/09; 10/9/09; 10/19/09; 11/3/09; 11/4/09; 11/10/09; 11/11/09; 11/17/09; 11/18/09; 11/20/09; 12/31/09; 1/15/10; 1/22/10; 2/19/10; 1/26/10; 2/23/10; 3/16/10; 3/22/10; 3/31/10; 5/4/10; 5/6/10; 5/15/10; 5/28/10; 6/2/10; 6/4/10; 6/21/10; 6/22/10; 6/23/10; 6/29/10; 7/6/10; 7/12/10; 7/16/10; 7/19/10; 7/20/10; 7/23/10; 8/10/10; 10/15/10; 10/21/10; 10/22/10; 11/3/10; 11/9/10; 11/11/10; 11/19/10; 11/24/10; 12/7/10; 12/8/10; 12/14/10; 1/12/11; 1/27/11; 1/28/11; 2/11/11; 2/22/11;3/18/11; 3/29/11; 4/18/11; 4/26/11; 4/28/11; 4/28/11; 5/4/11; 6/2/11; 6/6/11; 6/8/11; 6/21/11; 6/20/11; 6/24/11 (3); 6/30/11 (3); 7/1/11; 7/8/11; 7/12/11; 7/20/11; 7/22/11; 7/26/11 (4); 10/10/12	7/10/2009	7/28/09; 11/12/09; 7/24/10; 7/25/10; 12/7/10
Alabama-Quassarte Tribal Town, Oklahoma	OK	1/30/09; 3/30/09; 4/1/09; 9/21/12; 10/11/12	03/19/09			
Apache Tribe of Oklahoma	AZ	1/30/09; 3/30/09; 4/1/09; ; 9/21/12; 10/11/12	3/18/09; 10/9/12; 10/16/12			
Arapahoe Tribe of the Wind River Reservation, Wyoming (aka Northern Arapaho Tribe)	WY	1/30/09; 3/30/09; 4/1/09; 11/17/09; 11/18/09; 11/30/09; 12/24/09; 12/31/09; 1/10/10; 1/20/2010 1/27/10; 4/5/10; 6/9/10; 6/14/10; 7/23/10; 8/13/10; 11/24/10; 12/9/10; 1/16/11; 3/29/11; 6/30/11; 7/8/11; 9/21/12; 10/11/12	3/18/09; 10/7/09; 10/13/09; 10/14/09; 10/19/09; 11/10/09; 12/1/09; ; 12/15/09; 12/17/09; 3/15/10; 3/22/10; 6/10/10; 11/22/10; 10/9/12; 10/16/12	11/7/09; 11/25/09; 11/30/09; 12/1/09; 12/11/09; 12/15/09; 12/21/09; 12/22/09; 12/31/09; 1/19/10; 1/20/10; 1/21/10; 1/22/10; 1/26/10; 1/27/10; 2/2/10; 2/5/10; 2/8/10; 3/12/10; 3/18/10; 3/31/10; 5/5/10; 5/6/10; 6/2/10; 6/4/10; 6/15/10; 6/16/10; 6/21/10; 6/23/10; 7/6/10; 7/12/10; 7/16/10; 7/23/10; 8/10/10; 9/3/10; 10/1/10 ; 10/15/10; 10/21/10; 10/22/10; 11/2/10; 11/3/10; 11/11/10; 11/15/10; 11/24/10; 12/2/10; 12/7/10; 12/8/10; 12/14/10; 12/20/10; 12/22/10; 12/29/10; 1/12/11; 1/27/11; 1/28/11; 2/11/11; 2/16/11; 2/22/11; 3/18/11; 3/29/11; 4/18/11; 4/20/11; 4/26/11; 6/21/11; 6/30/11 (3); 7/1/11; 7/8/11; 7/20/11; 7/22/11; 8/1/11; 8/3/11 (2); 10/17/12 (2); 10/18/12; 10/20/12; 10/22/12	12/1/09	7/22/10; 7/23/10; 12/7/10
Assiniboine and Sioux Tribes of the Fort Peck Indian Reservation, Montana (aka Fort Peck Tribes)	MT	1/30/09; 3/30/09 4/22/09; 6/3/09; 6/18/09; 7/13/09; 9/8/09; 9/10/09; 9/28/09; 11/17/09; 11/18/09; 11/30/09; 12/24/09; 12/31/09; 4/5/10; 6/9/10; 6/14/10; 7/23/10; 8/13/10; 11/24/10; 12/9/10; 3/8/11; 3/29/11; 5/4/11; 6/30/11; 7/8/11; 9/21/12; 10/11/12	3/19/09; 5/7/09; 10/7/09; 10/13/09; 11/3/09; 11/4/09; 11/18/09; 11/30/09; 6/9/10; 6/30/10; 11/15/10; 11/18/10; 3/8/11; 7/13/11; 7/14/11; 10/9/12; 10/16/12	5/4/09; 3/20/09; 6/25/09; 6/29/09; 7/1/09; 7/13/09; 8/4/09; 8/12/09; 8/13/09; 9/1/09; 9/10/09; 9/30/09; 10/7/09; 10/9/09; 10/19/09; 11/3/09; 11/4/09; 11/11/09; 11/17/09; 11/18/09; 11/20/09; 12/31/09; 3/31/10; 5/6/10; 6/2/10; 6/4/10; 6/16/10; 6/18/10; 6/21/10; 6/23/10; 7/6/10; 7/12/10; 7/16/10; 7/23/10; 8/10/10; 10/15/10; 10/21/10; 10/22/10; 11/3/10; 11/11/10; 11/24/10; 12/7/10; 12/8/10; 12/14/10; 1/12/11; 1/27/11; 1/28/11; 2/22/11; 3/18/11; 3/29/11; 4/18/11; 4/25/11 (2); 5/3/11; 6/21/11; 6/30/11 (3); 7/1/11; 7/8/11; 7/20/11; 7/22/11; 10/12/12; 10/17/12 (2); 11/2/12; 11/8/12		7/14/09; 7/22/10; 7/23/10; 12/7/10; 10/26/12

Record of Consultation: Indian Tribes and Nations

Indian Tribe or Nation	State	Letters	Telephone	Emails	Faxes	Meetings
Blackfeet Tribe of the Blackfeet Indian Reservation of Montana	MT	1/30/09; 2/19/09; 3/30/09; 4/1/09; 4/15/09; 4/22/09; 6/3/09; 6/18/09; 7/13/09; 9/8/09; 9/10/09; 9/14/09; 9/28/09; 11/17/09; 11/18/09; 12/15/09; 12/21/09; 12/24/09; 12/31/09; 1/25/10; 4/5/10; 6/9/10; 6/14/10; 7/23/10; 8/13/10; 11/24/10; 12/9/10; 3/8/11; 3/29/11; 5/4/11; 6/30/11; 7/8/11; 9/21/12; 10/11/12	8/18/09; 8/21/09; 9/8/09; 9/9/09; 10/12/09; 10/14/09; 10/16/09; 10/20/09; 10/21/09; 10/26/09; 11/9/09; 11/10/09; 11/11/09; 6/10/10; 7/13/10; 11/17/10; 4/26/11; 5/17/11; 6/7/11; 6/23/11; 8/1/11; 10/9/12; 10/10/12; 10/16/12	3/4/09; 5/4/09; 6/25/09; 6/29/09; 7/1/09; 7/13/09; 8/4/09; 8/13/09; 8/21/09 (3); 8/24/09 (3); 8/25/09; 8/26/09; 8/31/09 (2); 9/1/09; 9/3/09; 9/8/09; 9/9/09; 9/10/09; 9/15/09; 9/30/09 (2); 10/7/09; 10/9/09; 10/12/09 (2); 10/14/09; 10/19/09; 10/21/09; 11/2/09 11/3/09; 11/4/09; 11/7/09; 11/9/09; 11/11/09; 11/12/09; 11/17/09; 11/18/09; 11/20/09; 12/11/09 12/15/09; 12/16/09; 12/17/09; 12/31/09; 1/4/10; 1/6/10; 1/14/10; 1/19/10; 1/21/10; 1/25/10; 3/31/10; 5/6/10; 6/2/10; 6/4/10; 6/11/10; 6/16/10; 6/18/10; 6/21/10; 6/22/10; 6/23/10; 7/6/10; 7/12/10; 7/13/10; 7/16/10; 7/23/10; 8/10/10; 10/15/10; 10/21/10; 10/22/10; 11/3/10; 11/11/10; 11/15/10; 11/24/10; 11/28/10; 12/2/10; 12/7/10; 12/8/10; 12/14/10; 1/12/11; 1/27/11; 1/28/11; 2/11/11; 2/22/11; 3/18/11; 3/29/11; 4/18/11; 4/25/11; 4/26/11 (2); 5/3/11; 6/2/11 (2); 6/3/11 (4); 6/17/11; 6/19/11; 6/20/11 (2); 6/21/11; 6/22/11 (4); 6/27/11; 6/29/11; 6/30/11 (3); 7/1/11; 7/8/11; 7/20/11; 7/22/11; 8/1/11; 10/9/12; 10/16/12 (2); 11/2/12; 11/8/12		10/20/09; 10/22/09; 7/22/10; 7/23/10; 12/7/10; 10/22/12
Cherokee Nation, Oklahoma	OK	1/30/09; 3/30/09; 9/21/12; 10/11/12	3/18/09; 10/9/12; 10/16/12	5/4/09; 6/25/09; 6/29/09; 7/1/09; 7/13/09; 8/4/09; 8/13/09; 9/1/09; 9/10/09; 9/30/09; 10/7/09; 10/9/09; 10/19/09; 11/3/09; 11/4/09; 11/11/09; 11/17/09; 11/18/09; 11/20/09; 12/31/09; 3/31/10; 5/6/10; 6/2/10; 6/4/10; 6/21/10; 6/23/10; 7/6/10; 7/12/10; 7/16/10; 7/23/10; 8/10/10; 10/15/10; 10/21/10; 10/22/10; 11/3/10; 11/11/10; 11/24/10; 12/7/10; 12/8/10; 12/14/10; 1/12/11; 1/27/11; 1/28/11; 2/22/11; 3/18/11; 3/29/11; 4/18/11; 6/21/11; 6/30/11 (3); 7/1/11; 7/8/11; 7/20/11; 7/22/11; 10/9/12		
Cheyenne and Arapaho Tribes, Oklahoma	OK	1/30/09; 3/30/09; 4/1/09; 4/22/09; 5/7/09; 5/22/09 ; 6/3/09; 6/18/09; 7/13/09; 9/8/09; 9/10/09; 9/28/09; 11/17/09; 11/18/09; 12/24/09; 12/31/09; 3/16/10; 4/5/10; 6/9/10; 6/14/10; 7/23/10; 8/13/10; 11/24/10; 12/9/10; 1/16/11; 3/29/11; 6/30/11; 7/8/11; 9/21/12; 10/11/12	3/18/09; 11/9/09; 11/13/09; 1/14/10; 5/4/10; 10/9/12; 10/16/12	5/4/09; 5/7/09; 5/22/09; 6/25/09; 6/29/09; 6/30/09; 7/1/09; 7/13/09; 8/4/09; 8/13/09; 8/14/09 (3); 9/1/09; 9/10/09; 9/15/09; 9/30/09; 10/7/09; 10/9/09; 10/19/09; 11/3/09; 11/4/09; 11/11/09; 11/12/09; 11/17/09; 11/18/09; 11/20/09; 12/31/09; 1/14/10; 1/30/10; 2/26/10; 3/1/10; 3/31/10; 5/6/10; 6/2/10; 6/4/10; 6/21/10; 6/23/10; 7/6/10; 7/12/10; 7/16/10; 7/19/10; 7/20/10; 7/23/10; 8/10/10; 8/11/10; 10/15/10; 10/21/10; 10/22/10; 11/3/10; 11/11/10; 11/24/10; 12/7/10; 12/8/10; 12/14/10; 1/12/11; 1/27/11; 1/28/11; 2/11/11; 2/22/11; 3/18/11; 3/29/11; 4/18/11; 6/21/11; 6/30/11 (3); 7/1/11; 7/8/11; 7/20/11 (3); 7/22/11		5/14/2009
Cheyenne River Sioux Tribe of the Cheyenne River Reservation, South Dakota	SD	1/30/09; 3/30/09; 4/1/09; ; 4/22/09; 6/3/09; 6/18/09; 7/13/09; 7/21/09; 9/8/09; 9/10/09; 9/14/20009; 9/28/09; 11/17/09; 11/18/09; 12/24/09; 12/31/09; 4/5/10; 6/9/10; 6/14/10; 7/23/10; 8/13/10; 11/24/10; 12/9/10; 1/16/11; 3/29/11; 4/14/11; 4/18/11; 6/22/11; 6/30/11; 7/8/11; 9/21/12; 10/11/12	3/18/09; 10/13/09; 4/25/11; 4/29/11; 10/9/12; 10/16/12	5/4/09; 5/1/09; 5/26/09; 6/15/09; 6/22/09; 6/25/09; 6/29/09; 7/1/09; 7/6/09; 7/9/09; 7/13/09; 8/4/09; 8/13/09; 8/27/09; 8/28/09; 9/1/09; 9/2/09; 9/10/09; 9/14/09; 9/30/09; 10/7/09; 10/9/09; 10/13/09; 10/19/09; 11/3/09; 11/4/09; 11/11/09; 11/17/09; 11/18/09; 11/19/09; 11/20/09; 12/31/09; 3/31/10; 5/6/10; 6/2/10; 6/4/10; 6/21/10; 6/23/10; 7/6/10; 7/12/10; 7/16/10; 7/23/10; 8/10/10; 10/15/10; 10/21/10; 10/22/10; 11/3/10; 11/11/10; 11/24/10; 12/7/10; 12/8/10; 12/14/10; 1/12/11; 1/27/11; 1/28/11; 2/22/11; 3/18/11; 3/29/11; 4/11/11; 4/14/11; 4/15/1 (2); 4/18/11 (2); 4/19/11; 4/25/11 (3); 4/26/11 (2); 4/27/11; 6/6/11; 6/21/11; 6/22/11 (2); 6/30/11 (3); 7/22/11; 7/27/11; 10/16/12 (2); 10/17/12 (2); 10/23/12; 11/2/12; 11/8/12		5/12/09; 7/14/09; 10/20/09; 10/24/12
Chickasaw Nation, Oklahoma	OK	1/26/10; 1/30/09; 3/30/09; 4/1/09; 1/26/10; 9/21/12; 10/11/12; 10/31/12	3/18/09; 3/20/09; 4/1/09; 10/9/12; 10/16/12	1/20/10; 1/26/10		

Record of Consultation: Indian Tribes and Nations

Indian Tribe or Nation	State	Letters	Telephone	Emails	Faxes	Meetings
Chippewa-Cree Indians of the Rocky Boy's Reservation, Montana	MT	1/30/09; 3/30/09; 4/1/09 ; 4/22/09; 6/3/09; 6/18/09; 7/13/09; 9/8/09; 9/10/09; 9/28/09; 11/17/09; 11/18/09; 12/24/09; 12/31/09; 1/27/10; 4/5/10; 6/9/10; 6/14/10; 7/23/10; 8/13/10; 11/24/10; 12/9/10; 3/8/11; 3/29/11; 5/4/11; 5/16/11; 6/30/11; 7/8/11; 9/21/12; 10/11/12	3/19/09; 10/13/09; 10/21/09; 1/27/10; 6/8/10; 11/22/10; 12/3/10; 6/7/11; 6/23/11; 6/24/11; 6/27/11; 10/9/12; 10/16/12	5/4/09; 6/25/09; 6/29/09; 7/1/09; 7/13/09; 8/4/09; 8/13/09; 9/1/09; 9/10/09; 9/30/09; 10/7/09; 10/9/09; 10/19/09; 10/26/09; 11/3/09; 11/4/09; 11/11/09; 11/17/09; 11/18/09; 11/20/09; 12/31/09; 1/27/10; 3/31/10; 5/6/10; 6/2/10; 6/4/10; 6/18/10; 6/21/10; 6/23/10; 7/6/10; 7/12/10; 7/16/10; 7/19/10; 7/23/10; 8/10/10; 10/15/10; 10/21/10; 10/22/10; 11/3/10; 11/11/10; 11/24/10; 12/7/10; 12/8/10; 12/14/10; 1/12/11; 1/27/11; 1/28/11; 2/22/11; 3/18/11; 3/29/11; 4/18/11; 5/3/11; 5/16/11; 5/20/11 (2); 6/2/11 (6); 6/3/11 (3); 6/17/11; 6/20/11 (3); 6/21/11; 6/23/11 (2); 6/24/11 (3); 6/27/11; 6/28/11 (2); 6/29/11; 6/30/11 (3); 7/1/11; 7/8/11 (3); 7/12/11(2); 7/20/11; 7/22/11; 10/19/12; 10/20/12 (2); 11/2/12; 11/8/12 (2); 12/5/12		10/20/09; 10/22/09; 7/22/10; 7/23/10; 12/7/10; 10/22/12
Choctaw Nation of Oklahoma	OK	1/30/09; 3/30/09; 4/1/09; 4/10/09; 4/20/09; 4/22/09; 4/24/09; 5/13/09; 6/3/09; 6/18/09; 7/13/09; 9/8/09; 9/9/09; 9/10/09; 9/17/09; 9/28/09; 11/17/09; 11/18/09; 12/2/09; 12/24/09; 12/31/09 ; 4/5/10; 6/9/10; 6/14/10; 7/23/10; 8/13/10; 11/24/10; 12/9/10; 1/16/11; 3/29/11; 6/30/11; 7/8/11; 9/21/12; 10/11/12	3/18/09; 4/14/09; 5/22/09; 9/10/09; 9/15/09; 10/20/10; 10/23/10; 7/25/11; 10/10/12; 10/16/12	5/4/09; 6/25/09; 6/29/09 (2); 7/1/09; 7/13/09; 8/4/09; 8/13/09; 9/1/09; 9/10/09; 9/14/09; 9/30/09; 10/7/09; 10/9/09 (3); 10/19/09;11/3/09; 11/4/09; 11/11/09; 11/17/09; 11/18/09; 11/20/09; 12/31/09; 3/30/10; 3/31/10; 4/5/10; 5/7/10 6/2/10; 6/4/10; 6/21/10; 6/23/10; 7/6/10; 7/7/10; 7/12/10; 7/16/10; 7/23/10; 8/10/10; 10/15/10; 10/21/10; 10/22/10; 10/27/10; 11/3/10; 11/9/10; 11/11/10; 11/24/10; 12/3/10; 12/7/10; 12/8/10; 12/14/10; 1/12/11; 1/27/11; 1/28/11; 2/22/11; 3/18/11; 3/29/11; 4/18/11; 6/21/11; 6/30/11 (3); 7/1/11; 7/8/11; 7/20/11; 7/22/11; 7/25/11 (5); 10/10/12; 10/14/12; 10/17/12 (2); 10/18/12 (2)		11/12/09; 7/24/10; 7/25/10; 12/7/10
Comanche Nation, Oklahoma	OK	1/30/2009; 9/21/12; 10/11/12	3/18/09; 10/10/12	3/19/2009		
Confederated Salish & Kootenai Tribes of the Flathead Indian Nation, Montana	MT	1/30/09; 3/30/09; 4/1/09; 9/21/12; 10/11/12	3/19/09; 10/10/12; 10/16/12; 10/17/12	10/17/2012		
Crow Creek Sioux Tribe of the Crow Creek Reservation, South Dakota	SD	1/30/09; 2/19/09; 3/30/09; 4/1/09; 9/21/12; 10/11/12	3/23/09; 6/24/11; 10/10/12; 10/16/12	10/17/12 (2); 11/2/12; 11/8/12		10/24/2012
Crow Tribe of Montana	MT	1/30/09; 2/19/09 3/30/09; 4/1/09; 4/7/09; 4/19/09 4/22/09; 6/3/09; 6/18/09; 7/13/09; 9/8/09; 9/10/09; 9/28/09; 11/17/09; 11/18/09; 12/24/09; 12/31/09; 4/5/10; 6/9/10; 6/14/10; 7/23/10; 8/13/10; 11/24/10; 12/9/10; 1/16/11; 3/29/11; 6/30/11; 7/8/11; 9/21/12; 10/11/12	3/19/09; 9/16/09; 10/13/09; 3/26/10; 6/24/11; 10/10/12; 10/16/12; 10/17/12	5/4/09; 6/25/09; 6/29/09; 7/1/09; 7/13/09; 8/4/09; 8/13/09; 9/1/09; 9/10/09; 9/14/09; 9/30/09; 10/7/09; 10/9/09; 10/19/09; 11/3/09; 11/4/09; 11/11/09; 11/17/09; 11/18/09; 11/20/09; 12/31/09; 3/10/10; 3/26/10; 3/31/10; 5/6/10; 6/2/10; 6/4/10; 6/21/10; 6/23/10; 7/6/10; 7/12/10; 7/16/10; 7/23/10; 8/10/10; 10/15/10; 10/21/10; 10/22/10; 11/3/10; 11/11/10; 11/24/10; 12/7/10; 12/8/10; 12/14/10; 1/12/11; 1/27/11; 1/28/11; 2/22/11; 3/18/11; 3/29/11; 4/18/11; 6/21/11; 6/30/11 (3); 7/1/11; 7/8/11; 7/20/11; 7/22/11; 10/19/12; 11/2/12; 11/8/12		10/22/2012
Delaware Tribe of Indians, Oklahoma	OK	1/30/09; 3/30/09; 4/1/09; 4/7/09; 4/17/09 4/22/09; 6/3/09; 6/18/09; 7/13/09; 9/8/09; 9/10/09; 9/28/09; 11/17/09; 11/18/09; 12/24/09; 12/31/09; 4/5/10; 6/9/10; 6/14/10; 7/23/10; 8/13/10; 11/24/10; 12/9/10; 1/16/11; 3/29/11; 6/30/11; 7/8/11; 9/21/12; 10/11/12	3/18/09; 10/10/12; 10/16/12	5/4/09; 4/29/09; 6/25/09; 6/29/09; 7/1/09; 7/13/09; 8/4/09; 8/13/09; 9/1/09; 9/10/09; 9/30/09; 10/7/09; 10/9/09; 10/19/09; 11/3/09; 11/4/09; 11/11/09; 11/17/09; 11/18/09; 11/20/09; 12/31/09; 3/31/10; 5/6/10; 6/2/10; 6/4/10; 6/21/10; 6/23/10; 7/6/10; 7/12/10; 7/16/10; 7/23/10; 8/10/10; 10/15/10; 10/21/10; 10/22/10; 11/3/10; 11/11/10; 11/24/10; 12/7/10; 12/8/10; 12/14/10; 1/12/11; 1/27/11; 1/28/11; 2/22/11; 3/18/11; 3/29/11; 4/18/11; 6/21/11; 6/30/11 (3); 7/1/11; 7/8/11; 7/20/11; 7/22/11; 10/19/20; 10/20/12		5/14/09; 7/28/09
Eastern Band of Cherokee Indians of North Carolina	NC	1/30/09; 3/30/09; 4/1/09; 9/21/12; 10/11/12	3/19/09; 10/10/12; 10/16/12			
Eastern Shawnee Tribe of Oklahoma	OK	1/30/09; 3/30/09; 4/1/09; 9/21/12; 10/11/12	3/18/09; 10/10/12; 10/16/12			
Flandreau Santee Sioux Tribe of South Dakota	SD	1/30/09; 3/30/09; 4/1/09; 9/21/12; 10/11/12	3/23/09; 10/10/12; 10/16/12			
Forest County Potawatomi Community, Wisconsin	WI	1/30/09; 3/30/09; 4/1/09; 9/21/12; 10/11/12; 10/30/12	3/19/09; 10/10/12; 10/17/12	10/19/12		

Record of Consultation: Indian Tribes and Nations

Indian Tribe or Nation	State	Letters	Telephone	Emails	Faxes	Meetings
Fort Belknap Indian Community of the Fort Belknap Reservation of Montana (aka Gros Ventre and Assiniboine Tribe of Ft. Belknap)	MT	1/30/09; 3/30/09; 4/1/09; 4/14/09; 4/22/09; 6/3/09; 6/18/09; 7/13/09; 9/8/09; 9/10/09; 9/28/09; 11/17/09; 11/18/09; 12/24/09; 12/31/09; 4/5/10; 6/9/10; 6/14/10; 7/23/10; 8/13/10; 10/15/10; 11/24/10; 12/9/10; 3/8/11; 3/29/11; 6/30/11; 7/8/11; 9/21/12; 10/11/12	3/18/09; 9/16/09; 10/13/09; 10/16/09; 10/19/09; 10/22/09; 6/28/11; 10/10/12; 10/17/12	5/4/09; 6/25/09; 6/29/09; 7/1/09; 7/13/09; 8/4/09; 8/12/09; 8/13/09; 9/1/09; 9/10/09; 9/30/09; 10/7/09; 10/9/09; 10/14/09; 10/19/09; 11/3/09; 11/4/09; 11/11/09; 11/17/09; 11/18/09; 11/20/09; 12/31/09; 3/31/10; 5/6/10; 6/2/10; 6/4/10; 6/21/10; 6/23/10; 7/6/10; 7/12/10; 7/16/10; 7/23/10; 8/10/10; ; 10/15/10; 10/21/10; 10/22/10; 11/3/10; 11/11/10; 11/24/10; 12/7/10; 12/8/10; 12/14/10; 1/12/11; 1/27/11; 1/28/11; 2/22/11; 3/18/11; 3/29/11; 4/18/11; 5/3/11; 6/21/11; 6/30/11 (3); 7/1/11; 7/8/11; 7/20/11; 7/22/11;		10/20/2009
Hannahville Indian Community, Michigan	MI	1/30/09; 3/30/09; 4/1/09; 9/21/12; 10/11/12	3/19/09; 10/17/12			
Ho-Chunk Nation of Wisconsin	WI	1/30/09; 3/30/09; 4/1/09; 4/8/09 5/10/09 4/22/09; 6/3/09; 6/18/09; 7/13/09; 9/8/09; 9/10/09; 9/28/09; 11/17/09; 11/18/09; 12/24/09; 12/31/09; 4/5/10; 6/9/10; 6/14/10; 7/23/10; 8/13/10; 11/24/10; 12/9/10; 1/16/11; 3/29/11; 6/30/11; 7/8/11; 9/21/12; 10/11/12	3/19/09; 7/18/11	5/4/09; 6/25/09; 6/29/09; 7/1/09; 7/13/09; 8/4/09; 8/13/09; 9/1/09; 9/10/09; 9/30/09; 10/7/09; 10/9/09; 10/19/09; 11/3/09; 11/4/09; 11/11/09; 11/17/09; 11/18/09; 11/20/09; 12/31/09; 1/2/10; 3/31/10; 5/6/10; 6/2/10; 6/4/10; 6/21/10; 6/23/10; 7/6/10; 7/12/10; 7/16/10; 7/23/10; 8/10/10; 10/15/10; 10/21/10; 10/22/10; 11/3/10; 11/11/10; 11/24/10; 12/7/10; 12/8/10; 12/14/10; 1/12/11; 1/27/11; 1/28/11; 2/22/11; 3/18/11; 3/29/11; 4/18/11; 6/21/11; 6/30/11 (3); 7/1/11; 7/8/11; 7/20/11; 7/18/11 (6); 7/22/11; 9/26/12; 9/28/12 (2)		
Iowa Tribe of Kansas and Nebraska	KS; NE	1/30/09; 3/30/09; 4/1/09 4/22/09; 6/3/09; 6/18/09; 7/13/09; 9/8/09; 9/10/09; 9/28/09; 11/17/09; 11/18/09; 11/25/09; 12/24/09; 12/31/09; 4/5/10; 6/9/10; 6/14/10; 7/20/10; 7/23/10; 8/13/10; 11/24/10; 12/9/10; 1/16/11; 3/29/11; 6/30/11; 7/8/11; 9/21/12; 9/25/12; 10/11/12	3/19/09; 5/5/09	5/4/09; 5/5/09; 6/25/09; 6/29/09; 7/1/09; 7/13/09; 8/4/09; 8/10/09; 8/13/09; 9/1/09; 9/10/09; 9/30/09; 10/7/09; 10/9/09; 10/19/09; 11/3/09; 11/4/09;11/11/09; 11/17/09; 11/18/09; 11/20/09; 12/31/09; 3/31/10; 5/6/10; 6/2/10; 6/4/10; 6/21/10; 6/23/10; 7/6/10; 7/12/10; 7/16/10; 7/20/10; 7/23/10; 8/10/10; 10/15/10; 10/21/10; 10/22/10; 11/3/10; 11/11/10; 11/24/10; 12/7/10; 12/8/10; 12/14/10; 1/12/11; 1/27/11; 1/28/11; 2/22/11; 3/18/11; 3/29/11; 4/18/11; 6/21/11; 6/30/11 (3); 7/1/11; 7/8/11; 7/20/11; 7/22/11; 9/25/12		5/12/09; 7/28/09; 7/24/10; 7/25/10; 12/7/10
Iowa Tribe of Oklahoma	OK	1/30/09; 3/30/09; 4/1/09; 11/17/09; 11/18/09; 12/24/09; 12/31/09; 4/5/10; 6/9/10; 6/14/10; 7/23/10; 8/13/10; 11/24/10; 12/9/10; 1/16/11; 3/29/11; 6/30/11; 7/8/11; 9/21/12; 10/11/12	3/24/09	5/4/09; 6/25/09; 6/29/09; 7/1/09; 7/13/09; 8/4/09; 8/13/09; 9/1/09; 9/10/09; 9/30/09; 10/7/09; 10/9/09; 10/19/09; 11/3/09; 11/4/09; 11/11/09; 11/17/09; 11/18/09; 11/20/09; 12/31/09; 3/31/10; 5/6/10; 6/2/10; 6/4/10; 6/21/10; 6/23/10; 7/6/10; 7/12/10; 7/16/10; 7/23/10; 8/10/10; 10/15/10; 10/21/10; 10/22/10; 11/3/10; 11/11/10; 11/24/10; 12/7/10; 12/8/10; 12/14/10; 1/12/11; 1/27/11; 1/28/11; 2/22/11; 3/18/11; 3/29/11; 4/18/11; 6/21/11; 6/30/11 (3); 7/1/11; 7/8/11; 7/20/11; 7/22/11; 9/27/12		
Jena Band of Choctaw Indians, Louisiana	LA	1/30/09; 3/30/09; 4/1/09; 9/21/12; 10/11/12	3/19/2009; 10/10/12; 10/17/12			
Kaw Nation, Oklahoma	OK	1/30/09; 3/30/09; 4/1/09 4/22/09; 6/3/09; 6/18/09; 7/13/09; 9/8/09; 9/10/09; 9/28/09; 11/17/09; 11/18/09; 12/24/09; 12/31/09; 4/5/10; 6/9/10; 6/14/10; 7/20/10; 7/23/10; 8/13/10; 11/24/10; 12/9/10; 1/16/11; 3/29/11; 6/30/11; 7/8/11; 9/21/12; 10/11/12	3/19/09; 6/9/10; 10/16/12	5/4/09; 6/25/09; 6/29/09; 7/1/09; 7/13/09; 7/27/09; 8/4/09; 8/13/09; 9/1/09; 9/10/09 (2); 9/30/09; 10/7/09; 10/9/09; 10/19/09; 10/21/09; 11/3/09; 11/4/09; 11/11/09; 11/17/09; 11/18/09; 11/20/09; 12/31/09; 3/31/10; 5/6/10; 6/2/10; 6/4/10; 6/18/10; 6/21/10; 6/23/10; 7/6/10; 7/12/10; 7/16/10; 7/20/10; 7/23/10; 8/10/10; 10/15/10; 10/21/10; 10/22/10; 11/3/10; 11/11/10; 11/24/10; 12/7/10; 12/8/10; 12/14/10; 1/12/11; 1/27/11; 1/28/11; 2/22/11; 3/18/11; 3/29/11; 4/18/11; 4/22/11; 5/16/11; 6/21/11; 6/30/11 (3); 7/1/11; 7/8/11; 7/20/11 (5); 7/22/11; 10/17/12; 11/2/12; 11/8/12		7/28/09; 11/12/09; 10/26/12
Kialegee Tribal Town, Oklahoma	OK	1/30/09; 3/30/09; 4/1/09; 4/6/09; 4/22/09; 6/3/09; 6/18/09; 7/13/09; 8/10/09 9/8/09; 9/10/09; 9/24/09; 9/28/09; 11/17/09; 11/18/09; 11/25/09; 12/24/09; 12/31/09; 4/5/10; 6/9/10; 6/14/10; 7/23/10; 8/13/10; 11/24/10; 12/9/10; 1/16/11; 3/29/11; 6/30/11; 7/8/11; 9/21/12; 10/11/12	3/19/09; 11/10/09; 1/14/10; 3/16/10; 11/12/10; 10/16/12	5/4/09; 6/25/09; 6/29/09; 7/1/09; 7/13/09; 7/15/09 (2); 8/4/09; 8/13/09; 9/1/09; 9/10/09; 9/24/09; 9/30/09; 10/7/09; 10/9/09; 10/19/09; 10/21/09; 11/3/09; 11/4/09; 11/10/09; 11/11/09; 11/17/09; 11/18/09; 11/20/09; 12/31/09; 1/14/10; 2/8/10; 3/12/10; 3/16/10; 3/31/10; 4/9/10; 4/20/10; 5/6/10; 6/2/10; 6/4/10; 6/21/10; 6/23/10; 7/6/10; 7/12/10; 7/16/10; 7/23/10; 8/10/10; 10/15/10; 10/21/10; 10/22/10; 11/3/10; 11/11/10; 11/24/10; 12/7/10; 12/8/10; 12/9/10; 12/14/10; 1/12/11; 1/27/11; 1/28/11; 2/22/11; 3/18/11; 3/29/11; 4/18/11; 6/21/11; 6/30/11 (3); 7/1/11; 7/8/11; 7/20/11; 7/22/11	8/10/09; 11/3/10; 11/12/10	12/7/10

Record of Consultation: Indian Tribes and Nations

Indian Tribe or Nation	State	Letters	Telephone	Emails	Faxes	Meetings
Kickapoo Traditional Tribe of Texas	TX	1/30/09; 3/30/09; 4/1/09; 9/21/12; 10/11/12	3/19/2009; 10/16/12; 10/17/12			
Kickapoo Tribe of Indians of the Kickapoo Reservation in Kansas	KS	1/30/09; 3/30/09; 4/1/09 4/22/09; 6/3/09; 6/18/09; 7/13/09; 9/8/09; 9/10/09; 9/28/09; 11/17/09; 11/18/09; 12/24/09; 12/31/09; 4/5/10; 6/9/10; 6/14/10; 7/23/10; 8/13/10; 11/24/10; 12/9/10; 1/16/11; 3/29/11; 6/30/11; 7/8/11; 9/21/12; 10/11/12	3/18/09; 8/4/09; 8/6/09; 8/11/09; 9/10/09; 6/24/11; 7/6/11; 10/16/12	5/4/09; 5/7/09; 5/12/09; 6/25/09; 6/29/09; 7/1/09; 7/6/09; 7/13/09; 7/23/09; 8/4/09; 8/6/10; 8/10/10; 8/13/09; 9/1/09; 9/10/09; 9/30/09; 10/7/09; 10/9/09; 10/19/09; 11/3/09; 11/4/09; 11/11/09; 11/17/09; 11/18/09; 11/20/09; 12/31/09; 3/31/10; 5/6/10; 6/2/10; 6/4/10; 6/21/10; 6/23/10; 7/6/10; 7/12/10; 7/16/10; 7/23/10; 8/10/10; 10/15/10; 10/21/10; 10/22/10; 11/3/10; 11/11/10; 11/24/10; 12/7/10; 12/8/10; 12/14/10; 1/12/11; 1/27/11; 1/28/11; 2/22/11; 3/18/11; 3/29/11; 4/18/11; 6/21/11; 6/24/11; 6/30/11 (3); 7/1/11; 7/8/11; 7/20/11; 7/22/11		5/14/09; 7/14/09; 7/28/09
Kiowa Indian Tribe of Oklahoma	OK	1/30/09; 3/30/09; 4/1/09; 4/24/09; 6/3/09; 6/18/09; 7/13/09; 9/8/09; 9/10/09; 9/28/09; 11/17/09; 11/18/09; 12/24/09; 12/31/09; 4/5/10; 6/9/10; 6/14/10; 7/23/10; 8/13/10; 11/24/10; 12/9/10; 1/16/11; 3/29/11; 6/30/11; 7/8/11; 9/21/12; 10/11/12	3/19/09; 6/24/11; 10/16/12; 10/17/12; 11/21/12	3/25/09; 5/4/09; 5/8/09; 6/19/09; 6/25/09; 6/29/09; 7/1/09; 7/13/09; 8/4/09; 8/13/09; 9/1/09; 9/10/09; 9/30/09; 10/7/09; 10/9/09; 10/19/09; 11/3/09; 11/4/09; 11/11/09; 11/17/09; 11/18/09; 11/20/09; 12/31/09; 3/31/10; 5/6/10; 6/2/10; 6/4/10; 6/21/10; 6/23/10; 7/6/10; 7/12/10; 7/16/10; 7/23/10; 8/10/10; 10/15/10; 10/21/10; 10/22/10; 11/3/10; 11/11/10; 11/24/10; 12/7/10; 12/8/10; 12/14/10; 1/12/11; 1/27/11; 1/28/11; 2/22/11; 3/18/11; 3/29/11; 4/18/11; 6/21/11; 6/30/11 (3); 7/1/11; 7/8/11; 7/20/11; 7/22/11		
Lower Brule Sioux Tribe of the Lower Brule Reservation, South Dakota	SD	1/30/09; 2/9/09; 3/30/09; 4/1/09; 4/22/09; 6/3/09; 6/18/09; 7/13/09; 9/8/09; 9/10/09; 9/28/09; 11/17/09; 11/18/09; 12/24/09; 12/31/09; 4/5/10; 6/9/10; 7/29/10; 6/14/10; 7/23/10; 7/29/10; 8/13/10; 11/24/10; 12/9/10; 1/16/11; 3/29/11; 6/30/11; 7/8/11; 9/21/12; 10/11/12	7/10/09; 8/11/09; 10/14/09; 12/9/09; 2/2/10; 2/9/10; 3/4/10; 6/10/10; 10/10/12; 10/17/12; 10/18/12	2/6/09; 5/4/09; 6/25/09; 6/29/09; 7/1/09; 7/9/09; 7/13/09; 8/4/09; 8/13/09; 8/28/09 (2); 9/1/09; 9/10/09; 9/11/09; 9/30/09; 10/5/09; 10/7/09; 10/9/09; 10/19/09; 11/2/09; 11/3/09; 11/4/09; 11/11/09; 11/17/09; 11/18/09; 11/20/09; 12/9/09; 12/31/09; 2/2/10; 2/9/10; 3/1/10; 3/17/10; 3/31/10; 4/5/10; 4/19/10; 4/20/10; 4/30/10; 5/6/10; 6/2/10; 6/4/10; 6/21/10; 6/23/10; 7/6/10; 7/12/10; 7/16/10; 7/23/10; 7/28/10; 8/10/10; 10/15/10; 10/21/10; 10/22/10; 11/3/10; 11/11/10; 11/24/10; 12/7/10; 12/8/10; 12/14/10; 1/12/11; 1/27/11; 1/28/11; 2/22/11; 3/18/11; 3/29/11; 4/18/11; 6/21/11; 6/30/11 (3); 7/1/11; 7/8/11; 7/20/11; 7/22/11; 10/18/12 (2)		2/27/10
Lower Sioux Indian Community in the State of Minnesota	MN	1/30/09; 3/30/09; 4/1/09; 4/22/09; 6/3/09; 6/18/09; 7/13/09; 8/11/09 9/8/09; 9/10/09; 9/14/09; 9/28/09; 11/17/09; 11/18/09; 12/24/09; 12/31/09; 4/5/10; 6/9/10; 6/14/10; 7/23/10; 8/13/10; 11/24/10; 12/9/10; 1/16/11; 3/29/11; 6/30/11; 7/8/11; 9/21/12; 10/11/12	8/21/09; 11/9/09; 1/22/10; 2/26/10; 10/12/12; 10/17/12	4/23/09; 5/4/09; 6/25/09; 6/29/09; 7/1/09; 7/13/09; 8/4/09; 8/10/09; 8/11/09; 8/13/09; 8/17/09; 8/21/09; 9/1/09; 9/10/09; 9/15/09; 9/29/09; 9/30/09; 10/7/09; 10/9/09; 10/19/09; 10/29/09; 11/2/09; 11/3/09; 11/4/09; 11/11/09; 11/17/09; 11/18/09; 11/20/09; 12/31/09; 3/31/10; 5/6/10; 6/2/10; 6/4/10; 6/21/10; 6/23/10; 7/6/10; 7/12/10; 7/16/10; 7/23/10; 8/10/10; 10/15/10; 10/21/10; 10/22/10; 11/3/10; 11/11/10; 11/24/10; 12/7/10; 12/8/10; 12/14/10; 1/12/11; 1/27/11; 1/28/11; 2/22/11; 3/18/11; 3/29/11; 4/18/11; 6/21/11; 6/30/11 (3); 7/1/11; 7/8/11; 7/20/11; 7/22/11		7/14/09; 10/20/09
Match-e-be-nash-she-wish Band of Pottawatomi Indians of Michigan (aka Gun Lake Potawatomi)	MI	1/30/09; 3/6/09; 4/1/09; 9/21/12; 10/11/12	3/19/2009; 10/12/12; 10/17/12			
Mille Lacs Band of Minnesota Chippewa Tribes, Minnesota	MN	1/30/09; 3/30/09; 4/1/09; 3/29/11; 6/30/11; 7/8/11; 9/21/12; 9/27/12; 10/11/12; 10/16/12; 11/5/12	3/19/2009; 10/12/12; 10/16/12; 10/17/12	5/4/09; 6/22/09; 6/25/09; 6/29/09; 7/1/09; 7/13/09; 7/14/09; 7/27/09; 7/30/09; 8/4/09; 8/13/09; 9/1/09; 9/10/09; 9/30/09; 10/7/09; 10/9/09; 10/13/09; 10/19/09; 11/3/09; 11/4/09; 11/11/09; 11/17/09; 11/18/09; 11/20/09; 12/31/09; 3/31/10; 5/6/10; 5/21/10; 6/14/10; 6/2/10; 6/4/10; 6/18/10; 6/21/10; 6/23/10; 7/6/10; 7/12/10; 7/16/10; 7/20/10; 7/23/10; 8/10/10; 10/15/10; 10/21/10; 10/22/10; 10/25/10; 10/26/10; 11/3/10; 11/10/10; ; 11/11/10; 11/12/10; 11/24/10; 11/30/10; 12/7/10; 12/8/10; 12/14/10; 1/12/11; 1/27/11; 1/28/11; 2/22/11; 3/18/11; 3/29/11; 4/18/11; 6/21/11; 6/30/11 (3); 7/1/11; 7/8/11; 7/20/11; 7/22/11		7/14/09; 10/20/09; 7/22/10; 7/23/10
Modoc Tribe of Oklahoma	OK	1/30/2009; 9/21/12; 10/11/12	3/19/2009; 10/12/12; 10/17/12			
Nez Perce Tribe, Idaho	ID	2/19/09; 3/30/09; 4/1/09; 9/21/12; 10/11/12	10/12/12; 10/17/12			

Record of Consultation: Indian Tribes and Nations

Indian Tribe or Nation	State	Letters	Telephone	Emails	Faxes	Meetings
Northern Cheyenne Tribe of the Northern Cheyenne Indian Reservation, Montana	MT	1/30/09; 2/19/09; 3/30/09; 4/1/09; 4/8/09; 4/9/09 4/22/09; 6/3/09; 6/18/09; 7/13/09; 9/8/09; 9/10/09; 9/28/09; 11/17/09; 11/18/09; 12/24/09; 12/31/09; 4/5/10; 6/9/10; 6/14/10; 7/23/10; 8/13/10; 11/24/10; 12/9/10; 1/16/11; 3/29/11; 6/30/11; 7/8/11; 9/21/12; 10/11/12	3/19/09; 7/13/09; 10/10/12; 10/17/12	4/15/09; 5/4/09; 6/25/09; 6/29/09; 7/1/09; 7/7/09; 7/13/09; 8/4/09; 8/13/09; 9/1/09; 9/10/09; 9/14/09; 9/30/09; 10/7/09; 10/9/09; 10/19/09; 11/2/09; 11/3/09; 11/11/09; 11/17/09; 11/18/09; 11/20/09; 12/31/09; 3/31/10; 5/6/10; 6/2/10; 6/4/10; 6/21/10; 6/23/10; 7/6/10; 7/12/10; 7/16/10; 7/23/10; 8/10/10; 10/15/10; 10/21/10; 10/22/10; 11/3/10; 11/11/10; 11/24/10; 12/7/10; 12/8/10; 12/14/10; 1/12/11; 1/27/11; 1/28/11; 2/22/11; 3/18/11; 3/29/11; 4/18/11; 6/21/11; 6/30/11 (3); 7/1/11; 7/8/11; 7/20/11; 7/22/11; 11/2/12; 11/8/12		7/14/09; 10/20/09; 10/22/12
Nottawaseppi Huron Band of the Potawatomi, Michigan (aka Huron Potawatomi Nation)	MI	1/30/09; 3/30/09; 9/21/12; 10/11/12	3/19/2009; 10/10/12; 10/17/12	3/23/2009		
Oglala Sioux Tribe of the Pine Ridge Reservation, South Dakota	SD	1/30/09; 2/19/09; 3/30/09; 4/1/09 4/22/09; 6/3/09; 6/18/09; 7/13/09; 9/8/09; 9/10/09; 9/28/09; 11/17/09; 11/18/09; 12/24/09; 12/31/09; 4/5/10; 6/9/10; 6/14/10; 7/23/10; 8/13/10; 11/24/10; 12/9/10; 1/16/11; 3/29/11; 6/30/11; 7/8/11; 7/30/12; 9/21/12; 10/11/12	3/23/09; 10/10/12; 10/16/12; 10/23/12; 11/5/12; 11/6/12	5/4/09; 5/7/09; 6/25/09; 6/29/09; 7/1/09; 7/13/09; 8/4/09; 8/13/09; 9/1/09; 9/10/09; 9/30/09; 10/7/09; 10/9/09; 10/19/09; 11/2/09; 11/3/09; 11/11/09; 11/17/09; 11/18/09; 11/20/09; 12/31/09; 3/31/10; 5/6/10; 6/2/10; 6/4/10; 6/21/10; 6/23/10; 7/6/10; 7/12/10; 7/16/10; 7/23/10; 8/10/10; 10/15/10; 10/21/10; 10/22/10; 11/3/10; 11/11/10; 11/24/10; 12/7/10; 12/8/10; 12/14/10; 1/12/11; 1/27/11; 1/28/11; 2/22/11; 3/18/11; 3/29/11; 4/18/11; 6/21/11; 6/30/11 (3); 7/1/11; 7/8/11; 7/20/11(2); 7/22/11; 7/25/11; 7/30/12; 10/23/12 (3)		5/12/2009
Omaha Tribe of Nebraska	NE	1/30/09; 3/30/09; 4/1/09; 9/21/12; 10/11/12	3/19/09; 10/10/12; 10/17/12; 10/22/12	10/22/2012		
Osage Nation, Oklahoma	OK	1/30/09; 3/30/09; 4/1/09 4/22/09; 6/3/09; 6/18/09; 7/13/09; 9/8/09; 9/10/09; 9/28/09; 11/17/09; 11/18/09; 12/24/09; 12/31/09; 4/5/10; 6/9/10; 6/14/10; 7/23/10; 8/13/10; 11/24/10; 12/9/10; 1/16/11; 3/29/11; 6/30/11; 7/8/11; 9/21/12; 10/11/12	3/18/09; 3/24/09; 4/13/09; 11/10/09; 7/12/11; 10/10/12; 10/17/12	5/4/09; 6/25/09; 6/29/09; 7/1/09; 7/13/09; 8/4/09; 8/7/09; 8/13/09; 9/1/09; 9/4/09; 9/10/09; 9/30/09; 10/5/09; 10/7/09; 10/9/09; 10/13/09; 10/14/09; 10/19/09; 10/26/09; 10/27/09; 11/3/09; 11/4/09; 11/11/09; 11/17/09; 11/18/09; 11/20/09; 12/31/09; 3/31/10; 5/6/10; 6/2/10; 6/4/10; 6/8/10; 6/15/10; 6/16/10; 6/18/10; 6/21/10; 6/23/10; 7/6/10; 7/12/10; 7/16/10; 7/23/10; 8/10/10; 10/15/10; 10/21/10; 10/22/10; 11/3/10; 11/8/10; 11/11/10; 11/12/10; 11/15/10; 11/24/10; 11/29/10; 12/7/10; 12/8/10; 12/14/10; 1/12/11; 1/27/11; 1/28/11; 2/22/11; 3/18/11; 3/29/11; 4/18/11; 6/21/11; 6/30/11 (3); 7/1/11; 7/8/11; 7/12/11 (2); 7/20/11; 7/22/11		5/14/09; 7/28/09; 10/20/09; 11/12/09; 7/24/10; 7/25/10;
Otoe-Missouria Tribe of Indians, Oklahoma	OK	1/30/09; 3/30/09; 4/1/09; 9/21/12; 10/11/12	3/19/09; 10/10/12; 10/17/12			
Pawnee Nation of Oklahoma	OK	1/30/09; 3/30/09; 4/1/09; 4/6/09; 4/7/09; 4/22/09; 6/3/09; 6/18/09; 7/13/09; 9/8/09; 9/10/09; 9/11/09; 9/14/09; 9/28/09; 11/17/09; 11/18/09; 12/24/09; 12/31/09; 4/5/10; 4/30/10; 5/25/10; 6/9/10; 6/14/10; 7/23/10; 8/13/10; 9/21/10; 9/24/10; 10/20/10; 10/28/10; 11/15/10; 11/24/10; 12/9/10; 1/26/11; 3/4/11; 3/29/11(2); 4/29/11 (2); 6/30/11; 7/8/11; 9/21/12; 10/8/12; 10/11/12	3/19/09; 12/8/09; 2/9/10; 4/30/10; 5/3/10; 5/4/10; 5/5/10; 8/11/10; 9/8/10; 9/21/10; 11/22/10; 11/30/10; 12/1/10; 7/14/11; 7/29/11; 7/27/11; 10/10/12	4/7/09; 5/4/09; 5/6/09; 6/25/09; 6/29/09; 7/1/09; 7/13/09; 8/4/09; 8/13/09; 8/17/09; 9/1/09; 9/4/09; 9/9/09 (2); 9/10/09; 9/15/09; 9/30/09; 10/7/09; 10/9/09; 10/12/09; 10/19/09; 10/20/09; 11/3/09; 11/4/09; 11/11/09; 11/17/09; 11/18/09; 11/20/09; 12/8/09; 12/31/09; 2/10/10; 3/31/10; 4/29/10; 4/30/10; 5/3/10; 5/6/10; 5/24/10; 6/2/10; 6/4/10; 6/9/10; 6/16/10; 6/18/10; 6/21/10; 6/23/10; 7/6/10; 7/12/10; 7/16/10; 7/23/10; 8/10/10; 10/8/10; 10/15/10; 10/21/10; 10/22/10; 11/3/10; 11/9/10; 11/11/10; 11/12/10; 11/13/10; 11/19/10; 11/22/10; 11/24/10; 11/29/10; 12/1/10; 12/3/10; 12/7/10; 12/8/10; 12/14/10; 12/16/10; 1/12/11; 1/26/11; 1/27/11; 1/28/11; 2/11/11; 2/22/11; 3/3/11; 3/4/11; 3/5/11; 3/9/11; 3/10/11; 3/18/11; 3/29/11; 4/18/11; 4/19/11 (2); 4/29/11; 6/21/11 (2); 6/22/11; 6/30/11 (3); 7/1/11; 7/8/11; 7/14/11; 7/15/11 (2); 7/19/11 (2); 7/20/11; 7/22/11; 7/28/11; 8/2/11 (10); 5/25/12; 9/17/12; 9/18/12; 9/25/12; 9/28/12; 10/9/12 (2); 10/12/12; 10/17/12; 11/2/12; 11/8/12		5/14/09; 7/28/09; 11/12/09; 7/24/10; 7/25/10; 9/9/10; 12/7/10; 12/8/10; 10/26/12
Poarch Band of Creek Indians of Alabama	AL	1/30/09; 3/30/09; 4/1/09; 9/21/12; 10/11/12	3/19/09; 10/10/12; 10/17/12	10/14/12; 10/19/12		
Pokagon Band of Potawatomi Indians, Michigan and Indiana	MI	1/30/09; 3/30/09; 4/1/09; 9/21/12; 10/11/12	3/19/09; 10/10/12; 10/11/12			

Record of Consultation: Indian Tribes and Nations

Indian Tribe or Nation	State	Letters	Telephone	Emails	Faxes	Meetings
Ponca Tribe of Indians of Oklahoma	OK	1/30/09; 3/30/09; 4/1/09; 11/17/09; 11/18/09; 12/24/09; 12/31/09; 4/5/10; 6/9/10; 6/14/10; 7/23/10; 8/13/10; 11/24/10; 12/9/10; 1/16/11; 3/29/11; 6/30/11; 7/8/11; 9/21/12; 10/11/12	3/19/09; 10/10/12; 10/17/12	5/4/09; 6/25/09; 6/29/09; 7/1/09; 7/13/09; 8/4/09; 8/13/09; 9/1/09; 9/10/09; 9/30/09; 10/7/09; 10/9/09; 10/19/09; 11/3/09; 11/4/09; 11/11/09; 11/17/09; 11/18/09; 11/20/09; 12/31/09; 3/31/10; 5/6/10; 6/2/10; 6/3/10; 6/4/10; 6/18/10; 6/21/10; 6/23/10; 7/6/10; 7/12/10; 7/16/10; 7/23/10; 8/10/10; 10/15/10; 10/21/10; 10/22/10; 11/3/10; 11/11/10; 11/24/10; 12/7/10; 12/8/10; 12/14/10; 1/12/11; 1/27/11; 1/28/11; 2/22/11; 3/18/11; 3/29/11; 4/18/11; 6/21/11; 6/30/11 (3); 7/1/11; 7/8/11; 7/20/11; 7/22/11	8/3/2009	
Ponca Tribe of Nebraska	NE	1/30/09; 3/30/09; 4/1/09; 4/8/09; 4/22/09; 6/3/09; 6/18/09; 7/13/09; 9/8/09; 9/10/09; 9/28/09; 11/17/09; 11/18/09; 12/24/09; 12/31/09; 4/5/10; 6/9/10; 6/14/10; 7/23/10; 8/13/10; 11/24/10; 12/9/10; 1/16/11; 3/29/11; 6/30/11; 7/8/11; 9/21/12; 10/11/12	3/18/09; 10/10/12; 10/17/12; 11/5/12; 11/16/12	4/29/09; 5/4/09;6/25/09; 6/29/09; 7/1/09; 7/6/09; 7/7/09; 7/13/09; 8/4/09; 8/13/09; 9/1/09; 9/10/09; 9/30/09; 10/7/09; 10/9/09; 10/12/09 (2); 10/19/09; 11/3/09; 11/4/09; 11/11/09; 11/17/09; 11/18/09; 11/20/09; 11/17/09; 11/18/09; 11/20/09; 12/31/09; 3/31/10; 5/6/10; 6/2/10; 6/4/10; 6/21/10; 6/23/10; 7/6/10; 7/12/10; 7/16/10; 7/23/10; 8/10/10; 10/15/10; 10/21/10; 10/22/10; 11/3/10; 11/11/10; 11/24/10; 12/7/10; 12/8/10; 12/14/10; 1/12/11; 1/27/11; 1/28/11; 2/22/11; 3/18/11; 3/29/11; 4/18/11; 6/21/11; 6/30/11 (3); 7/1/11; 7/8/11; 7/20/11; 7/22/11; 10/15/12 (2); 11/2/12; 11/5/12 (2); 11/8/12		5/12/09; 7/14/09; 7/22/10; 7/23/10; 10/26/2012
Prairie Band of Potawatomi Nation, Kansas	KS	1/30/09; 3/30/09; 4/1/09; 9/21/12; 10/11/12; 10/19/12	3/18/09; 10/10/12; 10/17/12	10/10/2012; 10/17/12 (2)		
Prairie Island Indian Community in the State of Minnesota	MN	1/30/09; 3/30/09; 9/21/12; 10/11/12; 10/15/12	3/19/09; 10/10/12	3/19/2009; 10/14/12; 10/15/12		
Red Lake Band of Chippewa Indians, Minnesota	MN	1/30/09; 3/30/09; 4/1/09; 9/21/12; 10/11/12	3/19/09; 10/10/12; 10/17/12	10/14/2012		
Rosebud Sioux Tribe of the Rosebud Indian Reservation, South Dakota	SD	1/30/09; 2/19/09; 3/30/09; 4/1/09; 4/9/09; 4/22/09; 5/5/09; 5/8/09; 5/22/09; 6/3/09; 6/18/09; 7/13/09; 7/21/09 9/8/09; 9/10/09; 9/28/09; 11/17/09; 11/18/09; 11/30/09; 12/24/09; 12/31/09; 1/6/10; 2/11/10; 4/5/10; 6/9/10; 6/14/10; 6/20/10; 7/23/10; 8/13/10; 10/6/10; 11/24/10; 12/9/10; 1/16/11; 3/29/11; 6/30/11; 7/8/11; 9/21/12; 10/11/12	3/23/09; 10/12/12; 10/17/12	5/4/09; 5/6/09; 6/25/09; 6/29/09; 7/1/09; 7/13/09; 8/4/09; 8/13/09; 9/1/09; 9/10/09; 9/30/09; 10/7/09; 10/9/09; 10/13/09; 10/19/09; 10/21/09; 10/22/09; 10/23/09; 10/26/09; 11/3/09; 11/4/09; 11/11/09; 11/17/09; 11/18/09; 11/20/09; 11/30/09; 12/9/09; 12/31/09; 1/6/10; 2/11/10; 3/31/10; 5/6/10; 6/2/10; 6/4/10; 6/21/10; 6/23/10; 7/6/10; 7/12/10; 7/16/10; 7/23/10; 8/10/10; 10/15/10; 10/21/10; 10/22/10; 11/3/10; 11/11/10; 11/24/10; 12/7/10; 12/8/10; 12/14/10; 1/12/11; 1/27/11; 1/28/11; 2/22/11; 3/18/11; 3/29/11; 4/18/11; 6/21/11; 6/30/11 (3); 7/1/11; 7/8/11; 7/20/11; 7/22/11; 10/15/12; 10/18/12 (2)		5/12/09; 7/14/09; 10/20/09
Sac & Fox Nation of Missouri in Kansas and Nebraska	OK	1/30/09; 3/30/09 4/22/09; 6/3/09; 6/18/09; 7/13/09; 9/8/09; 9/10/09; 9/28/09; 11/17/09; 11/18/09; 12/24/09; 12/31/09; 4/5/10; 6/9/10; 6/14/10; 7/23/10; 8/13/10; 11/24/10; 12/9/10; 1/16/11; 3/29/11; 6/30/11; 7/8/11; 9/21/12; 10/11/12	3/19/09; 1/21/10; 11/5/10; 11/19/1;0 11/26/10; 12/3/10; 10/10/12; 10/17/12	5/4/09; 4/30/09; 5/1/09; 5/15/09; 6/25/09; 6/29/09; 7/1/09; 7/13/09; 8/4/09; 8/13/09; 9/1/09; 9/10/09; 9/30/09; 10/7/09; 10/9/09; 10/19/09; 11/3/09; 11/4/09; 11/11/09; 11/17/09; 11/18/09; 11/20/09; 12/31/09; 3/31/10; 5/6/10; 6/2/10; 6/3/10; 6/4/10; 6/17/10; 6/21/10; 6/23/10; 7/6/10; 7/12/10; 7/16/10; 7/23/10; 8/10/10; 10/15/10; 10/21/10; 10/22/10; 11/3/10; 11/11/10; 11/14/10; 11/22/10; 11/24/10; 12/1/10; 12/7/10; 12/8/10; 12/14/10; 1/12/11; 1/27/11; 1/28/11; 2/22/11; 3/18/11; 3/29/11; 4/18/11; 6/21/11; 6/30/11 (3); 7/1/11; 7/8/11; 7/20/11; 7/22/11		7/24/10; 7/25/10; 12/7/10
Sac & Fox Nation, Oklahoma	KS	1/30/09; 3/30/09; 9/21/12; 10/11/12	3/19/2009; 10/11/12			
Sac & Fox Tribe of the Mississippi in Iowa	MS	1/30/09; 3/30/09; 4/1/09; 9/21/12; 10/11/12	3/19/2009; 10/16/12			
Santee Sioux Nation, Nebraska	NE	1/30/09; 3/30/09; 4/1/09 4/22/09; 5/8/09; 6/3/09; 6/18/09; 7/13/09; 9/8/09; 9/10/09; 9/28/09; 11/17/09; 11/18/09; 12/24/09; 12/31/09; 4/5/10; 6/9/10; 6/14/10; 7/23/10; 8/13/10; 11/24/10; 12/9/10; 1/16/11; 3/29/11; 6/30/11; 7/8/11; 9/21/12; 10/11/12	3/23/09; 10/16/12; 10/17/12	5/4/09; 6/25/09; 6/29/09; 7/1/09; 7/13/09; 8/4/09; 8/13/09; 9/1/09; 9/10/09; 9/30/09; 10/7/09; 10/9/09; 10/19/09; 11/3/09; 11/4/09; 11/11/09; 11/17/09; 11/18/09; 11/20/09; 12/31/09; 3/31/10; 5/6/10; 6/2/10; 6/4/10; 6/21/10; 6/23/10; 7/6/10; 7/12/10; 7/16/10; 7/23/10; 8/10/10; 10/15/10; 10/21/10; 10/22/10; 11/3/10; 11/11/10; 11/24/10; 12/7/10; 12/8/10; 12/14/10; 1/12/11; 1/27/11; 1/28/11; 2/22/11; 3/18/11; 3/29/11; 4/18/11; 6/21/11; 6/30/11 (3); 7/1/11; 7/8/11; 7/20/11; 7/22/11		5/12/2009
Seneca-Cayuga Tribe of Oklahoma	OK	1/30/09; 3/30/09; 4/1/09; 9/21/12; 10/11/12	3/19/09; 10/16/12			

Record of Consultation: Indian Tribes and Nations

Indian Tribe or Nation	State	Letters	Telephone	Emails	Faxes	Meetings
Shakopee Mdewakanton Sioux Community of Minnesota	MN	1/30/09; 3/30/09; 4/1/09; 4/7/09; 9/21/12; 10/11/12	3/23/09; 10/17/12	3/24/2009		
Shoshone Tribe of the Wind River Reservation, Wyoming (aka Eastern Shoshone Tribe)	WY	1/30/09; 3/30/09; 4/1/09; 9/21/12; 10/11/12	10/9/12; 10/17/12			
Shoshone-Bannock Tribes of the Fort Hall Reservation of Idaho	ID	2/19/09; 3/30/09; 4/1/09 4/22/09; 6/3/09; 6/18/09; 7/13/09; 9/8/09; 9/10/09; 9/28/09; 11/17/09; 11/18/09; 12/24/09; 12/31/09; 4/5/10; 6/9/10; 11/24/10; 12/9/10; 1/16/11; 3/29/11; 6/30/11; 7/8/11; 9/21/12; 10/11/12	3/23/09; 10/9/12; 10/17/12	5/4/09; 6/25/09; 6/29/09; 7/1/09; 7/13/09; 8/4/09; 8/13/09; 9/1/09; 9/10/09; 9/30/09; 10/7/09; 10/9/09; 10/19/09; 11/3/09; 11/4/09; 11/11/09; 11/17/09; 11/18/09; 11/20/09; 12/31/09; 3/31/10; 5/6/10; 6/2/10; 6/4/10; 6/21/10; 6/23/10; 7/6/10; 7/12/10; 7/16/10; 7/23/10; 8/10/10; 10/15/10; 10/21/10; 10/22/10; 11/3/10; 11/11/10; 11/24/10; 12/7/10; 12/8/10; 12/14/10; 1/12/11; 1/27/11; 1/28/11; 2/22/11; 3/18/11; 3/29/11; 4/18/11; 6/21/11; 6/30/11 (3); 7/1/11; 7/8/11; 7/20/11; 7/22/11		
Sisseton-Wahpeton Oyate of the Lake Traverse Reservation, South Dakota	SD	1/30/09; 3/30/09; 4/1/09 4/22/09; 5/8/09; 6/3/09; 6/18/09; 7/13/09; 9/8/09; 9/10/09; 9/28/09; 11/17/09; 11/18/09; 12/24/09; 12/31/09; 4/5/10; 6/9/10; 6/14/10; 7/23/10; 8/13/10; 11/24/10; 12/9/10; 1/16/11; 3/29/11; 6/30/11; 7/8/11; 9/21/12; 10/11/12	10/13/09; 12/3/09; 4/9/10; 6/10/10; 10/9/12; 10/17/12	3/17/09; 5/4/09; 6/25/09; 6/29/09; 7/1/09; 7/13/09; 8/4/09; 8/13/09; 9/1/09; 9/10/09; 9/30/09; 10/7/09 (2); 10/9/09; 10/19/09 (2); 11/3/09; 11/4/09; 11/11/09; 11/17/09; 11/18/09; 11/20/09 (2); 12/3/09; 12/31/09; 3/31/10; 4/9/10; 6/2/10; 6/4/10; 6/21/10; 6/23/10; 7/6/10; 7/12/10; 7/16/10; 7/23/10; 8/10/10; 10/15/10; 10/21/10; 10/22/10; 11/3/10; 11/11/10; 11/24/10; 12/7/10; 12/8/10; 12/14/10; 1/12/11; 1/27/11; 1/28/11; 2/22/11; 3/18/11; 3/29/11; 4/18/11; 6/21/11; 6/30/11 (3); 7/1/11; 7/8/11; 7/20/11; 7/22/11		5/12/2009
Southern Ute Indian Tribe of the Southern Ute Reservation, Colorado	UT	1/30/09; 3/30/09; 4/1/09; 9/21/12; 10/11/12	3/18/2009; 10/9/12; 10/17/12 (2)	10/10/2012		
Spirit Lake Tribe, North Dakota	ND	1/30/09; 2/19/09; 3/30/09; 4/1/09; 4/22/09; 6/3/09; 6/18/09; 7/13/09; 8/11/09; 9/8/09; 9/10/09; 9/14/09; 9/28/09 10/1/09; 11/17/09; 11/18/09; 12/24/09; 12/31/09; 2/11/10; 2/25/10; 3/17/10; 4/5/10; 5/4/10; 6/9/10; 6/14/10; 7/23/10; 8/13/10; 11/24/10; 12/9/10; 1/16/11; 3/29/11; 6/30/11; 7/8/11; 9/21/12; 10/11/12	3/19/09; 5/4/10; 10/16/12; 10/17/12; 11/5/12; 11/6/12	5/4/09; 6/25/09; 6/29/09; 7/1/09; 7/13/09; 8/4/09; 8/13/09; 8/24/09; 9/1/09; 9/10/09; 9/15/09 (2); 9/30/09; 10/7/09; 10/9/09; 10/13/09; 10/19/09; 11/3/09; 11/4/09; 11/11/09; 11/17/09; 11/18/09; 11/20/09; 12/31/09; 2/11/10; 3/17/10; 3/31/10; 5/4/10; 5/6/10; 6/2/10; 6/4/10; 6/21/10; 6/23/10; 7/6/10; 7/12/10; 7/16/10; 7/23/10; 8/10/10; 10/15/10; 10/21/10; 10/22/10; 11/3/10; 11/11/10; 11/24/10; 12/7/10; 12/8/10; 12/14/10; 1/12/11; 1/27/11; 1/28/11; 2/11/11; 2/22/11; 3/18/11; 3/29/11; 4/18/11; 6/21/11; 6/30/11 (3); 7/1/11; 7/5/11 (2); 7/8/11; 7/20/11; 7/22/11		10/20/2009
Standing Rock Sioux Tribe of North & South Dakota	ND	1/30/09; 2/19/09; 3/30/09; 4/1/09; 4/9/09 4/22/09; 6/3/09; 6/18/09; 7/13/09; 9/8/09; 9/10/09; 9/28/09; 11/17/09; 11/18/09; 12/24/09; 12/31/09; 4/5/10; 6/9/10; 6/14/10; 7/23/10; 8/13/10; 11/24/10; 12/9/10; 1/16/11; 3/29/11; 6/30/11; 7/8/11; 9/21/12; 10/11/12	10/10/12; 10/17/12	5/4/09; 5/6/09; 5/11/09; 6/25/09; 6/29/09; 7/1/09; 7/13/09; 8/4/09; 8/13/09; 9/1/09; 9/10/09; 9/30/09; 10/7/09; 10/9/09; 10/19/09 (2); 11/3/09; 11/4/09; 11/11/09; 11/17/09; 11/18/09; 11/20/09; 12/31/09; 3/31/10; 5/6/10; 6/2/10; 6/4/10; 6/14/10; 6/15/10; 6/17/10; 6/21/10; 6/23/10; 7/6/10; 7/12/10; 7/16/10; 7/23/10; 8/10/10; 10/15/10; 10/21/10; 10/22/10; 11/3/10; 11/11/10; 11/24/10; 12/7/10; 12/8/10; 12/14/10; 1/12/11; 1/27/11; 1/28/11; 2/22/11; 3/18/11; 3/29/11; 4/18/11; 6/21/11; 6/30/11 (3); 7/1/11; 7/8/11; 7/20/11; 7/22/11; 11/2/12; 11/8/12		5/12/09; 10/20/09; 7/22/10; 7/23/10; 10/24/12
Stockbridge Munsee Community, Wisconsin	WI	1/30/09; 3/30/09; 9/21/12; 10/10/12; 10/11/12	3/19/2009		3/20/2009	
Thlopthlocco Tribal Town, Oklahoma	OK	1/30/09; 3/30/09; 4/1/09; 9/21/12; 10/11/12	10/10/12; 10/17/12			
Three Affiliated Tribes of the Fort Berthold Reservation, North Dakota	ND	1/30/09; 3/30/09; 4/1/09 4/22/09; 6/3/09; 6/18/09; 7/13/09; 9/8/09; 9/10/09; 9/28/09; 11/17/09; 11/18/09; 12/24/09; 12/31/09; 4/5/10; 6/9/10; 6/14/10; 7/23/10; 8/13/10; 11/24/10; 12/9/10; 1/16/11; 3/29/11; 6/30/11; 7/8/11; 9/21/12; 10/11/12	3/19/09; 10/10/12; 10/17/12	5/4/09; 4/29/09; 5/22/09; 6/25/09; 6/29/09; 6/30/09; 7/1/09; 7/6/09; 7/13/09; 8/4/09; 8/13/09; 9/1/09; 9/10/09; 9/30/09; 10/7/09 (2); 10/9/09 (2); 10/19/09; 11/3/09; 11/4/09; 11/11/09; 11/17/09; 11/18/09; 11/20/09; 12/31/09; 3/31/10; 5/6/10; 6/2/10; 6/4/10; 6/21/10; 6/23/10; 7/6/10; 7/12/10; 7/16/10; 7/23/10; 8/10/10; 10/15/10; 10/21/10; 10/22/10; 11/3/10; 11/11/10; 11/24/10; 12/7/10; 12/8/10; 12/14/10; 1/12/11; 1/27/11; 1/28/11; 2/22/11; 3/18/11; 3/29/11; 4/18/11; 6/21/11; 6/30/11 (3); 7/1/11; 7/8/11; 7/20/11; 7/22/11		7/14/2009

Record of Consultation: Indian Tribes and Nations

Indian Tribe or Nation	State	Letters	Telephone	Emails	Faxes	Meetings
Tonkawa Tribe of Indians of Oklahoma	OK	1/30/09; 3/30/09; 4/1/09; 3/29/11; 6/30/11; 7/8/11; 9/21/12; 10/11/12; 9/27/12	3/19/09; 10/10/12; 10/17/12	4/3/09; 5/4/09; 6/25/09; 6/29/09; 7/1/09; 7/13/09; 8/4/09; 8/13/09; 9/1/09; 9/10/09; 9/30/09; 10/7/09; 10/9/09; 10/19/09; 11/3/09; 11/4/09; 11/11/09; 11/17/09; 11/18/09; 11/20/09; 12/31/09; 3/31/10; 5/6/10; 6/2/10; 6/4/10; 6/21/10; 6/23/10; 7/6/10; 7/12/10; 7/16/10; 7/23/10; 8/10/10; 10/15/10; 10/21/10; 10/22/10; 11/3/10; 11/11/10; 11/24/10; 12/7/10; 12/8/10; 12/14/10; 1/12/11; 1/27/11; 1/28/11; 2/22/11; 3/18/11; 3/29/11; 4/18/11; 6/21/11; 6/30/11 (3); 7/1/11; 7/8/11; 7/20/11; 7/22/11; 9/27/12		
Turtle Mountain Band of Chippewa Indians of North Dakota	ND	1/30/09; 2/19/09; 3/30/09; 4/1/09 4/22/09; 6/3/09; 6/18/09; 7/13/09; 9/8/09; 9/10/09; 9/24/09; 9/28/09; 11/17/09; 11/18/09; 12/24/09; 12/31/09; 2/11/10; 4/5/10; 6/9/10; 6/14/10; 7/23/10; 8/13/10; 11/24/10; 12/9/10; 3/8/11; 3/29/11; 6/30/11; 7/8/11; 9/21/12; 10/11/12	3/19/09; 10/13/09; 12/9/09; 12/17/09; 12/18/09; 6/10/10; 10/9/12; 10/17/12	5/4/09; 6/25/09; 6/29/09; 7/1/09; 7/13/09; 8/4/09; 8/13/09; 9/1/09; 9/10/09; 9/24/09 (2); 9/30/09; 10/7/09; 10/9/09; 10/19/09; 11/3/09; 11/4/09; 11/11/09; 11/15/09; 11/17/09; 11/18/09; 11/20/09; 12/15/09; 12/18/09; 12/31/09; 2/11/10; 3/17/10; 3/18/10; 3/31/10; 5/6/10; 6/2/10; 6/4/10; 6/16/10; 6/21/10; 6/23/10; 7/6/10; 7/12/10; 7/16/10; 7/23/10; 8/10/10; 10/15/10; 10/21/10; 10/22/10; 11/3/10; 11/11/10; 11/24/10; 12/7/10; 12/8/10; 12/14/10; 1/12/11; 1/27/11; 1/28/11; 2/11/11; 2/12/11; 2/22/11; 3/18/11; 3/29/11; 4/18/11; 5/3/11; 6/21/11; 6/30/11 (3); 7/1/11; 7/8/11; 7/20/11; 7/22/11; 7/20/11 (9)	10/14/2009	10/20/2009
United Keetoowah Band of Cherokee Indians in Oklahoma	OK	1/30/09; 3/30/09; 4/1/09; 9/21/12; 10/11/12	3/19/09; 10/9/12; 10/17/12	10/17/2012		
Upper Sioux Community, Minnesota	MN	1/30/09; 3/30/09; 4/1/09; 9/21/12; 10/11/12	10/9/12; 10/17/12			
Ute Indian Tribe of the Uintah & Ouray Reservation, Utah (aka Ute Indian Tribe, also Northern Ute Tribe)	UT	1/30/09; 3/30/09; 4/1/09 4/22/09; 6/3/09; 6/18/09; 7/13/09; 9/8/09; 9/10/09; 9/28/09; 11/17/09; 11/18/09; 12/24/09; 12/31/09; 4/5/10; 6/9/10; 6/14/10; 7/23/10; 8/13/10; 11/24/10; 12/9/10; 1/16/11; 3/29/11; 6/30/11; 7/8/11; 9/21/12; 10/11/12	3/18/09; 10/9/12; 10/17/12	5/4/09; 4/29/09; 6/25/09; 6/29/09; 7/1/09; 7/13/09; 8/4/09; 8/13/09; 9/1/09; 9/10/09; 9/30/09; 10/7/09; 10/9/09; 10/19/09; 11/3/09; 11/4/09; 11/11/09; 11/17/09; 11/18/09; 11/20/09; 12/8/09; 12/31/09 ; 3/31/10; 5/6/10; 6/2/10; 6/4/10; 6/21/10; 6/23/10; 7/6/10; 7/12/10; 7/16/10; 7/23/10; 8/10/10; 10/15/10; 10/21/10; 10/22/10; 11/3/10; 11/11/10; 11/24/10; 12/7/10; 12/8/10; 12/14/10; 1/12/11; 1/27/11; 1/28/11; 2/22/11; 3/18/11; 3/29/11; 4/18/11; 6/21/11; 6/30/11 (3); 7/1/11; 7/8/11; 7/20/11; 7/22/11		
Ute Mountain Tribe of the Ute Mountain Reservation, Colorado, New Mexico and Utah	CO	1/30/09; 3/30/09; 4/1/09; 9/21/12; 10/11/12	3/19/09; 10/9/12; 10/17/12			
White Earth Band of Minnesota Chippewa Tribes, Minnesota	MN	1/30/09; 3/30/09; 4/1/09; 7/24/09; 9/21/12; 10/11/12	3/19/09; 10/9/12; 10/17/12	10/18/12 (2)		
Wichita and Affiliated Tribes (Wichita, Keechi, Waco & Tawakonie), Oklahoma	OK	1/30/09; 3/30/09; 4/1/09; 7/24/09; 11/17/09; 11/18/09; 12/24/09; 12/31/09; 4/5/10; 6/9/10; 6/14/10; 7/23/10; 8/13/10; 11/24/10; 12/9/10; 1/16/11; 3/29/11; 6/30/11; 7/8/11; 9/21/12; 10/11/12	3/19/09; 6/22/11; 10/9/12	5/4/09; 4/29/09; 5/20/09; 6/25/09; 6/29/09; 7/1/09; 7/13/09; 8/4/09; 8/13/09; 9/1/09; 9/10/09; 9/30/09; 10/7/09; 10/9/09; 10/19/09; 11/3/09; 11/4/09; 11/11/09; 11/17/09; 11/18/09; 11/20/09; 12/31/09; 3/31/10; 5/6/10; 6/2/10; 6/4/10; 6/21/10; 6/23/10; 7/6/10; 7/12/10; 7/16/10; 7/23/10; 8/10/10; 10/15/10; 10/21/10; 10/22/10; 11/3/10; 11/11/10; 11/24/10; 12/7/10; 12/8/10; 12/14/10; 1/12/11; 1/27/11; 1/28/11; 2/22/11; 3/18/11; 3/29/11; 4/18/11; 6/21/11; 6/30/11 (3); 7/1/11; 7/8/11; 7/20/11; 7/22/11; 10/9/12; 10/18/12		
Winnebago Tribe of Nebraska	NE	1/30/09; 3/30/09; 4/1/09 4/22/09; 6/3/09; 6/18/09; 7/13/09; 9/8/09; 9/10/09; 9/28/09; 11/17/09; 11/18/09; 12/24/09; 12/31/09; 4/5/10; 6/9/10; 6/14/10; 7/23/10; 8/13/10; 11/24/10; 12/9/10; 1/16/11; 3/29/11; 6/30/11; 7/8/11; 9/21/12; 10/3/12; 10/11/12	3/19/09; 6/22/11 (3); 10/9/12; 10/17/12	5/4/09; 5/5/09; 6/25/09; 6/29/09; 7/1/09; 7/13/09; 8/4/09; 8/13/09; 9/1/09; 9/10/09; 9/30/09; 10/7/09; 10/9/09; 10/19/09; 11/3/09; 11/4/09; 11/11/09; 11/17/09; 11/18/09; 11/20/09; 12/31/09; 3/31/10; 5/6/10; 6/2/10; 6/4/10; 6/21/10; 6/23/10; 7/6/10; 7/12/10; 7/16/10; 7/23/10; 8/10/10; 10/15/10; 10/21/10; 10/22/10; 11/3/10; 11/11/10; 11/24/10; 12/7/10; 12/8/10; 12/14/10; 1/12/11; 1/27/11; 1/28/11; 2/22/11; 3/18/11; 3/29/11; 4/18/11; 6/21/11; 6/30/11 (3); 7/1/11; 7/8/11; 7/20/11; 7/22/11; 10/16/12		

Record of Consultation: Indian Tribes and Nations

Indian Tribe or Nation	State	Letters	Telephone	Emails	Faxes	Meetings
Yankton Sioux Tribe of South Dakota	SD	1/30/09; 2/19/09; 3/30/09; 4/1/09 4/22/09; 6/3/09; 6/18/09; 7/13/09; 9/8/09; 9/10/09; 9/28/09; 10/19/09; 10/29/10; 11/10/09; 11/17/09; 11/18/09; 11/30/09; 12/16/10; 12/24/09; 12/31/09; 1/6/10; 1/15/10; 1/20/10; 2/22/10; 2/26/10; 4/5/10; 6/9/10; 6/14/10; 7/23/10; 8/13/10 ; 11/24/10; 12/9/10; 1/26/11; 3/29/11; 4/18/11; 6/30/11; 7/8/11; 1/30/12; 9/21/12; 10/11/12; 11/6/12	9/30/09; 10/13/09; 10/16/09; 12/15/09; 4/21/10; 11/12/10; 7/11/11; 7/14/11; 10/10/12; 10/12/12; 10/13/12; 10/15/12; 10/16/12; 11/5/12	3/17/09; 5/4/09; 5/5/09; 6/25/09; 6/29/09; 7/1/09; 7/13/09; 7/14/09; 8/4/09; 8/13/09 (2); 8/25/09 (3); 8/26/09; 9/1/09 (2); 9/10/09; 9/14/09; 9/29/09; 9/30/09; 10/7/09; 10/9/09; 10/13/09; 10/14/09 (2); 10/16/09 (2); 10/19/09; 11/3/09; 11/4/09; 11/7/09; 11/11/09; 11/12/09; 11/17/09; 11/18/09; 11/20/09 (2); 12/3/09; 12/15/09; 12/16/09 (2); 12/17/09; 12/22/09; 12/23/09; 12/24/09; 12/29/09; 12/31/09; 1/7/10; 1/13/10; 1/21/10; 1/26/10; 2/3/10; 2/12/10; 2/17/10; 2/24/10; 2/25/10; 2/28/10; 3/2/10; 3/31/10; 4/21/10; 5/6/10; 6/2/10; 6/3/10; 6/4/10; 6/7/10; 6/8/10; 6/11/10; 6/18/10; 6/21/10; 6/23/10; 7/6/10; 7/12/10; 7/16/10; 7/23/10; 8/10/10; 10/15/10; 10/21/10; 10/22/10; 11/3/10; 11/11/10; 11/24/10; 11/30/10; 12/1/10; 12/7/10; 12/8/10; 12/14/10; 1/12/11; 1/26/11 1/27/11; 1/28/11; 2/22/11; 3/18/11; 3/29/11; 4/18/11(2); 5/11/11; 6/21/11; 6/30/11 (3); 7/1/11; 7/6/11; 7/8/11; 7/20/11; 7/22/11; 9/26/12; 9/28/12 (2); 10/12/12 (3); 10/15/12; 10/17/12 (2); 10/22/12 (3); 11/2/12; 11/6/12; 11/8/12 (2); 11/14/12		10/20/09; 12/7/10; 10/22/12; 10/24/12
Ysleta Del Sur Pueblo of Texas	TX	1/30/09; 3/30/09; 4/1/09; 4/22/09; 6/3/09; 6/18/09; 7/13/09; 7/30/09; 9/21/12; 10/11/12; 10/15/12	3/19/2009; 10/9/12; 10/16/12		7/31/2009	

Record of Consultation: Government Agencies

Agency	Letters	Telephone	Emails	Faxes
ACHP	2/19/09; 3/30/09; 6/3/09; 6/18/09; 7/13/09; 9/30/09; 11/2/09; 12/24/09; 12/31/09; 4/2/10; 6/14/10; 7/23/10; 8/12/10; 11/24/10; 12/9/10; 1/14/11; 1/16/11; 2/4/11; 6/30/11; 7/8/11	7/24/09; 9/11/09; 11/19/09; 11/23/09; 1/15/10; 2/22/10; 4/8/10; 6/6/11; 7/30/10; 2/16/11; 3/4/11; 5/19/11; 7/8/11; 8/1/11	7/22/09; 8/17/09; 8/18/09; 9/1/09; 9/2/09; 9/10/09; 9/11/09; 9/14/09; 9/17/10; 9/30/09; 10/7/09; 10/9/09; 10/15/09; 10/19/09; 11/3/09; 11/4/09; 1/7/10; 1/8/10; 2/18/10; 2/19/10; 3/9/10; 3/31/10; 4/7/10; 4/19/10; 5/6/10; 6/2/10; 6/4/10; 6/21/10; 6/23/10; 7/6/10; 7/12/10; 7/16/10; 7/23/10; 8/10/10; 10/15/10; 10/21/10; 10/22/10; 11/3/10; 11/11/10; 11/15/10; 11/24/10; 12/7/10; 12/8/10; 12/13/10; 1/12/11; 1/14/11; 1/19/11; 1/21/11; 1/24/11; 1/27/11; 1/28/11; 1/30/11; 2/17/11; 2/22/11; 2/28/11; 3/3/11; 3/18/11; 3/29/11; 4/18/11 (3); 4/26/11; 6/3/11 (2); 6/16/11; 6/21/11(2); 6/22/11 (3); 6/27/11 (2); 6/28/11 (2); 6/30/11(3); 7/1/11; 7/5/11 (2); 7/8/11 (8); 7/20/11; 7/22/11; 8/1/11 (7); 8/3/11 (3)	
BIA	2/19/09; 3/30/09; 5/12/09; 6/3/09; 6/18/09; 6/25/09; 7/13/09; 9/30/09; 11/2/09; 12/24/09; 12/31/09; 4/2/10; 6/14/10; 7/23/10; 8/12/10; 11/24/10; 12/9/10; 1/18/11; 6/30/11; 7/8/11	6/23/2010	5/5/09; 5/6/09; 6/25/09; 6/29/09; 7/1/09; 7/13/09; 8/13/09; 9/1/09; 9/10/09; 9/30/09; 10/7/09; 10/9/09; 10/15/09; 10/19/09; 11/3/09; 11/4/09; 3/31/10; 4/19/10; 5/6/10; 6/2/10; 6/4/10; 6/21/10; 6/23/10; 7/6/10; 7/12/10; 7/16/10; 7/23/10; 8/10/10; 10/15/10; 10/21/10; 11/3/10; 11/11/10; 11/24/10; 12/7/10; 12/8/10; 12/9/10; 12/14/10; 1/4/11; 1/12/11; 1/14/11; 1/18/11; 1/27/11; 1/28/11; 2/22/11; 3/18/11; 3/29/11; 4/18/11; 6/21/11; 6/30/11(3); 7/1/11; 7/8/11; 7/15/11; 7/19/11 (2); 7/20/11 (3); 7/22/11	
BLM	2/19/09; 3/30/09; 6/3/09; 6/14/09; 6/18/09; 6/25/09; 7/13/09; 9/30/09; 11/2/09; 12/9/09; 12/24/09; 12/31/09; 4/2/10; 6/14/10; 7/16/10; 7/19/10; 7/23/10; 8/6/10; 8/9/10; 8/12/10; 11/24/10; 11/29/10; 12/7/10; 12/9/10; 12/15/10; 2/17/11; 2/24/11; 5/3/11; 6/13/11; 6/30/11; 7/8/11	4/13/09; 4/14/09; 4/26/09; 6/14/09; 6/25/09; 6/27/09; 8/14/09; 10/21/09; 10/23/09; 10/26/09; 11/18/09; 11/23/09; 12/10/09; 6/7/10; 6/25/10; 7/19/10; 12/2/10; 12/3/10; 4/19/11; 6/6/11; 7/13/11; 7/14/11; 7/28/11	1/30/09; 2/3/09; 2/17/099/09; 2/20/09; 4/13/09; 4/22/09; 5/1/09; 5/5/09; 6/2/09; 6/13/09; 6/25/09; 6/29/09; 6/30/09; 7/1/09; 7/7/09; 7/13/09; 8/10/09; 8/12/09; 8/13/09; 8/20/09; 9/1/09; 9/10/09; 9/14/09; 9/21/09; 9/23/09; 9/30/09; 10/2/09; 10/5/09; 10/6/09; 10/7/09; 10/8/09; 10/9/09; 10/19/09; 10/22/09; 10/26/09; 11/3/09; 11/4/09; 11/9/09; 11/11/09; 12/2/09; 12/3/09; 12/28/09; 1/19/10; 2/9/10; 3/9/10; 3/31/10; 4/1/10; 4/3/10; 4/19/10; 4/26/10; 5/6/10; 6/2/10; 6/4/10; 6/21/10; 6/23/10; 6/24/10; 7/6/10; 7/12/10; 7/16/10; 7/18/10; 7/20/10; 7/23/10; 8/3/10; 8/4/10; 8/9/10; 8/10/10; 10/15/10; 10/21/10; 11/3/10; 11/11/10; 11/24/10; 12/8/10; 12/14/10; 1/12/11; 1/14/11; 1/27/11; 1/28/11; 2/16/11; 2/22/11; 3/18/11; 3/29/11; 4/4/11; 4/15/11; 4/18/11(2); 4/21/11 (3); 4/26/11; 5/31/11; 6/13/11 (5); 6/17/11; 6/21/11; 6/28/11; 6/29/11; 6/30/11(3); 7/1/11; 7/8/11; 7/12/11(6); 7/14/11; 7/20/11(2); 7/22/11	10/15/09; 10/16/09
BOR	9/30/09 ; 11/2/09; 12/17/09; 12/24/09; 12/31/09; 1/14/10; 1/19/10; 4/2/10; 6/14/10; 7/23/10; 8/12/10; 11/24/10; 12/9/10; 12/15/10; 1/16/11; 6/30/11; 7/8/11	10/23/09; 10/26/09; 1/6/11; 6/22/11; 7/19/11	9/1/09; 9/10/09; 9/30/09; 10/7/09; 10/9/09; 10/19/09; 10/27/09; 10/30/09; 11/3/09; 11/4/09; 11/11/09; 11/17/09; 12/17/09; 1/14/10; 1/19/10; 1/20/10; 3/31/10; 4/19/10; 5/6/10; 6/2/10; 6/4/10; 6/21/10; 6/23/10; 7/6/10; 7/12/10; 7/16/10; 7/23/10; 8/10/10; 10/15/10; 10/21/10; 11/3/10; 11/11/10; 11/24/10; 12/7/10; 12/8/10; 12/14/10; 12/15/10; 1/12/11; 1/27/11; 1/28/11; 7/11/11	
MDEQ	2/19/09; 3/18/09; 3/30/09; 4/6/09; 6/3/09; 6/18/09; 6/25/09; 7/13/09; 9/30/09; 11/2/09; 12/24/09; 12/31/09; 3/30/10; 4/2/10; 6/14/10; 7/23/10; 8/12/10; 9/2/10; 9/3/10; 10/14/10; 11/24/10; 12/7/10; 12/9/10; 2/17/11; 3/7/11; 5/3/11; 6/30/11; 7/8/11	4/13/09; 4/14/09; 12/3/10; 6/6/11; 7/8/11; 7/29/11	1/30/09; 2/4/09; 4/14/09; 5/4/09; 6/10/09; 6/25/09; 6/29/09; 7/1/09; 7/2/09; 7/13/09; 8/13/09; 8/21/09; 9/1/09; 9/10/09;9/29/09; 10/2/09; 10/7/09; 10/9/09; 10/19/09; 11/3/09; 11/4/09; 11/9/09; 11/11/09; 11/17/09; 12/7/09; 1/14/10; 1/19/10; 1/20/10; 3/9/10; 3/11/10; 3/12/10; 3/23/10; 3/26/10; 3/31/10; 4/14/10; 4/19/10; 5/6/10; 6/2/10; 6/4/10; 6/21/10; 6/23/10; 7/6/10; 7/9/10; 7/12/10; 7/16/10; 7/19/10; 7/23/10; 7/26/10; 8/9/10; 8/10/10; 9/3/10; 9/30/10; 10/15/10; 10/21/10; 11/3/10; 11/8/10; 12/3/10; 12/7/10; 12/8/10; 12/14/10; 1/3/11; 1/12/11; 1/27/11; 1/28/11; 2/16/11; 2/22/11; 3/7/11; 3/18/11; 3/29/11; 4/4/11(2); 4/18/11; 4/28/11; 5/12/11 (2); 5/26/11; 5/31/11; 6/16/11; 6/21/11; 6/30/11(3); 7/1/11; 7/8/11; 7/14/11(2); 7/18/11(2); 7/20/11; 7/21/11; 7/22/11; 7/25/11(4)	
MDNRC	6/3/09; 6/12/09; 6/18/09; 7/1209; 9/30/09; 11/2/09; 12/24/09; 12/31/09; 4/2/10; 6/14/10; 7/16/10; 7/23/10; 8/12/10; 11/24/10; 12/9/10; 1/16/11; 6/30/11; 7/8/11	4/14/09; 3/26/10	4/14/09; 4/23/09; 6/25/09; 6/29/09; 7/1/09; 7/13/09; 7/20/09; 8/13/09; 9/1/09; 9/10/09; 9/30/09; 10/5/09; 10/7/09; 10/9/09; 10/12/09; 10/13/09; 10/19/09; 11/3/09; 11/4/09; 11/11/09; 11/17/09; 3/31/10; 4/19/10; 5/6/10; 6/2/10; 6/4/10; 6/21/10; 6/23/10; 6/24/10; 7/6/10; 7/7/10; 7/8/10; 7/12/10; 7/16/10; 7/23/10; 7/27/10; 8/10/10; 10/15/10; 10/21/10; 11/3/10; 12/7/10; 12/8/10; 12/14/10; 1/12/11; 1/27/11; 1/28/11; 2/22/11; 3/18/11; 3/29/11; 4/18/11; 6/21/11; 6/30/11(3); 7/1/11; 7/8/11; 7/20/11(4); 7/22/11	
NPS	2/19/09; 3/23/09; 3/30/09; 6/3/09; 6/18/09; 6/25/09; 7/13/09; 7/22/09; 8/26/09; 9/30/09; 11/2/09; 11/2309; 12/24/09; 12/31/09; 4/2/10; 6/14/10; 7/23/10; 8/6/10; 8/12/10; 9/17/10; 11/24/10; 12/9/10; 1/14/11; 2/14/11; 6/30/11; 7/8/11	4/22/09; 5/5/09; 8/12/09; 8/21/09; 9/25/09; 9/30/09; 10/8/09; 10/26/09; 3/25/10; 7/21/10; 7/1/11	5/1/09; 5/6/09; 5/8/09; 6/25/09; 6/29/09; 6/30/09; 7/1/09; 7/6/09; 7/13/09; 7/21/09; 7/22/09; 7/24/09; 8/13/09; 8/26/09; 9/1/09; 9/10/09; 9/30/09; 10/2/09; 10/7/09; 10/9/09; 10/19/09; 10/26/09; 11/3/09; 11/4/09; 11/5/09; 11/9/09; 11/11/09; 11/17/09; 1/29/10; 3/31/10; 4/19/10; 5/6/10; 6/2/10; 6/3/10; 6/4/10; 6/21/10; 6/23/10; 7/6/10; 7/12/10; 7/16/10; 7/18/10; 7/21/10; 7/23/10; 8/10/10; 9/14/10; 9/16/10; 10/12/10; 10/15/10; 10/21/10; 11/3/10; 11/5/10; 12/7/10; 12/8/10; 12/14/10; 1/12/11; 1/14/11; 1/27/11; 1/28/11; 2/14/11; 2/15/11; 2/22/11; 3/18/11; 3/29/11; 4/18/11; 4/20/11; 5/4/11; 5/19/11 (2); 6/21/11; 6/28/11; 6/29/11 (2); 6/30/11(4); 7/1/11(2); 7/8/11; 7/20/11(6); 7/22/11; 8/2/11(2); 8/3/11	

Record of Consultation: Government Agencies

Agency	Letters	Telephone	Emails	Faxes
RUS	2/19/09; 3/30/09; 6/3/09; 6/18/09; 7/13/09; 9/30/09; 11/2/09; 12/24/09; 12/31/09; 1/25/10; 4/2/10; 6/14/10; 7/23/10; 7/30/10; 8/12/10; 11/24/10; 12/9/10; 1/16/11; 4/19/11; 6/20/11; 6/30/11; 7/12/11; 7/8/11	6/29/09; 7/29/09; 10/27/09; 11/6/09; 12/4/09; 6/8/10; 6/14/10; 6/22/10; 3/8/11; 4/18/11	6/25/09; 6/29/09; 7/1/09; 7/13/09; 8/13/09; 9/1/09; 9/10/09; 9/30/09; 10/7/09; 10/9/09; 10/19/09; 10/27/09; 11/2/09; 11/3/09; 11/4/09; 11/11/09; 11/16/09; 11/17/09; 11/20/09; 12/3/09; 1/22/10; 1/23/10; 1/25/10; 3/31/10; 4/19/10; 4/28/10; 5/6/10; 5/27/10; 5/28/10; 6/2/10; 6/4/10; 6/8/10; 6/11/10; 6/14/10; 6/15/10; 6/21/10; 6/23/10; 7/6/10; 7/9/10; 7/12/10; 7/16/10; 7/23/10; 7/29/10; 8/2/10; 8/10/10; 10/15/10; 10/21/10; 11/3/10; 12/7/10; 12/8/10; 12/14/10; 1/12/11; 1/27/11; 1/28/11; 2/22/11; 3/18/11; 3/29/11; 4/18/11; 4/19/11; 6/20/11 (2); 6/21/11(2); 6/30/11(3); 7/1/11; 7/8/11; 7/12/11; 7/20/11; 7/22/11; 7/26/11(3); 7/27/11	
SHPO_KS	2/2/09; 2/10/09; 3/30/09; 4/13/09; 6/3/09; 6/18/09; 7/13/09; 7/22/09; 7/30/09; 9/18/09; 9/30/09; 10/28/09; 11/2/09; 11/3/09; 11/6/09; 11/16/09; 12/24/09; 12/31/09; 1/12/10; 4/2/10; 6/14/10; 7/16/10; 7/23/10; 7/26/10; 8/12/10; 11/24/10; 12/9/10; 12/10/10; 12/21/10; 6/4/11; 6/30/11; 7/8/11; 7/11/11; 8/16/12; 8/22/12	5/12/2011	2/11/09; 3/27/09; 3/30/09; 4/16/09; 6/25/09; 6/29/09; 7/1/09; 7/13/09; 7/31/09; 8/13/09; 9/1/09; 9/10/09; 9/30/09; 10/7/09; 10/9/09; 10/19/09; 11/3/09; 11/4/09; 11/6/09; 11/10/09; 11/11/09; 11/17/09; 1/12/10; 1/13/10; 3/31/10; 4/19/10; 4/23/10; 5/6/10; 6/2/10; 6/4/10; 6/21/10; 6/23/10; 7/6/10; 7/12/10; 7/16/10; 7/23/10; 8/2/10; 8/10/10; 10/15/10; 10/21/10; 11/3/10; 12/3/10; 12/7/10; 12/8/10; 12/14/10; 1/12/11; 1/27/11; 1/28/11; 2/22/11; 3/18/11; 3/29/11; 4/18/11; 5/11/11; 5/12/11; 5/13/11 (5); 5/31/11 (3); 6/3/11 (2); 6/17/11 (3); 6/21/11; 6/28/11 (2); 6/30/11(3); 7/1/11; 7/8/11(2); 7/20/11; 7/22/11	10/26/2009
SHPO_MT	2/2/09; 2/20/09; 3/30/09; 4/17/09; 4/22/09; 6/3/09; 6/12/09; 6/18/09; 6/22/09; 7/2/09; 7/8/09; 7/13/09; 7/17/09; 9/30/09; 11/2/09; 11/13/09; 12/14/09; 12/24/09; 12/31/09; 1/11/10; 4/2/10; 6/14/10; 7/16/10; 7/23/10; 7/28/10; 8/5/10; 8/6/10; 8/12/10; 11/24/10; 11/29/10; 12/7/10; 12/9/10; 12/16/10; 1/14/11; 2/17/11; 2/28/11; 5/3/11; 6/2/11; 6/30/11; 7/8/11(2); 7/28/11; 7/2/12; 7/11/12	4/1/09; 4/14/09; 10/14/09; 10/20/09; 1/14/10 6/6/11; 7/2/10; 7/28/10; 8/26/10; 7/7/11; 7/28/11	2/6/09; 6/12/09; 6/25/09; 6/29/09; 7/1/09; 7/6/09; 7/7/09; 7/13/09; 8/13/09; 9/1/09; 9/10/09; 9/30/09; 10/2/09; 10/5/09; 10/7/09; 10/9/09; 10/12/09; 10/19/09; 10/20/09; 11/3/09; 11/4/09; 11/11/09; 11/17/09; 11/24/09; 1/7/10; 1/11/10; 1/13/10; 1/14/10; 1/15/10; 1/19/10; 2/4/10; 3/31/10; 4/19/10; 5/6/10; 5/14/10; 6/2/10; 6/4/10; 6/21/10; 6/23/10; 6/24/10; 7/1/10; 7/6/10; 7/7/10; 7/12/10; 7/16/10; 7/23/10; 7/27/10; 7/28/10; 8/2/10; 8/9/10; 8/10/10; 8/19/10; 8/26/10; 10/15/10; 10/21/10; 10/28/10; 11/3/10; 11/11/10; 12/7/10; 12/8/10; 12/10/10; 12/14/10; 12/29/10; 1/4/11; 1/5/11; 1/12/11; 1/27/11; 1/28/11; 2/16/11; 2/17/11; 2/22/11; 3/18/11; 3/29/11; 4/4/11(2); 4/18/11; 5/26/11; 5/31/11; 6/2/11; 6/3/11 (3); 6/16/11; 6/17/11; 6/21/11(2); 6/28/11; 6/29/11; 6/30/11(3); 7/1/11(2); 7/6/11; 7/7/11; 7/8/11; 7/20/11; 7/22/11; 7/29/11	8/3/2009
SHPO_NE	2/2/09; 2/20/09; 3/17/09; 3/30/09; 4/17/09; 6/3/09; 6/12/09; 6/18/09; 6/22/09; 7/2/09; 7/13/09; 9/30/09; 10/30/09; 11/2/09; 11/3/09; 11/16/09; 12/24/09; 12/31/09; 4/2/10; 6/14/10; 7/16/10; 7/23/10; 8/12/10; 9/20/10; 11/24/10; 12/9/10; 3/2/11; 3/4/11; 3/18/11; 4/7/11; 4/14/11; 4/29/11; 5/4/11; 5/10/11; 6/4/11; 6/15/11; 6/24/11; 6/30/11; 7/8/11; 7/25/11; 6/28/12; 7/19/12	3/23/09; 4/1/09; 4/14/09; 9/28/10; 10/4/10; 11/11/10; 11/15/10; 11/16/10; 3/18/11; 4/15/11; 6/3/11; 7/15/11; 8/1/11	6/12/09; 6/25/09; 6/29/09; 7/1/09; 7/13/09; 8/13/09; 9/1/09; 9/10/09; 9/30/09; 10/7/09; 10/9/09; 10/19/09; 11/3/09; 11/4/09; 11/11/09; 11/17/09; 3/31/10; 4/19/10; 5/6/10; 6/2/10; 6/4/10; 6/21/10; 6/23/10; 7/6/10; 7/12/10; 7/16/10; 7/23/10; 8/10/10; 9/20/10; 9/29/10; 10/14/10; 10/15/10; 10/21/10; 11/3/10; 11/5/10; 11/16/10; 11/19/10; 11/29/10; 12/1/10; 12/2/10; 12/7/10; 12/8/10; 12/14/10; 1/12/11; 1/26/11; 1/27/11; 1/28/11; 2/22/11; 3/3/11; 3/18/11; 3/29/11; 4/18/11(2); 4/29/11; 5/4/11; 5/31/11 (3); 6/2/11 (3); 6/3/11 (6); 6/6/11 (3), 6/9/11; 6/10/11 (2), 6/15/11; 6/21/11; 6/28/11; 6/29/11 (2); 6/30/11(3); 7/1/11; 7/5/11 (2); 7/8/11; 7/15/11 (4); 7/20/11; 7/22/11;7/25/11(5); 8/2/11; 8/3/11(2); 8/3/12	8/3/2009
SHPO_SD	2/2/09; 2/9/09; 2/20/09; 3/30/09; 4/17/09; 4/23/09; 6/3/09; 6/12/09; 6/18/09; 6/22/09; 7/2/09; 7/13/09; 7/22/09; 8/13/09; 9/30/09; 11/2/09; 11/3/09; 11/24/09; 12/24/09; 12/31/09; 1/14/10; 4/2/10; 6/14/10; 7/16/10; 7/23/10; 8/4/10; 8/5/10; 8/9/10; 8/12/10; 10/26/10; 11/24/10; 12/2/10; 12/9/10; 12/14/10; 1/4/11; 1/10/11; 1/27/11; 2/4/11; 2/16/11; 2/17/11; 2/22/11; 2/24/11; 2/25/11; 3/1/11; 4/18/11; 6/4/11; 6/30/11; 7/8/11(2); 7/2/12; 7/12/12	4/1/09; 9/29/09; 10/30/09; 1/6/10; 2/17/11; 4/18/11; 6/2/11; 7/1/11; 7/14/11	4/1/09; 4/15/09; 4/27/09; 5/4/09; 6/12/09; 6/25/09; 6/29/09; 7/1/09; 7/13/09; 8/5/09; 8/13/09; 9/1/09; 9/10/09; 9/30/09; 10/7/09; 10/9/09; 10/19/09; 10/30/09; 11/2/09; 11/3/09; 11/4/09; 11/5/09; 11/11/09; 11/17/09; 12/29/09; 1/5/10; 1/6/10; 1/11/10; 1/12/10; 1/14/10; 3/31/10; 4/19/10; 5/6/10; 6/2/10; 6/4/10; 6/21/10; 6/23/10; 6/29/10; 7/6/10; 7/12/10; 7/16/10; 7/23/10; 8/10/10; 10/15/10; 10/21/10; 11/3/10; 12/7/10; 12/8/10; 12/14/10; 1/12/11; 1/27/11; 1/28/11; 2/16/11; 2/22/11; 2/23/11; 2/25/11; 2/28/11; 3/1/11; 3/18/11; 3/23/11; 3/25/11; 3/29/11; 4/4/8/11; 4/14/11; 4/15/11; 4/18/11 (4); 4/19/11 (3); 4/20/11; 4/26/11; 6/1/11; 6/2/11; 6/3/11 (2); 6/7/11 (2); 6/8/11; 6/13/11; 6/14/11; 6/15/11; 6/21/11; 6/29/11 (2); 6/30/11(3); 7/1/11(2); 7/6/11; 7/8/11(2); 7/15/11; 7/20/11(2); 7/22/11	
USACE	2/19/09; 3/30/09; 6/3/09; 6/12/09; 6/18/09; 6/25/09; 7/13/09; 8/20/09; 9/30/09; 10/13/09; 10/19/09; 11/2/09; 11/25/09; 12/24/09; 12/31/09; 4/2/10; 6/14/10; 7/23/10; 8/12/10; 11/24/10; 12/9/10; 1/16/11; 6/30/11; 7/8/11	5/7/09; 10/9/09; 7/8/11	3/4/09; 4/14/09; 4/15/09; 4/27/09; 5/6/09; 5/11/09; 6/10/09; 6/25/09; 6/29/09; 7/1/09; 7/13/09; 7/21/09; 8/13/09; 8/20/09; 9/1/09; 9/10/09; 9/30/09; 10/1/09; 10/5/09; 10/7/09; 10/8/09; 10/9/09; 10/13/09; 10/19/09; 10/21/09; 11/2/09; 11/3/09; 11/4/09; 11/10/09; 11/11/09; 11/17/09; 11/23/09; 2/23/10; 3/31/10; 4/19/10; 4/30/10; 5/6/10; 5/7/10; 6/2/10; 6/3/10; 6/4/10; 6/7/10; 6/17/10; 6/18/10; 6/21/10; 6/23/10; 7/6/10; 7/12/10; 7/16/10; 7/23/10; 8/10/10; 9/15/10; 9/21/10; 9/22/10; 10/4/10; 10/5/10; 10/15/10; 10/16/10; 10/21/10; 10/22/10; 10/26/10; 11/3/10; 11/12/10; 11/22/10; 11/29/10; 12/7/10; 12/8/10; 12/14/10; 1/3/11; 1/12/11; 1/14/11; 1/27/11; 1/28/11; 2/22/11; 3/18/11; 3/29/11; 4/18/11; 6/21/11; 6/30/11(3); 7/1/11(3); 7/5/11; 7/8/11 (5); 7/20/11(2); 7/22/11; 8/1/11; 8/2/11(2); 9/28/12	
USDA FSA	2/19/09; 3/30/09; 6/3/09; 6/18/09; 7/13/09; 7/20/09; 9/30/09; 11/2/09; 12/24/09; 12/31/09; 4/2/10; 6/14/10; 7/23/10; 8/12/10; 11/24/10; 12/9/10; 1/16/11; 6/30/11; 7/8/11		6/22/09; 6/25/09; 6/29/09; 7/1/09; 7/13/09; 7/20/09; 8/13/09; 9/1/09; 9/10/09; 9/30/09; 10/7/09; 10/9/09; 10/19/09; 11/3/09; 11/4/09; 11/11/09; 11/17/09; 3/31/10; 4/19/10; 5/6/10; 6/2/10; 6/4/10; 6/21/10; 6/23/10; 7/6/10; 7/12/10; 7/16/10; 7/23/10; 8/10/10; 10/15/10; 10/21/10; 11/3/10; 12/7/10; 12/8/10; 12/14/10; 1/12/11; 1/27/11; 1/28/11; 2/22/11; 7/20/11; 7/21/11(2)	

Record of Consultation: Government Agencies

Agency	Letters	Telephone	Emails	Faxes
USDA NRCS	2/19/09; 3/30/09; 5/29/09; 6/3/09; 6/18/09; 7/13/09; 9/30/09; 11/2/09; 12/24/09; 12/31/09; 4/2/10; 6/14/10; 7/23/10; 8/12/10; 11/24/10; 12/9/10; 1/16/11; 6/30/11; 7/8/11	3/26/2010	6/25/09; 6/29/09; 7/1/09; 7/13/09; 8/13/09; 9/1/09; 9/10/09; 9/30/09; 10/7/09; 10/9/09; 10/19/09; 11/3/09; 11/4/09; 11/11/09; 11/17/09; 3/26/10; 3/31/10; 4/19/10; 5/6/10; 6/2/10; 6/4/10; 6/21/10; 6/23/10; 7/6/10; 7/12/10; 7/16/10; 7/23/10; 8/10/10; 8/11/10;; 8/12/10; 10/15/10; 10/21/10; 11/3/10; 12/7/10; 12/8/10; 12/14/10; 1/12/11; 1/27/11; 1/28/11; 2/22/11; 3/18/11; 3/29/11; 4/18/11; 6/21/11; 6/30/11(3); 7/1/11; 7/8/11; 7/20/11(2); 7/22/11; 7/28/11; 7/29/11; 8/3/11(3)	
USFWS	2/19/09; 3/30/09; 6/3/09; 6/18/09; 7/13/09; 9/30/09; 11/2/09; 12/24/09; 12/31/09; 4/2/10; 6/14/10; 7/23/10; 8/12/10; 11/24/10; 12/9/10; 1/16/11; 6/30/11; 7/8/11		6/25/09; 6/29/09; 7/1/09; 7/13/09; 8/13/09; 9/1/09; 9/10/09; 9/30/09; 10/7/09; 10/9/09; 10/19/09; 11/3/09; 11/4/09; 11/11/09; 11/17/09; 3/31/10; 4/19/10; 5/6/10; 6/2/10; /4/10; 6/21/10; 6/23/10; 7/6/10; 7/12/10; 7/16/10; 7/23/10; 8/10/10; 10/15/10; 10/21/10; 11/3/10; 12/7/10; 12/8/10; 12/14/10; 1/12/11; 1/27/11; 1/28/11; 2/22/11; 3/18/11; 3/29/11; 4/18/11; 6/21/11; 6/30/11(3); 7/1/11; 7/8/11; 7/20/11; 7/22/11	
Western	4/14/09; 6/3/09; 6/18/09; 7/13/09; 9/30/09; 11/2/09; 12/24/09; 12/31/09; 1/26/10; 4/2/10; 6/14/10; 7/23/10; 8/12/10; 11/24/10; 12/9/10; 1/16/11; 6/30/11; 7/8/11	9/15/09; 2/8/10; 2/17/10; 2/19/10; 3/26/10; 8/16/10; 9/13/10; 9/23/10; 10/15/10; 10/19/10; 10/20/10; 11/15/10; 11/30/10	9/14/09; 9/16/09; 9/17/09; 9/18/09; 1/25/10; 1/26/10; 1/28/10; 1/29/10; 2/1/10; 2/8/10; 2/17/10; 2/18/10; 3/1/10; 3/8/10; 3/18/10; 3/31/10; 4/19/10; 5/6/10; 6/2/10; 6/4/10; 6/21/10; 6/23/10; 7/6/10; 7/12/10; 7/16/10; 7/23/10; 8/10/10; 9/7/10; 9/13/10; 10/15/10; 10/18/10; 10/21/10; 10/25/10; 11/3/10; 11/5/10; 11/16/10; 12/7/10; 12/8/10; 12/14/10; 1/12/11; 1/27/11; 1/28/11; 2/22/11; 3/18/11; 3/29/11; 4/18/11; 6/21/11; 6/30/11(3); 7/1/11; 7/8/11; 7/20/11; 7/22/11	

Notes:
ACHP = Advisory Council on Historic Preservation
BIA = Bureau of Indian Affairs
BLM = Bureau of Land Management
BOR = U.S. Bureau of Reclamation
MDEQ = Montana Department of Environmental Quality
MDNRC = Montana Department of Natural Resources and Conservation
NPS = U.S. Department of the Interior, National Park Service
RUS = Rural Utilities Service
SHPO_KS = State Historic Preservation Office, Kansas
SHPO_MT = State Historic Preservation Office, Montana
SHPO_NE = State Historic Preservation Office, Nebraska
SHPO_SD = State Historic Preservation Office, South Dakota
USACE = U.S. Army Corps of Engineers
USDA FSA = U.S. Department of Agriculture, Farm Service Agency
USDA NRCS = U.S. Department of Agriculture, Natural Resources Conservation Service

-This page intentionally left blank-

APPENDIX F

Scoping Summary Report

-This page intentionally left blank-

United States Department of State

SCOPING SUMMARY FOR THE KEYSTONE XL PROJECT SUPPLEMENTAL ENVIRONMENTAL IMPACT STATEMENT

1.0 INTRODUCTION

TransCanada Keystone Pipeline, LP (Keystone) has applied to the United States Department of State (the Department) for a Presidential Permit at the border of the United States for the proposed construction, connection, operation, and maintenance of facilities for importing crude oil from Canada. On June 15, 2012, the Department issued a Notice of Intent (NOI) to prepare a Supplemental Environmental Impact Statement (EIS) consistent with the National Environmental Policy Act of 1969 (NEPA), to address reasonably foreseeable impacts from the proposed action and alternatives.

The NOI informed the public about the proposed action, announced plans for public scoping opportunities, invited public participation in the scoping process, and solicited public comments for consideration in establishing the scope and content of the Supplemental EIS. The scoping period extended from June 15 to July 30, 2012.

2.0 SCOPING COMMENTS

2.1 PUBLIC, AGENCY, AND STAKEHOLDER COMMENTS

Comments from letters and emails received during the scoping period were entered into the administrative record, reviewed, and assigned an issue code. In total, 406,712 letters, cards, emails, e-comments, or telephone conversation records (henceforth referred to as "submissions") were received from the public, agencies, and other interested groups and stakeholders. Of this total, 405,813 were duplicate form letters sponsored by nongovernmental organizations (NGOs), while the remaining 899 were not form letters. The 406,712 submissions contained 6,551 unique, substantive comments. These comments were evaluated and addressed as appropriate in the Supplemental EIS. Issues addressed in comments from all of these sources are summarized in this scoping summary document.

All comments were categorized by the specific issue addressed in the comment and entered into a database for ease of review. The following sections summarize the comments by EIS section or issue. Comments have been summarized as appropriate, particularly for concerns that were raised by several commenters. Statements regarding the *Final EIS* refer to the Final EIS for the Keystone XL Pipeline Project, published on August 26, 2011.

2.1.1 Purpose and Need

1. Re-evaluate the purpose and need for the proposed Project to determine whether execution of this Project is in the United States' national interest, specifically in light of concerns

about climate change, and U.S. goals of reducing fossil fuel consumption and dependence on foreign petroleum sources, as well as other broad economic and environmental policies.

2. The Final EIS was flawed and should not be used as a baseline for a supplemental review; as a result, the Supplemental EIS must include a revised purpose and need, including revised supporting documentation. In particular, this includes revised crude oil demand projections (to account for refinements to the projections used to establish the purpose and need in the Final EIS).
3. The purpose and need for the proposed Project, particularly the National Interest Determination (NID), should be reconsidered in light of the Project's role in facilitating oil exports, rather than satisfying domestic demand.
4. The Steele City and Gulf Coast segments of the Keystone XL Project are interdependent parts of one larger project, and should be evaluated as such. If the Department chooses to evaluate the currently proposed Project as an independent segment, it must incorporate a different purpose and need for the Project.
5. There is considerable existing unused pipeline capacity, as well as other planned pipeline capacity to transport crude oil from Canada or the Bakken to the Gulf Coast. The purpose and need in the Supplemental EIS should only define the Project as transporting crude oil between Alberta and Steele City, Nebraska.
6. The need for the proposed Project should be reexamined in light of decreasing domestic demand for petroleum products (imported and domestically produced).
7. The purpose and need for the proposed Project should be reevaluated in light of the benefits of focusing on renewable energy sources rather than fossil fuels, and the degree to which future development of renewable sources would offset demand for crude oil.
8. As currently conceived, the proposed Project's benefits are outweighed by the potential environmental risks. The purpose and need for the proposed Project should be re-evaluated in this light.
9. To help achieve U.S. goals of energy security and reduced carbon emissions, the proposed Project should only be approved if it includes mitigation measures, such as carbon offsets, provided by the applicant.
10. The proposed Project should be approved because it would provide employment, other economic benefits, and reduced dependence on oil from hostile countries.

2.1.2 Project Description

1. The Supplemental EIS should not evaluate the Gulf Coast segment as part of the proposed Project (i.e., the Steele City segment) because Keystone is independently pursuing the Gulf Coast segment.
2. The Supplemental EIS should evaluate the Gulf Coast segment as a connected action.
3. The Supplemental EIS should identify required inspection and monitoring measures and the frequency that these measures will be implemented.

4. Specific project requirements (especially drilling techniques) should be implemented for the protection of Wild and Scenic Rivers and their related tributaries/upstream segments, flood plains, and other sensitive resources.
5. Provide as rigorous an analysis for the natural resources of the newly proposed routes as done for the previously proposed route. Specifically, the Supplemental EIS must analyze impacts related to ground and surface water resources, seismic risks, soils, vegetation, taxes, employment, cultural resources, and natural resources including, but not limited to, endangered species, parks, recreational waterways, fisheries, wildlife, and conservation lands.
6. As part of the proposed Project, Keystone should commit to greater use of the recommended seed mixes at the time of reclamation; to use seed mixes containing native vegetation, especially for areas of native short- and tall-grass prairie communities; and to inspect all disturbed areas after the first growing season to determine revegetation success and to perform noxious weed control.
7. Keystone should be required to have substantial funds in escrow to be used for pipeline spill response, recovery, and compensation of affected parties.
8. Keystone should be required to demonstrate the presence of spill response materials and properly trained personnel within reasonable proximity of all segments of the pipeline and all ancillary facilities.
9. The adequacy of available or planned crude oil storage in Cushing, Oklahoma and the Gulf Coast area should be addressed, given existing reported deficiencies.
10. The Supplemental EIS should discuss the economic impacts of refinery changeover necessary to process extracted bitumen.
11. The timeframe evaluated in the Supplemental EIS must match that of the extraction and production of the oil sands the proposed Project would transport.

2.1.3 Soils and Geology

12. The Supplemental EIS must fully consider how the following soil-related conditions impact or are impacted by pipeline construction and operation: drought, increased soil temperatures over the pipeline, increased risk of soil subsidence and instability, and difficulty of revegetating the pipeline right-of-way in drought conditions.
13. The pipeline route should avoid sandy soils altogether, in favor of clay-based soils. There is no safe route through the Ogallala Aquifer.

2.1.4 Water Resources

1. The Supplemental EIS should disclose practices that will ensure pipeline integrity, including methods and monitoring that will protect water resources.
2. The Nebraska Department of Environmental Quality (NDEQ)-identified Sand Hills Region only encompasses a portion of the sandy soils and aquifer recharge areas that are of concern along the proposed route.

3. The Supplemental EIS should include alternatives that avoid the Ogallala Aquifer and the NDEQ-identified Sand Hills Region, and that avoid impacts to the Mni Wiconi water supply system. The alternatives analysis must also address the way that the extended drought and record heat in the U.S. affect the proposed Project's potential impacts on water resources.
4. Previous analyses improperly relied on the U.S. Army Corps of Engineers Section 404 Clean Water Act permitting process to address impacts to waters, and did not evaluate water resources in appropriate detail; the Supplemental EIS should include its own analysis of water impacts.
5. The Supplemental EIS should clearly evaluate (through text and maps) the linkages between the proposed pipeline, distance to groundwater, and proximity to drinking water in the Ogallala Aquifer and NDEQ-identified Sand Hills Region.
6. The Supplemental EIS should include provisions for protecting groundwater, stream, and wetland resources at crossing points and along the entire route of the proposed pipeline.

2.1.5 Wetlands

1. The Supplemental EIS should identify wetlands, vegetation, wildlife, and fish (including threatened and endangered species) that may be affected by the newly proposed alternative routes, and should evaluate potential impacts on wetland functions.
2. The Supplemental EIS should provide an analysis of impacts associated with ancillary facilities and connected actions, including staging areas, access roads, construction camps and storage locations. The following specific topics should be discussed:
   - Compensatory mitigation for losses of aquatic resources and wetland functions and services;
   - A thorough conceptual wetland monitoring plan;
   - Information on the proposed areas of construction zones and rights-of-way for wetland crossings;
   - More detailed information about which wetland areas would be revegetated, and which wetland areas are considered of "special concern and value:"
   - Equal mitigation commitments for connected actions, including transmission lines; and
   - Analysis of prairie pothole wetlands and bottomland hardwood forested wetlands.

2.1.6 Vegetation, Fish, Wildlife, and Threatened and Endangered Species

1. The Supplemental EIS should provide information that addresses the direct and indirect impacts of pipeline construction and operation on endangered and threatened species, specifically related to the whooping crane, American burying beetle, pallid sturgeon, piping plover, interior least tern, western prairie-fringed orchid, and woodland caribou.
2. The Supplemental EIS should provide the Biological Assessment and Biological Opinion in an appropriate timeframe to allow public comment.
3. The Supplemental EIS is required by the Endangered Species Act (ESA) to evaluate the impacts of the proposed Project in Canada; these activities may also "be cause for

certification" under the Pelly Amendment, and may diminish the effectiveness of the Western Hemisphere Convention and the Migratory Bird Convention.

4. The Bureau of Land Management (BLM) has responsibility for designating and protecting sensitive species on BLM-managed lands that require special management consideration to promote their conservation and reduce the likelihood and need for future listing under the ESA. As such, BLM must analyze the impacts to resources, including sensitive species and habitat, affected by the proposed Project.
5. The Supplemental EIS should assess extraterritorial or trans-boundary impacts such as greenhouse gas emissions and migratory bird habitat destruction from increased tar sands extraction.
6. The Supplemental EIS should address the impact of temporarily disrupted habitat connectivity during construction activities and provide mitigation measures including native plant restoration and invasive species treatment.
7. The Supplemental EIS should provide an analysis of the proposed Project's impacts to water resources and sensitive wildlife species.
8. The Department should work closely with United States Fish and Wildlife Service (USFWS) and the South Dakota Game, Fish and Parks, respectively, in developing conservation plans to help avoid or minimize potential Project impacts to birds, and incorporate these conservation measures into the Supplemental EIS. The Supplemental EIS should include a Migratory Bird Conservation Plan and a sage-grouse conservation plan to help avoid and minimize expected impacts to birds and their habitats in the states where the proposed Project will be constructed, operated, and maintained.
9. The Department should consult with the USFWS regarding mussel surveys, relocation protocols or mussel propagation and reintroduction.
10. The Supplemental EIS should include provisions that ensure compliance with the Migratory Bird Treaty Act (MBTA) or prevention of the take of migratory birds (including those resulting from oil sump pits and other contamination related to oil production); address the potential impacts of power lines, noise from blasting and operation of pump stations, and loss of habitat resulting from blasting and ripping of rock outcrops used for nesting and foraging. Also, the Supplemental EIS should provide information to assure compliance with the Western Hemisphere Convention and the Migratory Bird Convention.
11. The Supplemental EIS should provide an analysis of the Pelly Amendment of the Fisherman's Protective Act of 1967 as it pertains to the proposed Project, specifically that tar sands development diminishes the effectiveness of the treaties protecting wildlife and fails to prevent takings of woodland caribou and migratory birds, including whooping cranes.
12. The Supplemental EIS should address habitat connectivity issues and associated mitigation.

2.1.7 Land Use

1. The BLM must ensure compliance with land use plans and all federal, state, and local laws and ordinances before granting a right-of-way, and should extract reimbursements for such rights-of-way, where appropriate.

2. The Supplemental EIS should evaluate impacts from the proposed Project on parks and conservation lands, including National Park Service (NPS) units and affiliated areas.

2.1.8 Socioeconomics

1. The Supplemental EIS should include a revised environmental justice analysis.
2. The Supplemental EIS should evaluate the impacts of the proposed product on oil production and oil prices within the U.S.
3. The No Action alternative in the Final EIS did not adequately incorporate U.S. and Canadian export data sources.
4. The Supplemental EIS should disclose how changes to the proposed Project impact property values and tax benefits.
5. The Supplemental EIS should disclose how farmers will be impacted by the proposed Project changes.
6. The Supplemental EIS should disclose how changes to the proposed Project impact job creation predictions.
7. The Supplemental EIS should include a more complete population growth analysis.
8. The Supplemental EIS should discuss the proposed Project's impacts on transportation infrastructure.

2.1.9 Cultural Resources

1. Further consultation, including a tribal consultation plan, is needed and should be disclosed in the Supplemental EIS to address the presence of cultural sites and tribal members' use of resources.
2. The Supplemental EIS should discuss the federal government's trust responsibility and address potential impacts to and proposed mitigation for resources that are culturally important to tribes.
3. The Supplemental EIS should detail a clear process regarding the inadvertent discovery of cultural resources.
4. The process for legally crossing existing water pipeline easements that the Oglala Sioux Tribe owns and operates should be followed and disclosed in the Supplemental EIS.
5. The process for legally transporting oil through tribal lands should be followed and disclosed in the Supplemental EIS.
6. The affected tribes should be granted cooperating agency status.
7. The Oglala Tribe has not given its permission to Keystone to have the proposed Project cross over the Tribe's Mni Wiconi Project water pipeline easements; the proposed Project would trespass on tribal and fee lands.
8. A new Programmatic Agreement should be developed for the Supplemental EIS.

2.1.10 Air Quality and Noise

Note: Additional comments about climate change and greenhouse gas (GHG) emissions from downstream use of bitumen or upstream bitumen extraction are included in the Climate Change section below.

1. The Supplemental EIS should analyze GHG emissions resulting from additional tar sands production in Canada, due to the causal link between construction and operation of the pipeline and additional tar sands production.
2. The Supplemental EIS should provide an analysis of the increased GHG emissions associated with construction and operation of the proposed Project.
3. The Supplemental EIS should include petroleum coke (petcoke) production and consumption in the life cycle impacts of tar sands crude oil production, as well as increased petcoke production in U.S. refineries.
4. The Supplemental EIS should review the trans-boundary impacts of increased tar sands crude oil exports on the proposed Project, including increased climate emissions, regardless of whether production of tar sands crude oil would increase by other means.
5. The Supplemental EIS should provide an analysis of local impacts of increased refinery emissions in the Gulf Coast region, associated with the proposed Project operation.
6. The Supplemental EIS should provide an analysis of how GHG emissions associated with pipeline operation and tar sands oil extraction and processing can be mitigated (including by energy efficiency, energy conservation, and green power utilization for pipeline operations).
7. Concerns about Project-related noise are not adequately addressed in the Final EIS.

2.1.11 Potential Releases from the Proposed Project Construction and Operational/ Environmental Consequence Analysis (Risk)

1. The Supplemental EIS should analyze the risks to groundwater and drinking water, specifically the Ogallala Aquifer and Mni Wiconi Project, due to a spill along the pipeline.
2. The Supplemental EIS should analyze the risks to surface water, wildlife, and vegetation (as well as threatened and endangered species) due to a spill.
3. The proposed Project should be evaluated in light of the increased risk of damage due to heavy flooding events and related waterbody scouring at waterbody crossing locations.
4. The Supplemental EIS should analyze increased risk to the pipeline and to spill response due to climate change.
5. The Supplemental EIS should provide an assessment of the safety risks associated with diluted bitumen pipelines, including the adequacy of proposed construction materials and the effects of higher internal temperature and corrosion rates.
6. The Department committed to commission an independent consultant to review the risk assessment for the Keystone XL Project, which would include, but not be limited to, an assessment of valve placement and the possibility of deploying external leak detection systems in areas of particularly sensitive environmental resources.

7. Pipeline companies do not have a good record of rapidly and effectively responding to spills, nor does the proposed Project include adequate provisions to detect, prevent, and clean up spills of diluted bitumen.
8. The Integrity Management Plan and the Emergency Response Plan for the proposed Project should be reviewed to ensure that they fully comply with federal law.
9. The Supplemental EIS should investigate mitigation and spill response measures such as bioremediation.
10. Spills could result in potential economic costs such as reduced property value, reduced agricultural production, and job losses in the agriculture, tourism, and other related sectors.
11. Who is liable for damage caused by pipeline spills?
12. The assumption that Pipeline and Hazardous Materials Safety Administration (PHMSA) oversight of the proposed Project and Project-specific PHMSA conditions are adequate and sufficient to protect water resources from spills is flawed.

2.1.12 Cumulative Impacts

1. The Supplemental EIS should evaluate the impacts of the proposed Keystone XL Project and the Gulf Coast segment of the proposed Project together.
2. The Supplemental EIS should study the economic impact of increased crude oil and wholesale fuel prices.
3. The Supplemental EIS should consider the cumulative effects of other existing or planned pipelines and their ancillary facilities.
4. The Supplemental EIS should include an analysis of the trans-boundary impacts associated with tar sands development in Canada, including regulatory considerations in Canada.
5. The Final EIS conclusion that production levels of tar sands would not be affected by whether or not the Keystone XL Project is built remains flawed.
6. Speculating on the potential for future projects that would displace similar impacts from the proposed Project is contrary to NEPA and impermissibly narrows the scope of the Supplemental EIS analysis by excluding consideration of trans-boundary, indirect, and cumulative impacts.
7. The Supplemental EIS review should consider the global/geographic context, including climate change.
8. The Supplemental EIS should examine impacts (including wildlife, threatened and endangered species, and environmental justice) both in the United States and Canada, pursuant to international treaties.
9. The Supplemental EIS should evaluate the impacts of process water demand for oil sands mining (four to six barrels of water to produce one barrel of oil sands) and contamination of that water.

2.1.13 Alternatives

1. The Supplemental EIS should fully analyze reasonable alternatives to the proposed Project, including alternative routes and the no-action alternative, including identifying existing pipelines with available capacity and the markets they already serve.
2. The Supplemental EIS should analyze alternative routes that avoid risks to homes, farming operations, and wells and springs used by rural residents, livestock, and wildlife.
3. The Supplemental EIS should identify and analyze routes that avoid the NDEQ-identified Sand Hills Region in Nebraska.
4. The Supplemental EIS should evaluate an alternative route to avoid the sovereign Lakota territory encompassed by the boundaries of the Great Sioux Reservation as identified in the 1851 and 1868 Fort Laramie Treaties.
5. The Supplemental EIS should evaluate an alternative route to avoid the easements for the Mni Wiconi Water Project.
6. The alternatives analysis in the Supplemental EIS should examine how the infrastructure choice to build the proposed Project would compare to other infrastructure alternatives that would favor lower carbon impacts.
7. The Supplemental EIS should evaluate existing and proposed transportation options available to move oil sands and Bakken crude oil to market, including pipeline and rail capacity.
8. The Supplemental EIS should evaluate options to refine oil sands crude in Canada, and/or transport raw or refined products to market via Canadian ports and territory, without a pipeline crossing into the United States.

2.1.14 EIS Process

Includes comments about both the Supplemental EIS and the Final EIS.

1. The Final EIS was flawed and contained inadequate information. It should not be used as a baseline for the Supplemental EIS due to those flaws and due to changes in the proposed Project.
2. Provide enough information to raise the EPA-issued rating of EO-2 (Environmental Objections-Insufficient Information) for the EIS.
3. The Department should work with appropriate international, federal, and state agencies, and tribes to develop plans and procedures necessary to comply with the ESA/MBTA and to protect wildlife, vegetation, habitat, and other resources.
4. Previous comments submitted on the Draft EIS and Final EIS that were not addressed need to be considered and incorporated into the scope of the Supplemental EIS.
5. Due to the proposed Project's complexity and lack of clear communication with the public so far, the Supplemental EIS must allow adequate time and opportunity for public review and involvement.
6. NEPA requires a "full and fair" analysis and disclosure of all alternatives, mitigation measures, and potential impacts related to the proposed Project, including the significance

of all direct, indirect, and cumulative effects, prior to commencement of the proposed Project.

7. Federal agencies must comply with NEPA, environmental laws, and CFR Title 40, but have failed to do so in the past. Other agencies or contractors contributing to the proposed Project must be qualified and adequately vetted.
8. The Department must properly consult with tribes to address their concerns, engage in official consultation, protect tribal resources, and consider tribal agencies' involvement as cooperating agencies. This should include a new round of consultation for the Supplemental EIS.
9. A new NID must be completed, and supporting information/criteria for the NID should be made transparently available to the public and included in the Supplemental EIS.
10. Keystone has used eminent domain (as a common carrier) to acquire land for the Gulf Coast segment, often over landowner objections. This is inappropriate and should not be allowed for the proposed Project.
11. The information collected and the subsequent evaluation from the Final EIS should be used for the Supplemental EIS; the review process should not be started over.
12. A Health Impact Assessment should be conducted prior to the Final Supplemental EIS.

2.1.15 Climate

1. The Supplemental EIS should evaluate the proposed Project's impact on climate change, specifically the way in which the project enables the processing and consumption of bitumen and impacts to Canada's boreal forests.
2. The Supplemental EIS should include a lifecycle analysis of GHG emissions throughout the proposed Project's entire life, including development, processing, and consumption of bitumen resources, which should be treated as contingent on (and resultant from) the proposed Project.
3. The Supplemental EIS must fully consider the impact of the current drought on pipeline construction and operational impacts, including the increased risk of wildfires caused by construction, increased soil temperatures over the pipeline, increased risk of soil subsidence and instability, and the much greater difficulty of revegetating the pipeline right-of-way in drought conditions.
4. The Supplemental EIS should consider the global climate impacts of the bifurcation of the northern and southern segments of the Keystone XL Project.
5. The Supplemental EIS should consider the impacts of future climate change, particularly increased rainfall and potential flooding, and higher temperatures, on the proposed Project's design (e.g., deeper river crossings, appropriate spill response capabilities, physical and chemical impacts of higher temperatures).
6. The Supplemental EIS should include a discussion of existing conditions in the areas that will be affected by the proposed Project, including how those conditions will change during its 50-year projected lifespan from the intensifying impacts of climate change as required by 40 CFR 1502.15.

7. The Supplemental EIS should include a discussion of the impact of the proposed Project on broader foreign policy objectives, including a comprehensive strategy to address climate change.
8. The Supplemental EIS should use and disclose the most relevant science on climate change and the scientific prescription for climate recovery.

2.2 AGENCY COMMENT LETTERS

The Department received a letter from the United States Department of the Interior, Office of the Secretary, Office of Environmental Policy and Compliance, dated July 30, 2012. No other letters or emails were received from state and/or federal agencies. The Department of the Interior letter speaks on behalf of Department of the Interior component agencies, including the USFWS, NPS, and BLM. Detailed comments within the Department of the Interior letter are included in the summary presented above in Section 2.1, Public, Agency, and Stakeholder Comments.

3.0 ACRONYMS

BLM U.S. Bureau of Land Management
ESA Endangered Species Act
GHG greenhouse gas
MBTA Migratory Bird Treaty Act
NEPA National Environmental Policy Act
NGO nongovernmental organization
NID National Interest Determination
NOI Notice of Intent
NPS National Park Service
PHMSA Pipeline and Hazardous Materials Safety Administration
SDGFP South Dakota Game, Fish, and Parks
USFWS U.S. Fish and Wildlife Service

-This page intentionally left blank-

APPENDIX G

Construction, Mitigation, and Reclamation Plan

-This page intentionally left blank-

KEYSTONE XL PROJECT

CONSTRUCTION, MITIGATION, AND RECLAMATION PLAN

April 2012
Rev. 4

-This page intentionally left blank-

1.0 INTRODUCTION

2.0 GENERAL CONDITIONS
- 2.1 Training
- 2.2 Environmental Inspection
- 2.3 Advance Notice of Access to Property Prior to Construction
- 2.4 Other Notifications
- 2.5 Damages to Private Property
- 2.6 Appearance of Worksite
- 2.7 Access
- 2.8 Aboveground Facilities
- 2.9 Minimum Depth of Cover
- 2.10 Non-Hazardous Waste Disposal
- 2.11 Hazardous Wastes
- 2.12 Noise Control
- 2.13 Weed Control
- 2.14 Dust Control
- 2.15 Off Road Vehicle Control
- 2.16 Fire Prevention and Control
- 2.17 Road and Railroad Crossings
- 2.18 Adverse Weather
- 2.19 Cultural Resources

3.0 SPILL PREVENTION AND CONTAINMENT
- 3.1 Spill Prevention
  - 3.1.1 Staging Area
  - 3.1.2 Construction Right of Way
- 3.2 Contingency Plans
- 3.3 Equipment
- 3.4 Emergency Notification
- 3.5 Spill Containment and Countermeasures

4.0 UPLANDS (AGRICULTURAL, FOREST, PASTURE, RANGE AND GRASS LANDS)
- 4.1 Interference with Irrigation Systems
- 4.2 Clearing
- 4.3 Topsoil Removal and Storage
- 4.4 Grading
- 4.5 Temporary Erosion and Sediment Control
  - 4.5.1 General
  - 4.5.2 Sediment Barriers
  - 4.5.3 Trench Plugs
  - 4.5.4 Temporary Slope Breakers (Water Bars)
  - 4.5.5 Drainage Channels or Ditches
  - 4.5.6 Temporary Mulching
  - 4.5.7 Tackifier
- 4.6 Stringing

4.7 Trenching
4.7.1 Trench Dewater/Well Points
4.8 Welding, Field Joint Coating, and Lowering In
4.9 Padding and Backfilling
4.10 Clean Up
4.11 Reclamation and Revegetation
4.11.1 Relieving Compaction
4.11.2 Rock Removal
4.11.3 Soil Additives
4.11.4 Seeding
4.11.5 Permanent Erosion and Sediment Control
4.11.6 Fences
4.11.7 Farm Terraces
4.11.8 Right-of-Way and Pipeline Markers
4.12 Pasture and Range Lands
4.13 Forested Lands
4.14 Residential and Commercial/Industrial Areas
4.14.1 Residential and Commercial Areas
4.14.2 Site – Specific Plans
4.14.3 Landowner Complaint Resolution Procedure
4.15 Fragile Soil Clean Up and Reclamation/Revegetation
4.15.1 General
4.15.2 Right-of-Way Construction
4.15.3 Right-of-Way Reclamation
4.15.4 Post - Construction
4.16 Operations and Maintenance

5.0 DRAIN TILE SYSTEMS
5.1 General
5.2 Identification and Classification of Drain Tile Systems
5.2.1 Publicly Owned Drain Tiles
5.2.2 Privately Owned Drain Tiles
5.3 Mitigation of Damage to Drain Tile Systems
5.3.1 Non-interference with Drain Tile
5.3.2 Non-disturbance of Drain Tile Mains
5.3.3 Relocation or Replacement of Existing Drain Tiles Prior to Construction
5.3.4 Future Drain Tiles/Systems
5.3.5 Other Mitigation Measures
5.4 Responsibility for Repair of Drain Tile Systems
5.4.1 Local Drain Tile Contractor Repair
5.4.2 Pipeline Contractor Repair
5.4.3 Landowner/Tenant Repair
5.5 Drain Tile Repairs
5.5.1 Temporary Repairs During Construction
5.5.2 Permanent Repairs
5.6 Inspection/Acceptance of Drain Tile Repairs

6.0 WETLAND CROSSINGS
- 6.1 General
- 6.2 Easement and Workspace
- 6.3 Vehicle Access and Equipment Crossing
- 6.4 Temporary Erosion and Sediment Control
- 6.5 Wetland Crossing Procedures
  - 6.5.1 Dry Wetland Crossing Method
  - 6.5.2 Standard Wetland Crossing Method
  - 6.5.3 Flooded Push/Pull Wetland Crossing Method
- 6.6 Restoration and Reclamation

7.0 WATERBODIES AND RIPARIAN LANDS
- 7.1 General
- 7.2 Easement and Workspace
- 7.3 Vehicle Access and Equipment Crossings
- 7.4 Waterbody Crossing Methods
  - 7.4.1 Non-flowing Open Cut Crossing Method
  - 7.4.2 Flowing Open Cut Crossing Method of Minor, Intermediate, and Major Waterbodies
  - 7.4.3 Flowing Stream Crossing – Dry Flume Method
  - 7.4.4 Flowing Stream Crossing – Dry Dam and Pump Method
  - 7.4.5 Horizontal Directional Drill Crossings
  - 7.4.6 Horizontal Bore Crossings
- 7.5 Clearing
- 7.6 Grading
- 7.7 Temporary Erosion and Sediment Control
- 7.8 Trenching
- 7.9 Pipe Installation
- 7.10 Backfilling
- 7.11 Stabilization and Restoration of Stream Banks and Slopes

8.0 HYDROSTATIC TESTING
- 8.1 Testing Equipment Location
- 8.2 Test Water Source and Discharge Locations
- 8.3 Filling the Pipeline
- 8.4 Dewatering the Pipeline
  - 8.4.1 Splash Pup
  - 8.4.2 Splash Plate
  - 8.4.3 Plastic Liner
  - 8.4.4 Straw Bale Dewatering Structure

9.0 DRAWINGS AND FIGURES

Detail 1	Typical Silt Fence Barrier
Detail 2	Typical Straw or Hay Bale Barrier
Detail 3	Temporary/Permanent Slope Breaker Detail (Water Bars)
Detail 4	Erosion Control Matting Installation
Detail 5	Typical Dewatering Filter Bag
Detail 6	Typical Straw Bale Dewatering Structure
Detail 7	Typical Permanent Trench Breaker
Detail 8	”Dry” Wetland Crossing Method
Detail 9	Standard Wetland Crossing Method
Detail 10	Push/Pull Wetland Crossing Method
Detail 11	Typical Open Cut Wet Crossing Method Non-Flowing Waterbody
Detail 12	Typical Open Cut Wet Crossing Method Flowing Waterbody
Detail 13	Typical Dry Flume Crossing Method
Detail 13a	Typical Dry Flume Crossing Method (Procedures)
Detail 14	Typical Dam and Pump Crossing
Detail 14a	Typical Dam and Pump Crossing (Procedures)
Detail 15	Typical Horizontal Drill (HDD) Site Plan & Profile
Detail 16	Typical Temporary Bridge Crossing
Detail 17	Typical Flume Bridge Crossing
Detail 18	Typical Railcar Bridge Crossing
Detail 19	Flexible Channel Liner Installation
Detail 20	Typical Rock Rip-Rap
Detail 21	Typical Uncased/Railroad Crossing Bore Detail
Deail 22	(Omitted)
Detail 23	Streambank Reclamation – Log Wall
Detail 24	Streambank Reclamation – Vegetated Geotextile Installation
Detail 25	Typical ROW Layout/Soil Handling 110’ Construction ROW 50’ Easement Drain Tile Crossing
Detail 26	Header/Main Crossovers of Pipeline
Detail 27	Relocate/Replace Drainage Header/Main
Detail 28	Drainage and Irrigation Temporary Drain Tile Repair
Detail 29	Drainage and Irrigation Permanent Drain Tile Repair
Detail 30	Equipment Cleaning Station Detail
Detail 31	Equipment Wash Station Detail
Detail 67/67A	Topsoil Conservation—Triple Ditch

1.0 INTRODUCTION

The construction, mitigation, and reclamation requirements described in this Plan apply to work on all of TransCanada Keystone Pipeline, L.P.'s (Keystone's) Keystone XL Project (Project) lands, including the following;

- uplands, including agricultural (cultivated or capable of being cultivated) lands, pasture lands; range lands; grass lands; forested lands; lands in residential, commercial, or industrial areas; lands in public rights of way; and lands in private rights-of-way;
- wetlands; and
- waterbodies and riparian areas.

Keystone, during the construction, operation, and maintenance of the Project, shall implement the construction, mitigation, and reclamation actions contained in this Plan to the extent that they do not conflict with the requirements of any applicable federal, state, or local rules and regulations, or other permits or approvals that are applicable to the Project. Additionally, Keystone may deviate from specific requirements of this Plan on specific private lands as agreed to by landowners or as required to suit actual site conditions as determined and directed by Keystone. All work must be in compliance with federal, state, and local permits.

The Project will be designed, constructed, operated and maintained in a manner that meets or exceeds applicable industry standards and regulatory requirements. Keystone's Integrity Management Plan and Emergency Response Plan outlines the preventative maintenance, inspection, line patrol, leak detection systems, SCADA, and other pipeline integrity management procedures to be implemented during operation of the Project.

2.0 GENERAL CONDITIONS

2.1 Training

Experienced, well-trained personnel are essential for the successful implementation of this Plan. Keystone and its Contractors shall undergo prevention and response, as well as safety training. The program shall be designed to improve awareness of safety requirements, pollution control laws and procedures, and proper operation and maintenance of equipment.

The construction contractor (Contractor), and all of his subcontractors shall ensure that persons engaged in Project construction are informed of the construction issues and concerns and that they attend and receive training regarding these requirements as well as all laws, rules and regulations applicable to the work. Prior to construction, all Project personnel will be trained on environmental permit requirements and environmental specifications, including fuel handling and storage, cultural resource protection methods, stream and wetland crossing requirements, and sensitive species protection measures.

Different levels of training shall be required for different groups of Contractor personnel. Contractor supervisors, managers, field foremen, and other Contractor personnel designated by Keystone shall attend a comprehensive environmental training session. All other Contractor personnel shall attend a training session before the beginning of construction and during construction as environmental issues and incidents warrant. Additional training sessions shall be held for newly assigned personnel prior to commencing work on the Project.

All Contractor personnel shall attend the training session prior to entering the construction right-of-way. All Contractor personnel shall sign an acknowledgement of having attended the appropriate level of training and shall display a hard hat sticker that signifies attendance at environmental training. In order to ensure successful compliance, Contractor personnel shall attend repeat or supplemental training if compliance is not satisfactory or as new, significant new issues arise.

All visitors and any other personnel without specific work assignments shall be required to attend a safety and environmental awareness orientation.

2.2 Environmental Inspection

Keystone will use Environmental Inspectors on each construction spread. The Environmental Inspectors will review the Project activities daily for compliance with state, federal and local regulatory requirements. The Environmental Inspectors will have the authority to stop specific tasks as approved by the Chief Inspector. They can also order corrective action in the event that construction activities violate the provisions of this Plan, landowner requirements, or any applicable permit requirements.

2.3 Advance Notice of Access to Property Prior to Construction

Prior to initially accessing landowners' property, Keystone shall provide the landowner or tenant with a minimum of 24 hours prior notice unless otherwise negotiated with the landowner and as described in the Project line list). Additionally, the landowner or tenant shall be provided with Keystone contact information. Landowners may utilize contact information to inform Keystone of any concerns related to construction.

Prior notice shall consist of a personal contact, a telephone contact, or delivery of written notice to the landowner to inform the landowner of whereby the landowner or tenant is informed of Keystone's intent to initially access the land. The landowner or tenant need not acknowledge receipt of written notice before Keystone can enter the landowner's property.

Keystone will coordinate with managers of public lands to reduce conflicts between construction activities and recreational uses. Keystone will consult with land managers on state and federal lands regarding any necessary construction and maintenance restrictions consistent with management and use of such lands. Damages from disruption of recreational uses of private lands will be the subject of compensation negotiations with individual landowners.

If pipeline activities occur during the winter season Keystone will consult with the appropriate regulatory agencies to establish the appropriate protective measures to avoid or mitigate wildlife seasonal, timing or migration concerns.

2.4 Other Notifications

The Contractor shall notify, in writing, both Keystone and the authority having jurisdiction over any road, railroad, canal, drainage ditch, river, foreign pipeline, or other utility to be crossed by the pipeline at least 48 hours (excluding Saturdays, Sundays, and statutory holidays), or as specified on the applicable permit(s), prior to commencement of pipeline construction, in order that the said authority may appoint an inspector to ensure that the crossing is constructed in a satisfactory manner.

The Contractor shall notify Keystone immediately of any spill of a potentially hazardous substance that creates a sheen on a wetland or waterbody, as well as any existing soil contamination discovered during construction.

The Contractor shall immediately notify Keystone of the discovery of previously unreported historic property, other significant cultural materials, or suspected human remains uncovered during pipeline construction.

The Contractor shall immediately notify Keystone of a Project-related injury to or mortality of a threatened or endangered animal.

2.5 Damages to Private Property

Pipeline construction activities shall be confined to the construction right-of-way, temporary work space, additional temporary work space, and approved access routes.

Keystone shall reasonably compensate landowners for any construction-related damages caused by Keystone which occur on or off of the established pipeline construction right-of-way.

Keystone shall reasonably compensate landowners for damages to private property caused by Keystone beyond the initial construction and reclamation of the pipeline, to include those damages caused by Keystone during future construction, operation, maintenance, and repairs relating to the pipeline.

2.6 Appearance of Worksite

The construction right-of-way shall be maintained in a clean, neat condition at all times. At no time shall litter be allowed to accumulate at any location on the construction right-of-way. The Contractor shall provide a daily garbage detail with each major construction crew to keep the construction right-of-way clear of trash, pipe banding and spacers, waste from coating products, welding rods, timber skids, defective materials and all construction and other debris immediately behind construction operations unless otherwise approved by Keystone. Paper from wrapping or coating products or lightweight items shall not be permitted to be scattered by the wind.

The traveled surfaces of roads, streets, highways, etc. (and railroads when applicable) shall be cleaned free of mud, dirt, or any debris deposited by equipment traversing these roads or exiting from the construction right-of-way.

2.7 Access

Prior to the pipeline's installation, Keystone and the landowner shall reach a mutually acceptable agreement on the route that shall be utilized by the Contractor for entering and exiting the pipeline construction right-of-way should access to the construction right-of-way not be practicable or feasible from adjacent segments of the pipeline construction right-of-way, public road, or railroad right-of-way.

All construction vehicles and equipment traffic shall be confined to the public roads, private roads acquired for use by Keystone, and the construction right-of-way. If temporary private access roads are constructed, they shall be designed to maintain proper drainage and shall be built to minimize soil erosion.

Sufficiently sized gaps shall be left in all spoil and topsoil wind rows and a hard or soft plug shall be left in the trench at all temporary private access roads and obvious livestock or wildlife trails unless the landowner agrees prior to construction that these access points can be blocked during construction.

All construction-related private roads and access points to the right-of-way shall be marked with signs. Any private roads not to be utilized during construction shall also be marked.

2.8 Aboveground Facilities

Locations for aboveground facilities shall be selected in a manner so as to be as unobtrusive as reasonably possible to ongoing agricultural or other landowner activities occurring on the lands adjacent to the facilities. If it is not feasible, to avoid interference, such activities shall be located so as to incur the least hindrance to the adjacent agricultural operations (i.e., located in field corners or areas where at least one side is not used for cropping purposes) provided the location is consistent with the design constraints of the pipeline. Aboveground facilities shall avoid floodplains and wetlands to the maximum extent possible. Additionally, they shall be located to avoid existing drain tile systems to the extent possible. To further reduce visual impacts from aboveground pipeline facilities and structures, Keystone will comply with standard industry painting practices with respect to aboveground facilities. Keystone will address any visual aesthetics issues with landowners in individual consultations.

2.9 Minimum Depth of Cover

The pipeline shall be installed so that the top of the pipe and coating is a minimum depth of 5 feet below the bottom of waterbodies including rivers, creeks, streams, ditches, and drains. This depth shall normally be maintained

over a distance of 15 feet on each side of the waterbody measured from the top of the defined stream channel. If concrete weights or concrete coated pipe is utilized for negative buoyancy of the pipeline, the minimum depth of cover shall be measured from the top of the concrete to the original ground contour. The following table indicates standard depths that would apply to pipeline construction.

Location	Normal Excavation (inches)	For Rock Excavation (inches
Most areas	48	36
All waterbodies	60	36
Dry creeks, ditches, drains, washes, gullies, etc.	60	36
Drainage ditches at public roads and railroads	60	48

Depth of cover requirements may be modified by Keystone based on site-specific conditions. However, all depths shall be in compliance with all established codes.

2.10 Non-Hazardous Waste Disposal

Non-hazardous pipeline construction wastes include human waste, trash, pipe banding and spacers, waste from coating products, welding rods, timber skids, cleared vegetation, stumps, and rock.

All waste which contains (or at any time contained) oil, grease, solvents, or other petroleum products falls within the scope of the oil and hazardous substances control, cleanup, and disposal procedures. This material shall be segregated for handling and disposal as hazardous wastes.

The Contractor shall be responsible for ensuring that human wastes are handled and disposed of exclusively by means of portable, self-contained toilets during all construction operations. Wastes from these units shall be collected by a licensed contractor for disposal only at licensed and approved facilities.

The Contractor shall remove all trash from the construction right-of-way on a daily basis unless otherwise approved or directed by Keystone.

The Contractor shall dispose of HDD drill cuttings and drilling mud at a Keystone-approved location. Disposal options may include spreading over the construction right-of-way in an upland location approved by Keystone, or hauling to an approved licensed landfill or other site approved by Keystone.

The Contractor shall remove all extraneous vegetative, rock, and other natural debris from the construction right-of-way by the completion of cleanup

The Contractor shall remove all trash and wastes from Contractor yards, and Pipe Stockpipe Sites, and staging areas when work is completed at each location.

The Contractor shall dispose of all waste materials at licensed waste disposal facilities. Wastes shall not be disposed of in any other fashion such as un-permitted burying or burning.

2.11 Hazardous Wastes

The Contractor shall ensure that all hazardous and potentially hazardous materials are transported, stored, and handled in accordance with all applicable legislation. Workers exposed to or required to handle dangerous materials shall be trained in accordance with the applicable regulator and the manufacturer's recommendations.

The Contractor shall dispose of all hazardous materials at licensed waste disposal facilities. Hazardous wastes shall not be disposed of in any other fashion such as un-permitted burying or burning.

All transporters of oil, hazardous substances, and hazardous wastes shall be licensed and certified according to the applicable state vehicle code. Incidents on public highways shall be reported to the appropriate agencies.

All hazardous wastes being transported off-site shall be manifested. The manifest shall conform to requirements of the appropriate state agency. The transporter shall be licensed and certified to handle hazardous wastes on the public highways. The vehicles as well as the drivers must conform to all applicable vehicle codes for transporting hazardous wastes. The manifest shall conform to 49 CFR Parts 172.101, 172.202, and 172.203.

If toxic or hazardous waste materials or containers are encountered during construction, the Contractor shall stop work immediately to prevent disturbing or further disturbing the waste material and shall immediately notify Keystone. The Contractor shall not restart work until clearance is granted by Keystone.

2.12 Noise Control

The Contractor shall minimize noise during non-daylight hours and within 1 mile of residences or other noise-sensitive areas such as hospitals, motels or campgrounds. Keystone shall abide by all applicable noise regulations regarding noise near residential and commercial/industrial areas. The Contractor shall provide notice to Keystone if noise levels are expected to exceed bylaws for a short duration. Keystone will give advanced notice to landowners within 500 feet of right-of-way prior to construction, limit the hours during which construction activities with high-decibel noise levels are conducted, coordinate work schedules, and ensure that construction proceeds quickly through such areas. The Contractor shall minimize noise in the immediate vicinity of herds of livestock or poultry operations, which are particularly sensitive to noise.

Keystone will set up a toll-free telephone line for landowners to report any construction noise-related issues.

2.13 Weed Control

Keystone will prepare a weed management plan for each state crossed by the project, as required. In general, these plans will consider the following measures listed below.

Prior to mobilization for the Project, the Contractor shall thoroughly clean all construction equipment, including timber mats, prior to moving the equipment to the job site to limit the potential for the spread of noxious weeds, insects and soil-borne pests. The Contractor shall clean the equipment with high-pressure washing equipment.

Prior to construction, Keystone will mark all areas of the right-of-way which contain infestations of noxious, invasive species or soil-borne pests. Such marking will clearly indicate the limits of the infestation along the right-of-way. During construction, the Contractor shall clean the tracks, tires, and blades of equipment by hand (track shovel) or compressed air to remove excess soil prior to movement of equipment out of weed or soil-borne pest infested areas, or utilize cleaning stations to remove vegetative materials using water under high pressure (see detail Drawings 30 and 31).

In areas of isolated weed populations, the Contractor shall strip topsoil from the full width of the construction right-of-way and store the topsoil separately from other topsoil and subsoil. The Environmental Inspectors will identify these locations in the field prior to grading activities.

The Contractor shall use mulch and straw or hay bales that are free of noxious weeds for temporary erosion and sediment control.

The Contractor shall implement pre-construction treatments such as mowing prior to seed development or herbicide application to areas of noxious weed infestation prior to other clearing, grading, trenching, or other soil disturbing work at locations identified in the construction drawings.

Keystone will implement Best Management Practices (BMPs) for conducting vegetation control where necessary before and after construction. Typical agricultural herbicides, developed in consultation with county or state regulatory agencies, will be used. Herbicide types will be determined based on the weed species requiring control. The Contractor shall apply herbicides, where required, within one week, or as deemed necessary for optimum mortality success, prior to disturbing the area by clearing, grading, trenching, or other soil disturbing work. Herbicides shall be applied by applicators appropriately licensed or certified by the state in which the work is conducted. All herbicides applied prior to construction shall be non-residual or shall have a significant residual effect no longer than 30 days. Herbicides applied during construction shall be non-residual. Keystone will implement BMPs in the use of pesticides and herbicides along the pipeline corridor to reduce potential impacts to avian and wildlife species.

The Contractor shall not use herbicides in or within 100 feet of a wetland or waterbody.

After pipeline construction, on any construction right-of-way over which Keystone will retain control over the surface use of the land after construction (i.e., valve sites, metering stations, pump stations, etc.), Keystone shall provide for weed control to limit the potential for the spread of weeds onto adjacent lands used for agricultural purposes. Any weed control spraying performed by Keystone shall be done by a state-licensed pesticide applicator.

Keystone shall be responsible for reimbursing all reasonable costs incurred by owners of land adjacent to aboveground facilities when the landowners must control weeds on their land which can be reasonably determined to have spread from land occupied by Keystone's aboveground facilities.

2.14 Dust Control

The Contractor shall at all-time control airborne dust levels during construction activities to levels acceptable to Keystone. The Contractor shall employ water trucks, sprinklers or calcium chloride as necessary to reduce dust to acceptable levels. Utilization of calcium chloride is limited to roads.

Dust shall be strictly controlled where the work approaches dwellings, farm buildings, and other areas occupied by people and when the pipeline parallels an existing road or highway. This shall also apply to access roads where dust raised by construction vehicles may irritate or inconvenience local residents. The speed of all Contractor vehicles shall be controlled in these areas. Emissions from construction equipment combustion, open burning, and temporary fuel transfer systems and associated tanks will be controlled to the extent required by state and local agencies through the permit process.

The Contractor shall take appropriate precautions to prevent fugitive emissions caused by sand blasting from reaching any residence or public building. The Contractor shall place curtains of suitable material, as necessary, to prevent wind-blown particles from sand blasting operations from reaching any residence or public building.

Additional measures may be required by state regulations or local ordinances. The Contractor will comply with all applicable state regulations and local ordinances with respect to truck transportation and fugitive dust emissions.

2.15 Off Road Vehicle Control

Keystone shall offer to landowners or managers of forested lands to install and maintain measures to control unauthorized vehicle access to the construction right-of-way where appropriate. These measures may include the following unless otherwise approved or directed by Keystone based on site specific conditions or circumstances:

- signs;
- fences with locking gates;
- slash and timber barriers, pipe barriers, or boulders lined across the

construction right-of-way; and

- conifers or other appropriate trees or shrubs across the construction right-of-way.

2.16 Fire Prevention and Control

The Contractor shall comply with all federal, state, county and local fire regulations pertaining to burning permits and the prevention of uncontrolled fires. The following mitigative measures shall be implemented to prevent fire hazards and control of fires:

- A list of relevant fire authorities and their designated representative to contact shall be maintained on site by construction personnel.
- Adequate firefighting equipment shall be available on site in accordance with the applicable regulatory requirements shall be available on site.
- The level of forest fire hazard shall be posted at the construction office (where visible for workers) and workers shall be made aware of the hazard level and related implications.
- The Contractor shall provide equipment to handle any possible fire emergency. This shall include, although not be limited to, water trucks; portable water pumps; chemical fire extinguishers; hand tools such as shovels, axes, and chain saws; and heavy equipment adequate for the construction of fire breaks when needed.
- Specifically, the Contractor shall supply and maintain in working order an adequate supply of fire extinguishers for each crew engaged in potentially combustible work such as welding, cutting, grinding, and burning of brush or vegetative debris.
- In the event of a fire, the Contractor shall immediately use resources necessary to contain the fire. The Contractor shall then notify local emergency response personnel.
- All tree clearing activities are to be carried out in accordance with local rules and regulations for the prevention of forest fires.
- Burning shall be done in compliance with state, county, or local applicable regulations.
- Any burning will be done within the right-of-way. Only small piles shall be burned to avoid overheating or damage to trees or other structures along the right-of-way.
- Flammable wastes shall be removed from the construction site on a regular basis.
- Flammable materials kept on the construction site must be stored in approved containers away from ignition sources.
- Smoking shall be prohibited around flammable materials.
- Smoking shall be prohibited on the entire construction site when the fire hazard is high.

2.17 Road and Railroad Crossings

Construction across paved roads, highways, and railroads will be in accordance with the requirements of the road and railroad crossing permits and approvals obtained by Keystone. In general, all major paved roads, all primary gravel roads, highways, and railroads will be crossed by boring beneath the road or railroad. Detail drawing 21 illustrates a typical bored road or railroad crossing. Boring requires the excavation of a pit on each side of the feature, the placement of boring equipment in the pit, and boring a hole under the road at least equal to the diameter of the pipe. For long crossings, sections can be welded onto the pipe string just before being pulled through the borehole. Boring will result in minimal or no disruption to traffic at road or railroad crossings. Each boring will be expected to take 1 to 2 days for most roads and railroads and up to 10 days for long crossings such as interstate or four-lane highways.

Most smaller, unpaved roads and driveways will be crossed using the open-cut method where permitted by local authorities or private owners. The open-cut method will require temporary closure of the road to traffic and establishment of detours. If no reasonable detour is feasible, at least one lane of traffic will be kept open, except during brief periods when it is essential to close the road to install the pipeline. Most open-cut road crossings can be finished and the road resurfaced in 1 or 2 days. Keystone will take measures, such as posting signs at open-cut road crossings, to ensure safety and minimize traffic disruptions.

2.18 Adverse Weather

The Contractor shall restrict certain construction activities and work in cultivated agricultural areas in excessively wet soil conditions to minimize rutting and soil compaction. In determining when or where construction activities should be restricted or suspended during wet conditions, the Contractor shall consider the following factors:

- the extent that rutting may cause mixing of topsoil with subsoil layers or damage to tile drains;
- excessive buildup of mud on tires and cleats;
- excessive ponding of water at the soil surface; and
- the potential for excessive soil compaction.

The Contractor shall implement mitigative measures as directed by Keystone in order to minimize rutting and soil compaction in excessively wet soil conditions which may include:

- restricting work to areas on the spread where conditions allow;
- using low ground weight, wide-track equipment, or other low impact construction techniques;
- limiting work to areas that have adequately drained soils or have a cover of vegetation ,such as sod, crops or crop residues, sufficient to prevent mixing of topsoil with subsoil layers or damage to drain tiles; and

- installing geotextile material or construction mats in problem areas.

"Stop work" authority will be designated to the chief inspector but will be implemented when recommended by the Environmental Inspector.

2.19 Cultural Resources

Keystone intends to avoid cultural resources to the extent practicable by rerouting the pipeline corridor and related appurtenances, avoiding construction activities on properties listed in or eligible for listing in the National Register of Historic Places (NRHP), as well as boring or using HDD through culturally sterile soils.

The Contractor shall implement the measures outlined in any unanticipated discovery plan or any Programmatic Agreement that is adopted to minimize disturbance to cultural sites and shall take immediate action as outlined in the Programmatic Agreement if any unanticipated cultural discovery is encountered during construction.

The preferred treatment of any historical property or culturally significant site is avoidance. Where required, Keystone will monitor the construction spread using a cultural resource monitor working under the direction of a professional who meets the standards of the *Secretary of the Interior's Historic Preservation Professional Qualification Standards* (48 FR 44716, September 29, 1983).

Prior to commencing construction, Keystone also will provide an appropriate level of training to all construction personnel so that the requirements of any unanticipated discovery plan or Programmatic Agreement are understood and unanticipated discoveries quickly identified.

In the event an unanticipated cultural discovery is made, the Contractor will immediately halt all construction activities within a 100-foot radius, including traffic; notify the Keystone Environmental Inspector; and implement interim measures to protect the discovery from looting or vandalism. The appropriate federal, state, local, or tribal authorities will be notified of discovery within 48 hours of the initial find. Construction will not proceed within the 100-foot radius of discovery site until all mitigation measures defined in the Programmatic Agreement are concluded and Keystone receives approval from the appropriate agencies that construction may resume. No work or activity within the 100-foot buffer area may take place until approvals are communicated at the spread level by the lead Environmental Inspector.

3.0 SPILL PREVENTION AND CONTAINMENT

Spill prevention and containment applies to the use and management of hazardous materials on the construction right-of-way and all ancillary areas during construction. This includes the refueling or servicing of all equipment with diesel fuel, gasoline, lubricating oils, grease, and hydraulic and other fluids during normal upland applications and special applications within 100 feet of perennial streams or wetlands.

Keystone will prepare a project-specific Spill Prevention Containment and Countermeasure (SPCC) Plan. The Contractor shall provide additional information to complete the SPCC Plan for each construction spread, and shall provide site-specific data that meets the requirements of 40 CFR Part 112 for every location used for staging fuel or oil storage tanks and for every location used for bulk fuel or oil transfer. Each SPCC Plan will be prepared prior to introducing the subject fuel, oil, or hazardous material to the subject location.

3.1 Spill Prevention

3.1.1 Staging Areas

Staging areas (including Contractor yards and pipe stockpile sites) shall be set up for each construction spread. Bulk fuel and storage tanks will be placed only at Contractor yards. No bulk fuel and storage tanks will be placed in the construction ROW. Hazardous materials at staging areas shall be stored in compliance with federal and state laws. The following spill prevention measures shall be implemented by the Contractor:

- Contractor fuel trucks shall be loaded at existing bulk fuel dealerships or from bulk tanks set up for that purpose at the staging area. In the former case, the bulk dealer is responsible for preventing and controlling spills.
- The Environmental Inspector shall inspect the tank site for compliance with the 100-foot setback requirement and approve the tank site prior to installing bulk fuel or storage tanks on the construction yard.
- Fuels and lubricants shall be stored only at designated staging areas. Storage of fuel and lubricants in the staging area shall be at least 100 feet away from the water's edge. Refueling and lubrication of equipment shall be restricted to upland areas at least 100 feet away from streams and wetlands.
- Contractors shall be required to perform all routine equipment maintenance at the staging area and recover and dispose of wastes in an appropriate manner.
- Fixed fuel dispensing locations will be provided with secondary containment to capture fuel from leaks, drips, and overfills.
- Temporary liners, berms, or dikes (secondary containment) shall be constructed around the aboveground bulk tanks, providing 110 percent containment volume of the largest storage tank or trailer within the containment structure, so that potential spill materials shall be contained and collected in specified areas. Tanks shall not be placed in areas subject to periodic flooding or washout.
- Drivers of tank trucks are responsible for safety and spill prevention during tank truck unloading. Procedures for loading and unloading tank trucks shall meet the minimum requirements established by the Department of Transportation.

- Drivers of tank trucks are responsible for setting brakes and chocking wheels prior to off loading. Warning signs requiring drivers to set brakes and chock wheels shall be displayed at all tanks. Proper grounding of equipment shall be undertaken during fuel transfer operations. Drivers shall observe and control the fueling operations at all times to prevent overfilling the temporary tank.
- Prior to departure of any tank truck, all vehicle outlets shall be examined closely by the driver for leakage, tightened, adjusted or replaced to prevent leakage while in transit.
- A supply of sorbent and barrier materials sufficient to allow the rapid containment and recovery of spills shall be maintained at each construction staging area. Sorbent and barrier materials shall also be utilized to contain runoff from contaminated areas.
- Shovels and drums shall be kept at each of the individual staging areas. In the event that small quantities of soil become contaminated, shovels shall be utilized to collect the soil and the material shall be stored in 55-gallon drums. Large quantities of contaminated soil may be bio-remediated on site or disposed in an approved landfill, subject to government approval, or collected utilizing heavy equipment, and stored in drums or other suitable containers prior to disposal. Should contamination occur adjacent to staging areas as a result of runoff, shovels or heavy equipment shall be utilized to collect the contaminated material. Contaminated soil shall be disposed of in accordance with state and federal regulations.
- Temporary aboveground tanks shall be subject to visual inspection on a monthly basis and when the tank is refilled. Inspection records shall be maintained. Operators shall routinely keep tanks under close surveillance and potential leaks or spills shall be quickly detected.
- Visible fuel leaks shall be reported to the Contractors' designated representative and corrected as soon as conditions warrant. Keystone's designated representative shall be informed.
- Drain valves on temporary tanks shall be locked to prevent accidental or unauthorized discharges from the tank.
- Oil and other hazardous materials stored in 350-gallon totes, 55-gallon drums, 5-gallon pails, smaller retail-size containers or other portable containers will be staged or stored in areas with a secondary temporary containment structure. Secondary containment structures may consist of temporary earthen berms with a chemical resistant liner, or a portable containment system constructed of steel, PVC, or other suitable material. The secondary containment structure will be capable of containing 110 percent of the volume of material stored in these areas.

Keystone may allow modification of the above specifications as necessary to accommodate specific situations or procedures. Any modifications must comply with all applicable regulations and permits.

3.1.2 Construction Right-of-Way

The Contractor will ensure that all equipment is free of leaks prior to use on the Project and prior to entering or working in or near waterbodies or wetlands. Throughout construction, the Contractor will conduct regular maintenance and inspections of the equipment to reduce the potential for spills or leaks.

Rubber-tired vehicles (pickup trucks, buses) normally shall refuel at the construction staging areas or commercial gas stations. Tracked machinery (backhoes, bulldozers) shall be refueled and lubricated on the construction right-of-way. Equipment maintenance shall be conducted in staging areas when practical. When impractical, repairs to equipment can be made on the construction right-of-way when approved by Keystone's representative.

Each fuel truck that transports and dispenses fuel to construction equipment or Project vehicles along the construction ROW or within equipment staging and material areas shall carry an oil spill response kit and spill response equipment onboard at all times. In the event that response materials are depleted through use or their condition is deteriorated through age, the materials will be replenished prior to placing the fueling vehicle back into service.

The following preventive measures apply to refueling and lubricating activities on the construction right-of-way:

- Construction activities shall be conducted to allow for prompt and effective cleanup of spills of fuel and other hazardous materials. Each construction crew, including cleanup crews shall have on hand sufficient tools and material to stop leaks and supplies of absorbent and barrier materials to allow rapid containment and recovery of spilled materials. Crew members must know and follow the procedure for reporting spills.
- Refueling and lubricating of construction equipment shall be restricted to upland areas at least 100 feet away from streams and wetlands. Where this is not possible (e.g., trench dewatering pumps), the equipment shall be fueled by designated personnel with special training in refueling, spill containment, and cleanup. The Environmental Inspector shall ensure that signs are installed identifying restricted areas.
- No fuel, oil or hazardous material storage, staging, or transfer other than refueling will occur within 100 feet of any storm drain, drop inlet, or high consequence area (HCA).
- Spent oils, lubricants, filters, etc. shall be collected and disposed of at an approved location in accordance with state and federal regulations.
- Equipment shall not be washed in streams.
- Stationary equipment will be placed within a secondary containment if it will be operated or require refueling within 100 feet of a wetland or waterbody boundary.

Keystone may allow modification of the above specifications as necessary to accommodate specific situations or procedures. Any modifications must comply with all applicable regulations and permits.

3.2 Contingency Plans

The Contractor shall develop emergency response procedures for all incidents (e.g., spills, leaks, fires) involving hazardous materials which could pose a threat to human health or the environment. The procedures shall address activities in all work areas, as well as during transport to and from the construction right-of-way and to any disposal or recycling facility.

3.3 Equipment

The Contractor shall retain emergency response equipment in all areas where hazardous materials are handled or stored. This equipment shall be readily available to respond to a hazardous material emergency. Such equipment shall include, but not be limited to, the following:

- first aid supplies;
- phone or communications radio;
- protective clothing (Tyvek suit, gloves, goggles, boots);
- hand-held fire equipment;
- absorbent material and storage containers;
- non-sparking bung wrench and shovel; and
- brooms and dust pan.

Hazardous material emergency equipment shall be carried in all mechanic and supervisor vehicles. This equipment shall include, at a minimum:

- first aid supplies;
- phone or communications radio;
- 2 sets of protective clothing (Tyvek suit, gloves, goggles, boots);
- 1 non-sparking shovel;
- 6 plastic garbage bags (20 gallon);
- 10 absorbent socks and spill pads;
- Hand-held fire extinguisher;
- barrier tape; and
- 2 orange reflector cones.

Fuel and service trucks shall carry a minimum of 20 pounds of suitable commercial sorbent material.

The Contractor shall inspect emergency equipment weekly, and service and maintain equipment regularly. Records shall be kept of all inspections and services.

3.4 Emergency Notification

Emergency notification procedures between the Contractor and Keystone shall be established in the planning stages of construction. A Keystone representative shall be identified to serve as contact in the event of a spill during construction activities. In the event of a spill meeting government reporting criteria, the Contractor immediately shall notify the Keystone representative who, in turn, shall notify the appropriate regulatory agencies.

Any material released into water that creates a sheen must be reported immediately to Keystone. The Contractor is required to notify Keystone immediately if there is any spill of oil, oil products, or hazardous materials that reaches a wetland or waterbody. Incidents on public highways shall be reported to Keystone and the appropriate agencies by Keystone.

If a spill occurs on navigable waters of the United States, Keystone shall notify the National Response Center (NRC) at 1-800-424-8802. For spills that occur on public lands, into surface waters, or into sensitive areas, the appropriate governmental agency's district office also shall be notified.

3.5 Spill Containment and Countermeasures

In the event of a spill of hazardous material, Contractor personnel shall:

- notify the appointed Keystone representative;
- identify the product hazards related to the spilled material and implement appropriate safety procedures, based on the nature of the hazard;
- control danger to the public and personnel at the site;
- implement spill contingency plans and mobilize appropriate resources and manpower;
- isolate or shutdown the source of the spill;
- block manholes or culverts to limit spill travel;
- initiate containment procedures to limit the spill to as small an area as possible to prevent damage to property or areas of environment concern (e.g., watercourses); and
- commence recovery of the spill and cleanup operations.

When notified of a spill, the Keystone representative shall immediately ensure that:

- Action is taken to control danger to the public and personnel at the site.
- Spill contingency plans are implemented and necessary equipment and manpower are mobilized.

- Measures are taken to isolate or shutdown the source of the spill.
- All resources necessary to contain, recover and clean up the spill are available.
- Any resources requested by the Contractor from Keystone are provided.
- The appropriate agencies are notified. For spills which occur on public lands, into surface waters or into sensitive areas, the appropriate federal or state managing office shall also be notified and involved in the incident.

For a land spill, berms shall be constructed with available equipment to physically contain the spill. Personnel entry and travel on contaminated soils shall be minimized. Sorbent materials shall be applied or, if necessary, heavily contaminated soils shall be removed to an approved facility. Contaminated sorbent materials and vegetation shall also be disposed of at an approved facility.

For a spill threatening a waterbody, berms or trenches shall be constructed to contain the spill prior to entry into the waterbody. Deployment of booms, skimmers, and sorbent materials shall be necessary if the spill reaches the water. The spilled product shall be recovered and the contaminated area shall be cleaned up in consultation with spill response specialists and appropriate government agencies.

4.0 UPLANDS (AGRICULTURAL, FOREST, PASTURE, RANGE AND GRASS LANDS)

4.1 Interference with Irrigation Systems

If existing irrigation systems (flood irrigation, ditch irrigation, pivot, wheel, or other type of spray irrigation systems), irrigation ditches, or sheet flow irrigation shall be impacted by the construction of the pipeline, the following mitigative measures shall be implemented unless otherwise approved or directed by Keystone:

- If it is feasible and mutually acceptable to Keystone and the landowner or landowner's designate, temporary measures shall be implemented to allow an irrigation system to continue to operate across land on which the pipeline is being constructed.
- If the pipeline or temporary work areas intersect an operational (or soon to be operational) pivot or other spray irrigation system, Keystone shall establish with the landowner or landowner's designate an acceptable amount of time the irrigation system may be out of service. If an irrigation system interruption results in crop damages, either on the pipeline construction right-of-way or off the construction right-of-way, the landowner shall be compensated reasonably for all such crop damages.
- If the pipeline or temporary work areas intersect an operational sheet flow irrigation system, Keystone shall establish with the landowner or landowner's designate an acceptable amount of time the irrigation system may be out of service. If an irrigation system interruption results in crop

damages, either on the pipeline construction right-of-way or off the construction right-of-way, the landowner shall be compensated reasonably for all such crop damages.

- Irrigation ditches that are active at the time of construction shall not be stopped or obstructed except for the length of time to install the pipeline beneath the ditch (typically, one day or less) unless otherwise approved or directed by Keystone.

4.2 Clearing

The objective of clearing is to provide a clear and unobstructed right-of-way for safe and efficient construction of the pipeline. The following mitigable measures shall be implemented:

- Construction traffic shall be restricted to the construction right-of-way, existing public roads, and approved private roads.
- Construction right-of-way boundaries including pre-approved temporary workspace shall be clearly staked to prevent disturbance to unauthorized areas.
- If crops are present, they shall be mowed or disced to ground level unless an agreement is made for the landowner to remove.
- Burning is prohibited on cultivated land.
- Construction right-of-way at timber shelterbelts in agricultural areas shall be reduced to the minimum necessary to construct the pipeline.

4.3 Topsoil Removal and Storage

The objective of topsoil handling is to maintain topsoil capability by conserving topsoil for future replacement and reclamation and to minimize the degradation of topsoil from compaction, rutting, loss of organic matter, or soil mixing so that successful reclamation of the right-of-way can occur. The following mitigative measures shall be implemented during topsoil removal and storage unless otherwise approved or directed by Keystone based on site-specific conditions or circumstances. All work shall be conducted in accordance with applicable permits.

- In areas designated for topsoil segregation, the actual depth of the topsoil, to a maximum depth of 12 inches, will be stripped from:
    - The area excavated above the pipeline; or
    - The area above the pipeline plus the spoil storage; or
    - The area above the pipeline plus the working side; or
    - Entire ROW

  as required by applicable permit agreements with the landowner or as dictated by site-specific conditions.

- Stripped topsoil is to be stockpiled in a windrow along the edge of the right-of-way. The Contractor shall perform work in a manner to minimize the potential for subsoil and topsoil to be mixed.
- Under no circumstances shall the Contractor use topsoil to fill a low area.
- If required due to excessively windy conditions, topsoil piles shall be tackified using either water or a suitable tackifier (liquid mulch binder).
- Gaps in the rows of topsoil will be left in order to allow drainage and prevent ponding of water adjacent to or on the right-of-way.
- Topsoil shall not be utilized to construct ramps at road or waterbody crossings.
- In areas with defined saline or sodic soil concerns, a triple-ditch method will be used to segregate problem soils as indicated in Detail 67 and 67A.
- If frozen topsoil conditions are encountered during winter construction, specialized construction equipment (i.e. ripping, frozen topsoil cutter, road reclaimer, etc) may be required to adequately segregate and conserve topsoil resources.

4.4 Grading

The objective of grading is to develop a right-of-way that allows the safe passage of equipment and meets the bending limitations of the pipe. The following mitigative measures shall be implemented during grading unless otherwise approved or directed by Keystone based on site-specific conditions or circumstances. However, all work shall be conducted in accordance with applicable permits.

- All grading shall be undertaken with the understanding that original contours and drainage patterns shall be re-established to the extent practicable..
- Agricultural areas that have terraces shall be surveyed to establish pre-construction contours to be utilized for restoration of the terraces after construction.
- On steep slopes, or wherever erosion potential is high, temporary erosion control measures shall be implemented.
- Bar ditches adjacent to existing roadways to be crossed during construction shall be adequately ramped with grade or ditch spoil to prevent damage to the road shoulder and ditch.
- Where the construction surface remains inadequate to support equipment travel, timber mats, timber riprap, or other method shall be used to stabilize surface conditions.

The Contractor shall limit the interruption of the surface drain network in the vicinity of the right-of-way using the appropriate methods:

- providing gaps in the rows of subsoil and topsoil in order to prevent any accumulation of water on the land;

- preventing obstructions in furrows, furrow drains, and ditches;
- installing flumes and ramps in furrows, furrow drains, and ditches to facilitate water flow across the construction right-of-way and allow for construction equipment traffic; and
- installing flumes over the trench for any watercourse where flow is continuous during construction.

4.5 Temporary Erosion and Sediment Control

4.5.1 General

Temporary erosion and sediment control measures shall be installed immediately after initial disturbance of the soil, maintained throughout construction (on a daily basis), and reinstalled as necessary until replaced by permanent erosion control structures or restoration of the construction right-of-way is complete.

Specifications and configurations for erosion and sediment control measures may be modified by Keystone as necessary to suit actual site conditions. However, all work shall be conducted in accordance with applicable permits.

The Contractor shall inspect all temporary erosion control measures at least daily in areas of active construction or equipment operation, weekly in areas with no construction or equipment operation, and within 24 hours of each significant rainfall event of 0.5 inches or greater. The Contractor shall repair all ineffective temporary erosion control measures as expediently as practicable.

4.5.2 Sediment Barriers

Sediment barriers shall be constructed of silt fence, staked hay or straw bales, compacted earth (e.g., drivable berms across travel lanes), sand bags, or other appropriate materials.

The Contractor shall install sediment barriers in accordance with Details 1 and 2 or as otherwise approved or directed by Keystone. The Contractor is responsible for properly installing, maintaining, and replacing temporary and permanent erosion controls throughout construction and cleanup. In wetland or riparian zones, the Contractor will install sediment control structures along the construction right-of-way edges prior to vegetation removal where practicable. The aforementioned sediment barriers may be used interchangeably or together depending on site-specific conditions. In most cases, silt fence shall be utilized where longer sediment barriers are required.

Sediment barriers shall be installed below disturbed areas where there is hazard of offsite sedimentation. These areas include:

- the base of slopes adjacent to road crossings;

- the edge of the construction right-of-way adjacent to and upgradient of a roadway, flowing stream, spring, wetland, or impoundment;
- trench or test water discharge locations where required;
- where waterbodies or wetlands are adjacent to the construction right-of-way; (the Contractor shall install sediment barriers along the edge of the construction right-of-way as necessary to contain spoil and sediment within the construction right-of-way)
- across the entire construction right-of-way at flowing waterbody crossings;
- right-of-way immediately upslope of the wetland boundary at all standard (saturated or standing water) wetland crossings as necessary to prevent sediment flow into the wetland; (Sediment control barriers are not required at “dry” wetlands.)
- along the edge of the construction right-of-way within standard (saturated or standing water) wetland boundaries as necessary to contain spoil and sediment within the construction right-of-way. Sediment control barriers are not required at “dry” wetlands (Detail 8).

Sediment barriers placed at the toe of a slope shall be set a sufficient distance from the toe of the slope, if possible, in order to increase ponding volume.

Sediment control barriers shall be placed so as not to hinder construction operations. If silt fence or straw bale sediment barriers (in lieu of drivable berms) are placed across the entire construction right-of-way at waterbodies, wetlands, or upslope of roads, a provision shall be made for temporary traffic flow through a gap for vehicles and equipment to pass within the structure. Immediately following each day’s shutdown of construction activities, a row of straw bales or a section of silt fence shall be placed across the up gradient side of the gap with sufficient overlap at each end of the barrier gap to eliminate sediment bypass flow, followed by bales tightly fitted to fill the gap. Following completion of the equipment crossing, the gap shall be closed using silt fence or straw bale sediment barrier.

The Contractor shall maintain straw bale and silt fence sediment barriers by removing collected sediment and replacing damaged bales. Sediment shall be removed and placed where it shall not reenter the barrier when sediment loading is greater than 40 percent or if directed by Keystone. If straw bale filters cannot be cleaned out due to access problems, the Contractor shall place a new row of sediment barriers upslope.

The Contractor shall use mulch and straw bales that are free of noxious weeds. Mulch or straw bales that contain evidence of noxious weeds or other undesirable species shall be rejected by the Contractor.

The Contractor shall remove sediment barriers, except those needed for permanent erosion and sediment control, during cleanup of the construction right-of-way.

4.5.3 Trench Plugs

The Contractor shall use trench plugs at waterbody and wetland crossings at the direction of the Environmental Inspector to prevent diversion of water into upland portions of the pipeline trench and to keep any accumulated trench water out of the waterbody. Trench plugs shall be of sufficient size to withstand upslope water pressure.

4.5.4 Temporary Slope Breakers (Water Bars)

The Contractor shall install temporary slope breakers on slopes greater than 5% on all disturbed lands at the following recommended spacing:

Slope (%)	Spacing (feet)
5 - 15	300
>15 - 30	200
>30	100

The gradient of each slope breaker shall be 2 to 4 percent.

If so directed by the landowner, the Contractor may not install temporary slope breakers (water bars) in cultivated land.

Temporary slope breakers shall be constructed of soil, silt fence, staked straw bales, sand bags, or similar materials authorized by Keystone.

The Contractor shall direct the outfall of each temporary slope breaker to a stable, well-vegetated area or construct an energy-dissipating device at the end of the slope breaker and off the construction right-of-way as permitted in the landowner agreement as shown in Detail 3. The outfall of each temporary slope breaker shall be installed to prevent sediment discharge into wetlands, waterbodies, or other sensitive resources.

Specifications and configurations for temporary slope breakers may be modified by Keystone as necessary to suit actual site conditions. However, all work shall be conducted in accordance with applicable permits.

4.5.5 Drainage Channels or Ditches

Drainage channels or ditches shall be used on a limited basis to provide drainage along the construction right-of-way and toe of cut slopes as well as to direct surface runoff across the construction right-of-way or away from disturbances and onto natural undisturbed ground. Channels or ditches shall be constructed by the Contractor during grading operations. Where there is inadequate vegetation at the channel or ditch outlet,

sediment barriers, check berms, or other appropriate measures shall be used to control erosion.

4.5.6 Temporary Mulching and Cover Crops

Unless otherwise directed by Keystone, the Contractor shall apply temporary seed and/or mulch on disturbed construction work areas that have been inactive for one month or are expected to be inactive for a month or more. The Contractor shall not apply temporary mulch in cultivated areas unless specifically requested by the landowner or in areas particularly prone to erosion. The Contractor shall not apply mulch within wetland boundaries.

Temporary mulch of straw or equivalent applied on slopes shall be spread uniformly to cover at least 75 percent of the ground surface at an approximate rate of 2 tons per acre of straw or its equivalent. Mulch application on slopes within 100 feet of waterbodies and wetlands shall be increased to an approximate rate of 3 tons per acre.

All seed that is used as a temporary cover crop will be approved and/or provided by Keystone.

4.5.7 Tackifier

When wetting topsoil piles with water does not prevent wind erosion, the Contractor shall temporarily suspend topsoil handling operations and apply a tackifier to topsoil stockpiles at the rate recommended by the manufacturer. The type of Tackifier will be approved by Keystone.

Should construction traffic, cattle grazing, heavy rains, or other related construction activity disturb the tackified topsoil piles and create a potential for wind erosion, additional tackifier shall be applied by the Contractor.

4.6 Stringing

The objective of stringing is to place the line pipe along the construction right-of-way for bending and welding in an expedient and efficient manner.

The Contractor shall utilize one or more of the following mitigative measures as applicable and when necessary to reduce compaction on the working side of the right-of-way or as directed by Keystone. However, all work shall be conducted in accordance with applicable permits.

- prohibiting access by certain vehicles;
- using only machinery possessing low ground pressure (tracks or extra-wide tires);
- limiting access and thus minimizing the frequency of all vehicle traffic;
- digging ditches to improve surface drainage;

- using timber riprap, matting, or geotextile fabric overlain with soil; and
- stopping construction for a period of time.

4.7 Trenching

The objective of trenching is to provide a ditch of sufficient depth and width with a bottom to continuously support the pipeline. During trenching operations, the following mitigative measures shall be implemented unless otherwise approved or directed by Keystone based on site-specific conditions or circumstances. All work shall be conducted in accordance with applicable permits.

- Where required, subsoil shall be segregated from topsoil in separate, distinct rows with a separation that shall limit any admixing of topsoil and subsoil during handling.
- Triple ditch soil handling will be completed at sites identified by Keystone according to Detail 67 and 67A to prevent soil degradation.
- Gaps must be left in the spoil piles that coincide with breaks in the strung pipe to facilitate natural drainage patterns and to allow the passage of livestock or wildlife.
- Trenching operations shall be followed as closely as practicable by lower in and backfill operations to minimize the length of time the ditch is open.
- Construction debris (e.g., welding debris) and other garbage shall not be deposited in the ditch.
- If trenching, pipe installation and backfill operations take place during frozen soil conditions, final clean-`up (including additional trench compaction, subsoil feathering, final contouring and topsoil replacement) will be delayed until the subsoil and topsoil thaw completely the following spring/summer. A pronounced subsoil berm will be left over the trench line until final clean-up takes place to account for settlement of thawing backfill. Gaps will be left in the berm to maintain cross-ROW drainage

The Contractor shall prepare a blasting plan that is applicable to any locations where blasting will be necessary adjacent to existing high pressure pipelines, overhead or underground utilities, farm operations, or public crossings. The Contractor and its blasting supervisor shall be thoroughly familiar with and comply with the rules and regulations of Occupational Safety and Health Administration (OSHA) and all federal, state, county and local regulations governing blasting operations. Keystone will file the blasting plan with applicable state or local jurisdictions, where required. Excavation and blasting along the ROW may uncover paleontological resources of scientific value. Keystone will consult with the appropriate regulatory agencies in each state on the applicability and requirements for Paleontological Resource Protection Plans. Keystone will prepare and file plans addressing vertebrate fossils with any respective states, as required.

Should blasting be necessary for removal of rock, the following mitigative measures may be implemented:

- The Contractor shall use non-electric initiation systems for all blasting operations. If required by the blasting plan, blasting will be monitored for vibration levels and peak particle velocity. This work shall be performed by a third-party vibration monitoring consultant hired by and reporting to the Constructor Representative. The Contractor shall arrange for detonations to be carried out in cooperation with this consultant.
- Prior to using explosives, the Contractor shall advise residents of the immediate area, in order to prevent any risk of accidents or undue disturbances.
- No blasting shall be done without approval of the Constructor Representative. Prior to any detonation of explosives in the vicinity of a loaded line, dwelling, structure, overhead or underground utility, farm operation, or public crossings, a minimum of 48 hour's notice shall be given to the Constructor Representative, in order that the appropriate people can be notified and the upstream and downstream mainline valves can be staffed.
- The Contractor shall obtain all necessary permits and shall comply with all legal requirements in connection with the use, storage, and transportation of explosives.
- Blasting mats or subsoil may be piled over the trench line to prevent rock from being blown outside the construction right-of-way.
- Each blasting location shall be cleared and cleaned up before and after all blasting operations.
- Blasting shall be carried out during regular, daylight working hours.
- The Contractor shall at all times protect his workers and the public from any injury or harm that might arise from drilling dust and the use of explosives.
- Only workers thoroughly experienced in handling explosives shall be permitted to supervise, handle, haul, load or shoot explosives. In those jurisdictions where the licensing of blasters is mandatory, the Contractor shall provide the Constructor Representative with proof of the required certification for every person so required.
- The drilling pattern shall be set in a manner to achieve smaller rock fragmentation (maximum 1 foot in diameter) in order to use as much as possible of the blasted rock as backfill material after the pipe has been padded in accordance with the specifications.
- Blasting testing of surface-water resources and water wells within 150 feet of the centerline will be performed in compliance with all applicable permits.

4.7.1 Trench Dewatering/Well Points

The Contractor shall make all reasonable efforts to discharge trench water in a manner that avoids damage to adjacent agricultural land, crops, and pasture. Damage includes, but is not limited to, the inundation of crops for more than 24 hours, deposition of sediment in ditches, and the deposition of gravel in fields or pastures.

If trench dewatering is necessary in an area where salt damage to adjacent crops is evident, the Environmental Inspector shall conduct a field conductivity test on the trench water before it is discharged. If the conductivity of the trench water is determined to potentially affect soil quality, it shall not be discharged to areas where salt damage to crops is evident, but shall be directed as feasible so that water flows over a well vegetated, non-cropland area or through an energy dissipater and sediment barrier.

When pumping water from the trench for any reason, the Contractor shall ensure that adequate pumping capacity and sufficient hose is available to permit dewatering as follows:

- No heavily silt-laden trench water shall be allowed to enter a waterbody or wetland directly but shall instead be diverted through a well vegetated area, a geotextile filter bag, or a permeable berm (straw bale or Keystone approved equivalent).
- Trench water shall not be disposed of in a manner which could damage crops or interfere with the functioning of underground drainage systems.

The Contractor shall screen the intake hose and keep the hose either one foot off the bottom of the trench or in a container to minimize entrainment of sediment.

4.8 Welding, Field Joint Coating, and Lowering In

The objectives of welding, field joint coating, and lowering in are to provide continuous segments of pipeline, to provide corrosion protection to the weld areas of the pipeline, and to place the pipeline in the center of the trench, without stress, at the required depth of cover. The following mitigative measures shall be followed during pipe welding, field joint coating, and lowering in, unless otherwise specified by Keystone in response to site-specific conditions or circumstances. All work shall be conducted in accordance with applicable permits.

- Shavings produced during beveling of the line pipe are to be removed immediately following this operation to ensure that livestock and wildlife do not ingest this material. When welding operations create a continuous line of pipe that may be left in the right-of-way for an extended period of time due to construction or weather constraints, a gap in the welded pipe shall be provided to allow for access at farm road crossings and for passage of livestock and wildlife.
- Prior to the application of epoxy powder, urethane epoxy, or other approved pipe coatings, a tarp shall be placed underneath the pipe in wetlands to collect any overspray of epoxy powder and liquid drippings. Excess powder, liquid, or other hazardous materials (e.g. brushes, rollers, gloves) shall be continuously collected and removed from the construction right-of-way and disposed of in a manner appropriate for these materials.

4.9 Padding and Backfilling

The objective of padding and backfilling is to cover the pipe with material that is not detrimental to the pipeline and pipeline coating. The following mitigative measures shall be utilized during backfilling, unless otherwise approved or directed by Keystone based on site-specific conditions or circumstances. All work shall be conducted in accordance with applicable permits.

- Excessive water accumulated in the trench shall be eliminated prior to backfilling.
- In the event it becomes necessary to pump water from open trenches, the Contractor shall pump the water and discharge it in accordance with the requirements of the Stormwater Pollution Prevention Plan (SWPPP) in order to avoid damaging adjacent areas. Detail 5 and Detail 6 provide typical examples of dewatering structures.
- If it is impossible to avoid water-related damages (including inundation of crops for more than 24 hours, deposition of sediment in ditches and other water courses, and the deposition of gravel in fields, pastures, and any water courses), Keystone shall reasonably compensate the landowners for the damage and/or shall correct the damage so as to restore the land, crops, pasture, water courses, etc. to their pre-construction condition.
- All pumping of water shall comply with existing drainage laws and local ordinances relating to such activities and provisions of the Clean Water Act.
- Prior to backfilling, all drain tile shall be permanently repaired, inspected, and the repair documented as described in Section 5.5.
- Prior to backfilling, trench breakers shall be installed on slopes where necessary to minimize the potential for water movement down the ditch and potential subsequent erosion.
- During backfill, the stockpiled subsoil shall be placed back into the trench before replacing the topsoil.
- Topsoil shall not be utilized for padding the pipe.
- Backfill shall be compacted to a minimum of 90% of pre-existing conditions where the trench line crosses tracks of wheel irrigation systems (pivots).
- To reduce the potential for ditch line subsidence, spoil shall be replaced and compacted by backhoe bucket or by the wheels or tracks of equipment traversing down the trench.
- The lesser of 4 feet or the actual depth of topsoil cover, shall not be backfilled with soil containing rocks of any greater concentration or size than existed prior to pipeline construction in the pipeline trench, bore pits, or other excavations.

4.10 Cleanup

The objective of cleanup activities shall be to prepare the right-of-way and other disturbed areas to approximate pre-activity ground contours where appropriate and to replace spoil and stockpiled material in a manner which preserves soil

capability and quality to a degree reasonably equivalent to the original or that of representative undisturbed land. The following mitigative measures shall be utilized during cleanup, unless otherwise approved or directed by Keystone based on specific conditions or circumstances. All work shall be conducted in accordance with applicable permits.

- Cleanup shall occur immediately following backfilling operations when weather or seasonal conditions allow.
- All garbage and construction debris (e.g., lathing, ribbon, welding rods, pipe bevel shavings, pipe spacer ropes, end caps, pipe skids) shall be collected and disposed of at approved disposal sites.
- The right-of-way shall be re-contoured with spoil material to approximate pre-construction contours and as necessary to limit erosion and subsidence. Loading of slopes with unconsolidated spoil material shall be avoided during slope re-contouring. Topsoil shall be replaced after re-contouring of the grade with subsoil. The topsoil shall be replaced on the subsoil storage area and over the trench so that after settling occurs, the topsoil's approximate original depth and contour (with an allowance for settling) shall be achieved.
- Where topsoil has been segregated, subsoil shall not be permanently placed on top of topsoil.
- Surface drainage shall be restored and re-contoured to conform to the adjacent land drainage system.
- Erosion control structures such as permanent slope breakers and cross ditches shall be installed on steep slopes where necessary to control erosion by diverting surface run-off from the right-of-way to stable and vegetated off right-of-way areas.
- During cleanup, temporary sediment barriers such as silt fence and hay bale diversions will be removed; accumulated sediment will re-contoured with the rest of the ROW; and permanent erosion controls will be installed as necessary.
- After construction, all temporary access shall be returned to prior construction conditions unless specifically agreed with the landowner or otherwise specified by Keystone.
- Warning signs, aerial markers, and cathodic protection test leads shall be installed in locations in compliance with U.S. Federal code and in locations that shall not impair farming operations where practicable.
- All bridges, fences and culverts existing prior to construction shall be restored to meet or exceed approximate pre-construction conditions. Caution shall be utilized when re-establishing culverts to ensure that drainage is not improved to a point that would be detrimental to existing waterbodies and wetlands.
- All temporary gates installed during construction shall be replaced with permanent fence unless otherwise requested by the landowner.

4.11 Reclamation and Revegetation

The objectives of reclamation and revegetation are to return the disturbed areas to approximately pre-construction use and capability. This involves the treatment of soil as necessary to preserve approximate pre-construction capability and the stabilization of the work surface in a manner consistent with the initial land use.

The following mitigative measures will be utilized unless otherwise approved or directed by Keystone based on site specific conditions or circumstances. However, all work shall be conducted in accordance with applicable permits.

4.11.1 Relieving Compaction

Compaction will typically be relieved in subsoils that have received substantial construction traffic, as determined by Keystone, prior to replacing and respreading topsoil. Compaction will typically not be relieved in topsoils that have been left in place and that have not been driven on. Any rock that is brought to the surface during decompaction activities will be removed until the quantity, size, and distribution of rock is equivalent to that found on adjacent land as determined by the Environmental Inspector. Compaction will typically be relieved as follows:

- Compacted cropland compacted shall be ripped a minimum of 3 passes at least 18 inches deep and all pasture shall be ripped or chiseled a minimum of three passes at least 12 inches deep before replacing topsoil.
- Areas of the construction right-of-way that were stripped for topsoil salvage shall be ripped a minimum of 3 passes (in cross patterns, as practical) prior to topsoil replacement. The approximate depth of ripping shall be 18 inches (or a lesser depth if damage may occur to existing drain tile systems). After ripping, the subsoil surface shall be graded smooth and any subsoil clumps broken up (disc and harrow) in an effort to avoid topsoil mixing.
- The de-compacted construction right-of-way shall be tested by the Contractor at regular intervals for compaction in agricultural and residential areas. Tests shall be conducted on the same soil type under similar moisture conditions in undisturbed areas immediately adjacent to the right-of-way to approximate pre-construction conditions. Penetrometers or other appropriate devices shall be used to conduct tests
- Topsoil shall be replaced to pre-existing depths once ripping and discing of subsoil is complete up to a maximum of 12 inches. Topsoil compaction on cultivated fields shall be alleviated with cultivation methods by the contractor.
- If there is any dispute between the landowner and Keystone as to what areas need to be ripped or chiseled, the depth at which compacted areas should be ripped or chiseled, or the necessity or

rates of lime and fertilizer application, the appropriate NRCS shall be consulted by Keystone and the landowner.

Plowing under of organic matter including wood chips and manure, or planting of a green crop such as alfalfa to decrease soil bulk density and improve soil structure or any other measures in consultation with the Natural Resource Conservation Service (NCRS) shall be considered if mechanical relief of compaction is deemed not satisfactory.

In the first year after construction, Keystone will inspect the ROW to identify areas of erosion or settling. Subsequently, Keystone will monitor erosion and settling through aerial patrols, which are part of Keystone's Integrity Management Plan, and through landowner reporting. Landowner reporting will be facilitated through use of Keystone's toll-free telephone number, which will be made available to all landowners on the ROW. Landowner reporting also may be facilitated through contact with Keystone's field offices.

Keystone plans to minimize impacts on soil productivity that may result from construction activities, but recognizes that some short- to long-term decreases in agricultural productivity are possible. Keystone recognizes its responsibility to restore agricultural productivity on the pipeline ROW and to compensate landowners for demonstrated decreases in productivity that may result from any degradation of agricultural soils along the ROW.

4.11.2 Rock Removal

- Rocks that are exposed on the surface due to construction activity shall be removed from the right-of-way prior to and after topsoil replacement This effort will result in an equivalent quantity, size and distribution of rocks to that found on adjacent lands, as determined by the Environmental Inspectors.
- Clearing of rocks may be carried out with a mechanical rock picker or by manual means, provided that preservation of topsoil is assured. Rock removed from the right-of-way shall be hauled off the landowner's premises or disposed of on the landowner's premises at a location that is mutually acceptable to the landowner and to Keystone.

4.11.3 Soil Additives

If site-specific conditions warrant and if agreed to by the landowner, the Contractor shall apply amendments (fertilizer and soil pH modifier materials and formulations) commonly used for agricultural soils in the area and in accordance with written recommendations from the local soil conservation authority, land management agencies, or landowner. Amendments shall be incorporated into the normal plow layer as soon as possible after application.

4.11.4 Seeding

- The final seed mix shall be based on input from the local Natural Resource Conservation Service and the availability of seed at the time of reclamation. The landowner may request specific seeding requirements during easement negotiations.
- Certificates of seed analysis are required for all seed mixes to limit the introduction of noxious weeds.
- Seed not utilized within 12 months of seed testing shall be approved by Keystone prior to use. Seeding shall follow cleanup and topsoil replacement as closely as possible. Seed shall be applied to all disturbed surfaces (except cultivated fields unless requested by the landowner) as indicated on the construction drawings
- If mulch was applied prior to seeding for temporary erosion control, the Contractor shall remove and dispose of the excess mulch prior to seedbed preparation to ensure that seedbed preparation equipment and seed drills do not become plugged with excess mulch; and to support an adequate seedbed; and to ensure that seed incorporation or soil packing equipment can operate without becoming plugged with mulch.
- Identified seeding areas shall be seeded as specified by Keystone. Seeding rates shall be based on pure live seed.
- Weather conditions, construction right-of-way constraints, site access, topography and soil type shall influence the seeding method to be used (i.e., drill seeding versus broadcast seeding).
- The Contractor shall delay seeding as directed by Keystone until the soil is in the appropriate condition for seeding.
- The Contractor shall use a Truax brand or Keystone approved equivalent-type drill seeder equipped with a cultipacker designed and equipped to apply grass and grass-legume seed mixtures with mechanisms such as seed box agitators to allow even distribution of all species in each seed mix, with an adjustable metering mechanism to accurately deliver the specified seeding rate and with a mechanism such as depth bands to accurately place the seed at the specified depth.
- The Contractor shall operate drill seeders at an appropriate speed so the specified seeding rate and depth is maintained, as directed by Keystone.
- The Contractor shall calibrate drill seeders so that the specified seeding rate is planted. The row spacing on drill seeders shall not exceed 8 inches.
- The Contractor shall plant seed at depths consistent with the local or regional agricultural practices.

- Broadcast or hydro seeding, used in lieu of drilling, shall utilize NRCS-recommended seeding rates. Where seed is broadcast, the Contractor shall use a harrow, cultipacker, or other equipment immediately following broadcasting to incorporate the seed to the specified depth and to firm the seedbed.
- The Contractor shall delay broadcast seeding during high wind conditions if even distribution of seed is impeded.
- The Contractor shall hand rake all areas that are too steep or otherwise cannot be safely harrowed or cultipacked in order to incorporate the broadcast seed to the specified depth.
- Hydro seeding may be used, on a limited basis, where the slope is too steep or soil conditions do not warrant conventional seeding methods. Fertilizer, where specified, may be included in the seed, virgin wood fiber, tackifier, and water mixture. When hydro-seeding, virgin wood fiber shall be applied at the rate of approximately 3,000 pounds per acre on an air-dry weight basis as necessary to provide at least 75% ground cover. Tackifier shall consist of biodegradable, vegetable-based material and shall be applied at the rate recommended by the manufacturer. The seed, mulch, and tackifier slurry shall be applied so that it forms a uniform, mat-like covering of the ground.
- Keystone shall work with landowners to discourage intense livestock grazing of the construction right-of-way during the first growing season by utilization of temporary fencing or deferred grazing, or increased grazing rotation frequency.

4.11.5 Permanent Erosion and Sediment Control

The Contractor shall restore all existing landowner soil conservation improvements and structures disturbed by pipeline construction to the approximate pre-construction line and grade. Soil conservation improvements and structures include, but are not limited to, grassed waterways, toe walls, drop inlets, grade control works, terraces, levees, and farm ponds.

4.11.5.1 Trench Breakers

The Contractor shall install trench breakers in steep terrain where necessary to limit the potential for trench line erosion and at the base of slopes adjacent to waterbodies and wetlands.

Trench breakers shall be constructed of materials such as sand bags, sand/cement bags, bentonite bags, or other suitable materials by the Contractor (Detail 7). The Contractor shall not use topsoil in trench breakers.

4.11.5.2 Permanent Slope Breakers (Water Bars)

Permanent slope breakers (water bars) shall be constructed of soil or, in some instances, sand bags.

The Contractor shall construct permanent slope breakers on the construction right-of-way where necessary to limit erosion, except in cultivated and residential areas. Slope breakers shall divert surface runoff to adjacent stable vegetated areas or to energy-dissipating devices as shown on Detail 3. In general, permanent slope breakers should be installed immediately downslope of all trench breakers. Permanent slope breakers shall be installed as specified on the construction drawings or generally with a minimum spacing as shown on the following table:

Slope (%)	Spacing (feet)
5 - 15	300
>15 – 30	200
>30	100

The gradient (fall) for each slope breaker shall be two percent to four percent unless otherwise approved by Keystone based on site-specific conditions.

The Contractor shall construct slope breakers to divert surface flow to a stable, well-vegetated area. In the absence of a stable area, the Contractor shall construct appropriate energy-dissipating devices at the end of the slope breaker and beyond the area disturbed by construction.

4.11.5.3 Mulching

The Contractor shall apply mulch on all areas with high erosion potential and on slopes greater than 8 percent unless otherwise approved by Keystone based on site-specific conditions or circumstances. The Contractor shall spread mulch uniformly over the area to cover at least 75 percent of the ground surface at an approximate rate of 2 tons per acre of straw or its equivalent. The Environmental Inspector may reduce the application rate or forego mulching an area altogether if there is an adequate cover of rock or organic debris to protect the slope from erosion, or if annual companion crops have stabilized the soil.

Mulch application includes straw mulch, hydro mulch and tackifier or other materials as approved by Keystone.

The Contractor shall use mulch that is free of noxious weeds.

The Contractor shall apply mulch immediately following seeding. The Contractor shall not apply mulch in wetlands.

If a mulch blower is used, the majority of strands of the mulching material shall not be shredded to less than 8 inches in length to allow anchoring. The Contractor shall anchor mulch immediately after application to minimize loss by wind and water.

When anchoring (straw crimping) by mechanical means, the Contractor shall use a tool specifically designed for mulch anchoring with flat, notched disks to properly crimp the mulch to a depth of 2 to 3 inches. A regular farm disk shall not be used to crimp mulch. The crimping of mulch shall be performed across the slope of the ground, not parallel to it. In addition, in areas of steep terrain, tracked vehicles may be used as a means of crimping mulch (equipment running up and down the hill to leave crimps perpendicular to the slope), provided they leave adequate coverage of mulch.

In soils possessing high erosion potential, the Contractor may be required to make two passes with the mulch-crimping tool; passes must be as perpendicular to the others as possible.

When anchoring with liquid mulch binders (tackifiers), the Contractor shall use a biodegradable tackifier derived from a vegetable-based, organic source. The Contractor shall apply mulch binders at rates recommended by the manufacturer.

The Contractor shall limit the use of tackifiers for anchoring straw and the use of hydromulch and tackifier to areas that are too steep or rocky to safely or effectively operate mechanical mulch-anchoring tools. No asphalt-based tackifiers shall be used on the Project.

4.11.5.4 Erosion Control Matting

Erosion control matting shall be applied where shown on the construction drawings as shown on Detail 4. The Contractor shall anchor the erosion control matting with staples or other approved devices.

The Contractor shall use erosion control matting made of biodegradable, natural fiber such as straw or coir (coconut fiber).

The Contractor shall prepare the soil surface and install the erosion control matting to ensure it is stable and the matting makes uniform contact with the soil of the slope face or stream bank with no bridging of rills, gullies, or other low areas.

4.11.5.5 Riprap and Stream Bank Stabilization

Disturbed banks of streambeds and waterbodies shall be restored to their approximate original contours unless otherwise directed. Erosion protection shall be applied as specified in the construction drawings.

Most restored banks will be protected through the use of flexible channel liners installed as specified in Detail 19.

If the original stream bank is excessively steep and unstable and/or flow conditions are severe, a more stable final contour may be specified and alternate stabilization measures may be installed.

Alternate stabilization measures may consist of rock riprap, bio-stabilization, or engineered structures such as brush layering, logwalls, cribwalls, or vegetated geo-grids. See Details 20, 23, and 24.

Stream bank riprap structures shall consist of a layer of stone underlain with approved filter fabric or a gravel filter blanket. Riprap shall extend from the stabilized streambed to the top of the stream bank. Native rock shall be utilized wherever practicable.

4.11.6 Fences

Upon completion of all backfilling, cleanup, and restoration, including mulching and seeding of the construction right-of-way, permanent repairs shall be made to all fences by using either the original material or good quality new material similar to existing fences.

Historic fences shall be carefully reassembled by hand from the original material. Where the original material has deteriorated to a state that makes it unsalvageable, replacement material similar to the original shall be used if possible.

4.11.7 Farm Terraces

Keystone will work with landowners and farm service agencies to ensure restoration of farm terraces to their pre-construction function. Keystone may elect to negotiate a fair settlement with the landowner to employ a local land leveling contractor to restore the terrace.

Before any groundwork is performed in areas with farm terraces, Keystone will conduct a civil survey to document the location and contours of each terrace. Both the channel contour and the terrace berm will be surveyed within the construction right-of-way and up to 100 feet on either side of the ROW boundaries. The pre-construction survey will

provide a baseline to ensure the proper restoration of the terrace following construction.

The Contractor will maintain the pre-disturbance drainage of water along the terrace channel and will install temporary flume pipe for this purpose. As necessary, temporary erosion control measures such as water bars and sediment barriers will be installed and maintained throughout construction to reduce the potential for soil erosion along or off the construction ROW.

Following installation of the pipe, the trench will be backfilled, and the Contractor will restore the terrace contours as agreed to with the landowner.

Should the landowner agree to have a local contractor restore the terraces, the Contractor will backfill the trench and restore the terrace using typical compaction methods for pipeline construction with the understanding that the landowner's contractor will re-excavate the location and re-install the terrace utilizing land levelling equipment and special compaction methods.

Should the landowner desire the Contractor to restore the terraces, the pipeline contractor will compact the trench before the terrace berm is replaced. Following restoration of the terraces, final contours and grades will be re-surveyed and documented with survey notes. Keystone will perform post-construction monitoring and inspection with the landowner's concurrence. Should the terraces require further work, Keystone will either compensate the landowner to perform the work or arrange for a local contractor to perform the work.

4.11.8 Right-of-Way and Pipeline Markers

Upon completion of all backfilling, cleanup and restoration, including mulching and seeding of the construction right-of-way, and during the time when the Contractor is making permanent repairs to fences, the Contractor shall install pipeline markers on each side of all roads, railroads, fence lines, stream crossings, and other areas where the pipeline markers do not conflict with intended land use.

4.12 Pasture and Range Lands

The following mitigative measures shall be implemented in addition to the requirements previously stated in Sections 4.1 thru 4.11 unless otherwise approved by Keystone based on site-specific conditions or circumstances. All work shall be conducted in accordance with applicable permits.

- Access across the right-of-way during construction shall be provided at locations requested by landowners, if practicable.
- Shavings produced during pipe bevel operations are to be removed immediately to ensure that livestock and wildlife do not ingest this material.

- Litter and garbage shall be collected and removed from the construction site at the end of the day's activities.
- Temporary gates shall be installed at fence lines for access to the construction right-of-way. These gates shall remain closed at all times. Upon completion of construction, the temporary gates shall be removed and the permanent fence replaced.
- Feeding or harassment of livestock or wildlife is prohibited.
- Construction personnel shall not be permitted to have firearms or pets on the construction right-of-way.
- All food and wastes shall be stored and secured in vehicles or appropriate facilities.
- Areas of disturbance in native range shall be seeded with a native seed mix after topsoil replacement.
- Improved pasture shall be seeded with a seed mix approved by individual landowners.

4.13 Forested Lands

Mitigation measures are required to ensure that pipeline construction activities have a minimal impact on forested lands.

Clearing, grubbing, and grading of trees, brush, and stumps shall be performed in accordance with the following mitigative measures in addition to the requirements previously stated in Sections 4.1 thru 4.11 unless otherwise approved or directed by Keystone based on site-specific conditions or circumstances. Keystone will address mitigation, reclamation and remediation measures with individual landowners and comply with any applicable state requirements. These measures include non-vegetative remediation to reverse impacts on windbreaks, shelterbelts, and living snow fences. Where the pipeline follows an existing ROW in forested areas, Keystone attempted to route the pipeline as close as practical to the existing ROW. All work shall be conducted in accordance with applicable permits.

- Prior to the start of clearing activity, right-of-way boundaries, including pre-approved temporary workspaces, shall be clearly staked to prevent disturbance of unauthorized areas.
- If trees are to be removed from the construction right-of-way, Keystone shall consult with the landowner or landowner's designate to see if there are trees of commercial or other value to the landowner. Timber shall be salvaged as per landowner request.
- If there are trees of commercial or other value to the landowner, Keystone shall allow the landowner the right to retain ownership of the trees with the disposition of the trees to be negotiated prior to the commencement of land clearing and included in the easement agreement.
- If not performed by the landowner, the construction right-of-way Contractor may salvage all marketable timber from designated areas.

- Tree stumps shall be grubbed to a maximum of 5 feet on either side of the trench line and where necessary for grading a level surface for pipeline construction equipment to operate safely.
- Keystone shall follow the landowner's or landowner designee's desires as stated in the easement agreement regarding the disposal of trees, brush, and stumps of no value to the landowner by burning, burial, etc., or complete removal from any affected property.
- Timber salvage operations shall use cut-off-type saw equipment. Felling shall be undertaken in a manner that minimizes butt shatter, breakage, and off ROW disturbance. Skidders or alternate equipment shall be used to transport salvaged logs to stacking sites.
- Trees shall be felled to fall toward the center line of the right-of-way to avoid breaking trees and branches off ROW. Leaners (felled trees that inadvertently fall into adjacent undisturbed vegetation) shall be salvaged.
- Trees and slash falling outside the right-of-way shall be recovered and disposed..
- Salvaged logs shall be limbed and topped before removal from the construction right-of-way. Log decks (if required) shall be oriented to best facilitate loading by picker trucks and be located adjacent to the working side of the right-of-way, where possible.
- The Contractor shall not be allowed to dispose of woody debris in wooded areas along the pipeline right-of-way.
- Pruning of branches hanging over the right-of-way shall be done only when necessary for construction. Any branch that is broken or seriously damaged should be cut off near its fork and the collar of the branch preserved.
- All tree wastes, stumps, tree crowns, brushes, branches, and other forest debris shall be either burned, chipped (using a mobile chipper), or removed from the right-of-way according to Keystone instructions contained in the specific mitigation measures. Burial of this waste material on the site by the Contractor shall require the landowner’s authorization. Chips must not be spread over cultivated land. However, they may be spread and incorporated with mineral soil over the forest floor at a density that shall not prevent revegetation of grass.
- Stump removal and brush clearing shall be done with bulldozers equipped with brush rakes to preserve organic matter.
- Decking sites shall be established: (1) approximately 2000 feet apart in timbered areas; (2) on sites located on approved temporary workspace in existing cleared areas; (3) in non-merchantable stands of timber; or (4) if no other options are available, in merchantable timber stands. Deck sites shall be appropriately sized to accommodate the loading equipment.
- If the landowner does not want the timber, the Contractor shall remove decked timber from the construction right-of-way and transport it to a designated all-weather access point or mill

4.14 Residential and Commercial/Industrial Areas

4.14.1 Residential and Commercial Areas

The principal measures that shall be used to mitigate impacts on existing residential and commercial areas include the following unless otherwise directed or approved by Keystone based on site-specific conditions or circumstances. All work shall be conducted in accordance with applicable permits.

- notifying landowners prior to construction;
- posting warning signs as appropriate;
- reducing the width of construction right-of-way, if practicable, by eliminating the construction equipment passing lane, reducing the size of work crews, or utilizing the “stove pipe” or “drag section” construction techniques;
- removing fences, sheds, and other improvements as necessary for protection from construction activities;
- to the extent possible, preserving mature trees and landscaping while ensuring the safe operation of construction equipment;
- fencing the edge of the construction work area that is within 25 feet to a residence for a distance of 100 feet on either side of the residence to ensure that construction equipment and materials, including the spoil pile, remain within the construction work area;
- limiting the hours during which operations with high-decibel noise levels (i.e., drilling and boring) can be conducted;
- limiting dust impact through prearranged work hours and by utilizing dust minimization techniques;
- ensuring that construction proceeds quickly through such areas, thus minimizing exposure to nuisance effects such as noise and dust;
- maintaining access and traffic flow during construction activities, particularly for emergency vehicles;
- cleaning up construction trash and debris daily;
- fencing or plating open ditches during non-construction activities;
- if the pipeline centerline is within 25 feet of a residence, ensuring that the trench is not excavated until the pipe is ready for installation and that the trench shall be backfilled immediately after pipe installation; and
- immediately after backfilling the trench, restoring all lawn areas, shrubs, specialized landscaping, fences, and other structures within the construction work area to its pre-construction appearance or the requirements of the landowner. Restoration work shall be done by personnel familiar with local horticultural and turf establishment practices.
- to the extent possible, preserving mature trees and landscaping while ensuring the safe operation of construction equipment;

4.14.2 Site-Specific Plans

For any residence or commercial/industrial building closer than 25 feet to the construction work area, Keystone shall prepare a site-specific construction plan. The plan shall include:

- a description of construction techniques to be used;
- a dimensioned site plan that shows, at a minimum:
  - the location of the residence or commercial/industrial area in relation to the new pipeline;
  - the edge of the construction work area;
  - the edge of the new permanent construction right-of-way; and
  - other nearby topographical obstacles including landscaping, trees, structures, roads, parking areas, ditches, and streams; and
- a description of how Keystone would ensure that the trench is not excavated until the pipe is ready for installation and that the trench is backfilled immediately after pipe installation.

4.14.3 Landowner Complaint Resolution Procedure

Keystone shall implement a landowner complaint procedure as follows:

- Landowners should first contact the construction spread office to express their concern over restoration or mitigation of environmental damages on their property. The Construction Manager or his designated representative shall respond to the landowner within 24 hours of receipt of the phone call.
- If the landowner has not received a response or is not satisfied with the response, he can contact Keystone's representative at 1-877-880-4881. The landowner should expect a response within 48 hours.

4.15 Fragile Soil Clean-up and Reclamation/Revegetation

4.15.1 General

Fragile soil types are a result of the high percentage of sand content that exists within the surficial soil. Theses soil types exist within regions found in southern South Dakota and central Nebraska and fragile due to their inherent high wind and water erosion potential, low water holding capacity and arid nature of the region, rolling to steep terrain and usually consists of predominantly native prairie landscapes and supports a variety of uses such as livestock grazing, wildlife habitat and recreational opportunities.

4.15.2 Right-of-way Construction

- KXL will educate construction personnel regarding these areas and the necessity to strictly adhere to Project Best Management Practices (BMPs) designed to minimize impacts.

- Minor route re-alignments will be incorporated through these areas to avoid particularly erosion-prone locations, such as ridge tops and existing blowouts as much as practicable.
- KXL will avoid highly saturated areas, such as wetland, to the maximum extent possible.
- Construction soil handling procedures will strive to reduce the width of disturbance to the native prairie landscape by adopting "Trench-line or Blade-width stripping procedures where practicable.
- Topsoil conservation will be conducted on all areas where excavation occurs.
- Topsoil piles will be protected from erosion through matting, mulching, watering or tackifying as deemed practicable.
- Traffic management limitations will be employed on specific areas possessing high erosion potential or sensitive habitat.

4.15.3 Right-of-Way Reclamation

- Native seed mixes will be developed with input from the local NRCS offices and through collaboration with regional experts. All seed will be certified noxious weed-free and will be calculated on a pure live seed (PLS) basis.
- Straw or native prairie hay may be used as mulch, applied to the right-of-way and crimped into the soil to prevent wind erosion. All mulch will be documented as noxious weed-free.
- Land imprinting may be employed to create impressions in the soil, thereby reducing erosion, improving moisture retention and creating micro-sites for seed germination.
- Sediment logs or straw wattles will be used in place of slope breakers (short terraces) that are constructed of soil. Using sediment logs will result in less soil disturbance to the right-of-way.
- Photodegradable matting will be applied on steep slopes or areas prone to extreme wind exposure such as north- or west-facing slopes and ridge tops. Biodegradable pins will be used in place of metal staples to hold the matting in place.
- Keystone will work with landowners to evaluate fencing the right-of-way from livestock, or alternatively, provide compensation to rest a pasture until vegetation can become established. Management concerns such as livestock access to water or movement within a pasture would be incorporated as necessary.

4.15.4 Post-Construction

Keystone is committed to post-construction monitoring and repair and will monitor reclamation on the right-of-way for several years and repair

erosion and reseed poorly revegetated areas as necessary. During monitoring, landowners are informed of our efforts and intentions.

A noxious weed management plan will be established on these lands pending consultation with state and county experts

4.16 Operations and Maintenance

Operations and maintenance programs, such as vegetation management, pipeline maintenance, integrity surveys, and hydrostatic testing, may have an impact on the final reclamation of the right-of-way. To ensure the integrity of the facility and land surface reclamation of the right-of-way is maintained after completion of construction and that regulatory requirements are adhered to during operations, the following measures shall be implemented unless otherwise directed by Keystone in response to site-specific conditions or circumstances. All work shall be conducted in accordance with applicable permits.

- Keystone shall monitor the pipeline right-of-way and all stream crossings for erosion or other potential problems that could affect the integrity of the pipeline. Any erosion identified shall be reclaimed as expediently as practicable by Keystone or by compensating to the landowner to reclaim the area.
- Trench depressions on ditch line that may interfere with natural drainage, vegetation establishment, or land use shall be repaired as expediently as practicable by Keystone or by compensating the landowner to repair the area.
- Post-construction monitoring inspections shall be conducted after the first growing season to determine the success of revegetation, unless otherwise required by permit. Areas which have not been successfully re-established shall be revegetated by Keystone or by compensation of the landowner to reseed the area. If, after the first growing season, revegetation is successful, no additional monitoring shall be conducted unless otherwise required by permit.
- In non-agricultural areas, revegetation shall be considered successful if, upon visual survey, the density and cover of non-nuisance vegetation are similar in density and cover to adjacent undisturbed lands, unless otherwise required by permit.
- In agricultural areas, revegetation shall be considered successful if crop yields are similar to adjacent undisturbed portions of the same field.
- Restoration shall be considered successful if the surface condition is similar to adjacent undisturbed lands, construction debris is removed (unless requested otherwise by the landowner or land managing agency), revegetation is successful, and drainage has been restored.
- Weed control measures shall be implemented as required by any applicable plan and in conjunction with the landowner.
- Keystone shall be responsible for correcting tile line or irrigation system

repairs that fail, provided those repairs were made by Keystone. Keystone shall not be responsible for tile line or irrigation system repairs which Keystone compensated the landowner to perform.

- When requested by owners in cultivated land, Keystone shall monitor the yield of land impacted by construction with the help of agricultural specialists. If yield deficiencies are indicated compared to yields on unaffected land, Keystone will compensate the landowner for reduced yields and shall implement procedures to return the land to equivalent capability.
- In residential areas, landowners may use the right-of-way provided they do not interfere with the rights granted to Keystone. Trees, bushes, structures, including houses, tool sheds, garages, poles, guy wires, catch basins, swimming pools, trailers, leaching fields, septic tanks, and any other objects not easily removable, shall not be permitted on the permanent construction right-of-way without the written permission of Keystone, because they could impair access for maintenance of the pipeline.
- Keystone shall maintain communication with the landowner and tenant throughout the operating life of the pipeline to allow expedient communication of issues and problems as they occur. Keystone shall provide the landowner with corporate contact information for these purposes. Keystone shall work with landowners to prevent excessive erosion on lands disturbed by construction. Reasonable methods shall be implemented to control erosion. These may not be implemented if the property across which the pipeline is constructed is bare cropland which the landowner intends to leave bare until the next crop is planted.
- If the landowner and Keystone cannot agree upon a reasonable method to control erosion on the landowner's property, the recommendations of the appropriate NRCS office shall be considered by Keystone and the landowner.

5.0 DRAIN TILE SYSTEMS

5.1 General

If underground drainage tile is damaged by the pipeline installation, it shall be repaired in a manner that ensures the tile line's proper operating condition at the point of repair. Keystone may elect to negotiate a fair settlement with the affected county or landowner for repair of the damaged drain tile. In the event the landowner chooses to have the damaged tile repaired by Keystone, the Contractor shall follow these guidelines and procedures to identify the location of drain tiles, to mitigate damages to drain tiles prior to and during construction, to repair drain tiles damaged during installation of the pipeline, to inspect the proper repair of drain tiles, and to provide post-construction monitoring to determine any impacts caused by repair of drain tiles. Since all public and private drain tile systems are unique, i.e., varying age, depth of cover, type of material, geometry on the land, etc., it is not possible to develop a standard procedure for resolving each county’s or landowner’s drain tile issues. These guidelines provide a basis on which to develop site specific methodology to mitigate damage and to repair drain tiles affected by construction of the Project. A typical right-of-way layout and typical orientation for crossing drain tiles is provided in Detail 25. Typical header and main

crossovers are provided in Details 26 and 27. Actual measures will be developed based on site-specific information unique to specific installations. However, all work will be conducted in accordance with applicable permits.

5.2 Identification and Classification of Drain Tile Systems

Personnel shall attempt to identify and classify existing drain tile systems by meeting with local public officials and county engineers, and individual private landowners and tenants.

5.2.1 Publicly Owned Drain Tiles

Personnel shall identify and meet with the responsible county or local authority responsible for publicly owned drain tiles. Publicly owned drain tiles shall be identified and documented on the Project's 1" = 2000' USGS quad strip maps and additional data collected for input into an electronic spreadsheet by county, township, range, and section; responsible agency; and size, type, and depth of cover (if known). This data shall be cross-referenced to the centerline survey to be completed by Keystone. Additionally, any public records including maps or easement instruments on the drain tiles shall be acquired as well as any requirements of the local authority for installation of the pipeline.

5.2.2 Privately Owned Drain Tiles

Right-of-way agents shall meet with landowners and tenants of privately owned land along the route. As a minimum, the right-of-way agents shall ascertain the data concerning drain tiles outlined in a landowner questionnaire. The questionnaire requests data concerning: type of drain tile system; size, type of material, and depth of cover; preference for repair of drain tiles; and identification of local drain tile contractors. These data shall be collected into an electronic spreadsheet for utilization by right-of-way personnel in negotiating payments for easements and damages and by engineering or construction personnel for inclusion in specifications for the construction Contractor.

5.3 Mitigation of Damage to Drain Tile Systems

Keystone shall undertake mitigation measures to reduce damage to publicly and privately owned drain tile systems prior to and during installation of the pipeline.

5.3.1 Non-interference with Drain Tile

The Project shall be installed at a depth of cover and elevation so as not to interfere with the elevation and grade of existing drain tiles where practicable. Where not practicable, Keystone shall pursue alternative mitigation measures mutually acceptable to the landowner and jurisdictional agencies. Typically, the pipeline shall be installed below the elevation of drain tiles with a minimum clearance of 12 inches. Detail 25, Typical Right-of-Way Layout/Soil Handling, represents a typical drain tile crossing by the

pipeline with additional temporary work space to facilitate handling of topsoil and trench spoil created by the additional depth of cover for the pipeline.

5.3.2 Non-disturbance of Drain Tile Mains

Publicly owned and privately owned drain tile mains shall be identified through the processes identified in Section 5.2. Drain tile mains are essential to the overall drainage system of a land area and if disturbed, may require excessive pumping/dewatering of the pipe trench unless temporarily repaired and maintained until permanently repaired.

Keystone shall review drain tile mains and consider their size, flow rate, type of material, depth of cover, and geographic location. If determined to be practicable and reasonable for construction, the drain tile main shall not be cut and repaired during mainline installation (a pipe section shall be left out and installed by a tie-in crew without damaging the drain tile main).

5.3.3 Relocation or Replacement of Existing Drain Tiles Prior to Construction

In many instances, drain tile systems that have been installed after the installation of adjacent existing pipelines were installed with “headers” parallel to the existing pipeline with periodic jump overs as depicted on Detail 26, Header/Main Crossovers of Keystone XL Pipeline. The distance of these headers from the existing pipeline may vary.

Some of these drain tile headers may be most effectively relocated and/or replaced to the east of the Project. The existing header will be capped and made into a single drain tile as depicted on Detail 27, Relocate/Replace Drainage Header/Main. This could reduce the number of drain tile crossings on a particular landowner’s property by a significant quantity, thereby reducing the risk that repairs will fail.

5.3.4 Future Drain Tiles/Systems

Keystone shall attempt to determine where public agencies and private landowners or tenants are proposing to install drain tile systems in the future. These locations shall be input into an electronic spreadsheet by county, township, range, and section; landowner or responsible public agency; and proposed size and depth of cover. Keystone shall endeavor to construct the pipeline at a depth and elevation to accommodate the future installation of the proposed drain tile systems.

5.3.5 Other Mitigation Measures

Other mitigation measures that may be implemented during installation of the pipeline are as follows:

- not removing topsoil from the working side of the construction right-of-way to prevent crushing of drain tile by heavy equipment;
- spreading ditch and spoil side topsoil (not subsoil) over the working side to provide additional soil depth to protect existing drain tiles;

- restricting the work of the pipe lower in crew if ground conditions are too wet to adequately support the heavy equipment;
- limiting travel of heavy equipment the working lane of the construction right-of-way where possible;
- limiting travel of heavy equipment to one pass over the drain tile per work crew where possible; and
- removing and replacing topsoil during drain tile replacement should tile be crushed on the working side of the right-of-way.

5.4 Responsibility for Repair of Drain Tile Systems

Temporary and permanent drain tile repairs shall be the responsibility of the Contractor. The physical repairs shall be made by qualified and experienced drain tile repair personnel.

5.4.1 Local Drain Tile Contractor Repair

Keystone shall identify and qualify local drain tile contractors in the geographical area of the pipeline route from interviews with local public officials, landowners, tenants, and drain tile contractors. The preferred responsibility for permanent repair of drain tiles shall be for the pipeline Contractor to subcontract the supervision and repair to local reputable drain tile contractors acceptable to the landowners and tenants.

5.4.2 Pipeline Contractor Repair

In the event local drain tile contractors are not available to subcontract the supervision and repair, permanent repair shall be made with the Contractor's supervision, equipment, and labor.

5.4.3 Landowner/Tenant Repair

The landowner or tenant may agree to take responsibility for the permanent repair of his drain tiles if not precluded by regulatory agency. The landowner or tenant shall be requested to ensure his ability to coordinate and complete the drain tile repair in a timely manner to allow the pipeline Contractor to completely backfill the damaged drain tile for repair by landowner/tenant in the immediate future. Keystone shall require that its representative be present to ensure the permanent drain tile repairs are made in accordance with the minimum requirements of this manual.

5.5 Drain Tile Repairs

The Contractor shall endeavour to locate all tile lines within the construction right-of-way prior to and during installation so repairs can be made if necessary.

5.5.1 Temporary Repairs During Construction

Drain tiles damaged or cut during the excavation of the trench shall be marked with a lath and ribbon in the spoil bank. Care shall be taken to

locate markers where the chance of disturbance shall be minimized and a written record maintained of each drain tile crossing. A work crew following the pipeline trench crew shall complete a temporary repair to allow continuing flow. Detail 28, Temporary Drain Tile Repair, depicts the materials and installation procedure to complete the temporary repair. If a drain tile line shall not be temporarily repaired, the open ends of the drain tile shall be screened to prevent entry of foreign materials and small animals.

5.5.2 Permanent Repairs

Permanent repairs shall be made for all drain tiles damaged by installation of the pipeline.

5.5.2.1 Ditch Line Only Repairs

If water is flowing through a damaged tile line, the tile line shall be immediately and temporarily repaired until such time that permanent repairs can be made. If tile lines are dry and water is not flowing, temporary repairs are not required if the permanent repair is made within 7 days of the time damage

occurred. The temporary repair shall be removed just prior to lowering in the pipeline.

Drain tiles must be permanently repaired before the pipeline trench is backfilled and within 14 days of construction completion, weather and soil conditions permitting. All tile lines shall be repaired with materials of the same or better quality as that which was damaged. The drain tile marker shall not be removed until the tile repairs have been inspected, approved, and accepted by Keystone's inspectors, the county inspectors, where applicable, and the landowner or tenant. Detail 29, Permanent Repair Method of Drain Tiles, depicts the minimum materials and installation procedure to complete a permanent repair.

5.5.2.2 Ditch Line and Temporary Work Space Repairs

Prior to making the permanent drain tile repair, the Contractor shall probe a segmented sewer rod with a plug that is not more than 15% smaller than the internal diameter of the drain tile to determine if additional damage has occurred to the drain tile. If the probe does not freely insert into the drain tile across the temporary workspace of pipeline construction, the Contractor shall excavate, expose, and repair the damaged drain tile to its original or better condition.

5.6 Inspection/Acceptance of Drain Tile Repairs

Drain tile repairs shall be inspected by Keystone construction inspectors, county inspectors, as applicable, and the landowner or tenant or his representative.

Keystone shall designate inspector(s) for the sole purpose and responsibility for inspection of all repairs of drain tiles. These inspectors shall be, if possible, employed from local drain tile installation contractors, local farmers with extensive drain tile experience, or previously employed or retired employees of local jurisdictions familiar with drain tile installation and repair. In the event that a sufficient quantity of inspectors from these sources is not available, Keystone shall conduct in-the-field training seminars on drain tile repair for additional inspection personnel.

Inspection personnel shall observe the permanent repair of all drain tiles to ensure the replacement drain tile is: (1) the proper size and type; (2) installed at the proper grade; (3) properly supported and backfill beneath the drain tile is properly placed and compacted; and (4) properly tied into the existing drain tile. The inspection shall be documented on the Drain Tile Inspection Report Form.

A drain tile repair shall not be accepted until Keystone's construction inspector and the landowner or tenant or designated representative approves the inspection form.

6.0 WETLAND CROSSINGS

6.1 General

Wetland boundaries shall be clearly marked in the field with signs and/or highly visible flagging during construction.

In the event a waterbody crossing is located within or adjacent to a wetland crossing, the measures of both Section 6 - Wetland Crossings and Section 7 - Waterbodies and Riparian Lands shall be implemented to the extent practicable.

A dry wetland is defined in Section 6.5.1. In these wetlands, equipment can traverse the wetland without the support of mats or timber riprap.

A standard wetland environment typically has soils that are saturated and non-cohesive. Difficult trenching conditions are likely resulting in excessively wide trenches. In these wetland environment types, supplemental support in the form of timber riprap or prefabricated equipment mats may be required for construction equipment to safely and efficiently operate.

A flooded wetland involves the presence of standing water over much of the wetland area. Equipment typically cannot traverse the wetland and must generally move around that portion of the area. Access is typically limited to marsh backhoes or equipment working from flexifloats or equivalents.

Keystone may allow modification of the following specifications as necessary to accommodate site-specific conditions or procedures. Any modifications must still comply with all applicable regulations and permits.

6.2 Easement and Workspace

The Contractor shall maintain wetland boundary markers during construction in all areas and until permanent seeding is complete in non-cultivated areas.

The width of the construction right-of-way shall be reduced to 85 feet or less in standard wetlands unless non-cohesive soil conditions require utilization of a greater width and unless the USACE or other regulatory authority authorizes a greater width.

The Contractor shall locate extra work areas (such as staging areas and additional spoil storage areas) shall be at least 10 feet away from wetland boundaries, where topographic conditions permit.

The Contractor shall limit clearing of vegetation between extra work areas and the edge of the wetland to the construction right-of-way and limit the size of extra work areas to the minimum needed to construct the wetland crossing.

6.3 Vehicle Access and Equipment Crossing

The only access roads, other than the construction right-of-way, that the Contractor shall use in wetlands are those existing public roads and private roads acquired by Keystone from the landowner shown on the construction drawings.

To the extent practicable, the Contractor's construction equipment operating in saturated wetlands or wetlands with standing water shall be limited to that needed to clear the construction right-of-way, dig the trench, fabricate and install the pipeline, backfill the trench, and restore the construction right-of-way.

If equipment must operate within a wetland containing standing water or saturated soils, the Contractor shall use the following methods for equipment access unless otherwise approved by Keystone based on site-specific conditions:

- wide-track or balloon-tire construction equipment; and
- conventional equipment operated from timber and slash (riprap) cleared from the right-of-way, timber mats, or prefabricated equipment mats.

6.4 Temporary Erosion and Sediment Control

The Contractor shall install sediment barriers across the entire construction right-of-way immediately upslope of the wetland boundary at all standard wetland crossings, as necessary, to prevent sediment flow into the wetland. Sediment barriers must be properly maintained by the Contractor throughout construction and reinstalled as necessary. In the travel lane, these may incorporate removable sediment barriers or drivable berms. Removable sediment barriers can be removed during the construction day, but shall be re-installed after construction has stopped for the day or when heavy precipitation is imminent. The Contractor shall maintain sediment barriers until replaced by permanent erosion controls or restoration of adjacent upland areas is complete. The Contractor shall not install sediment barriers at wetlands designated as "dry" unless otherwise specified by Keystone.

Where standard wetlands are adjacent to the construction right-of-way, the Contractor shall install sediment barriers along the edge of the construction right-of-way as necessary to prevent a sediment flow into the wetland.

6.5 Wetland Crossing Procedures

The following general mitigative procedures shall be followed by the Contractor in all wetlands unless otherwise approved or directed by Keystone based on site-specific conditions. All work shall be conducted in accordance with applicable permits.

- limit the duration of construction-related disturbance within wetlands to the extent practicable;

- use no more than two layers of timber riprap to stabilize the construction right-of-way;
- cut vegetation off at ground level leaving existing root systems in place and remove it from the wetland for disposal;
- limit pulling of tree stumps and grading activities to directly over the trench line unless safety concerns require the removal of stumps from the working-side of the construction ROW;
- segregate a maximum of 12 inches of topsoil from the area disturbed by trenching in dry wetlands, where practicable;
- restore topsoil to its approximate original stratum, after backfilling is complete;
- dewater the trench in a manner to prevent erosion and heavily silt-laden flowing directly into any wetland or waterbody;
- remove all timber riprap and prefabricated equipment mats upon completion of construction;
- locate hydrostatic test manifolds outside wetlands and riparian areas to the maximum extent practicable;
- prohibit storing hazardous materials, chemicals, fuels, lubricating oils, or perform concrete coating activities in a wetland, or within 100 feet of any wetland boundary;
- perform all equipment maintenance and repairs upland locations at least 100 feet from waterbodies and wetlands;
- avoid parking equipment overnight within 100 feet of a watercourse or wetland;
- prohibit washing equipment in streams or wetlands;
- install trench breakers and/or seal the trench to maintain the original wetland hydrology, where the pipeline trench may drain a wetland;
- attempt to refuel all construction equipment in an upland area at least 100 feet from a wetland boundary (otherwise follow the procedures outlined in Section 3); and
- avoid sand blasting in wetlands to the extent practicable. If sandblasting is performed within a wetland, the Contractor shall place a tarp or suitable material in such a way as to collect as much waste shot as possible and dispose of the collected waste. The Contractor shall clean up all visible deposits of wastes and dispose of the waste at an approved disposal facility.

Specific procedures for each type of wetland crossing method are listed below and shall be designated on the construction drawings but may be modified depending on site conditions at the time of construction. All work shall be conducted in accordance with applicable permits.

6.5.1 Dry Wetland Crossing Method

Topsoil shall be segregated. Pipe stringing and fabrication may occur within the wetland adjacent to the trench line or adjacent to the wetland in a designated extra workspace.

The dry wetland crossing procedure depicted in Detail 8 shall be used where this type of wetland is identified on the construction drawings. The following are exceptions to standard wetland crossing methods:

- The width of the construction right-of-way for upland construction is maintained through the wetland.
- Where extra work areas (such as staging areas and additional spoil storage areas) are designated on the construction drawings, they may be placed no closer than 10 feet from the wetland's edge.
- Seeding requirements for agricultural lands shall be applied to farmed wetlands.

6.5.2 Standard Wetland Crossing Method

Topsoil stripping is impracticable due to the saturated nature of the soil. Pipe stringing and fabrication may occur within the wetland adjacent to the trench line or adjacent to the wetland in a designated extra workspace. Based upon the length of a standard wetland crossing and presence of sufficient water to float the pipe, the Contractor may elect to install a standard wetland crossing utilizing the “push/pull” method.

The standard wetland crossing procedure depicted in Detail 9 shall be used where this type of wetland is identified on the construction drawings.

Procedures unique to standard wetlands include:

- limiting construction right-of-way width to a maximum of 85 feet unless site conditions warrant a wider width;
- utilizing low-ground-pressure construction equipment or support equipment on timber riprap or timber mats; and
- installing sediment barriers across the entire right-of-way where the right-of-way enters and exits the wetland.

6.5.3 Flooded Push/Pull Wetland Crossing Method

Where standing surface water or high groundwater levels make trenching difficult, trench widths up to 35 feet are common. Topsoil stripping is impossible due to the flooded conditions. Pipe stringing and fabrication is required adjacent to the wetland in a designated extra workspace. Using floatation devices, the pipe string is pushed and pulled from the extra workspace to the trench.

The Push/Pull wetland crossing procedure as depicted in Detail 10 shall be used where water is sufficient to float the pipeline in the trench and other site conditions allow.

Clean metal barrels or Styrofoam floats may be used to assist in the flotation of the pipe. Metal banding shall be used to secure the barrels or floats to the pipe. All barrels, floats, and banding shall be recovered and removed upon completion of lower in. Backfill shall not be allowed before recovery of barrels, floats, and banding.

6.6 Restoration and Reclamation

All timber riprap, timber mats, and prefabricated equipment mats and other construction debris shall be removed upon completion of construction. As much as is feasible, the Contractor shall replace topsoil and restore original contours with no crown over the trench. Any excess spoil shall be removed from the wetland. The Contractor shall stabilize wetland edges and adjacent upland areas by establishing permanent erosion control measures and revegetation, as applicable, during final clean up.

For each standard wetland crossed, the Contractor shall install a permanent slope breaker and trench breaker at the base of slopes near the boundary between the wetland and adjacent upland areas. The Contractor shall locate the trench breaker immediately upslope of the slope breaker.

The Contractor shall not use fertilizer, lime, or mulch in wetlands unless required in writing by the appropriate land management agency.

All wetland areas within conservation lands or easements will be restored to a level consistent with any additional criteria established by the relevant managing agency.

7.0 WATERBODIES AND RIPARIAN AREAS

7.1 General

The Contractor shall comply with requirements of all permits issued for the waterbody crossings by federal, state or local agencies.

Waterbody includes any areas delineated as jurisdictional natural or artificial stream, river, or drainage, and other permanent waterbodies such as ponds and lakes:

- Minor Waterbody includes all waterbodies less than or equal to 10 feet wide at the water's edge at the time of construction.
- Intermediate Waterbody includes all waterbodies greater than 10 feet wide but less than or equal to 100 feet wide at the water's edge at the time of construction.
- Major Waterbody includes all waterbodies greater than 100 feet wide at the water's edge at the time of construction.

In the event a waterbody crossing is located within or adjacent to a wetland crossing, the Contractor, to the extent practicable, shall implement the provisions of both Section 6 - Wetland Crossings and Section 7 - Waterbodies and Riparian Areas.

The Contractor shall supply and install advisory signs in a readily visible location along the construction right-of-way at a distance of approximately 100 feet on each side of the crossing and on all roads which provide direct construction access to waterbody crossing sites. Signs shall be supplied, installed, maintained, and then removed upon completion of the Project. Additionally, signs shall be supplied and installed by the Contractor on all intermediate and major waterbodies accessible to recreational boaters warning boaters of pipeline construction operations.

The Contractor shall not store hazardous materials, chemicals, fuels, lubricating oils, or perform concrete coating within 100 feet of any waterbody. The Contractor shall not refuel construction equipment within 100 feet of any waterbody. If the Contractor must refuel construction equipment within 100 feet of a waterbody, it must be done in accordance with the requirements outlined in Section 3. All equipment maintenance and repairs will be performed in upland locations at least 100 feet from waterbodies and wetlands. All equipment parked overnight shall be at least 100 feet from a watercourse or wetland, if possible. Equipment shall not be washed in streams or wetlands.

Throughout construction, the Contractor shall maintain adequate flow rates to protect aquatic life and to prevent the interruption of existing downstream uses.

Keystone may allow modification of the following specifications as necessary to accommodate specific situations or procedures. Any modifications must comply with all applicable regulations and permits. Keystone will complete site-specific

crossing plans for certain waterbody crossings if required by the applicable regulatory agencies during federal or state permitting processes.

7.2 Easement and Work Space

The permanent easement, temporary work space, additional temporary work space, and any special restrictions shall be depicted on the construction drawings. The work shall be contained within these areas and be limited in size to the minimum required to construct the waterbody crossing.

The Contractor shall locate all extra work areas (such as staging areas and additional spoil storage areas) at least 10 feet from the water's edge if practicable.

At all waterbody crossings, the Contractor shall install flagging across the construction right-of-way at least 10 feet from the water's edge prior to clearing and ensure that riparian cover is maintained where practicable during construction.

7.3 Vehicle Access and Equipment Crossings

The Contractor shall inspect equipment for fluid leaks prior to entering or crossing over waterbodies.

Equipment bridges shall be installed at all flowing waterbodies and as directed by the Keystone EI. Equipment crossings shall be constructed as described in Details 16, 17
and/or 18.

Equipment crossings shall be perpendicular to drainage bottoms wherever possible.

Erosion and sediment control barriers will be installed and maintained around vehicle access points as necessary to prevent sediment from reaching the waterway.

The Contractor shall be responsible for the installation, maintenance, and removal of all temporary access crossings including portable bridges, bridges made from timber or mats, flumes, culverts, sand bags, subsoil, coarse granular material, and riprap.

The Contractor shall ensure that culverts and flumes are sized and installed of sufficient diameter to accommodate the existing flow of water and those that may potentially be created by sudden runoffs. Flumes shall be installed with the inlet and outlet at natural grade if possible.

Where bridges, culverts or flumes are installed across the work area, the Contractor shall be responsible for maintaining them (e.g. preventing collapse, clogging or tilting). All flumes and culverts shall be removed as soon as possible upon completion of construction.

The width of the temporary access road across culverts and flumes and the design of the approaches and ramps shall be adequate for the size of vehicle and equipment access required. The ramps shall be of sufficient depth and constructed to prevent collapse of the flumes, and the approaches on both sides of the flume shall be feathered.

Where culverts are installed for access, the culvert shall be of sufficient length to convey the stream flow through the construction zone.

The Contractor shall maintain equipment bridges to prevent soil from entering the waterbody.

7.4 Waterbody Crossing Methods

Construction methods pertinent to waterbody crossings are presented below. Selection of the most appropriate method at each crossing shall be depicted on the construction drawings but may be amended or changed based on site-specific conditions (i.e., environmental sensitivity of the waterbody, depth, and rate of flow, subsurface soil conditions, and the expected time and duration of construction) at the time of crossing. Construction will involve dry-ditch techniques at crossings where the timing of construction does not adequately protect environmentally sensitive waterbodies, as determined by the appropriate regulatory authority. Where required, horizontal directional drilling (HDD) will be used at designated major and sensitive waterbodies crossings. Each waterbody crossing shall be accomplished using one of the following construction methods:

- Non-flowing Open Cut Crossing Method - (Detail 11)
- Flowing Open Cut Crossing Method – Minor, Intermediate or Major Waterbody - (Detail 12)
- Flowing Stream Crossing – Dry Flume Method - (Detail 13)
- Flowing Stream Crossing – Dry Dam-and-Pump Method - (Detail 14)
- Horizontal Directional Drill Crossing - (Detail 15)
- Horizontal Bore Crossing - (Detail 21)

In conjunction with the appropriate jurisdictional agency, Keystone will develop specific crossing plans for major water bodies that contain recreationally or commercially important fisheries, or are classified as special use. Keystone will consult with state fisheries agencies with respect to applicable construction windows for each crossing and develop specific construction and crossing methods for open cuts in conjunction with USACE permitting and USFWS consultation.

7.4.1 Non-flowing Open Cut Crossing Method

The Contractor shall utilize the Non-flowing Open Cut Crossing Method (Detail 11) for all waterbody crossings (ditches, gullies, drains, swales, etc.) with no perceptible flow at the time of construction. Should site conditions change and the waterbody is flowing at the time of

construction, the Contractor shall install the crossing utilizing the Flowing Open Cut Crossing Method (Detail 12) unless otherwise approved by Keystone.

7.4.2 Flowing Open Cut Crossing Method of Minor, Intermediate, and Major Waterbodies

For minor waterbody crossings, except where the flume method is used, the Contractor shall complete construction in the waterbody (not including blasting, if required) as shown on Detail 12 within 24 hours if practicable.

For intermediate waterbodies, the Contractor shall attempt to complete trenching and backfill work within the waterbody (not including blasting if required) within 48 hours if practicable as shown on Detail 12.

The Contractor shall construct each major waterbody crossing in accordance with a site-specific plan as shown in the construction drawings. The Contractor shall complete in-stream construction activities as expediently as practicable.

7.4.3 Flowing Stream Crossing – Dry Flume Method

Where required, the Contractor shall utilize the Flowing Open Cut Crossing – Dry Flume Method as shown on Detail 13 with the following "dry ditch" techniques:

- Flume pipe shall be installed after blasting (if necessary), but before any trenching.
- Sand bag, sand bag and plastic sheeting diversion structure, or equivalent shall be used to develop an effective seal and to divert stream flow through the flume pipe (some modifications to the stream bottom may be required in order to achieve an effective seal).
- Flume pipe(s) shall be aligned to prevent bank erosion and streambed scour.
- Flume pipe shall not be removed during trenching, pipe laying, or backfilling activities, or initial streambed restoration efforts.
- All flume pipes and dams that are not also part of the equipment bridge shall be removed as soon as final clean up of the stream bed and bank is complete.

7.4.4 Flowing Stream Crossing – Dry Dam-and-Pump Method

Where specified in the construction drawings, the Contractor shall utilize the Flowing Open Cut Crossing – Dry Dam-and-Pump Method as shown on Detail 14. The dam-and-pump crossing method shall meet the following performance criteria:

- sufficient pumps to maintain 1.5 times the flow present in the stream at the time of construction;

- at least one back up pump available on site;
- dams constructed with materials that prevent sediment and other pollutants from entering the waterbody (e.g., sandbags or clean gravel with plastic liner);
- screen pump intakes installed;
- streambed scour prevented at pump discharge; and
- dam and pumps shall be monitored to ensure proper operation throughout the waterbody crossing.

7.4.5 Horizontal Directional Drill Crossings

Where required, the horizontal directional drill method as shown on Detail 15 shall be utilized for designated major and sensitive waterbodies. The Contractor shall construct each directional drill waterbody crossing in accordance with a site specific plan as shown in the construction drawings.

Drilling fluids and additives utilized during implementation of a directional drill shall be non-toxic to the aquatic environment.

The Contractor shall develop a contingency plan to address a frac-out during a directional drill. The plan shall include instructions for monitoring during the directional drill and mitigation in the event that there is a release of drilling fluids. Additionally, the waterbody shall be monitored downstream by the Contractor for any signs of drilling fluid.

The Contractor shall dispose of all drill cuttings and drilling mud as permitted by the appropriate regulatory authority at a Keystone-approved location. Disposal options may include spreading over the construction right-of-way in an upland location approved by Keystone or hauling to an approved licensed landfill or other site approved by Keystone.

7.4.6 Horizontal Bore Crossings

Where required, the horizontal bore method as shown on Detail 21 shall be utilized for crossing waterbodies. The Contractor shall construct each horizontal bore waterbody crossing in accordance with a site specific plan as shown in the construction drawings.

7.5 Clearing

Except where rock is encountered and at non-flowing open cut crossings, all necessary equipment and materials for pipe installation must be on site and assembled prior to commencing trenching in a waterbody. All staging areas for materials and equipment shall be located at least 10 feet from the waterbody edge. The Contractor shall preserve as much vegetation as possible along the waterbody banks while allowing for safe equipment operation.

Clearing and grubbing for temporary vehicle access and equipment crossings shall be carefully controlled to minimize sediment entering the waterbody from the construction right-of-way.

Clearing and grading shall be performed on both sides of the waterbody prior to initiating any trenching work. All trees shall be felled away from watercourses.

Plant debris or soil inadvertently deposited within the high water mark of waterbodies shall be promptly removed in a manner that minimizes disturbance of the waterbody bed and bank. Excess floatable debris shall be removed above the high water mark from areas immediately above crossings.

Vegetation adjacent to waterbody crossings by horizontal directional drill or boring methods shall not be disturbed except by hand clearing as necessary for drilling operations.

7.6 Grading

The construction right-of-way adjacent to the waterbody shall be graded so that soil is pushed away from the waterbody rather than towards it whenever possible.

In order to minimize disturbance to woody riparian vegetation within extra workspaces adjacent to the construction right-of-way at waterbody crossings, the Contractor shall minimize grading and grubbing of waterbody banks. To the extent practicable, grubbing shall be limited to the ditch line plus an appropriate width to accommodate safe vehicle access and the crossing.

7.7 Temporary Erosion and Sediment Control

The Contractor shall install and maintain sediment barriers across the entire construction right-of-way at all flowing waterbody crossings.

The Contractor shall install sediment barriers immediately after initial disturbance of the waterbody or adjacent upland. Sediment barriers must be properly maintained throughout construction and reinstalled as necessary (such as after backfilling of the trench) until replaced by permanent erosion controls or restoration of adjacent upland areas is complete.

Where waterbodies are adjacent to the construction right-of-way, the Contractor shall install and maintain sediment barriers along the edge of the construction right-of-way as necessary to contain spoil and sediment within the construction right-of-way.

7.8 Trenching

The following requirements apply to all waterbody crossings except those being installed by the non-flowing open cut crossing method.

All equipment and materials shall be on site before trenching in the active channel of all minor waterbodies containing state-designated fisheries, and in

intermediate and major waterbodies. All activities shall proceed in an orderly manner without delays until the trench is backfilled and the stream banks stabilized. The Contractor shall not begin in-stream activity until the in-stream pipe section is complete and ready to be installed in the waterbody.

The Contractor shall use trench plugs at the end of the excavated trench to prevent the diversion of water into upland portions of the pipeline trench and to keep any accumulated upland trench water out of the waterbody. Trench plugs must be of sufficient size to withstand upslope water pressure.

The Contractor shall conduct as many in-stream activities as possible from the banks of the waterbodies. The Contractor shall limit the use of equipment operating in waterbodies to that needed to construct each crossing.

The Contractor shall place all spoil from minor and intermediate waterbody crossings and upland spoil from major waterbody crossings in the construction right-of-way at least 10 feet from the water's edge or in additional extra work areas. No trench spoil, including spoil from the portion of the trench across the stream channel, shall be stored within a waterbody unless the crossing cannot be reasonably completed without doing so.

The Contractor shall install and maintain sediment barriers around spoil piles to prevent the flow of spoil into the waterbody.

Spoil removed during ditching shall be used to backfill the trench usually with a backhoe, clamshell, or a dragline working from the waterbody bank. Sand, gravel, rockshield, or fill padding shall be placed around the pipe where rock is present in the channel bottom.

7.9 Pipe Installation

The following requirements apply to all waterbody crossings except those being installed by the non-flowing open cut crossing method.

A "free stress" pipe profile shall be used at all minor, intermediate, and major waterbodies with gradually sloping stream banks. The "box bend" pipe profile may be used for intermittent and major waterbodies with steep stream banks.

The trench shall be closely inspected to confirm that the specified cover and adequate bottom support can be achieved, and shall require Keystone approval prior to the pipe being installed. Such inspections shall be performed by visual inspection and/or measurement by a Keystone representative. In rock trench, the ditch shall be adequately padded with clean granular material to provide continuous support for the pipe.

The pipe shall be pulled into position or lowered into the trench and shall, where necessary, be held down by suitable negative buoyancy control, as-built recorded and backfilled immediately to prevent the pipe from floating.

The Contractor shall provide sufficient approved lifting equipment to perform the pipe installation in a safe and efficient manner. As the coated pipe is lowered in,

it shall be prevented from swinging or rubbing against the sides of the trench. Only properly manufactured slings, belts, and cradles suitable for handling coated pipe shall be used. All pipes shall be inspected for coating flaws and/or damage as it is being lowered into the trench. Any damage to the pipe or coating shall be repaired.

7.10 Backfilling

The following requirements apply to all waterbody crossings except those being installed by the non-flowing open cut crossing method.

Trench spoil excavated from waterbodies shall be used to backfill the trench across waterbodies.

After lowering in is complete, but before backfilling, the line shall be re-inspected to ensure that no skids, brush, stumps, trees, boulders, or other debris is in the trench. If discovered, such materials or debris shall be removed from the trench prior to backfilling.

For each major waterbody crossed, the Contractor shall install a trench breaker at the base of slopes near the waterbody unless otherwise directed by Keystone based on site specific conditions. The base of slopes at intermittent waterbodies shall be assessed on site and trench breakers installed only where necessary.

Slurred muck or debris shall not be used for backfill. At locations where the excavated native material is not acceptable for backfill or must be supplemented, the Contractor shall provide granular material approved by Keystone.

If specified in the construction drawings, the top of the backfill in the stream shall be armored with rock riprap or bio-stabilization materials as appropriate.

7.11 Stabilization and Restoration of Stream Banks and Slopes

The Contractor will restore the contours of the bed and banks of all waterways immediately after pipe installation and backfill, except over the travel lane. Travel lanes and bridges may stay in place until hydrostatic testing and cleanup are complete. All materials used to support construction activities will be removed from waterbodies and wetlands, including, but not limited to, flumes, mats, plastic sheeting, and sandbags.

The stream bank contour shall be re-established. All debris shall be removed from the streambed and banks. Stream banks shall be stabilized and temporary sediment barriers shall be installed within 24 hours of completing the crossing if practicable.

Approach slopes shall be graded to an acceptable slope for the particular soil type and surface run off controlled by installation of permanent slope breakers. Where considered necessary, the integrity of the slope breakers shall be ensured by lining with erosion control blankets.

Immediately following reconstruction of the stream banks, the Contractor shall install seed and flexible channel liners on waterbody banks as shown in Detail 19.

If the original stream bank is excessively steep and unstable or flow conditions are severe, or if specified on the construction drawings, the banks shall be stabilized with rock riprap, gabions, stabilizing cribs, or bio-stabilization measures to protect backfill prior to reestablishing vegetation.

Stream bank riprap structures shall consist of a layer of stone, underlain with approved filter fabric or a gravel filter blanket in accordance with Detail 20. Riprap shall extend from the stabilized streambed to the top of the stream bank. Where practicable, native rock shall be utilized.

Bio-stabilization techniques which may be considered for specific crossings are shown in Details 23 and 24.

The Contractor shall remove equipment bridges as soon as possible after final clean up.

8.0 HYDROSTATIC TESTING

8.1 Testing Equipment Location

The Contractor shall provide for the safety of all pipeline construction personnel and the general public during hydrostatic test operations by placing warning signs in populated areas.

The Contractor shall locate hydrostatic test manifolds 100 feet outside wetlands and riparian areas to the maximum extent practicable.

8.2 Test Water Source and Discharge Locations

Keystone is responsible for acquiring all permits required by federal, state and local agencies for procurement of water and for the discharge of water used in the hydrostatic testing operation. Keystone shall provide the Contractor with a copy of the appropriate withdrawal/discharge permits for hydrostatic test water. The Contractor shall keep water withdrawal/discharge permits on site at all times during testing operations.

Any water obtained or discharged shall be in compliance with permit notice requirements and with sufficient notice for Keystone's Testing Inspector to make water sample arrangements prior to obtaining or discharging water. Keystone will obtain water samples for analysis from each source before filling the pipeline. In addition, water samples will be taken prior to discharge of the water, as required by state and federal permits.

In some instances sufficient quantities of water may not be available from the permitted water sources at the time of testing. Withdrawal rates may be limited as stated by the permit. Under no circumstances shall an alternate water source be used without prior authorization from Keystone.

The Contractor shall be responsible for obtaining any required water analyses from each source to be used in sufficient time to have a lab analysis performed prior to any filling operations. The sample bottle shall be sterilized prior to filling with the water sample. The analysis shall determine the pH value and total suspended solids. Each bottle shall be marked with:

- source of water with pipeline station number;
- date taken;
- laboratory order number; and
- name of person taking sample.

Staging/work areas for filling the pipeline with water will be located a minimum of 100 feet from the waterbody or wetland boundary if topographic conditions permit. The Contractor will install temporary sediment filter devices adjacent to all streams to prevent sediments from leaving the construction site.

The Contractor shall screen the intake hose to prevent the entrainment of fish or debris. The hose shall be kept at least 1 foot off the bottom of the waterbody. Refueling of construction equipment shall be conducted a minimum distance of 100 feet from the stream or a wetland. Pumps used for hydrostatic testing within 100 feet of any waterbody or wetland shall be operated and refueled in accordance with Section 3.

During hydrostatic test water withdrawals, the Contractor will maintain adequate flow rates in the waterbody to protect aquatic life and provide for downstream uses, in compliance with regulatory and permit requirements.

The Contractor shall not use chemicals in the test water. The Contractor shall not discharge any water containing oil or other substances that are in sufficient amounts as to create a visible color film or sheen on the surface of the receiving water.

Selected road, railroad, and river crossing pipe sections may be specified to be pre-tested for a minimum of 4 hours. The water for pre-testing of any road and railroad crossings shall be hauled by a tanker truck from an approved water source. Water for pre-testing of a river crossing may be hauled or taken from the respective river if it is an approved water source. Since the volume of water utilized in these pre-tests shall be relatively small, the water shall be discharged overland along the construction right-of-way and allowed to soak into the ground utilizing erosion and sediment control mitigative measures.

Selection of final test water sources will be determined based on site conditions at the time of construction and applicable permits.

8.3 Filling the Pipeline

After final positioning of the pipe, the Contractor shall fill the pipe with water. Pipe ends shall not be restrained during the fill. The fill pump shall be set on a metal catch pan of sufficient dimensions to contain all leaking lubricants or fuel and prevent them from entering the water source. The suction inlet must be placed in a screened enclosure located at a depth that shall not allow air to be drawn in with the water. The screened enclosure shall be such that the fill water is free of organic or particulate matter.

The Contractor shall provide a filter of the back flushing or cartridge type with a means of cleaning without disconnecting the piping. The filter shall have the specifications of 100 mesh screen. If the cartridge type is used, a sufficient quantity of cartridges shall be on hand at the filter location. The Contractor shall install the filter between the fill pump and the test header. The Contractor shall be responsible for keeping the back flush valve on the filter closed during the filling operation. The Contractor shall be responsible for the proper disposal of materials back flushed from the filter or filter cartridges. The Contractor shall not be allowed to back flush the filter into the stream or other water source.

During water-filling of the pipeline, the Contractor shall employ fill pumps capable of injecting water into the pipeline at a maximum rate of approximately 0.7 to 1.0 mile per hour, except as limited by permits or the maintenance of adequate flow rates in the waterbody, as follows:

Nominal OD	Max GPM
36”	3000

The Contractor shall maintain flow rates as necessary to protect aquatic life, provide for all waterbody uses, and provide for downstream withdrawals of water by existing users.

In areas where zebra mussels are known to occur, all equipment used during the hydrostatic test withdrawal and discharge will be thoroughly cleaned before being used at subsequent hydrostatic test locations to prevent the transfer of zebra mussels or their larvae (veligers) to new locations.

8.4 Dewatering the Pipeline

The Contractor shall comply with state-issued NPDES permits for discharging test water.

The Contractor shall not discharge any water containing oil or other substances that are in sufficient amounts as to create a visible color film on the surface of the receiving water.

The Contractor shall not discharge into state-designated exceptional value waters, waterbodies which provide habitat for federally listed threatened or endangered species, or waterbodies designated as public water supplies, unless appropriate federal, state, and local permitting agencies grant written permission.

To avoid impacts from introduced species, no inter-basin transfers (discharge) of hydrostatic test water will occur.

The discharge operation will be monitored and water samples will be taken prior to the beginning of the discharge to ensure that it complies with the Project and permit requirements. If required by state permits, additional water quality testing will be conducted during discharge, in accordance with permit conditions.

The Contractor shall calculate, record, and provide to Keystone the day, date, time, location, total volume, maximum rate, and methods of all water discharged to the ground or to surface water in association with hydrostatic testing.

The Contractor shall regulate the pig velocity discharge rate (3000 gpm maximum), use energy dissipation devices, and install sediment barriers, as necessary, to prevent erosion, streambed scour, suspension of sediments, or excessive stream flow. Water must be disposed of using good engineering judgment so that all federal, state, and local environmental standards are met. Dewatering lines shall be of sufficient strength and be securely supported and tied down at the discharge end to prevent whipping during this operation.

To reduce the velocity of the discharge, The Contractor shall utilize an energy-dissipating device described as follows:

8.4.1 Splash Pup

A splash pup consists of a piece of large diameter pipe (usually over 20" outside diameter) of variable length with both ends partially blocked that is welded perpendicularly to the discharge pipe. As the discharge hits against the inside wall of the pup, the velocity is rapidly reduced and the water is allowed to flow out either end. A variation of the splash pup concept, commonly called a diffuser, incorporates the same design, but with capped ends and numerous holes punched in the pup to diffuse the energy.

8.4.2 Splash Plate

The splash plate is a quarter section of 36-inch pipe welded to a flat plate and attached to the end of a 6-inch discharge pipe. The velocity is reduced by directing the discharge stream into the air as it exits the pipe. This device is also effective for most overland discharge.

8.4.3 Plastic Liner

In areas where highly erodible soils exist or in any low flow drainage channel, it is a common practice to use layers of Visqueen (or any of the new construction fabrics currently available) to line the receiving channel for a short distance. One anchoring method may consist of a small load of rocks to keep the fabric in place during the discharge. Additional best management practices, such as the use of plastic sheeting or other material to prevent scour, will be used as necessary to prevent excessive sedimentation during dewatering.

8.4.4 Straw Bale Dewatering Structure

Straw bale dewatering structures are designed to dissipate and remove sediment from the water being discharged. Straw bale structures are used for on land discharge of wash water and hydrostatic test water and in combination with other energy dissipating devices for high volume discharges. A straw bale dewatering structure is shown In Detail 6. A dewatering filter bags may be sued as an alternative to show bale dewatering structures. A dewatering filter bag is shown in Detail 5.

THESE ARE TYPICAL DRAWINGS; ACTUAL SITE CONDITIONS MAY VARY FROM THE SITE GRAPHICALLY REPRESENTED.

Typical Drawing Index

Detail 1	Typical Silt Fence Barrier
Detail 2	Typical Straw or Hay Bail Barrier
Detail 3	Temporary/Permanent Slope Breaker Detail (Water Bars)
Detail 4	Erosion Control Matting Installation
Detail 5	Typical Dewatering Filter Bag
Detail 6	Typical Straw Bale Dewatering Structure
Detail 7	Typical Permanent Trench Breakers
Detail 8	"Dry" Wetland Crossing Method
Detail 9	Standard Wetland Crossing Method
Detail 10	Push/Pull Wetland Crossing Method
Detail 11	Typical Open Cut Wet Crossing Method Non-Flowing Waterbody
Detail 12	Typical Open Cut Wet Crossing Method Flowing Waterbody
Detail 12a	Typical Open Cut Wet Crossing Method Flowing Waterbody - Construction Procedures
Detail 13	Typical Dry Flume Crossing Method
Detail 13a	Typical Dry Flume Crossing Method - Construction Procedures
Detail 14	Typical Dam and Pump Crossing
Detail 14a	Typical Dam and Pump Crossing - Construction Procedures
Detail 15	Typical Horizontal Drill (HDD) Site Plan & Profile
Detail 16	Typical Temporary Bridge Crossing
Detail 16a	Typical Temporary Bridge Crossing - Construction Procedures
Detail 17	Typical Flume Bridge Crossing
Detail 18	Typical Railcar Bridge Crossing
Detail 18a	Typical Railcar Bridge Crossing - Construction Procedures
Detail 19	Flexible Channel Liner Installation
Detail 20	Typical Rock Rip-Rap
Detail 21	Typical Road Bore Crossing
Detail 22	Streambank Reclamation - Brush Layer in Cross Cut Slope
Detail 23	Streambank Reclamation - Log Wall
Detail 24	Streambank Reclamation - Vegetated Geotextile Installation
Detail 25	Typical ROW Layout/Soil Handling
Detail 26	Header/Main Crossovers of Pipeline
Detail 27	Relocate/Replace Drainage Header/Main
Detail 28	Temporary Drain Tile Repair
Detail 29	Permanent Repair Method of Drain Tiles
Detail 30	Equipment Cleaning Station Detail
Detail 31	Equipment Wash Station Detail
Detail 67	Topsoil Conservation Ditch & Spoil Stripping Triple Ditch
Detail 67A	Topsoil Conservation Ditch & Spoil Stripping Triple Ditch

NOTE: **The following typical drawings are included for ease of reference.**

- Details 1 through 31 can be found in the Construction Mitigation and Reclamation Plan

REVISIONS
01 2008-11-05 REVISED TITLES, ADDED/DEL. DETAILS
02 2010-10-08 REVISED TITLES
03 2010-10-11 REVISED TITLE BLOCK

TransCanada
In business to deliver

exp Energy Services Inc.
t: +1.850.385.5441 | f: +1.850.385.5523
1300 Metropolitan Blvd
Tallahassee, FL 32308
USA
www.exp.com
The new identity of Trow Engineering Consultants, Inc.

DESIGNER: JMP (NAME) 2010-10-21 (DATE)

CHECKED BY: WSF

DESIGN CHECKER: RW P7100

KEYSTONE XL PROJECT

FIA # 4359 | CHAINAGE: | DISCIPLINE # 03

TITLE: DETAIL INDEX

SCALE: N.T.S. | DWG No 4359-03-ML-00-700 | REV 03

TC_A4_BR.DWG 8.5X11

CADD DRAWING: DO NOT MAKE MANUAL REVISIONS

THESE ARE TYPICAL DRAWINGS; ACTUAL SITE CONDITIONS MAY VARY FROM THE SITE GRAPHICALLY REPRESENTED.

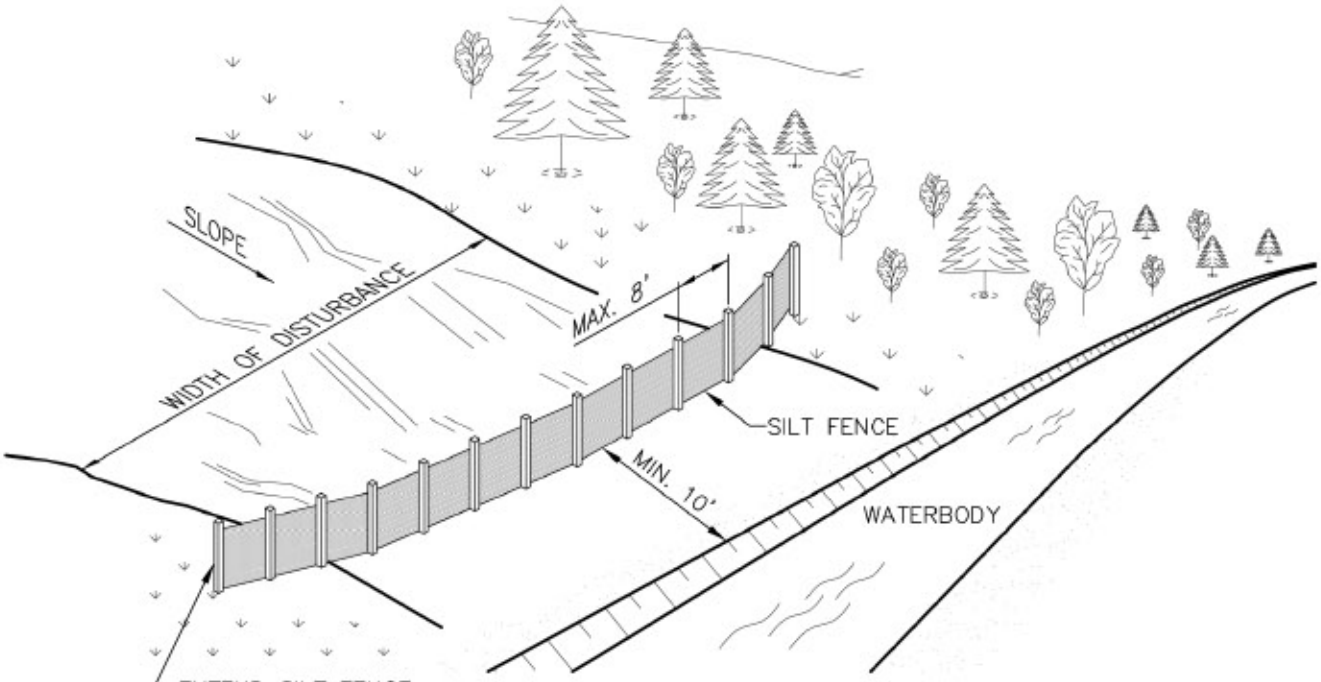

PLAN

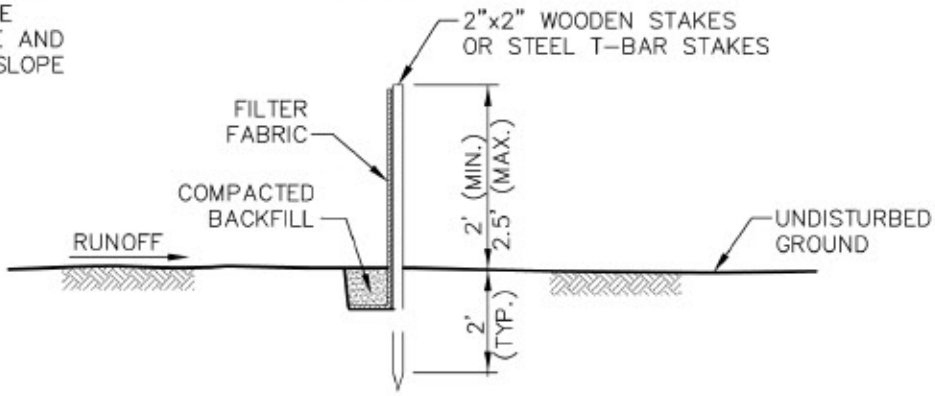

SECTION "A–A"

NOTES:

1. MATERIAL SHOULD BE WOVEN GEOTEXTILE FABRIC SUCH AS EXXON GTF 180 OR MIRAFI 600X, OR AN APPROVED EQUIVALENT. SECONDARY REINFORCEMENT, SUCH AS A CONSTRUCTION BARRIER FENCE OR WIRE MESH CAN ALSO BE USED BEHIND THE FILTER FABRIC.
2. SILT FENCE TO BE REINFORCED WITH 2"x2" WOODEN STAKES OR STEEL T-BAR STAKES PLACED EVERY 8' OR CLOSER AS CONDITIONS REQUIRE.
3. ATTACH FILTER FABRIC AT EACH POST AT A MINIMUM OF 3 LOCATIONS.
4. THE FILTER FABRIC MINIMUM LENGTH OF 1' IS TO BE ANCHORED IN A TRENCH WITH WELL COMPACTED BACKFILL OVER THE FABRIC TO PREVENT UNDERMINING.
5. TO ELIMINATE POSSIBLE END FLOW, BOTH ENDS OF THE SILT FENCE SHALL BE TURNED AND EXTENDED UPSLOPE.
6. SILT FENCES ARE TO BE CHECKED AND MAINTAINED ON A REGULAR BASIS. REMOVE ANY BUILD-UP OF SEDIMENT. REPLACE DAMAGED OR INEFFECTIVE SILT FENCE AS SOON AS POSSIBLE.
7. WHERE ANCHORING CONDITIONS FOR THE SILT FENCE ARE POOR, PLACE STRAW BALES ON DOWNSTREAM SIDE OF THE SILT FENCE.
8. INSTALLATION TO BE MODIFIED BY THE PROJECT AS NECESSARY TO SUIT ACTUAL SITE CONDITIONS.

REVISIONS
01 2008-11-04 UPDATED DRAWING NOTES
02 2010-10-08 UPDATED DRAWING NOTES
03 2010-10-11 REVISED TITLE BLOCK

TransCanada
In business to deliver

exp Energy Services Inc.
t: +1.850.385.5441 | f: +1.850.385.5523
1300 Metropolitan Blvd
Tallahassee, FL 32308
USA
www.exp.com

DESIGNER:		KEYSTONE XL PROJECT		
JMP (NAME)	2010-10-21 (DATE)	FIA # 4359	CHAINAGE:	DISCIPLINE # 03
		TITLE: DETAIL 1 TYPICAL SILT FENCE BARRIER		
CHECKED BY: WSF	DESIGN CHECKER: RW P7100	SCALE N.T.S.	DWG No 4359-03-ML-05-701	REV 03

TC_A4_BR.DWG 8.5X11

CADD DRAWING: DO NOT MAKE MANUAL REVISIONS

THESE ARE TYPICAL DRAWINGS; ACTUAL SITE CONDITIONS MAY VARY FROM THE SITE GRAPHICALLY REPRESENTED.

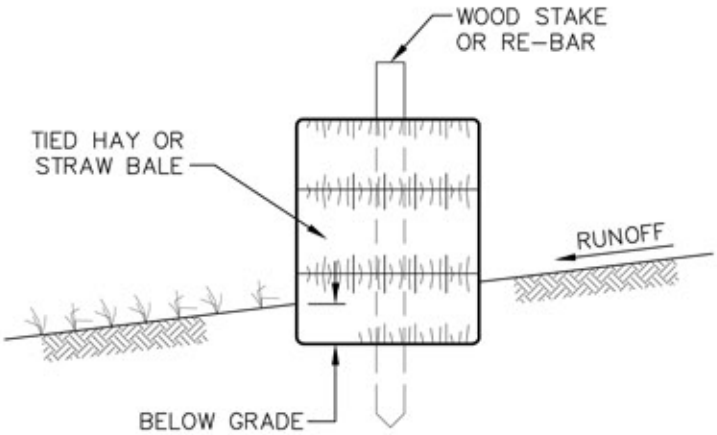

SECTION

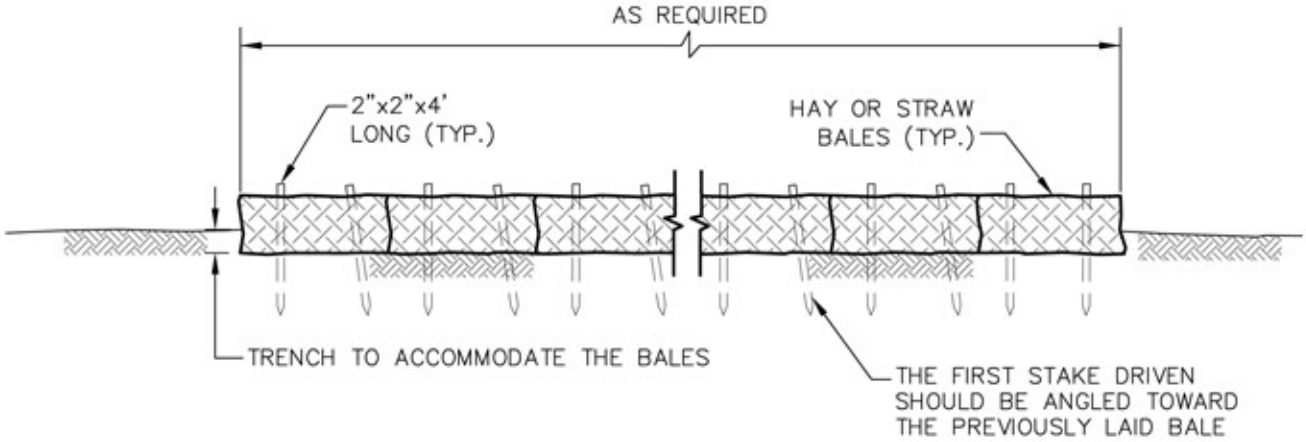

SECTION

NOTES:

1. TO ELIMINATE POSSIBLE END FLOW, BOTH ENDS OF THE STRAW BALE BARRIER SHOULD BE TURNED AND EXTENDED UPSLOPE.
2. EACH BALE SHOULD BE SECURED BY AT LEAST 2 STAKES. THE FIRST STAKE IN EACH BALE SHALL BE DRIVEN TOWARD THE PREVIOUSLY LAID BALE TO FORCE THE BALES TOGETHER. ANY GAPS CAN BE FILLED IN BY WEDGING LOOSE STRAW BETWEEN THE BALES. STAKES SHOULD BE DRIVEN. REBAR OR STANDARD "T" OR "U" STEEL POSTS CAN BE USED AS STAKES, BUT IT SHOULD BE NOTED THAT THEY MAY POSE A HAZARD TO EQUIPMENT IF THE BALES DISINTEGRATE.
3. COMPACT THE EXCAVATED SOIL AGAINST THE UPHILL SIDE OF THE BARRIER TO PREVENT PIPING.
4. STRAW OR HAY BALE BARRIERS REQUIRE CONTINUAL MAINTENANCE TO REMOVE COLLECTED SEDIMENT AND REPLACE DAMAGED BALES AS SOON AS POSSIBLE. PAY CLOSE ATTENTION TO THE REPAIR OF DAMAGED BALES, END RUNS AND UNDERCUTTING BENEATH BALES.
5. INSTALLATION TO BE MODIFIED BY THE PROJECT AS NECESSARY TO SUIT ACTUAL SITE CONDITIONS.

REVISIONS
01 2008-11-04 UPDATED DRAWING NOTES
02 2010-10-08 UPDATED DRAWING NOTES
03 2010-10-11 UPDATED DRAWING NOTES

TransCanada
In business to deliver

exp Energy Services Inc.
t: +1.850.385.5441 | f: +1.850.385.5523
1300 Metropolitan Blvd
Tallahassee, FL 32308
USA
www.exp.com

DESIGNER: JMP (NAME) 2010-10-21 (DATE)	KEYSTONE XL PROJECT		
	FIA # 4359	CHAINAGE:	DISCIPLINE # 03
	TITLE: DETAIL 2 TYPICAL STRAW OR HAY BALE BARRIER		
CHECKED BY: WSF / DESIGN CHECKER: RW P7100	SCALE N.T.S.	DWG No 4359-03-ML-05-702	REV 03

TC_A4_BR.DWG 8.5X11

CADD DRAWING: DO NOT MAKE MANUAL REVISIONS

THESE ARE TYPICAL DRAWINGS; ACTUAL SITE CONDITIONS MAY VARY FROM THE SITE GRAPHICALLY REPRESENTED.

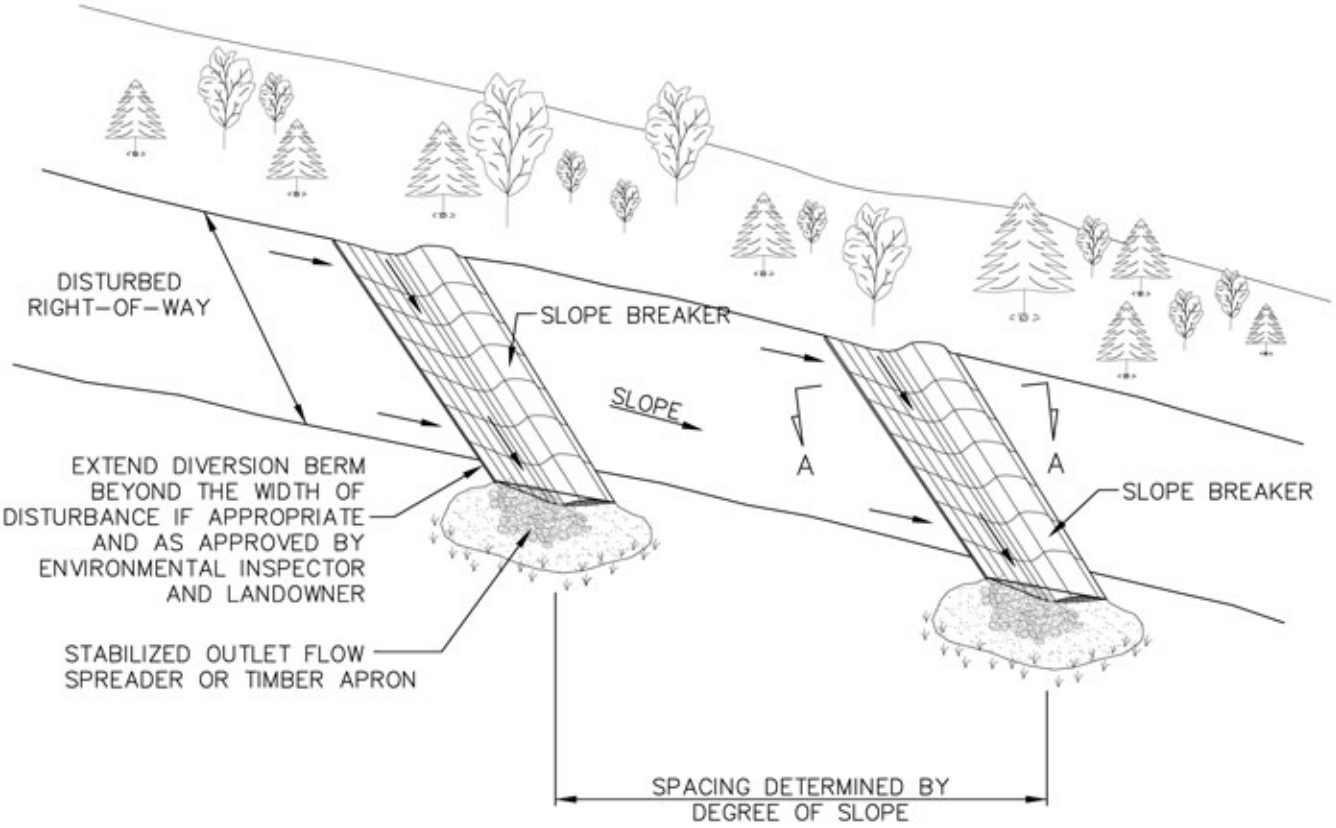

PLAN

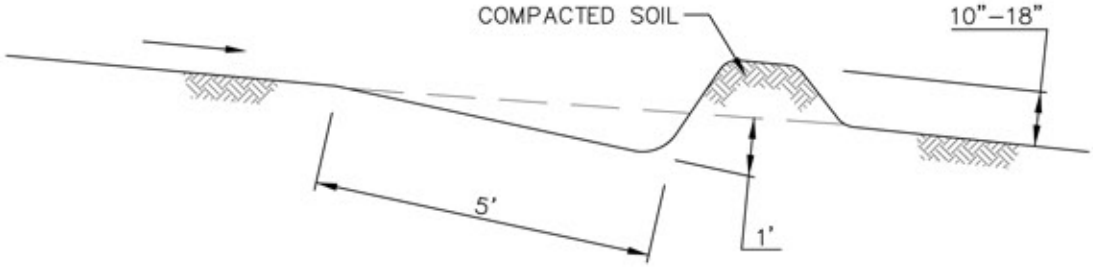

NOTES:

1. PERMANENT SLOPE BREAKERS TO PROVIDE POSITIVE DRAINAGE TO A STABILIZED OUTLET.
2. INSTALLATION SPECIFICATIONS TO BE MODIFIED BY THE PROJECT AS NECESSARY TO SUIT ACTUAL SITE CONDITIONS.
3. THE CONTRACTOR SHALL INSTALL TEMPORARY AND PERMANENT SLOPE BREAKERS ON SLOPES GREATER THAN APPROXIMATELY 5% ON ALL DISTURBED LANDS AT THE FOLLOWING RECOMMENDED SPACING:

SLOPE (%)	SPACING (FEET)
5-15	300
>15-30	200
>30	100

REVISIONS
01 2008-11-04 MODIFIED DRAWING NOTES
02 2010-10-08 UPDATED DRAWING NOTES
03 2010-10-11 REVISED TITLE BLOCK

TransCanada
In business to deliver

exp Energy Services Inc.
t: +1.850.385.5441 | f: +1.850.385.5523
1300 Metropolitan Blvd
Tallahassee, FL 32308
USA
www.exp.com

DESIGNER: JMP (NAME) 2010-10-21 (DATE)

CHECKED BY: WSF

DESIGN CHECKER: RW

P7100

KEYSTONE XL PROJECT

FIA # 4359 | CHAINAGE: | DISCIPLINE # 03

TITLE: DETAIL 3
TEMPORARY/PERMANENT SLOPE BREAKER DETAIL
(WATER BARS)

SCALE: N.T.S. | DWG No: 4359-03-ML-05-703 | REV: 03

TC_A4_BR.DWG 8.5X11

CADD DRAWING: DO NOT MAKE MANUAL REVISIONS

THESE ARE TYPICAL DRAWINGS; ACTUAL SITE CONDITIONS MAY VARY FROM THE SITE GRAPHICALLY REPRESENTED.

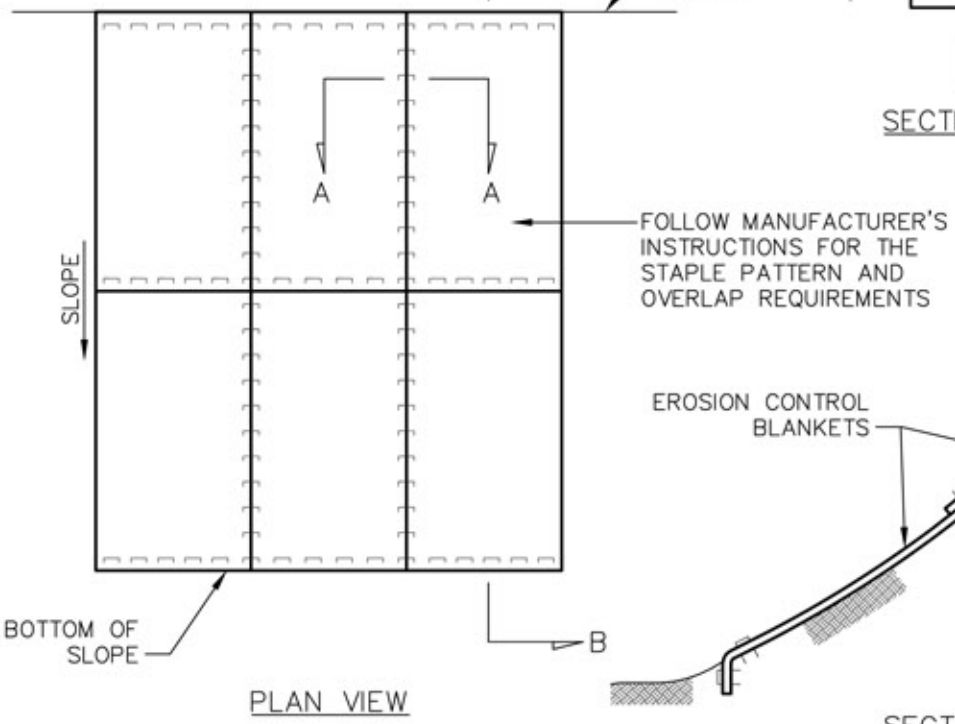

PLAN VIEW

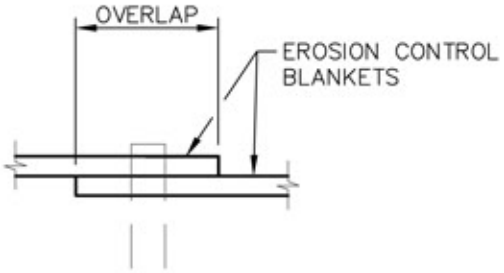

SECTION A–A

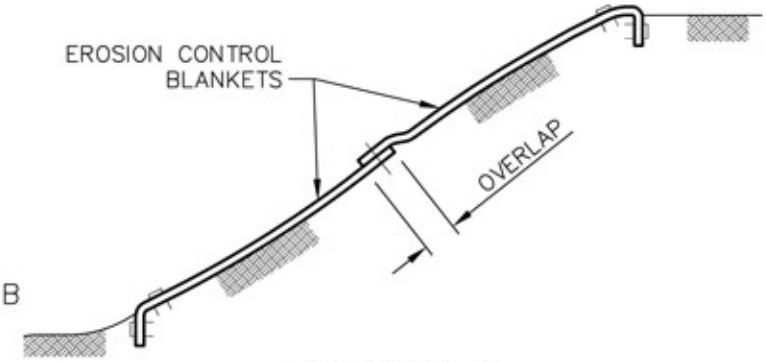

SECTION B–B

NOTES:

1. INSTALL MATTING IN ACCORDANCE WITH MANUFACTURER'S INSTRUCTIONS.
2. PREPARE SOIL BEFORE INSTALLING MATTING, INCLUDING GRADING, REMOVAL OF LARGE ROCKS AND DEBRIS, AND THE APPLICATION OF SEED AND FERTILIZER IF NOT USING PRE–SEEDED MATTING.
3. EROSION CONTROL MATTING SHALL EXTEND COMPLETELY ACROSS DISTURBED AREAS TO PROTECT ERODIBLE SURFACES.
4. BEGIN AT THE TOP OF THE SLOPE BY ANCHORING THE MATTING IN A TRENCH. BACKFILL AND COMPACT THE TRENCH AFTER STAPLING.
5. ROLL THE MATTING DOWN THE SLOPE IN THE DIRECTION OF THE WATER FLOW.
6. AS AN ALTERNATIVE TO STAPLES, WOODEN STAKES OR BIO–DEGRADEABLE PINS CAN BE USED WHERE SPECIFIED BY THE COMPANY.
7. ENSURE COMPLETE CONTACT BETWEEN THE MATTING AND THE SLOPE FACE. ADDITIONAL STAPLES CAN BE USE TO ELIMINATE GAPS.
8. INSTALLATION SPECIFICATIONS TO BE MODIFIED BY THE PROJECT AS NECESSARY TO SUIT ACTUAL SITE CONDITIONS.

REVISIONS
01 2008–11–04 MODIFIED DRAWING NOTES
02 2010–10–08 UPDATED DRAWING NOTES
03 2010–10–11 REVISED TITLE BLOCK

TransCanada
In business to deliver

exp Energy Services Inc.
t: +1.850.385.5441 | f: +1.850.385.5523
1300 Metropolitan Blvd
Tallahassee, FL 32308
USA
www.exp.com

DESIGNER: JMP (NAME) 2010–10–21 (DATE)	KEYSTONE XL PROJECT		
	FIA # 4359	CHAINAGE:	DISCIPLINE # 03
	TITLE: DETAIL 4 EROSION CONTROL MATTING INSTALLATION		
CHECKED BY: WSF / DESIGN CHECKER: RW P7100	SCALE N.T.S.	DWG No 4359–03–ML–05–704	REV 03

TC_A4_BR.DWG 8.5X11

CADD DRAWING: DO NOT MAKE MANUAL REVISIONS

THESE ARE TYPICAL DRAWINGS; ACTUAL SITE CONDITIONS MAY VARY FROM THE SITE GRAPHICALLY REPRESENTED.

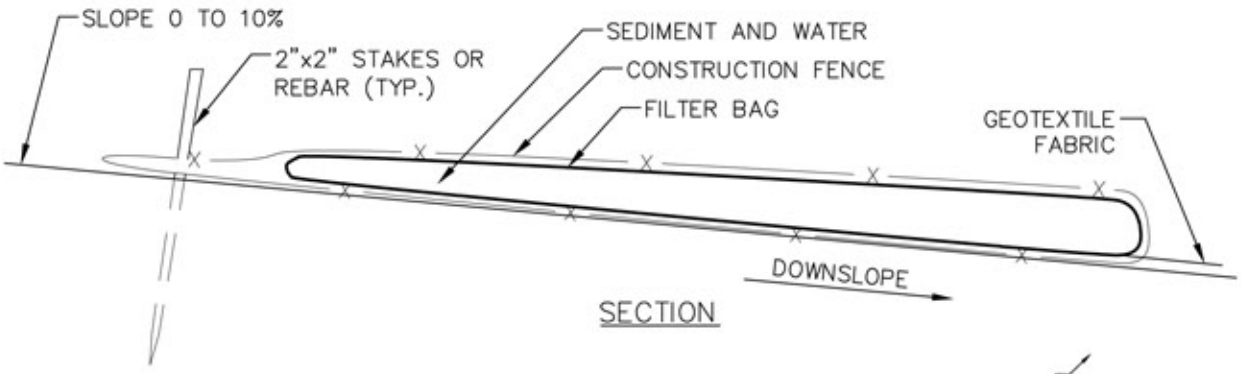

SECTION

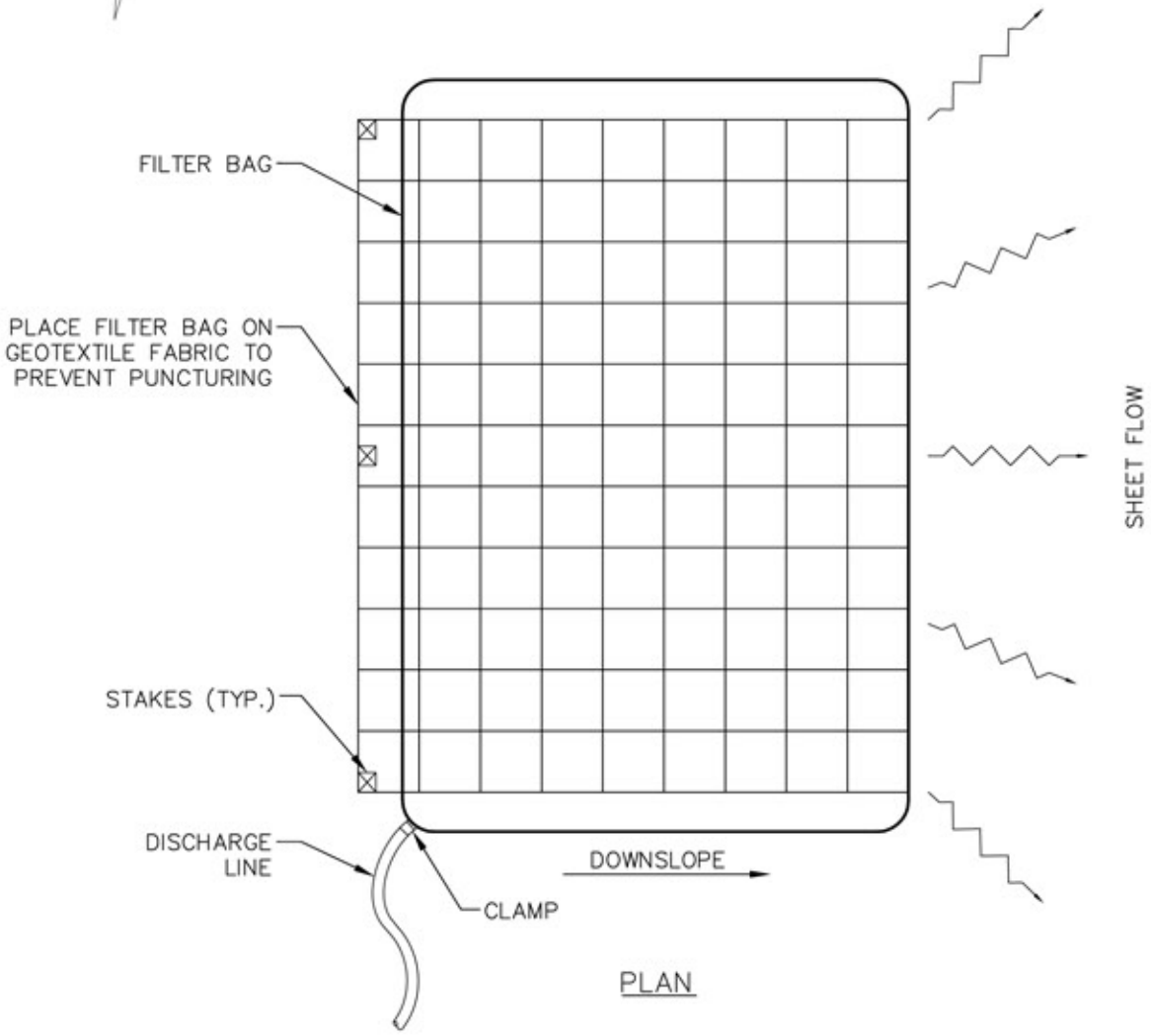

PLAN

NOTES:

1. MANUFACTURED NONWOVEN (FELT) FILTER BAGS ARE A SUITABLE ALTERNATIVE TO STRAW BALE STRUCTURES FOR TRENCH DEWATERING. FILTER BAGS SHALL BE INSTALLED AS SPECIFIED BY THE MANUFACTURER.
2. INSTALLATION SPECIFICATIONS TO BE MODIFIED AS NECESSARY TO SUIT ACTUAL SITE CONDITIONS.

REVISIONS
01 2008-11-04 MODIFIED DRAWING NOTES
02 2010-10-11 REVISED TITLE BLOCK

TransCanada
In business to deliver

exp Energy Services Inc.
t: +1.850.385.5441 | f: +1.850.385.5523
1300 Metropolitan Blvd
Tallahassee, FL 32308
USA
www.exp.com

DESIGNER: JMP (NAME) 2010-10-21 (DATE)

CHECKED BY: WSF
DESIGN CHECKER: RW P7100

KEYSTONE XL PROJECT

FIA # 4359 | CHAINAGE: | DISCIPLINE # 03

TITLE
DETAIL 5
TYPICAL DEWATERING FILTER BAG

SCALE N.T.S. | DWG No 4359-03-ML-05-705 | REV 02

TC_A4_BR.DWG 8.5X11

CADD DRAWING: DO NOT MAKE MANUAL REVISIONS

THESE ARE TYPICAL DRAWINGS; ACTUAL SITE CONDITIONS MAY VARY FROM THE SITE GRAPHICALLY REPRESENTED.

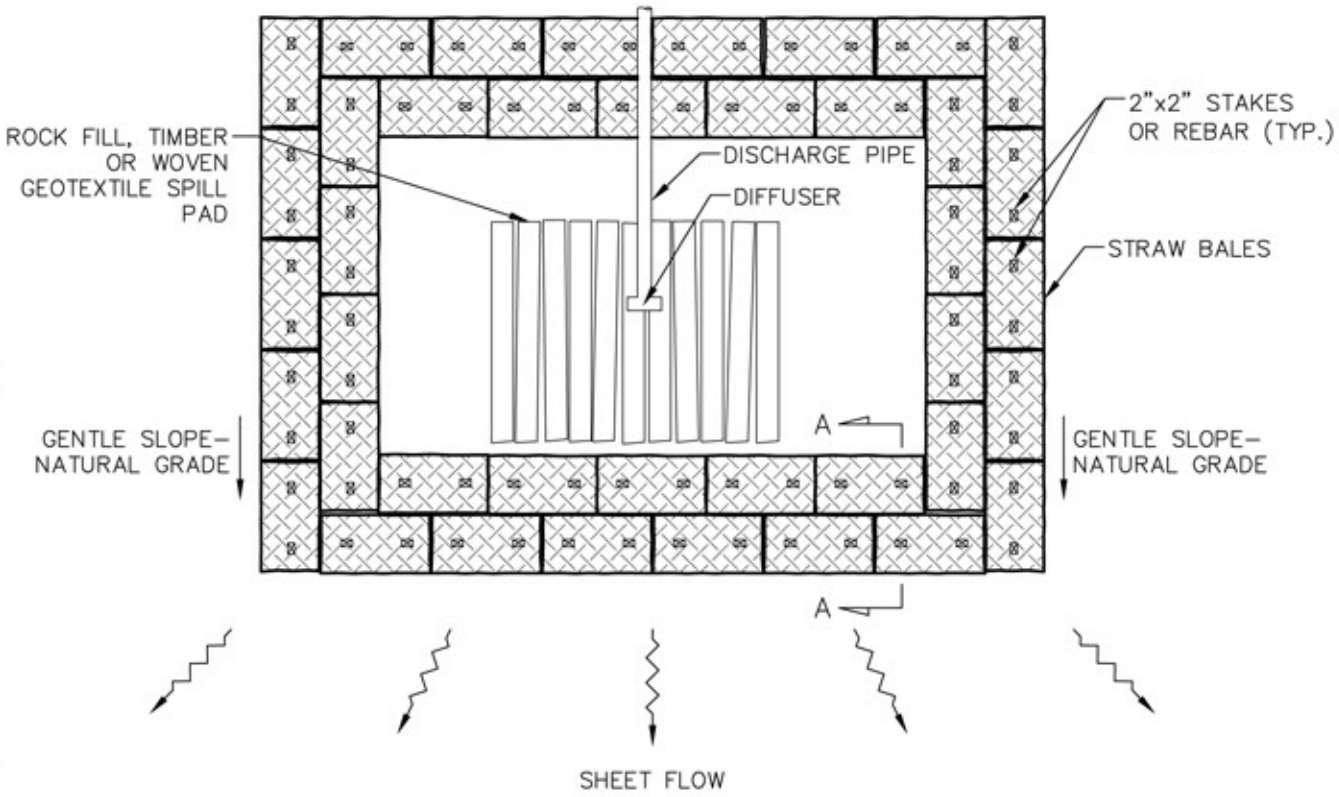

PLAN

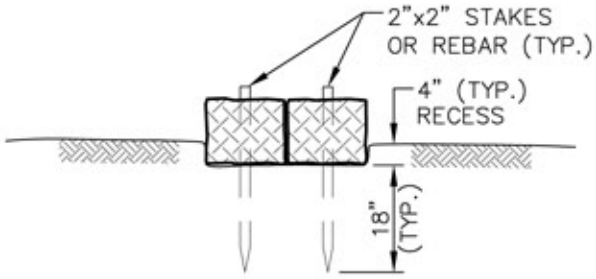

SECTION A–A

NOTES:

1. INSTALL A STRAW BALE DEWATERING STRUCTURE WHEREVER IT IS NECESSARY AND AS DIRECTED BY THE ENVIRONMENTAL INSPECTOR TO PREVENT THE FLOW OF HEAVILY SILT LADEN WATER INTO WATERBODIES OR WETLANDS.
2. DISCHARGE SITE SHOULD BE WELL VEGETATED AND LOCATED AT LEAST 50 FEET FROM ANY WATERBODY. THE TOPOGRAPHY OF THE SITE SHOULD BE SUCH THAT WATER WILL FLOW INTO THE DEWATERING STRUCTURE AND AWAY FROM ANY WORK AREAS. THE AREA DOWNSLOPE FROM THE DEWATERING SITE MUST BE REASONABLY FLAT OR STABILIZED BY VEGETATION OR OTHER MEANS TO ALLOW THE FILTERED WATER TO CONTINUE AS SHEET FLOW.
3. DIRECT THE PUMPED WATER ONTO A STABLE SPILL PAD CONSTRUCTED OF ROCKFILL, WEIGHTED TIMBERS, OR A WOVEN GEOTEXTILE STAKED TO THE GROUND SURFACE, SUCH AS MIRAFI 600X, TERRAFIX 400W, OR A COMPANY APPROVED EQUIVALENT. BEYOND THE SPILL PAD FORCE THE DISCHARGE WATER INTO SHEET FLOW USING STRAW BALES AND THE NATURAL TOPOGRAPHY.
4. DISCHARGE RATES SHOULD BE SUCH THAT THE CAPACITY OF THE STRUCTURE WILL NOT BE EXCEEDED.
5. DISCHARGE WATER SHALL BE FORCED INTO SHEET FLOW IMMEDIATELY BEYOND THE SPILL PAD USING A COMBINATION OF STRAW BALES AND THE NATURAL TOPOGRAPHY. RECESS STRAW BALES. DRIVE TWO (2) STAKES OR REBAR INTO EACH BALE TO ANCHOR THEM IN PLACE.
6. INSTALLATION SPECIFICATIONS TO BE MODIFIED AS NECESSARY TO SUIT ACTUAL SITE CONDITIONS.

REVISIONS
01 2008-11-04 MODIFIED DRAWING NOTES
02 2010-10-08 UPDATED DRAWING NOTES
03 2010-10-11 UPDATED DRAWING NOTES

TransCanada
In business to deliver

exp Energy Services Inc.
t: +1.850.385.5441 | f: +1.850.385.5523
1300 Metropolitan Blvd
Tallahassee, FL 32308
USA
www.exp.com

DESIGNER: JMP (NAME) 2010-10-21 (DATE)	KEYSTONE XL PROJECT		
	FIA # 4359	CHAINAGE:	DISCIPLINE # 03
	TITLE: DETAIL 6 TYPICAL STRAW BALE DEWATERING STRUCTURE		
CHECKED BY: WSF	DESIGN CHECKER: RW P7100	SCALE N.T.S.	DWG No 4359-03-ML-05-706 REV 03

TC_A4_BR.DWG 8.5X11

CADD DRAWING: DO NOT MAKE MANUAL REVISIONS

THESE ARE TYPICAL DRAWINGS; ACTUAL SITE CONDITIONS MAY VARY FROM THE SITE GRAPHICALLY REPRESENTED.

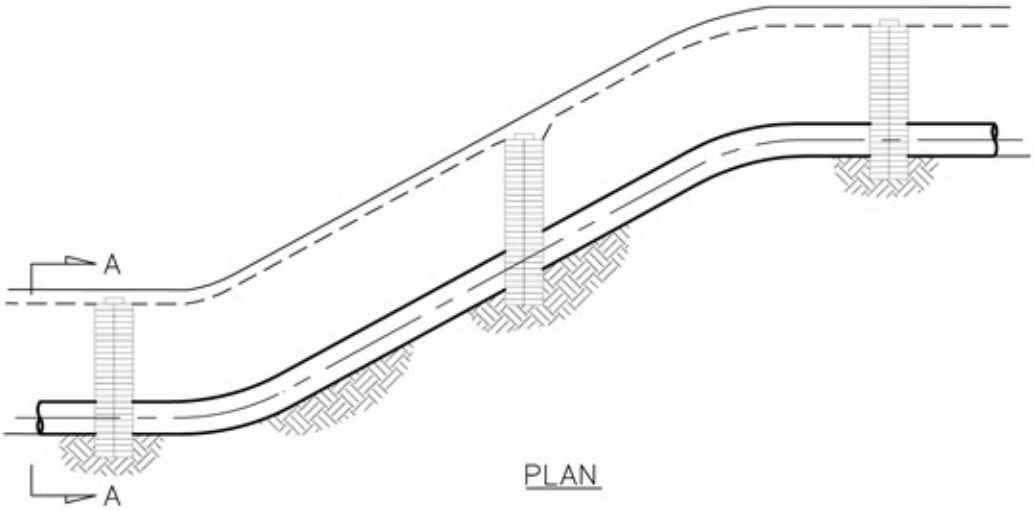

PLAN

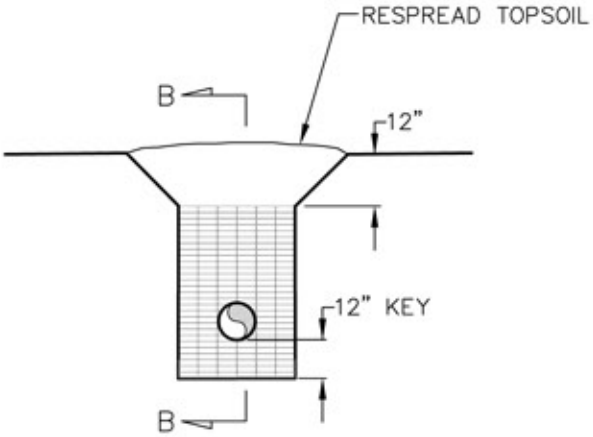

SECTION A–A

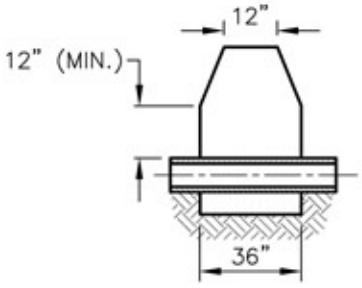

SECTION B–B

NOTES:

1. TRENCH BREAKERS TO BE INSTALLED AS SHOWN ON THE CONSTRUCTION DRAWINGS, WHERE DESCRIBED IN THE PLAN, AND AS DIRECTED.
2. OPEN WEAVE HEMP OR JUTE SACKS SHALL BE FILLED WITH AN AVERAGE 55 LBS. MIXTURE OF:
   1) ONE (1) PART CEMENT AND SIX (6) PARTS SAND OR SUBSOIL, OR
   2) ONE (1) PART CEMENT, THREE (3) PARTS FLYASH, AND FIVE (5) PARTS SAND OR SUBSOIL
   3) SAND WITH JUST SUFFICIENT WATER TO PERMIT MIXTURE TO EXUDE AND BOND SACKS TOGETHER. TOPSOIL IS NOT TO BE USED IN SACKS.
3. KEY EACH TRENCH BREAKER A MINIMUM OF ONE (1) FT. INTO BOTTOMS AND SIDES OF TRENCH.
4. FOAM TRENCH BREAKERS MAY BE USED IN LIEU OF SAND SACK TRENCH BREAKERS.
5. INSTALLATION SPECIFICATIONS TO BE MODIFIED AS NECESSARY TO SUIT ACTUAL SITE CONDITIONS.
6. TRENCH BREAKERS SHALL BE INSTALLED SUCH THAT THE TOP OF EACH DOWNSLOPE BREAKER IS ABOVE THE BOTTOM OF THE NEXT UPSLOPE BREAKER.

REVISIONS
01 2008–11–04 UPDATED DRAWING NOTES
02 2010–10–11 UPDATED PLAN DETAIL

TransCanada
In business to deliver

exp Energy Services Inc.
t: +1.850.385.5441 | f: +1.850.385.5523
1300 Metropolitan Blvd
Tallahassee, FL 32308
USA
www.exp.com

DESIGNER: JMP (NAME) 2010–10–21 (DATE)

CHECKED BY: WSF

DESIGN CHECKER: RW P7100

KEYSTONE XL PROJECT

FIA # 4359 | CHAINAGE: | DISCIPLINE # 03

TITLE
DETAIL 7
TYPICAL PERMANENT TRENCH BREAKER

SCALE N.T.S. | DWG No 4359–03–ML–05–707 | REV 02

TC_A4_BR.DWG 8.5X11

CADD DRAWING: DO NOT MAKE MANUAL REVISIONS

THESE ARE TYPICAL DRAWINGS; ACTUAL SITE CONDITIONS MAY VARY FROM THE SITE GRAPHICALLY REPRESENTED.

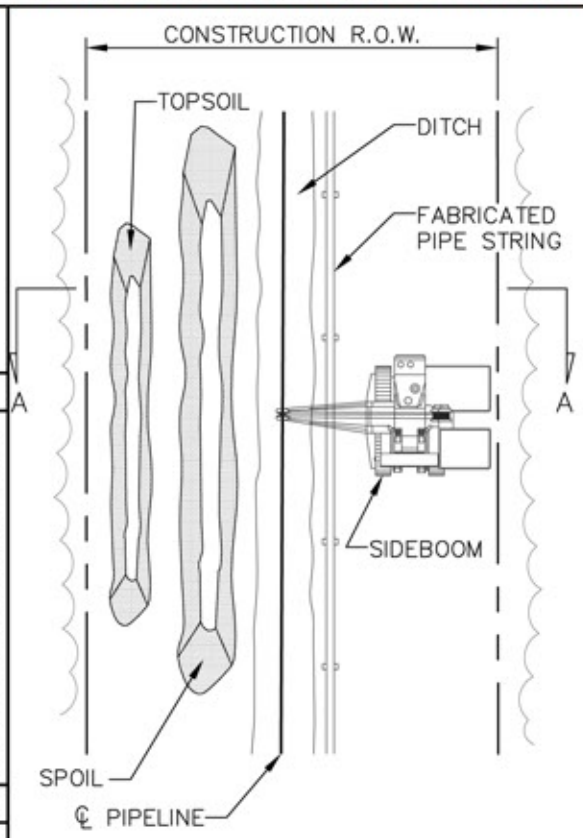

PLAN VIEW

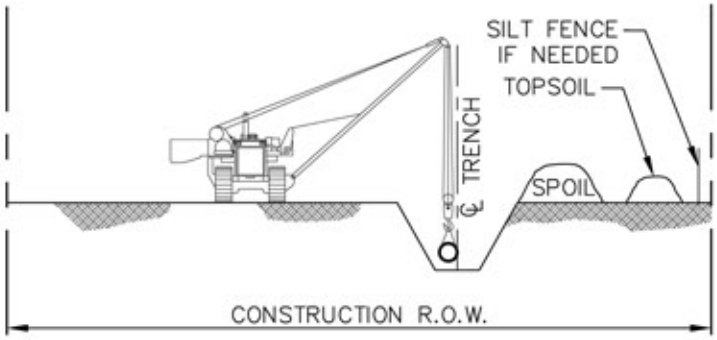

SECTION "A–A"

CONSTRUCTION PROCEDURES:

1. IF THE WETLAND IS BEING CULTIVATED AND FARMED, NO WETLAND CONSTRUCTION PROCEDURES ARE REQUIRED.
2. FLAG WETLAND BOUNDARIES PRIOR TO CLEARING.
3. NO REFUELING OF MOBILE EQUIPMENT IS ALLOWED WITHIN 100 FEET OF WETLAND. PLACE "NO FUELING" SIGN POSTS APPROXIMATELY 100 FEET BACK FROM WETLAND BOUNDARY. REFUEL STATIONARY EQUIPMENT AS PER THE PROJECT'S SPILL PREVENTION PROCEDURES.
4. INSTALL TEMPORARY SLOPE BREAKER UPSLOPE WITHIN 100 FEET OF WETLAND BOUNDARY IF DIRECTED BY THE PROJECT.
5. DO NOT TRENCH WETLAND UNTIL PIPE IS READY TO INSTALL.
6. CONSTRUCT WHEN DRY, IF POSSIBLE. IF SITE BECOMES WET AT TIME OF TRENCHING, AVOID SOIL COMPACTION BY UTILIZING TIMBER RIP–RAP OR PREFABRICATED EQUIPMENT MATS.
7. AVOID ADJACENT WETLANDS. INSTALL SEDIMENT BARRIERS (STRAW BALES AND/OR SILT FENCE) AT DOWN SLOPE EDGE OF RIGHT–OF–WAY ALONG WETLAND EDGE IF NEEDED TO CONTAIN SPOIL WITHIN RIGHT–OF–WAY.
8. RESTRICT ROOT GRUBBING TO ONLY THAT AREA OVER THE DITCHLINE AND REMOVE STUMPS FROM WETLAND FOR DISPOSAL.
9. CONDUCT TRENCH LINE TOPSOIL STRIPPING (IF TOPSOIL IS NOT SATURATED). SALVAGE TOPSOIL TO ACTUAL DEPTH OR A MAXIMUM DEPTH OF 12 INCHES.
10. TRENCH THROUGH WETLANDS.
11. PIPE SECTION TO BE FABRICATED WITHIN THE WETLAND AND ADJACENT TO ALIGNMENT, OR IN STAGING AREA OUTSIDE THE WETLAND AND WALKED IN.
12. LOWER–IN PIPE. PRIOR TO BACKFILLING TRENCH, IF REQUIRED, TRENCH PLUGS SHALL BE INSTALLED AS REQUIRED. BACKFILL TRENCH.
13. RESTORE GRADE TO NEAR PRE–CONSTRUCTION TOPOGRAPHY, REPLACE TOPSOIL AND INSTALL PERMANENT EROSION CONTROL.
14. IF UTILIZED, REMOVE TIMBER MATS OR PRE–FABRICATED MATS FROM WETLANDS UPON COMPLETION.
15. IN THE ABSENCE OF A DETAILED REVEGETATION PLANS, APPLY A TEMPORARY COVER CROP AS DIRECTED BY KEYSTONE.

REVISIONS
01 REVISED NOTES 3 & 4
02 2010–10–08 UPDATED DRAWING NOTES
03 2010–10–11 UPDATED DRAWING NOTES

TransCanada
In business to deliver

exp Energy Services Inc.
t: +1.850.385.5441 | f: +1.850.385.5523
1300 Metropolitan Blvd
Tallahassee, FL 32308
USA
www.exp.com

DESIGNER: JMP (NAME) 2010–10–21 (DATE)

CHECKED BY: WSF | DESIGN CHECKER: RW | P7100

KEYSTONE XL PROJECT

FIA # 4359 | CHAINAGE: | DISCIPLINE # 03

TITLE: DETAIL 8 "DRY" WETLAND CROSSING METHOD

SCALE N.T.S. | DWG No 4359–03–ML–03–701 | REV 03

TC_A4_BR.DWG 8.5X11

CADD DRAWING: DO NOT MAKE MANUAL REVISIONS

THESE ARE TYPICAL DRAWINGS; ACTUAL SITE CONDITIONS MAY VARY FROM THE SITE GRAPHICALLY REPRESENTED.

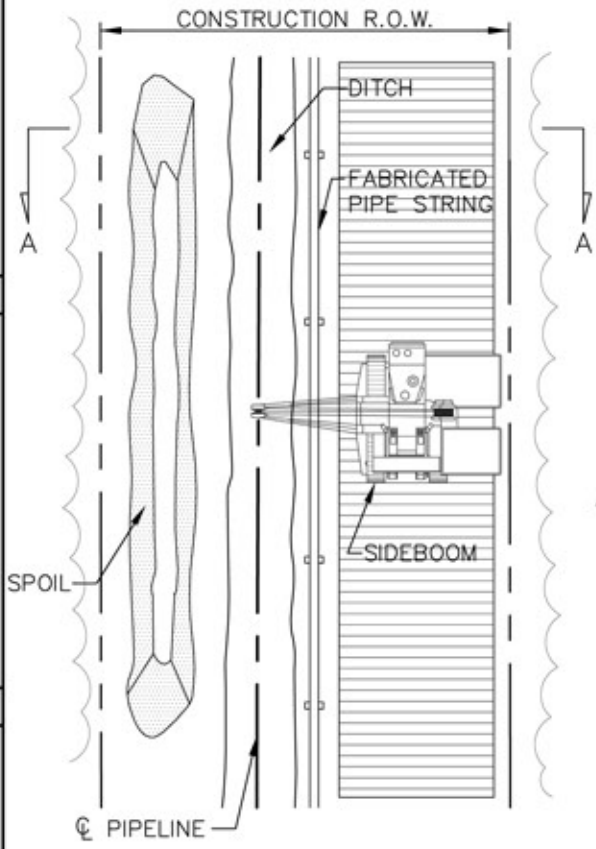

PLAN VIEW

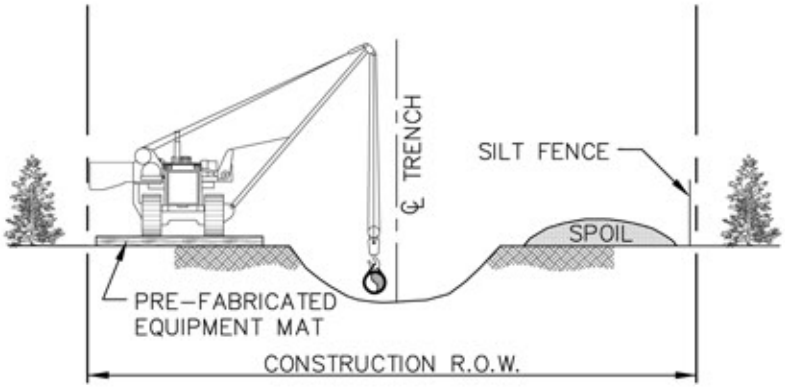

SECTION A–A

CONSTRUCTION PROCEDURES:

1. FLAG WETLAND BOUNDARIES PRIOR TO CLEARING.
2. NO REFUELING OF MOBILE EQUIPMENT IS ALLOWED WITHIN 100 FEET OF WETLAND. PLACE "NO FUELING" SIGN POSTS 100 FEET BACK FROM WETLAND BOUNDARY. REFUEL STATIONARY EQUIPMENT AS PER THE PROJECT'S SPILL PREVENTION PROCEDURES.
3. INSTALL TEMPORARY SLOPE BREAKER UPSLOPE WITHIN 100 FEET OF WETLAND BOUNDARY IF DIRECTED BY THE PROJECT.
4. INSTALL TIMBER MATS/RIPRAP THROUGH ENTIRE WETLAND AREA. EQUIPMENT NECESSARY FOR RIGHT-OF-WAY CLEARING MAY MAKE ONE (1) PASS THROUGH THE WETLAND BEFORE MATS ARE INSTALLED.
5. AVOID ADJACENT WETLANDS. INSTALL SEDIMENT BARRIERS (STRAW BALES AND/OR SILT FENCE) AT DOWNSLOPE EDGE OF RIGHT-OF-WAY AND ALONG WETLAND EDGE AS REQUIRED.
6. RESTRICT ROOT GRUBBING TO ONLY THAT AREA OVER THE DITCHLINE AND DITCH SPOIL AREAS AND REMOVED FROM WETLAND FOR DISPOSAL.
7. DO NOT TRENCH WETLAND UNTIL PIPE IS READY TO INSTALL.
8. TOPSOIL STRIPPING SHALL NOT BE REQUIRED IN SATURATED SOIL CONDITIONS.
9. LEAVE HARD PLUGS AT EDGE OF WETLAND UNTIL JUST PRIOR TO TRENCHING.
10. PIPE SECTION MAY BE FABRICATED WITHIN THE WETLAND AND ADJACENT TO ALIGNMENT, OR IN STAGING AREA OUTSIDE THE WETLAND AND WALKED IN.
11. TRENCH THROUGH WETLANDS.
12. LOWER-IN PIPE, INSTALL TRENCH PLUGS AT WETLAND EDGES AS REQUIRED AND BACKFILL IMMEDIATELY.
13. REMOVE TIMBER MATS OR PRE-FABRICATED MATS FROM WETLAND UPON COMPLETION.
14. RESTORE GRADE TO NEAR PRE-CONSTRUCTION TOPOGRAPHY, REPLACE TOPSOIL IF SALVAGED AND INSTALL PERMANENT EROSION CONTROL.

REVISIONS
01 REVISED NOTES 2 & 3
02 2010-10-11 UPDATED DRAWING NOTES

TransCanada
In business to deliver

exp Energy Services Inc.
t: +1.850.385.5441 | f: +1.850.385.5523
1300 Metropolitan Blvd
Tallahassee, FL 32308
USA
www.exp.com

DESIGNER: JMP (NAME) 2010-10-21 (DATE)

CHECKED BY: WSF

DESIGN CHECKER: RW P7100

KEYSTONE XL PROJECT

FIA # 4359 | CHAINAGE: | DISCIPLINE # 03

TITLE: DETAIL 9 STANDARD WETLAND CROSSING METHOD

SCALE N.T.S. | DWG No 4359-03-ML-03-702 | REV 02

TC_A4_BR.DWG 8.5X11

CADD DRAWING: DO NOT MAKE MANUAL REVISIONS

THESE ARE TYPICAL DRAWINGS; ACTUAL SITE CONDITIONS MAY VARY FROM THE SITE GRAPHICALLY REPRESENTED.

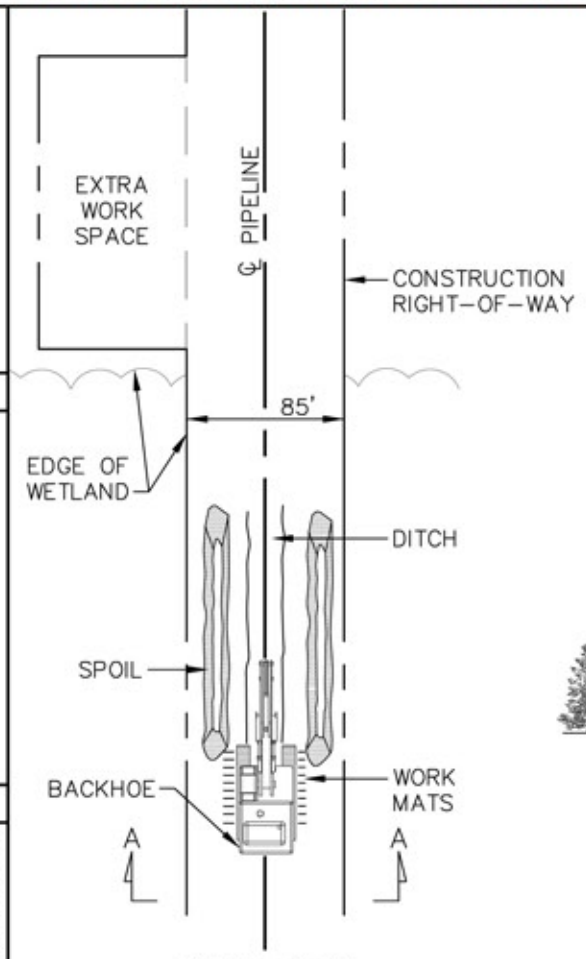

PLAN VIEW

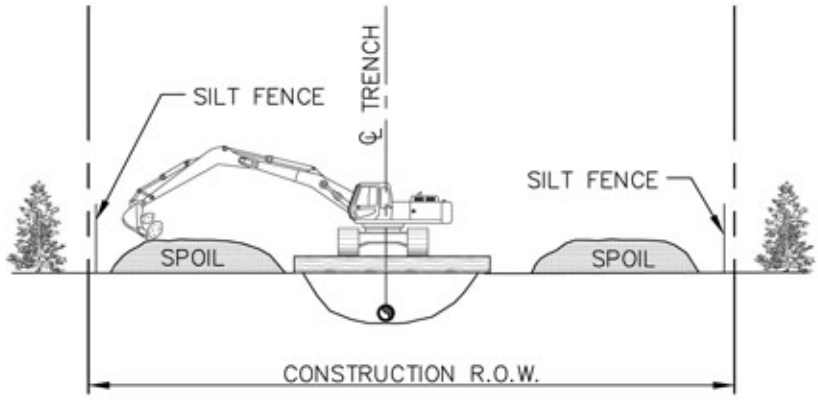

SECTION A–A

CONSTRUCTION PROCEDURES:

1. FLAG WETLAND BOUNDARIES PRIOR TO CLEARING.
2. NO REFUELING OF MOBILE EQUIPMENT IS ALLOWED WITHIN 100 FEET OF WETLAND. PLACE "NO FUELING" SIGN POSTS 100 FEET BACK FROM WETLAND BOUNDARY. REFUEL STATIONARY EQUIPMENT AS PER THE PROJECT'S SPILL PREVENTION PROCEDURES.
3. INSTALL TEMPORARY SLOPE BREAKER UPSLOPE WITHIN 100 FEET OF WETLAND BOUNDARY AS DIRECTED BY THE PROJECT.
4. RESTRICT ROOT GRUBBING TO ONLY THE AREA OVER THE DITCHLINE.
5. DO NOT TRENCH WETLAND UNTIL PIPE IS READY TO INSTALL.
6. TOPSOIL STRIPPING SHALL NOT BE REQUIRED IN SATURATED SOIL CONDITIONS.
7. UTILIZE AMPHIBIOUS EXCAVATORS (PONTOON MOUNTED BACKHOES) OR TRACKED BACKHOES SUPPORTED BY FABRICATED TIMBER MATS OR FLOATS TO EXCAVATE TRENCH. IF FABRICATED TIMBER MATS ARE USED FOR STABILIZATION, THE BACKHOE SHALL GRADUALLY MOVE ACROSS THE WETLAND BY MOVING THE MAT FROM IMMEDIATELY BEHIND TO IMMEDIATELY IN FRONT OF THE BACKHOE'S PATH.
8. AVOID ADJACENT WETLANDS. INSTALL SEDIMENT BARRIERS (STRAW BALES AND/OR SILT FENCE) AT EDGE OF RIGHT-OF-WAY AND ALONG WETLAND EDGE IF PRACTICAL.
9. FABRICATE PIPE IN STAGING AREA OUTSIDE THE WETLAND IN THE EXTRA WORK SPACE AS INDICATED ON THE CONSTRUCTION DRAWINGS.
10. LEAVE HARD PLUGS AT THE EDGE OF THE WETLAND UNTIL JUST PRIOR TO PIPE PLACEMENT.
11. FLOAT PIPE IN PLACE, LOWER-IN, INSTALL TRENCH PLUGS AT WETLAND EDGES WHERE REQUIRED AND BACKFILL IMMEDIATELY.
12. REMOVE TIMBER MATS OR PRE-FABRICATED MATS OF NON-NATIVE MATERIAL FROM WETLANDS UPON COMPLETION.
13. RESTORE GRADE TO NEAR PRE-CONSTRUCTION TOPOGRAPHY AND INSTALL PERMANENT EROSION CONTROL.
14. THE CONSTRUCTION RIGHT-OF-WAY FOR THIS TYPE OF CONSTRUCTION SHALL BE 85 FEET.

REVISIONS	
01	REVISED NOTES 2, 3 & 13
02	2010-10-11 UPDATED DRAWING NOTES

TransCanada
In business to deliver

exp Energy Services Inc.
t: +1.850.385.5441 | f: +1.850.385.5523
1300 Metropolitan Blvd
Tallahassee, FL 32308
USA
www.exp.com

DESIGNER:		KEYSTONE XL PROJECT		
JMP (NAME)	2010-10-21 (DATE)	FIA # 4359	CHAINAGE:	DISCIPLINE # 03
		TITLE: DETAIL 10 PUSH/PULL WETLAND CROSSING METHOD		
CHECKED BY: WSF	DESIGN CHECKER: RW P7100	SCALE N.T.S.	DWG No 4359-03-ML-03-703	REV 02

TC_A4_BR.DWG 8.5X11

CADD DRAWING: DO NOT MAKE MANUAL REVISIONS

THESE ARE TYPICAL DRAWINGS; ACTUAL SITE CONDITIONS MAY VARY FROM THE SITE GRAPHICALLY REPRESENTED.

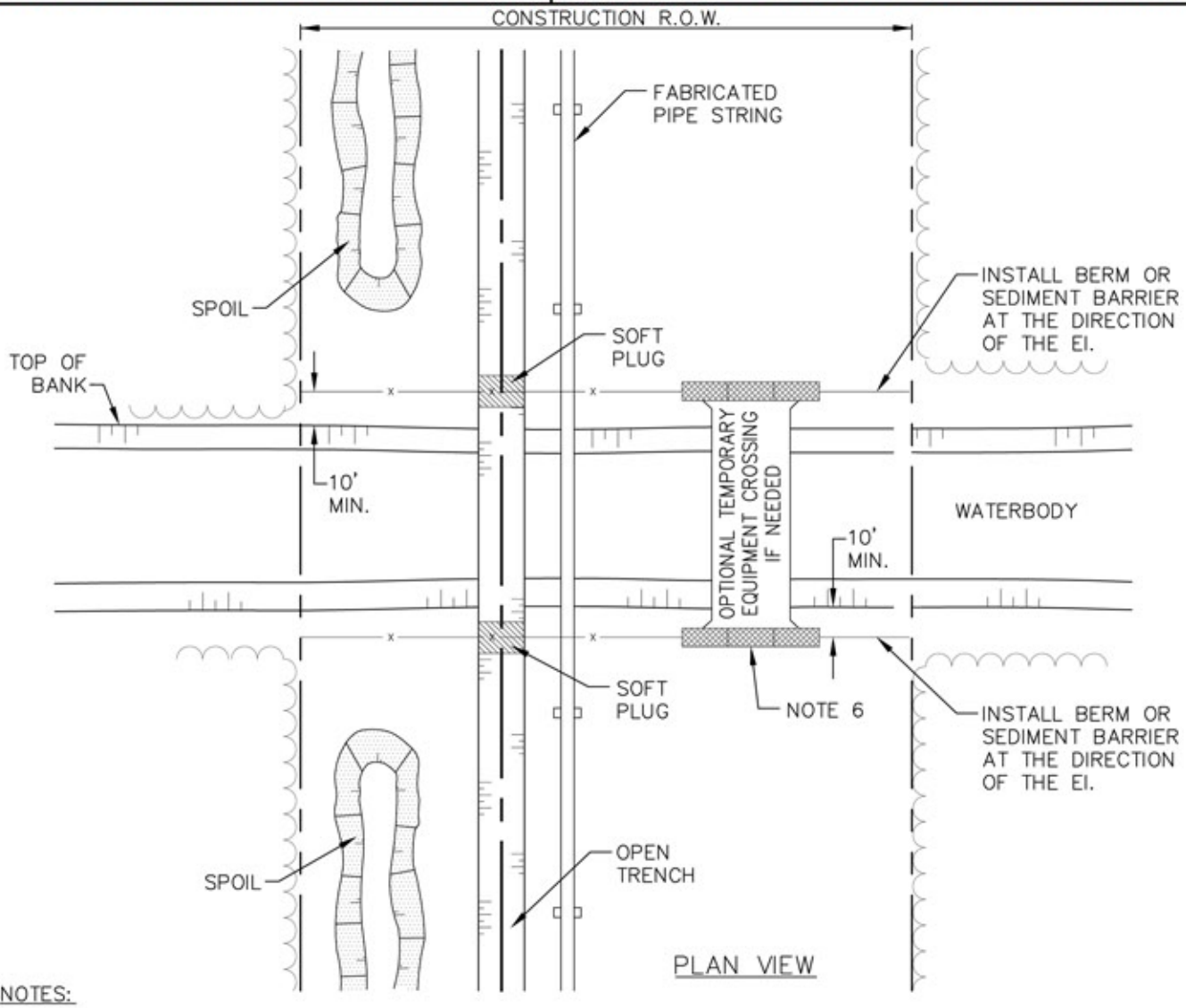

NOTES:

1. THIS METHOD APPLIES TO DRY WASHES, SWALES, INCISED DRAINAGES AND DITCHES WITH NO PERCEPTIBLE FLOW AT TIME OF CROSSING. IF FLOWS ARE PRESENT DURING CONSTRUCTION REFER TO DETAIL 12. CLEARING AND GRADING, TOPSOIL SALVAGE AND TOPSOIL STRIPPING DEPTHS SHALL BE THE SAME AS INDICATED FOR ADJACENT UPLAND UNLESS OTHERWISE DIRECTED BY KEYSTONE.
2. EI TO FLAG THE ORDINARY HIGH WATER MARK (OHWM) PRIOR TO CLEARING.
3. INSTALL SILT FENCE OR A BERM AT DIRECTION OF KEYSTONE EI TO PREVENT RUNOFF FROM ROW TO ADJACENT, UNDISTURBED DRAINAGE.
4. STOCKPILE TOPSOIL AND SPOIL SEPARATELY. TOPSOIL SHALL NOT BE STOCKPILED ACROSS THE DRAINAGE CHANNEL AND SHALL BE PLACED A MINIMUM OF 15 FEET FROM THE OHWM OR TO SUIT CONDITIONS AND PROTECT THE DRAINAGE AS DETERMINED BY KEYSTONE.
5. INSTALL TEMPORARY SLOPE BREAKERS WHERE IDENTIFIED BY THE EI.
6. TRENCH, STRING PIPE, AND BACKFILL USING STANDARD UPLAND CONSTRUCTION PROCEDURES UNLESS OTHERWISE DIRECTED BY KEYSTONE.
7. RESTORE WATERCOURSE CHANNEL AND BANKS (EXCEPT TRAVEL LANE IF USED) TO APPROXIMATE PRE-CONSTRUCTION PROFILE IMMEDIATELY AFTER PIPE IS LOWERED IN AND BACKFILLED. INSTALL PERMANENT EROSION CONTROLS WHERE DIRECTED BY KEYSTONE.
8. REMOVE ANY TEMPORARY CROSSING STRUCTURES AND/OR GRAVEL.

REVISIONS | 01 UPDATED DRAWING NOTES | 02 2010-10-08 UPDATED DRAWING NOTES | 03 2010-10-11 UPDATED DRAWING NOTES

TransCanada
In business to deliver

exp Energy Services Inc.
t: +1.850.385.5441 | f: +1.850.385.5523
1300 Metropolitan Blvd
Tallahassee, FL 32308
USA
www.exp.com

DESIGNER: JMP (NAME) 2010-10-21 (DATE)	KEYSTONE XL PROJECT		
	FIA # 4359	CHAINAGE:	DISCIPLINE # 03
	TITLE: DETAIL 11 TYPICAL OPEN CUT WET CROSSING METHOD NON-FLOWING WATERBODY		
CHECKED BY: WSF / DESIGN CHECKER: RW P7100	SCALE N.T.S.	DWG No 4359-03-ML-03-704	REV 03

TC_A4_BR.DWG 8.5X11

CADD DRAWING: DO NOT MAKE MANUAL REVISIONS

THESE ARE TYPICAL DRAWINGS; ACTUAL SITE CONDITIONS MAY VARY FROM THE SITE GRAPHICALLY REPRESENTED.

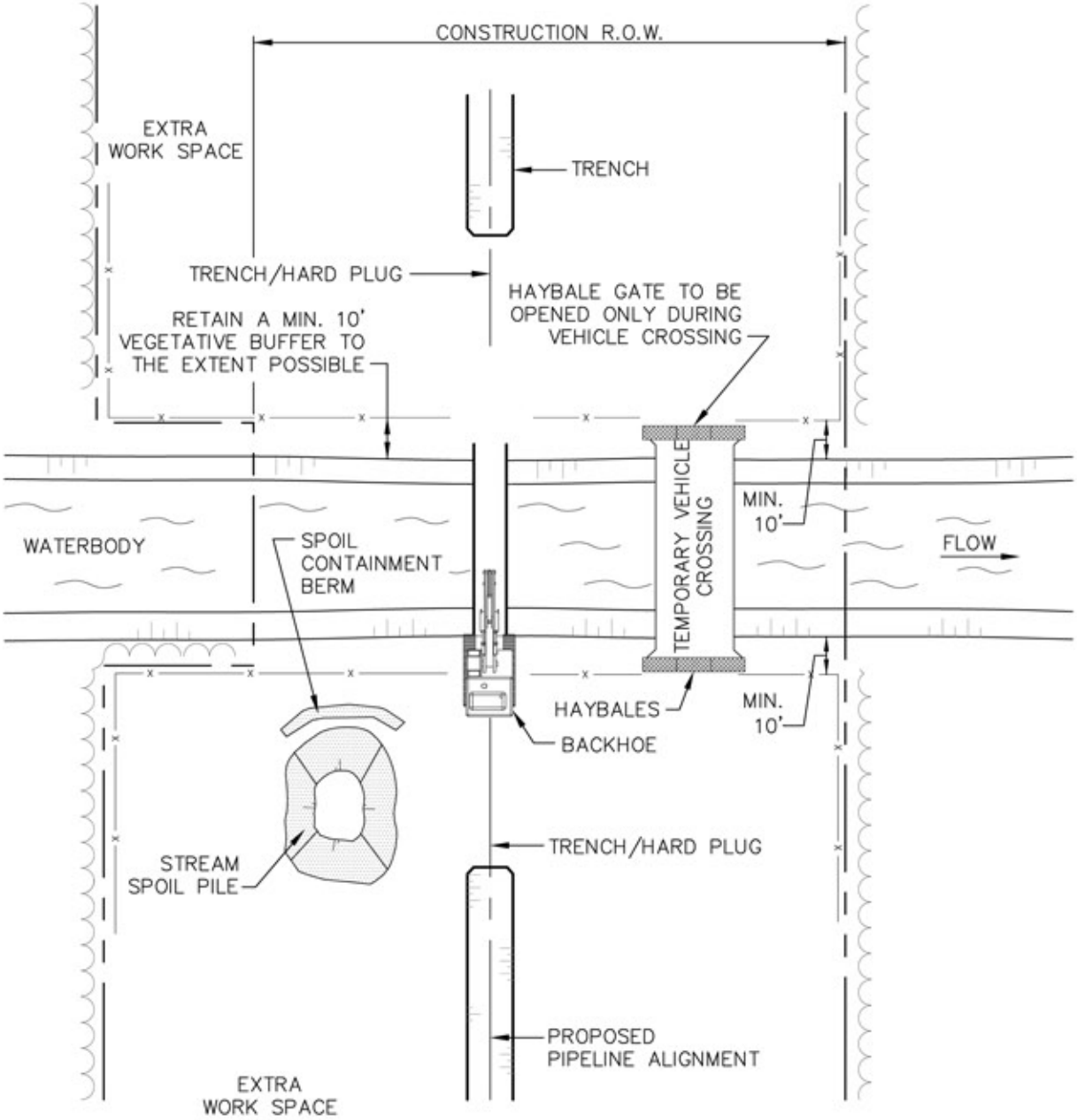

PLAN VIEW

REVISIONS | 01 UPDATED DRAWING NOTES | 02 2010-10-11 REVISED TITLE BLOCK

TransCanada
In business to deliver

exp Energy Services Inc.
t: +1.850.385.5441 | f: +1.850.385.5523
1300 Metropolitan Blvd
Tallahassee, FL 32308
USA
www.exp.com

DESIGNER: JMP (NAME) 2010-10-21 (DATE)	KEYSTONE XL PROJECT		
	FIA # 4359	CHAINAGE:	DISCIPLINE # 03
	TITLE: DETAIL 12 TYPICAL OPEN CUT WET CROSSING METHOD FLOWING WATERBODY		
CHECKED BY: WSF	DESIGN CHECKER: RW P7100	SCALE N.T.S.	DWG No 4359-03-ML-03-705 REV 02

TC_A4_BR.DWG 8.5X11

CADD DRAWING: DO NOT MAKE MANUAL REVISIONS

THESE ARE TYPICAL DRAWINGS; ACTUAL SITE CONDITIONS MAY VARY FROM THE SITE GRAPHICALLY REPRESENTED.

CONSTRUCTION PROCEDURES:

1. RIGHT-OF-WAY BOUNDARIES AND WORK SPACE LIMITS SHALL BE CLEARLY DELINEATED. STAGING FOR MAKEUP SHALL BE LOCATED A MINIMUM OF 10 FEET FROM WATERBODY.

2. CLEARING LIMITS WILL BE CLEARLY DELINEATED AND 10 FOOT VEGETATIVE BUFFER STRIP BETWEEN DISTURBED AREA AND THE WATERBODY SHALL BE MAINTAINED TO THE EXTENT POSSIBLE. ALL CLEARING SHALL BE MINIMIZED TO THE EXTENT POSSIBLE AND TO ONLY THAT NECESSARY FOR CONSTRUCTION. WOODY VEGETATION SHALL BE CUT AT GROUND LEVEL AND THE STUMPS/ROOTS LEFT IN PLACE TO THE EXTENT POSSIBLE.

3. TOPSOIL SHALL BE STRIPPED FROM THE DITCH LINE IN ALL WETLANDS RIPARIAN.

4. CONTRACTOR SHALL INSTALL SIGNS APPROXIMATELY 100 FEET MINIMUM FROM EACH WATERBODY AND WETLAND TO IDENTIFY THE HAZARDOUS MATERIALS EXCLUSION AREA.

5. EROSION AND SEDIMENT CONTROL
   a. CONTRACTOR SHALL SUPPLY, INSTALL AND MAINTAIN SEDIMENT CONTROL STRUCTURES, AS DEPICTED OR ALONG DOWN GRADIENT SIDES OF WORK AREAS AND STAGING AREAS SUCH THAT NO HEAVILY SILT LADEN WATER ENTERS WATERBODY OR WETLAND.

   b. NO HEAVILY SILT LADEN WATER SHALL BE DISCHARGED DIRECTLY OR INDIRECTLY INTO THE WATERBODY. ALL EROSION AND SEDIMENT CONTROL STRUCTURE LOCATIONS AS DEPICTED ARE APPROXIMATE AND MAY BE ADJUSTED AS DIRECTED BY THE COMPANY INSPECTOR TO SUIT ACTUAL SITE CONDITIONS. SILT FENCE OR STRAW BALE INSTALLATIONS SHALL INCLUDE REMOVABLE SECTIONS TO FACILITATE ACCESS DURING CONSTRUCTION.

   c. SEDIMENT LADEN WATER FROM TRENCH DEWATERING SHALL BE DISCHARGED TO A WELL VEGETATED UPLAND AREA INTO A STRAW BALE DEWATERING STRUCTURE OR GEOTEXTILE FILTER BAG. SEDIMENT CONTROL STRUCTURES MUST BE IN PLACE AT ALL TIMES ACROSS THE DISTURBED CONSTRUCTION RIGHT-OF-WAY EXCEPT DURING EXCAVATION/INSTALLATION OF THE CROSSING PIPE.

   d. SOFT DITCH PLUGS MUST REMAIN IN PLACE AT CONVENIENT LOCATIONS TO SEPARATE MAINLINE DITCH FROM THE WATERBODY CROSSING UNTIL THE WATER CROSSING IS INSTALLED AND BACKFILLED.

   e. TRENCH BREAKERS ARE TO BE INSTALLED AT THE SAME SPACING AND IMMEDIATELY UPSLOPE OF PERMANENT SLOPE BREAKERS, OR AS DIRECTED BY THE COMPANY.

6. CONTRACTOR SHALL MAINTAIN HARD PLUGS IN THE DITCH AT THE WATERBODY UNTIL JUST PRIOR TO PIPE INSTALLATION. CONTRACTOR SHALL EXCAVATE TRENCH AND INSTALL PIPE AS EXPEDIENTLY AS PRACTICAL TO REDUCE THE DURATION OF WORK ACTIVITIES IN THE WATERBODY BED.

7. CONTRACTOR SHALL PLACE TRENCH SPOIL ONLY IN CERTIFICATED WORK SPACE AND A MINIMUM OF 10 FEET FROM THE WATERBODY BANKS TO PREVENT ENTRY OF SPOIL INTO THE WATERBODY. SPOIL SHALL BE CONTAINED AS NECESSARY USING EITHER A STRAW BALE BARRIER OR AN EARTH/ROCK BERM.

8. CONTRACTOR SHALL RESTORE THE WATERBODY AND BANKS TO APPROXIMATE PRE-CONSTRUCTION CONTOURS, UNLESS OTHERWISE APPROVED BY THE COMPANY. CONTRACTOR SHALL INSTALL PERMANENT EROSION AND SEDIMENT CONTROL STRUCTURES AS INDICATED. ANY MATERIALS PLACED IN THE WATERBODY TO FACILITATE CONSTRUCTION SHALL BE REMOVED DURING RESTORATION. BANKS SHALL BE STABILIZED AND TEMPORARY SEDIMENT BARRIERS INSTALLED AS SOON AS POSSIBLE AFTER CROSSING, BUT WITHIN 24 HOURS OF COMPLETING THE CROSSING. MAINTAIN A SILT FENCE OR STRAW BALE BARRIER ALONG THE WATERBODY AND WETLAND BOUNDARIES UNTIL VEGETATION IS ESTABLISHED IN ADJACENT DISTURBED AREAS.

9. VEHICLE CROSSING CAN BE CONSTRUCTED USING EITHER A FLUME CROSSING OR A TEMPORARY BRIDGE. VEHICLE CROSSING ONLY REQUIRED IF STREAM SUPPORTS A STATE DESIGNATED FISHERY.

REVISIONS 01 2010-10-11 REVISED TITLE BLOCK

TransCanada
In business to deliver
exp Energy Services Inc.
t: +1.850.385.5441 | f: +1.850.385.5523
1300 Metropolitan Blvd
Tallahassee, FL 32308
USA
www.exp.com

DESIGNER:		KEYSTONE XL PROJECT		
JMP (NAME)	2010-10-21 (DATE)	FIA # 4359	CHAINAGE:	DISCIPLINE # 03
		TITLE: DETAIL 12A TYPICAL OPEN CUT WET CROSSING METHOD FLOWING WATERBODY – CONSTRUCTION PROCEDURES		
CHECKED BY: WSF	DESIGN CHECKER: RW P7100	SCALE N.T.S.	DWG No 4359-03-ML-03-706	REV 01

TC_A4_BR.DWG 8.5X11

CADD DRAWING: DO NOT MAKE MANUAL REVISIONS

THESE ARE TYPICAL DRAWINGS; ACTUAL SITE CONDITIONS MAY VARY FROM THE SITE GRAPHICALLY REPRESENTED.

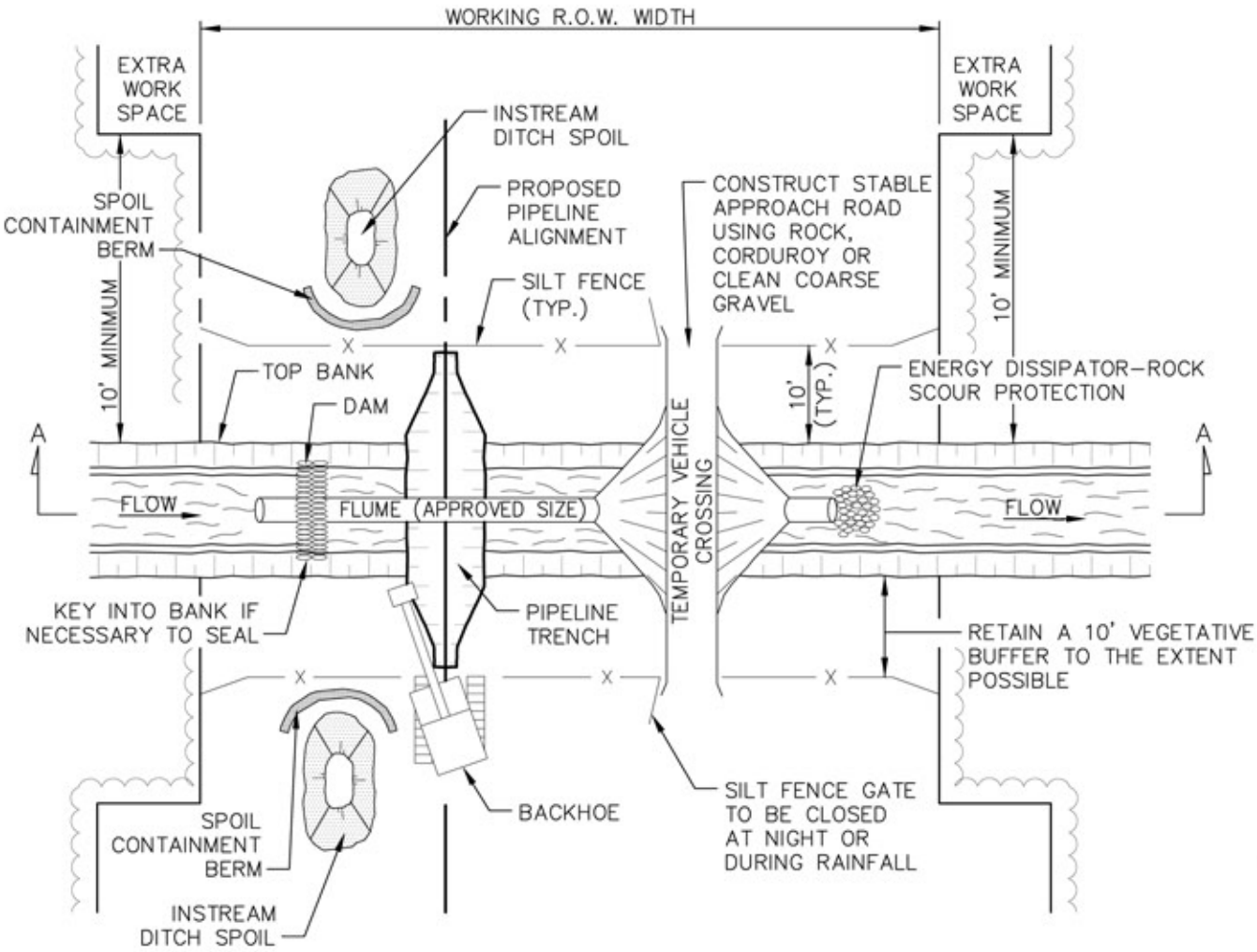

PLAN VIEW

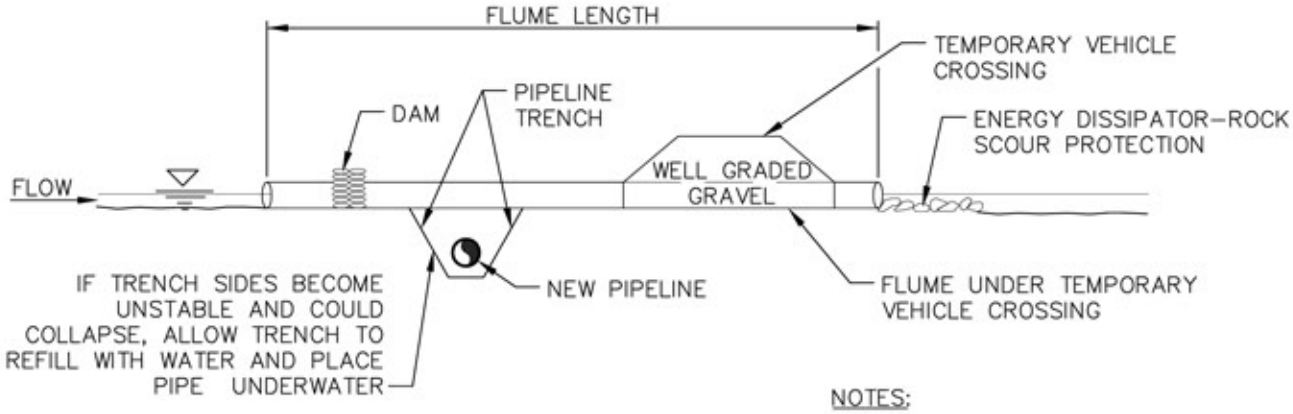

SECTION A–A

NOTES:

1. PIPELINE PLACEMENT WITHIN RIGHT–OF–WAY CONCEPTUAL ONLY.
2. SEE DETAIL 13A FOR CONSTRUCTION PROCEDURES.

REVISIONS 01 2010–10–11 REVISED TITLE BLOCK

TransCanada
In business to deliver

exp Energy Services Inc.
t: +1.850.385.5441 | f: +1.850.385.5523
1300 Metropolitan Blvd
Tallahassee, FL 32308
USA
www.exp.com

DESIGNER: JMP (NAME) 2010–10–21 (DATE)

CHECKED BY: WSF

DESIGN CHECKER: RW

P7100

KEYSTONE XL PROJECT

FIA # 4359 | CHAINAGE: | DISCIPLINE # 03

TITLE
DETAIL 13
TYPICAL DRY FLUME CROSSING METHOD

SCALE N.T.S. | DWG No 4359–03–ML–03–707 | REV 01

TC_A4_BR.DWG 8.5X11

CADD DRAWING: DO NOT MAKE MANUAL REVISIONS

THESE ARE TYPICAL DRAWINGS; ACTUAL SITE CONDITIONS MAY VARY FROM THE SITE GRAPHICALLY REPRESENTED.

CONSTRUCTION PROCEDURES:

1. MARK OUT AND MAINTAIN LIMITS OF AUTHORIZED WORK AREAS WITH FENCING OR FLAGGING TAPE TO AVOID UNNECESSARY DISTURBANCE OF VEGETATION. ENSURE EQUIPMENT OPERATORS WORKING ON THE CROSSING HAVE BEEN BRIEFED ABOUT THIS PLAN AND THE MEASURE NEEDED TO PROTECT WATER QUALITY.
2. ALL NECESSARY EQUIPMENT AND MATERIALS TO BUILD THE FLUME MUST BE ON-SITE OR READILY AVAILABLE PRIOR TO COMMENCING IN-WATER WORK.
3. TO THE EXTENT POSSIBLE, MAINTAIN A MINIMUM 10 FT. VEGETATIVE BUFFER STRIP BETWEEN DISTURBED AREAS AND THE WATERCOURSE. INSTALL AND MAINTAIN A SILT FENCE OR STRAW BALE BARRIER UPSLOPE OF THE BUFFER STRIP ON EACH SIDE OF THE WATERCOURSE.
4. CONTRACTOR SHALL SUPPLY, INSTALL AND MAINTAIN SEDIMENT CONTROL STRUCTURES, AS DEPICTED OR ALONG DOWN GRADIENT SIDES OF WORK AREAS AND STAGING AREAS SUCH THAT NO HEAVILY SILT LADEN WATER ENTERS STREAM.
   a. NO HEAVILY SILT LADEN WATER SHALL BE DISCHARGED DIRECTLY INTO THE STREAM.
   b. EROSION AND SEDIMENT CONTROL STRUCTURE LOCATIONS AS DEPICTED ARE APPROXIMATE AND MAY BE ADJUSTED AS DIRECTED BY THE COMPANY INSPECTOR TO ACTUAL SITE CONDITIONS.
   c. SILT FENCE OR STRAW BALE INSTALLATIONS SHALL INCLUDE REMOVABLE SECTIONS TO FACILITATE ACCESS DURING CONSTRUCTION. UTILIZE STRAW BALE BARRIERS ONLY IN LIEU OF A SILT FENCE WHERE FREQUENT ACCESS IS REQUIRED.
   d. SEDIMENT LADEN WATER FROM TRENCH DEWATERING SHALL BE DISCHARGED TO A WELL VEGETATED UPLAND AREA INTO A STRAW BALE DEWATERING STRUCTURE OR GEOTEXTILE FILTER BAG.
   e. SEDIMENT CONTROL STRUCTURES MUST BE IN PLACE AT ALL TIMES ACROSS THE DISTURBED PORTIONS OF THE RIGHT-OF-WAY EXCEPT DURING EXCAVATION/INSTALLATION OF THE CROSSING PIPE.
   f. SOFT DITCH PLUGS MUST REMAIN IN PLACE AT CONVENIENT LOCATIONS TO SEPARATE MAINLINE DITCH FROM THE RIVER CROSSING UNTIL THE RIVER CROSSING IS INSTALLED AND BACKFILLED.
5. PIPE SHALL BE STRUNG AND WELDED FOR READY INSTALLATION PRIOR TO WATERCOURSE TRENCHING.
6. FLUME CAPACITY DURING DRY CROSSING SHALL BE SUFFICIENT TO ACCOMMODATE 1.5 TIMES THE FLOW MEASURED AT THE TIME OF CONSTRUCTION PROVIDED THAT THE FLUMES WILL BE IN PLACE NOT MORE THAN 96 HOURS AND NO PRECIPITATION IS FORECAST. FLUME CAPACITY FOR VEHICLE ACCESS SHALL BE SUFFICIENT TO PASS THE 2 YEAR DESIGN FLOW OR THE FLOW REASONABLY EXPECTED TO OCCUR DURING THE INSTALLATION. EXCESS FLUMES REQUIRED FOR LONGER TERM ACCESS SHALL BE CAPPED DURING DRY CROSSING PROCEDURES.
7. ENSURE THAT THE DAMS AND VEHICLE CROSSING ARE LOCATED FAR ENOUGH APART TO ALLOW FOR A WIDE EXCAVATION.
8. FLUMES ARE TO BE SET WITH 10 PERCENT OF THEIR DIAMETER BELOW STREAMBED LEVEL WHERE SOIL CONDITIONS PERMIT (OTHERWISE INSTALLED AT STREAM GRADE AND SLOPE.)
9. PLACE IMPERVIOUS DAMS AT EACH END OF THE FLUME, UPSTREAM FIRST, THEN DOWNSTREAM. ACCEPTABLE ALTERNATIVES INCLUDE GRAVEL WITH RIP-RAP PROTECTION, SAND BAGS, STEEL PLATE AND ROCKFILL. DURING INSTALLATION, INSTALL AN IMPERVIOUS MEMBRANE, IF NECESSARY, TO LIMIT LEAKAGE. DAMS MAY NEED KEYING INTO THE BANK AND STREAMBED.
   EXCAVATE TRENCH THROUGH PLUGS AND UNDER FLUME FROM BOTH SIDES. WORK IS TO BE COMPLETED AS QUICKLY AS POSSIBLE.
   a. LOWER IN PIPE BY PASSING UNDER FLUME AND BACKFILL IMMEDIATELY WITH SPOIL MATERIAL.
   b. IT IS NOT NECESSARY TO DEWATER THE IN-STREAM TRENCH, HOWEVER, DISPLACED WATER SHALL BE PUMPED TO A STABLE UPLAND AREA TO AVOID OVERTOPPING OF DAMS DURING PIPE PLACEMENT.
   c. IF THE SPOIL MATERIAL IS NOT SUITABLE, USE IMPORTED CLEAN GRANULAR MATERIAL.
   d. IF BLASTING IS REQUIRED, USE CONTROLLED BLASTING TECHNIQUES TO PREVENT DAMAGE TO THE FLOW CONVEYANCE SYSTEM. ALTERNATIVELY, BLASTING MAY BE ACCOMPLISHED PRIOR TO THE FLUME INSTALLATION BY DRILLING THROUGH THE OVERBURDEN.
10. EXCAVATED MATERIAL MUST NOT BE STOCKPILED WITHIN 10 FT. OF THE WATERCOURSE. THIS MATERIAL SHALL BE CONTAINED TO PREVENT SATURATED SOIL FROM FLOWING BACK INTO THE WATERCOURSE.
11. DEWATERING OF THE ONLAND TRENCH SHOULD OCCUR IN A STABLE VEGETATED AREA A MINIMUM OF 50 FT. FROM ANY WATERBODY. THE PUMP DISCHARGE SHOULD BE DIRECTED ONTO A STABLE SPILL PAD CONSTRUCTED OF ROCKFILL OR TIMBERS TO PREVENT LOCALIZED EROSION. THE DISCHARGE WATER SHOULD ALSO BE FORCED INTO SHEET FLOW IMMEDIATELY BEYOND THE SPILL PAD BY USING STRAW BALES AND THE NATURAL TOPOGRAPHY.
12. FLUMES SHOULD BE REMOVED AS SOON AS POSSIBLE, WHEN NO LONGER REQUIRED FOR PIPE LAYING OR FOR ROAD ACCESS, IN THE FOLLOWING MANNER:
   a. REMOVE THE VEHICLE CROSSING RAMP. BANKS ARE TO BE RESTORED TO A STABLE ANGLE AND PROTECTED WITH EROSION RESISTANT MATERIAL COMPATIBLE WITH THE FLOW CONDITIONS (E.G., EROSION CONTROL BLANKETS, CRIBBING, ROCK RIP-RAP, ETC.) TO THE MAXIMUM EXTENT POSSIBLE BEFORE REMOVING THE DAMS.
   b. REMOVE DOWNSTREAM DAM.
   c. REMOVE UPSTREAM DAM.
   d. REMOVE FLUME.
   e. COMPLETE BANK TRIMMING AND EROSION PROTECTION. IF SANDBAGS ARE USED FOR THE DAMS, PLACE AND REMOVE BY HAND TO AVOID EQUIPMENT BREAKING BAGS.
13. RESTORE THE STREAMBED AND BANKS TO APPROXIMATE PRE-CONSTRUCTION CONTOURS, BUT NOT TO EXCEED 2 HORIZONTAL TO 1 VERTICAL.
   a. INSTALL PERMANENT EROSION AND SEDIMENT CONTROL STRUCTURES AS INDICATED ON A SITE SPECIFIC BASIS. IN THE ABSENCE OF SITE SPECIFIC INFORMATION, A FLEXIBLE CHANNEL LINER SUCH AS NAG C125 OR C350 WHICH IS CAPABLE OF WITHSTANDING ANTICIPATED FLOW SHALL BE INSTALLED. ALTERNATIVELY, ROCK RIP-RAP SHALL BE INSTALLED.
   b. ANY MATERIALS PLACED IN THE STREAM TO FACILITATE CONSTRUCTION SHALL BE REMOVED DURING RESTORATION. BANKS SHALL BE STABILIZED AND TEMPORARY SEDIMENT BARRIERS INSTALLED AS SOON AS POSSIBLE AFTER CROSSING, BUT WITHIN 24 HOURS OF COMPLETING THE CROSSING.
   c. MAINTAIN A SILT FENCE OR STRAW BALE BARRIER ALONG THE WATER COURSE UNTIL VEGETATION IS ESTABLISHED IN ADJACENT DISTURBED AREAS.

REVISIONS
01 REVISED TITLE
02 2010-10-11 REVISED TITLE BLOCK

TransCanada
In business to deliver

exp Energy Services Inc.
t: +1.850.385.5441 | f: +1.850.385.5523
1300 Metropolitan Blvd
Tallahassee, FL 32308
USA
www.exp.com

DESIGNER: JMP (NAME) 2010-10-21 (DATE)	KEYSTONE XL PROJECT		
	FIA # 4359	CHAINAGE:	DISCIPLINE # 03
	TITLE: DETAIL 13A TYPICAL DRY FLUME CROSSING METHOD – CONSTRUCTION PROCEDURES		
CHECKED BY: WSF / DESIGN CHECKER: RW P7100	SCALE N.T.S.	DWG No 4359-03-ML-03-708	REV 02

TC_A4_BR.DWG 8.5X11

CADD DRAWING: DO NOT MAKE MANUAL REVISIONS

THESE ARE TYPICAL DRAWINGS; ACTUAL SITE CONDITIONS MAY VARY FROM THE SITE GRAPHICALLY REPRESENTED.

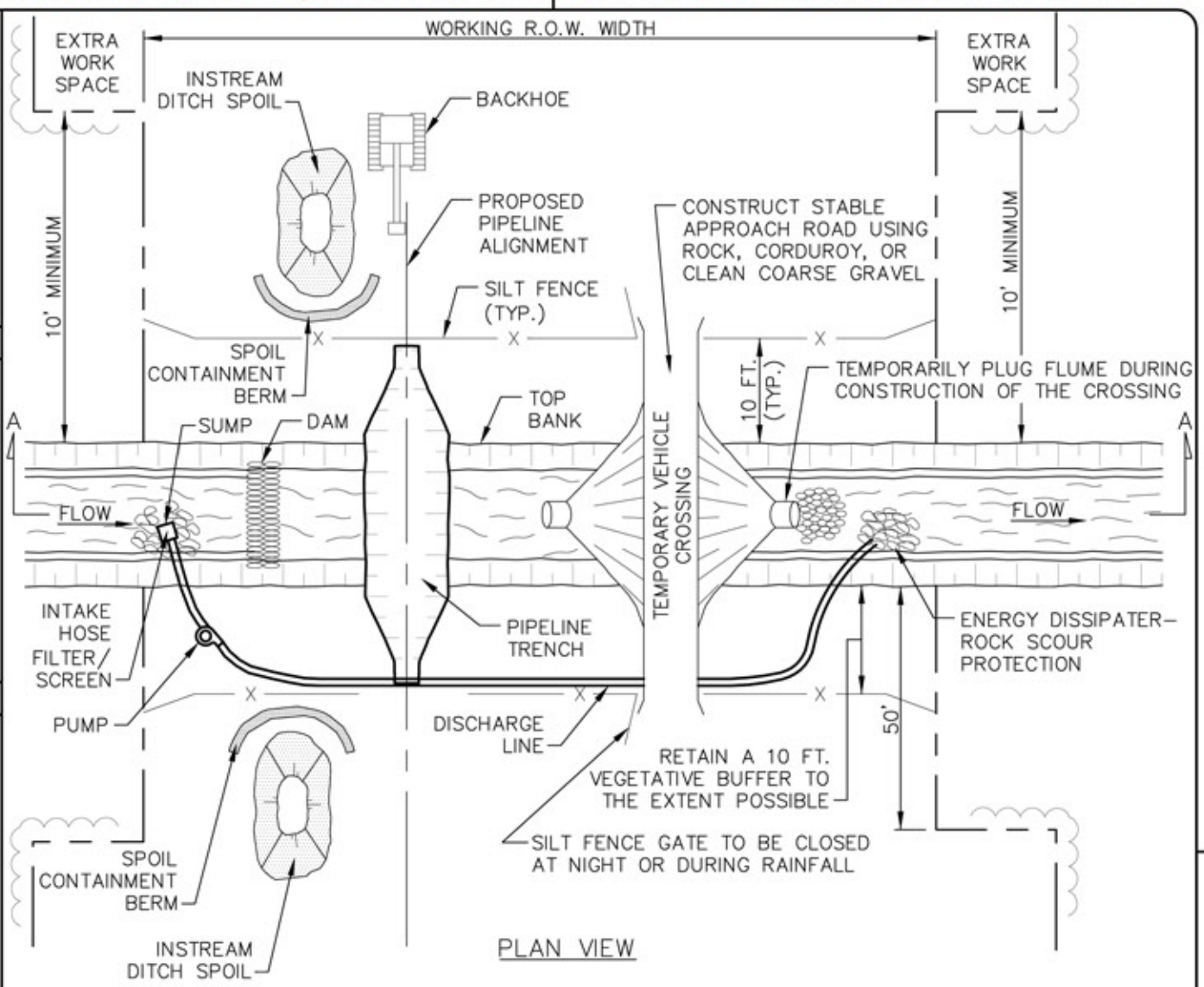

PLAN VIEW

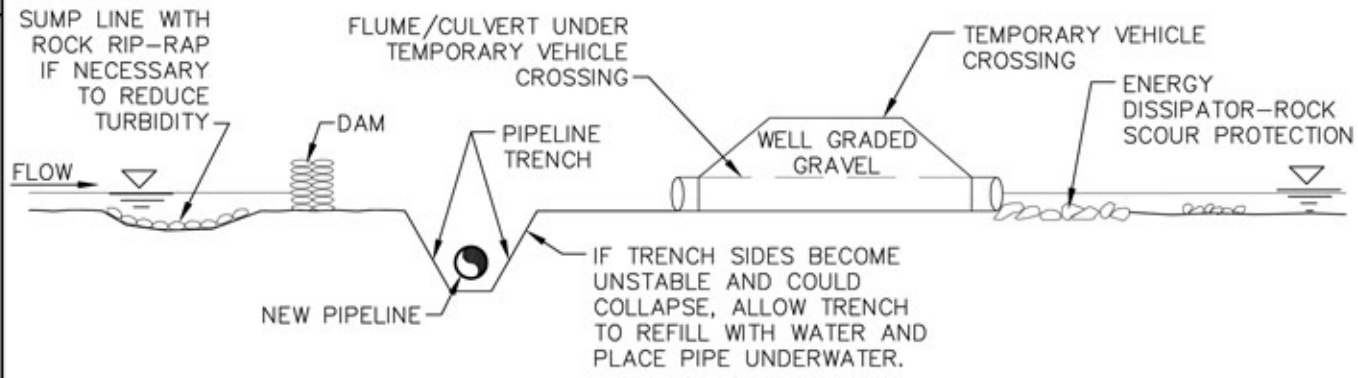

SECTION A-A

NOTES:

1. PIPELINE PLACEMENT WITHIN RIGHT-OF-WAY CONCEPTUAL ONLY.
2. SEE DETAIL 14A FOR CONSTRUCTION PROCEDURES.

REVISIONS 01 2010-10-11 REVISED TITLE BLOCK

TransCanada
In business to deliver

exp Energy Services Inc.
t: +1.850.385.5441 | f: +1.850.385.5523
1300 Metropolitan Blvd
Tallahassee, FL 32308
USA
www.exp.com

DESIGNER: JMP (NAME) 2010-10-21 (DATE)

CHECKED BY: WSF

DESIGN CHECKER: RW

P7100

KEYSTONE XL PROJECT

FIA # 4359 | CHAINAGE: | DISCIPLINE # 03

TITLE

DETAIL 14
TYPICAL DAM AND PUMP CROSSING

SCALE N.T.S. | DWG No 4359-03-ML-03-709 | REV 01

TC_A4_BR.DWG 8.5X11

CADD DRAWING: DO NOT MAKE MANUAL REVISIONS

THESE ARE TYPICAL DRAWINGS; ACTUAL SITE CONDITIONS MAY VARY FROM THE SITE GRAPHICALLY REPRESENTED.

CONSTRUCTION PROCEDURES:

1. WHERE NECESSARY, OBTAIN PRIOR APPROVAL BEFORE USING THE DAM AND PUMP METHOD.
2. IF THERE IS ANY FLOW IN THE WATERCOURSE, INSTALL PUMPS TO MAINTAIN STREAMFLOW AROUND THE BLOCKED OFF SECTIONS OF CHANNEL. THE PUMP IS TO HAVE 1.5 TIMES THE PUMPING CAPACITY OF ANTICIPATED FLOW. A SECOND STANDBY PUMP OF EQUAL CAPACITY IS TO BE READILY AVAILABLE AT ALL TIMES. AN ENERGY DISSIPATER IS TO BE BUILT TO ACCEPT PUMP DISCHARGE WITHOUT STREAMBED OR STREAMBANK EROSION. IF THE CROSSING IS PROLONGED BEYOND ONE DAY THE OPERATION NEEDS TO BE MONITORED OVERNIGHT.
3. SCHEDULE INSTREAM ACTIVITY FOR LOW FLOW PERIODS IF POSSIBLE.
4. MARK OUT AND MAINTAIN LIMITS OF AUTHORIZED WORK AREAS WITH FENCING OR FLAGGING TAPE TO AVOID UNNECESSARY DISTURBANCE OF VEGETATION. ENSURE EQUIPMENT OPERATORS WORKING ON THE CROSSING HAVE BEEN BRIEFED ABOUT THIS PLAN AND THE MEASURES NEEDED TO PROTECT WATER QUALITY. INSTALL PRE-WORK SEDIMENT CONTROL MEASURES AS SPECIFIED IN THE PLAN. ALL NECESSARY EQUIPMENT AND MATERIALS TO BUILD THE DAMS AND TO PUMP WATER MUST BE ON SITE OR READILY AVAILABLE PRIOR TO COMMENCING IN-WATER CONSTRUCTION. PIPE SHOULD BE STRUNG, WELDED AND COATED AND READY FOR INSTALLATION PRIOR TO WATERCOURSE TRENCHING.
5. CONTRACTOR SHALL SUPPLY, INSTALL AND MAINTAIN SEDIMENT CONTROL STRUCTURES, AS DEPICTED AND ALONG DOWN GRADIENT SIDES OF WORK AREAS AND STAGING AREAS SUCH THAT NO HEAVILY SILT LADEN WATER ENTERS STREAM.
   a. NO HEAVILY SILT LADEN WATER SHALL BE DISCHARGED DIRECTLY INTO THE STREAM.
   b. EROSION AND SEDIMENT CONTROL STRUCTURE LOCATIONS AS DEPICTED ARE APPROXIMATE AND MAY BE ADJUSTED AS DIRECTED BY THE COMPANY INSPECTOR TO ACTUAL SITE CONDITIONS.
   c. SILT FENCE OR STRAW BALE INSTALLATIONS SHALL INCLUDE REMOVABLE SECTIONS TO FACILITATE ACCESS DURING CONSTRUCTION. UTILIZE STRAW BALE BARRIERS ONLY IN LIEU OF A SILT FENCE WHERE FREQUENT ACCESS IS REQUIRED.
   d. SEDIMENT LADEN WATER FROM TRENCH DEWATERING SHALL BE DISCHARGED TO A WELL VEGETATED UPLAND AREA INTO A STRAW BALE DEWATERING STRUCTURE OR GEOTEXTILE FILTER BAG.
   e. SEDIMENT CONTROL STRUCTURES MUST BE IN PLACE AT ALL TIMES ACROSS THE DISTURBED PORTIONS OF THE RIGHT-OF-WAY EXCEPT DURING EXCAVATION/INSTALLATION OF THE CROSSING PIPE.
   f. SOFT DITCH PLUGS MUST REMAIN IN PLACE AT CONVENIENT LOCATIONS TO SEPARATE MAINLINE DITCH FROM THE RIVER CROSSING UNTIL THE RIVER CROSSING IS INSTALLED AND BACKFILLED.
6. TO THE EXTENT POSSIBLE, MAINTAIN A MINIMUM 10 FEET VEGETATIVE BUFFER STRIP BETWEEN DISTURBED AREAS AND THE WATERCOURSE. INSTALL AND MAINTAIN A SILT FENCE UPSLOPE OF THE BUFFER STRIP ON EACH SIDE OF THE WATERCOURSE. THE SILT FENCE SHOULD INCORPORATE REMOVABLE "GATES" AS REQUIRED TO ALLOW ACCESS WHILE MAINTAINING EASE OF REPLACEMENT FOR OVERNIGHT OR DURING PERIODS OF RAINFALL.
7. CONSTRUCT A TEMPORARY SUMP UPSTREAM OF THE DAM AND LINE WITH ROCKFILL IF A NATURAL POOL DOES NOT EXIST. INSTALL THE PUMP OR PUMP INTAKE IN THE POOL OR SUMP. DISCHARGE WATER ONTO AN ENERGY DISSIPATER DOWNSTREAM OF THE WORK AREA.
8. EXCAVATED MATERIAL MUST NOT BE STOCKPILED WITHIN 10 FT. OF THE WATERCOURSE. THIS MATERIAL MUST BE CONTAINED WITHIN BERM CONTAINMENT, WITH SECONDARY SILT FENCE PROTECTION TO PREVENT SATURATED SOIL FROM FLOWING BACK INTO THE WATERCOURSE.
9. CHEMICALS, FUELS, LUBRICATING OILS SHALL NOT BE STORED AND EQUIPMENT REFUELED WITHIN 100 FT. OF THE WATERBODY. PUMPS ARE TO BE REFUELED AS PER THE SPCC PLANS.
10. STAGING AREAS ARE TO BE LOCATED AT LEAST 10 FT. FROM THE WATER'S EDGE (WHERE TOPOGRAPHIC CONDITIONS PERMIT) AND SHALL BE THE MINIMUM SIZE NEEDED.
11. DAMS ARE TO BE MADE OF STEEL PLATE, INFLATABLE PLASTIC DAM, SAND BAGS, COBBLES, WELL GRADED COARSE GRAVEL FILL, OR ROCK FILL. DAMS MAY NEED KEYING INTO THE BANKS AND STREAMBED. ENSURE THAT THE DAM AND VEHICLE CROSSING ARE LOCATED FAR ENOUGH APART TO ALLOW FOR A WIDE EXCAVATION. CAP FLUMES USED UNDER VEHICLE CROSSING DURING DRY CROSSING.
12. DEWATER AREA BETWEEN DAMS IF POSSIBLE. DEWATERING SHOULD OCCUR IN A STABLE VEGETATIVE AREA A MINIMUM OF 50 FT. FROM ANY WATERBODY. THE PUMP DISCHARGE SHOULD BE DISCHARGED ONTO A STABLE SPILL PAD CONSTRUCTED OF ROCKFILL SANDBAGS, OR TIMBERS TO PREVENT LOCALIZED EROSION. THE DISCHARGE WATER SHOULD ALSO BE FORCED INTO SHEET FLOW IMMEDIATELY BEYOND THE SPILL PAD BY USING STRAW BALES AND THE NATURAL TOPOGRAPHY DISCHARGED WATER SHALL NOT BE ALLOWED TO FLOW INTO ANY WATERCOURSE OR WETLAND. IF IT IS NOT POSSIBLE TO DEWATER THE EXCAVATION DUE TO SOILS WITH A HIGH HYDRAULIC CONDUCTIVITY, THE EXCAVATION AND PIPE PLACEMENT IS TO BE CARRIED OUT IN THE STANDING WATER. PUMP ANY DISPLACED WATER AS DESCRIBED ABOVE TO PREVENT OVERTOPPING OF DAMS.
13. EXCAVATE TRENCH THROUGH PLUGS AND STREAMBED FROM BOTH SIDES, RE-POSITIONING DISCHARGE HOSE AS NECESSARY. LOWER THE PIPE IN THE TRENCH AND BACKFILL IMMEDIATELY. DURING THIS OPERATION WORK IS TO BE COMPLETED AS QUICKLY AS POSSIBLE.
14. CONTRACTOR SHALL RESTORE THE STREAM BED AND BANKS TO APPROXIMATE PRE-CONSTRUCTION CONTOURS, BUT NOT TO EXCEED 2 HORIZONTAL TO 1 VERTICAL.
   a. CONTRACTOR SHALL INSTALL PERMANENT EROSION AND SEDIMENT CONTROL STRUCTURES AS INDICATED ON A SITE SPECIFIC BASIS. IN THE ABSENCE OF SITE SPECIFIC INFORMATION, A FLEXIBLE CHANNEL LINER SUCH AS NAG C125 OR C350 WHICH IS CAPABLE OF WITHSTANDING ANTICIPATED FLOW SHALL BE INSTALLED. ALTERNATIVELY, ROCK RIP-RAP SHALL BE INSTALLED.
   b. ANY MATERIALS PLACED IN THE STREAM TO FACILITATE CONSTRUCTION SHALL BE REMOVED DURING RESTORATION. BANKS SHALL BE STABILIZED AND TEMPORARY SEDIMENT BARRIERS INSTALLED AS SOON AS POSSIBLE AFTER CROSSING, BUT WITHIN 24 HOURS OF COMPLETING THE CROSSING.
   c. MAINTAIN A SILT FENCE OR STRAW BALE BARRIER ALONG THE WATER COURSE UNTIL VEGETATION IS ESTABLISHED IN ADJACENT DISTURBED AREAS.
15. WHEN THE STREAMBED HAS BEEN RESTORED, THE CREEK BANKS ARE TO BE CONTOURED TO A STABLE ANGLE AND PROTECTED WITH EROSION RESISTANT MATERIAL COMPATIBLE WITH FLOW VELOCITY BETWEEN DAMS (E.G., EROSION CONTROL BLANKETS, CRIBBING, ROCK RIP-RAP, ETC.). THE DAMS ARE TO BE REMOVED DOWNSTREAM FIRST. KEEP PUMP RUNNING UNTIL NORMAL FLOW IS RESUMED. COMPLETE BANK TRIMMING AND EROSION PROTECTION. IF SANDBAGS ARE USED FOR THE DAMS, PLACE AND REMOVE BY HAND TO AVOID EQUIPMENT BREAKING BAGS.

REVISIONS | 01 REVISED TITLE | 02 2010-10-11 REVISED TITLE BLOCK

TransCanada
In business to deliver
exp Energy Services Inc.
t: +1.850.385.5441 | f: +1.850.385.5523
1300 Metropolitan Blvd
Tallahassee, FL 32308
USA
www.exp.com

DESIGNER:		KEYSTONE XL PROJECT		
JMP (NAME)	2010-10-21 (DATE)	FIA # 4359	CHAINAGE:	DISCIPLINE # 03
		TITLE: DETAIL 14A TYPICAL DAM AND PUMP CROSSING – CONSTRUCTION PROCEDURES		
CHECKED BY: WSF	DESIGN CHECKER: RW P7100	SCALE N.T.S.	DWG No 4359-03-ML-03-710	REV 02

TC_A4_BR.DWG 8.5X11

CADD DRAWING: DO NOT MAKE MANUAL REVISIONS

THESE ARE TYPICAL DRAWINGS; ACTUAL SITE CONDITIONS MAY VARY FROM THE SITE GRAPHICALLY REPRESENTED.

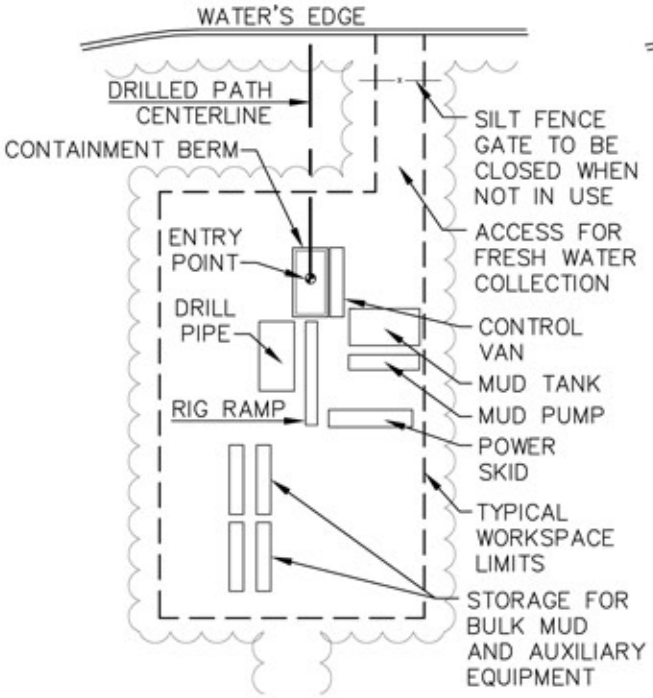

SITE PLAN
ENTRY SIDE

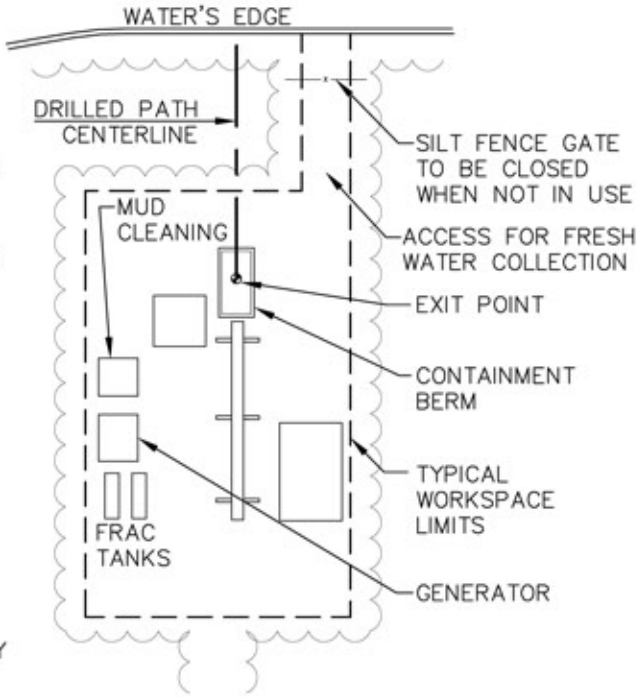

SITE PLAN
EXIT SIDE

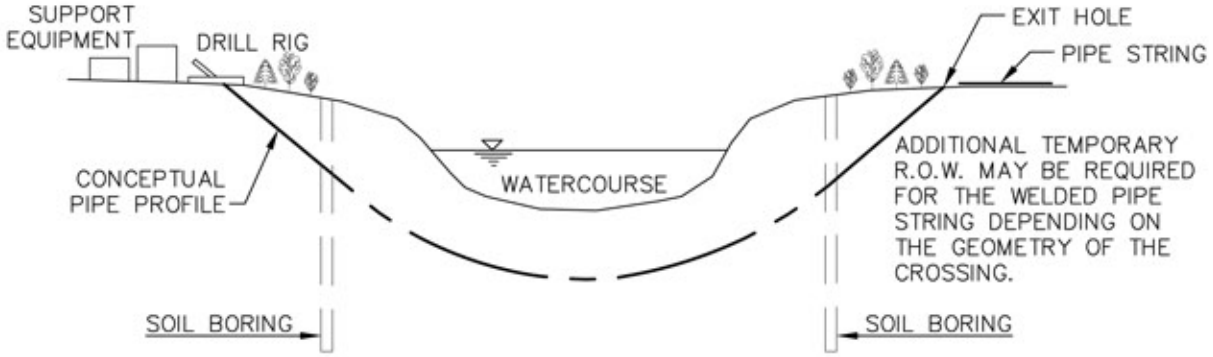

PROFILE

NOTES:

1. SET UP DRILLING EQUIPMENT A MINIMUM OF 100 FEET FROM THE EDGE OF THE WATERCOURSE. LIMIT CLEARING BETWEEN DRILL ENTRY AND EXIT POINT TO HAND CUTTING BRUSH FOR TRACKING WIRES.
2. ENSURE THAT ONLY BENTONITE-BASED DRILLING MUD IS USED.
3. INSTALL SUITABLE DRILLING MUD TANKS OR SUMPS TO PREVENT CONTAMINATION OF WATERCOURSE.
4. INSTALL BERMS DOWNSLOPE FROM THE DRILL ENTRY AND ANTICIPATED EXIT POINTS TO CONTAIN ANY RELEASE OF DRILLING MUD.
5. DISPOSE OF DRILLING MUD IN ACCORDANCE WITH THE APPROPRIATE REGULATORY AUTHORITY REQUIREMENTS.

REVISIONS
01 UPDATED DRAWING NOTES
02 2010-10-11 REVISED TITLE BLOCK

TransCanada
In business to deliver
exp Energy Services Inc.
t: +1.850.385.5441 | f: +1.850.385.5523
1300 Metropolitan Blvd
Tallahassee, FL 32308
USA
www.exp.com

DESIGNER: JMP (NAME) 2010-10-21 (DATE)	KEYSTONE XL PROJECT		
	FIA # 4359	CHAINAGE:	DISCIPLINE # 03
	TITLE: DETAIL 15 TYPICAL HORIZONTAL DRILL (HDD) SITE PLAN & PROFILE		
CHECKED BY: WSF / DESIGN CHECKER: RW P7100	SCALE N.T.S.	DWG No 4359-03-ML-03-711	REV 02

TC_A4_BR.DWG 8.5X11

CADD DRAWING: DO NOT MAKE MANUAL REVISIONS

THESE ARE TYPICAL DRAWINGS; ACTUAL SITE CONDITIONS MAY VARY FROM THE SITE GRAPHICALLY REPRESENTED.

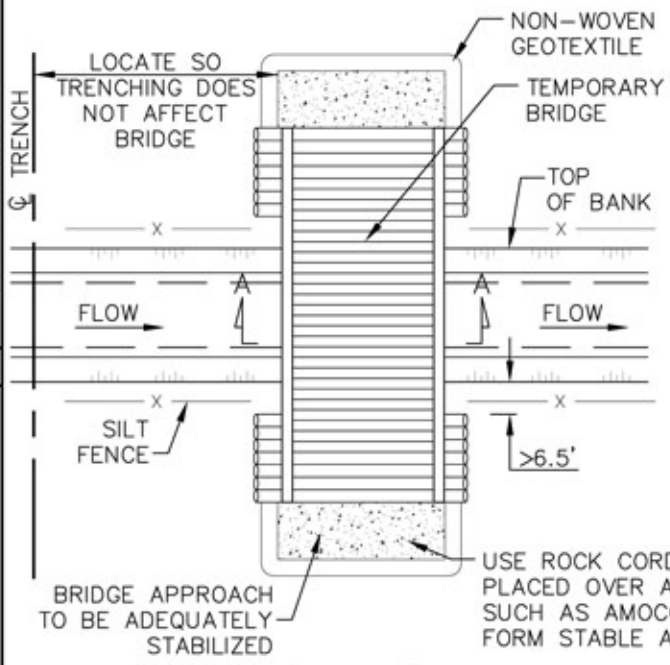

PLAN VIEW

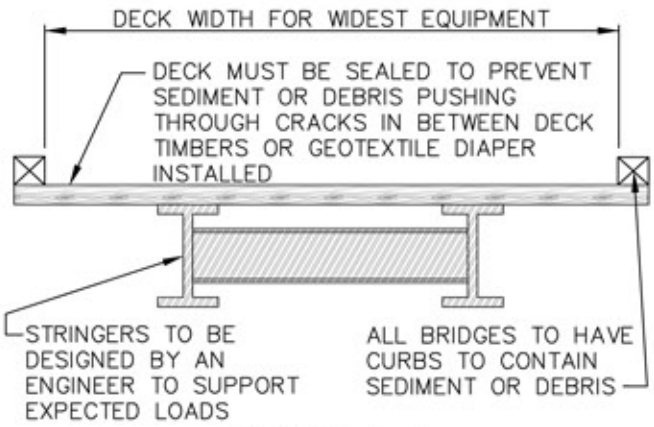

SECTION A–A

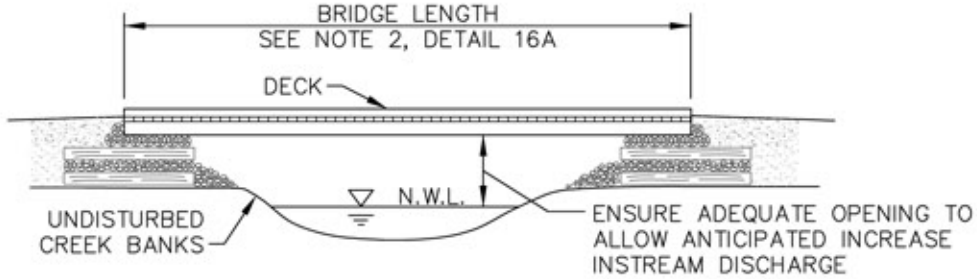

BRIDGE PROFILE

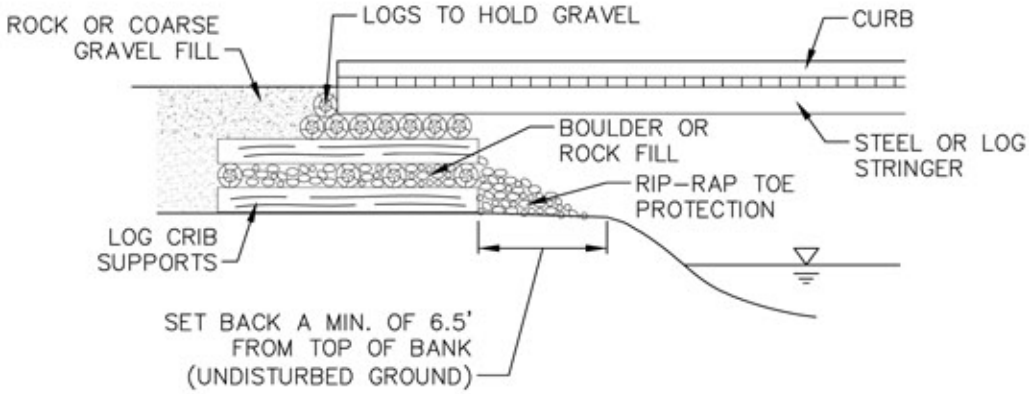

TYPICAL TEMPORARY CRIB ABUTMENT

REVISIONS 01 2010-10-11 REVISED TITLE BLOCK

TransCanada
In business to deliver

exp Energy Services Inc.
t: +1.850.385.5441 | f: +1.850.385.5523
1300 Metropolitan Blvd
Tallahassee, FL 32308
USA
www.exp.com

DESIGNER: JMP (NAME) 2010-10-21 (DATE)

CHECKED BY: WSF

DESIGN CHECKER: RW P7100

KEYSTONE XL PROJECT

FIA # 4359 | CHAINAGE: | DISCIPLINE # 03

TITLE: DETAIL 16 TYPICAL TEMPORARY BRIDGE CROSSING

SCALE N.T.S. | DWG No 4359-03-ML-03-712 | REV 01

TC_A4_BR.DWG 8.5X11

CADD DRAWING: DO NOT MAKE MANUAL REVISIONS

THESE ARE TYPICAL DRAWINGS; ACTUAL SITE CONDITIONS MAY VARY FROM THE SITE GRAPHICALLY REPRESENTED.

CONSTRUCTION PROCEDURES:

IN GENERAL TERMS, THE FOLLOWING IS A SEQUENCE OF CONSTRUCTION PROCEDURES THAT ARE RECOMMENDED TO BE FOLLOWED FOR TEMPORARY BRIDGE CROSSINGS:

1. A PORTABLE BRIDGE, FLEXI-FLOAT OR FLUMED VEHICLE CROSSING MAY BE SUBSTITUTED FOR THE TEMPORARY BRIDGE. IT IS IMPORTANT THAT THE SIZE OF THE TOTAL OPENING BE SELECTED SO THE STRUCTURE CAN SAFELY PASS FLOOD FLOWS THAT CAN REASONABLY BE EXPECTED TO OCCUR DURING THE LIFE OF THE CROSSING.

2. DETERMINE BRIDGE LENGTH REQUIRED AND FOLLOW EITHER METHOD A) OR B) FOR DETERMINING THE OPENING SIZE. IF A) IS FOLLOWED, A MINIMUM 6.5 FT. SETBACK FROM TOP OF BANK MUST BE PRESERVED AS A "NO DISTURBANCE AREA". IF ABUTMENTS OR PIERS IN THE STREAMBED ARE REQUIRED, METHOD B) IS TO BE FOLLOWED.

3. INSTALL THE BRIDGE IN A MANNER THAT WILL MINIMIZE SEDIMENT ENTERING THE WATER. STRINGERS MUST BE DESIGNED TO SUPPORT THE LOADS EXPECTED ON THE BRIDGE. CURBS MUST BE INSTALLED ALONG THE EDGE OF THE DECK TO CONTAIN SEDIMENT AND DEBRIS ON THE BRIDGE. FASTENERS CONNECTING COMPONENTS MUST BE STRONG ENOUGH TO HOLD THEM IN POSITION DURING THE LIFE OF THE BRIDGE. CRIBS ARE TO BE FILLED WITH ROCK OR COBBLE. RIP-RAP EROSION PROTECTION IS TO BE PLACED AROUND THE CRIBS AND ON ANY FILL SLOPES PROJECTING INTO THE WATERBODY.

4. ROAD APPROACHES LEADING TO THE BRIDGE MUST BE RAISED AND STABLE SO EQUIPMENT LOADS ARE SUPPORTED A SUFFICIENT DISTANCE BACK FROM THE WATER TO REDUCE SEDIMENT AND DEBRIS ENTERING THE WATERBODY FROM EQUIPMENT TRACKS. THIS MAY REQUIRE USING MATERIALS SUCH AS GRAVEL, ROCK OR CORDUROY. DO NOT USE SOIL TO CONSTRUCT OR STABILIZE EQUIPMENT BRIDGES. IF CUTS ARE NEEDED TO OBTAIN A SATISFACTORY GRADE, THEY ARE TO BE DUG WITH SIDE DITCHES AND STABLE SLOPES. EROSION AND SEDIMENT CONTROL MEASURES ARE TO BE INSTALLED TO KEEP SEDIMENT ON LAND (E.G., SILT FENCING, FILTER CLOTH, RIP-RAP, SEED AND MULCH, ETC.)

5. MAINTAIN A SILT FENCE ON EACH SIDE OF THE WATERBODY EXTENDING A MINIMUM OF 10 FEET BEYOND THE WIDTH OF DISTURBANCE UNTIL VEGETATION HAS BEEN ESTABLISHED IN UPSLOPE AREAS.

6. PERIODICALLY CHECK BRIDGE INSTALLATION AND REMOVE ANY BUILD-UP OF SEDIMENT OR DEBRIS ON THE BRIDGE. DISPOSE OF THIS MATERIAL IN A LOW LYING AREA AT LEAST 100 FEET FROM THE WATERBODY.

7. REMOVE TEMPORARY CROSSINGS AS SOON AS POSSIBLE AFTER FINAL CLEAN-UP. MATERIALS PLACED ALONG THE WATERBODY SHOULD BE COMPLETELY REMOVED DURING FINAL CLEAN-UP. REMOVAL SHOULD NOT OCCUR OUTSIDE THE CONSTRUCTION WINDOWS. SURPLUS GRAVEL IS TO BE SPREAD ON THE RIGHT-OF-WAY AS GRAVEL SHEETING, IF GRADATION IS SUITABLE, OR MOVED AT LEAST 100 FEET FROM TOP OF BANK FOR DISPOSAL. BRIDGE MATERIALS ARE TO BE REMOVED FROM THE CROSSING AREA. THE WATERBODY BED AND BANKS ARE TO BE RESTORED TO A STABLE ANGLE AND PROTECTED WITH EROSION RESISTANT MATERIAL COMPATIBLE WITH THE EXPECTED FLOW CONDITIONS.

REVISIONS 01 2010-10-11 REVISED TITLE BLOCK

TransCanada
In business to deliver
exp Energy Services Inc.
t: +1.850.385.5441 | f: +1.850.385.5523
1300 Metropolitan Blvd
Tallahassee, FL 32308
USA
www.exp.com

DESIGNER:		KEYSTONE XL PROJECT		
JMP (NAME)	2010-10-21 (DATE)	FIA # 4359	CHAINAGE:	DISCIPLINE # 03
		TITLE: DETAIL 16A TYPICAL TEMPORARY BRIDGE CROSSING – CONSTRUCTION PROCEDURES		
CHECKED BY: WSF	DESIGN CHECKER: RW P7100	SCALE N.T.S.	DWG No 4359-03-ML-03-713	REV 01

TC_A4_BR.DWG 8.5X11

CADD DRAWING: DO NOT MAKE MANUAL REVISIONS

THESE ARE TYPICAL DRAWINGS; ACTUAL SITE CONDITIONS MAY VARY FROM THE SITE GRAPHICALLY REPRESENTED.

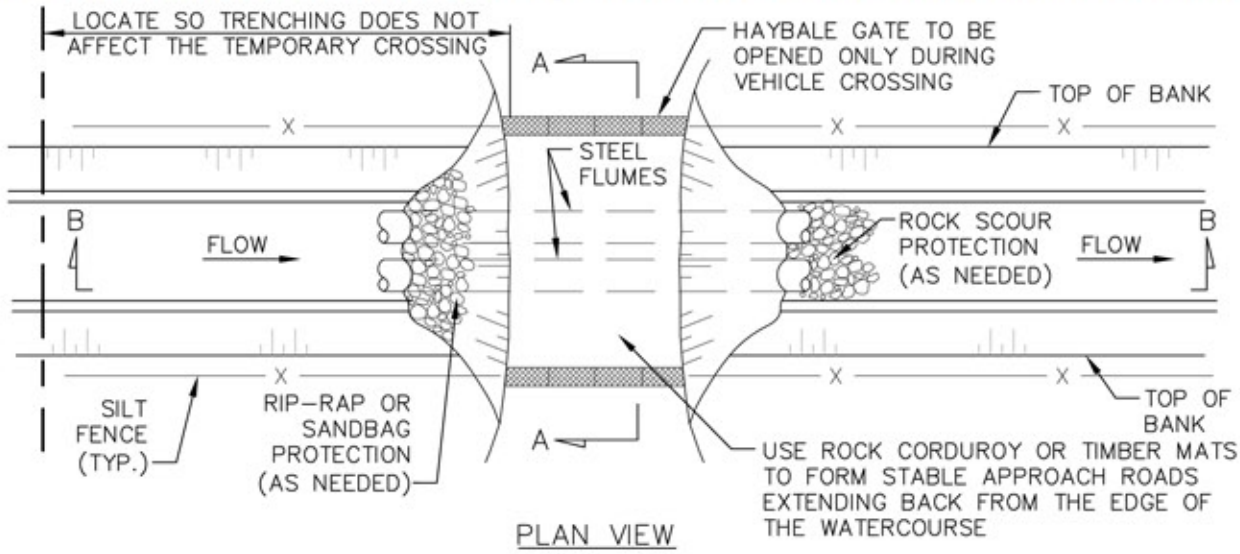

PLAN VIEW

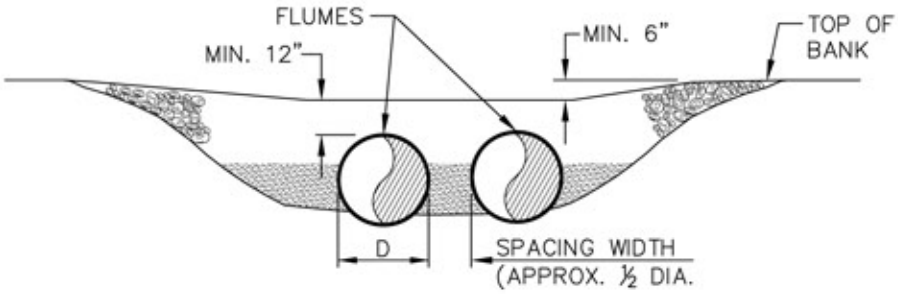

SECTION A–A

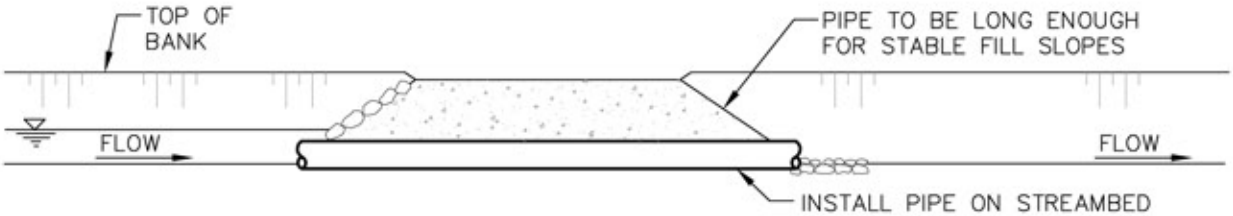

SECTION B–B

CONSTRUCTION PROCEDURES:

THE FOLLOWING IS A SEQUENCE OF CONSTRUCTION AND PROCEDURES MEASURES TO BE FOLLOWED AT ALL TEMPORARY FLUME VEHICLE CROSSINGS.

1. A PORTABLE FLEXI–FLOAT, OR TEMPORARY BRIDGE MAY BE SUBSTITUTED FOR THE TEMPORARY FLUME CROSSING.
2. THE LENGTH OF THE FLUME SHALL BE SUFFICIENT TO SPAN THE ENTIRE AREA REQUIRED FOR VEHICULAR ACCESS, EXTENDING 4 FEET BEYOND TOE OF FILL MATERIAL, SO TRENCHING WILL NOT AFFECT THE ROAD CROSSING. A LONGER PIPE IS TO BE USED, IF NEEDED, TO MAINTAIN STABLE SIDE SLOPES. FLUME CAPACITY TO BE BASED ON THE 2–YEAR DESIGN FLOW OR MAXIMUM FLOW ANTICIPATED TO OCCUR DURING INSTALLATION, AS SPECIFIED IN CONSTRUCTION DOCUMENTS.
3. WHERE PRACTICAL, BACKFILL AROUND THE PIPES AT THE ROAD WITH CLEAN, COARSE ROCK FILL MATERIAL. IF SCOUR IS POSSIBLE, RIP–RAP IS TO BE PLACED ON THE WATERBODY BED DOWNSTREAM OF THE PIPE OUTLET EXTENDING A MINIMUM OF TWO PIPE DIAMETERS. ALTERNATIVELY, TIMBER EQUIPMENT MATS, SAND BAGS OR TIMBER CORDUROY MAY BE USED TO FORM THE TRAVEL SURFACE.
4. TO REDUCE DEBRIS ENTERING THE WATERBODY FROM EQUIPMENT TRACKS, THE APPROACH ROAD LEADING TO THE CULVERT CROSSING MUST BE RAISED AND STABLE SO EQUIPMENT LOADS ARE SUPPORTED A SUFFICIENT DISTANCE BACK FROM THE WATER. IF CUTS ARE NEEDED TO OBTAIN A SATISFACTORY GRADE, THEY ARE TO BE DUG WITH SIDE DITCHES AND STABLE SLOPES. EROSION AND SEDIMENT CONTROL MEASURES ARE TO BE INSTALLED TO LIMIT THE POTENTIAL FOR SEDIMENT TO ENTER THE WATERBODY (E.G., CHECK DAMS, SILT FENCE, RIP–RAP, SEED AND MULCH, SEDIMENT TRAPS, ETC.).
5. PERIODICALLY CHECK THE TEMPORARY CROSSING INSTALLATION AND REMOVE ANY BUILD–UP OF SEDIMENT OR DEBRIS ON THE BRIDGE. DISPOSE OF THIS MATERIAL AT LEAST 100 FEET FROM THE WATERBODY AND ABOVE THE HIGH WATER LEVEL.
6. FOLLOWING COMPLETION OF THE CROSSING, REMOVE ROCKFILL IN/OR AROUND FLUME PIPES FROM THE WATERBODY OR WETLAND.
7. RESTORE STREAM BANKS AND WATERBODY BOTTOM.

REVISIONS 01 2010–10–11 REVISED TITLE BLOCK

TransCanada
In business to deliver

exp Energy Services Inc.
t: +1.850.385.5441 | f: +1.850.385.5523
1300 Metropolitan Blvd
Tallahassee, FL 32308
USA
www.exp.com

DESIGNER:		KEYSTONE XL PROJECT		
JMP (NAME) 2010–10–21 (DATE)		FIA # 4359	CHAINAGE:	DISCIPLINE # 03
		TITLE: DETAIL 17 TYPICAL FLUME BRIDGE CROSSING		
CHECKED BY: WSF	DESIGN CHECKER: RW P7100	SCALE N.T.S.	DWG No 4359–03–ML–03–714	REV 01

TC_A4_BR.DWG 8.5X11

CADD DRAWING: DO NOT MAKE MANUAL REVISIONS

THESE ARE TYPICAL DRAWINGS; ACTUAL SITE CONDITIONS MAY VARY FROM THE SITE GRAPHICALLY REPRESENTED.

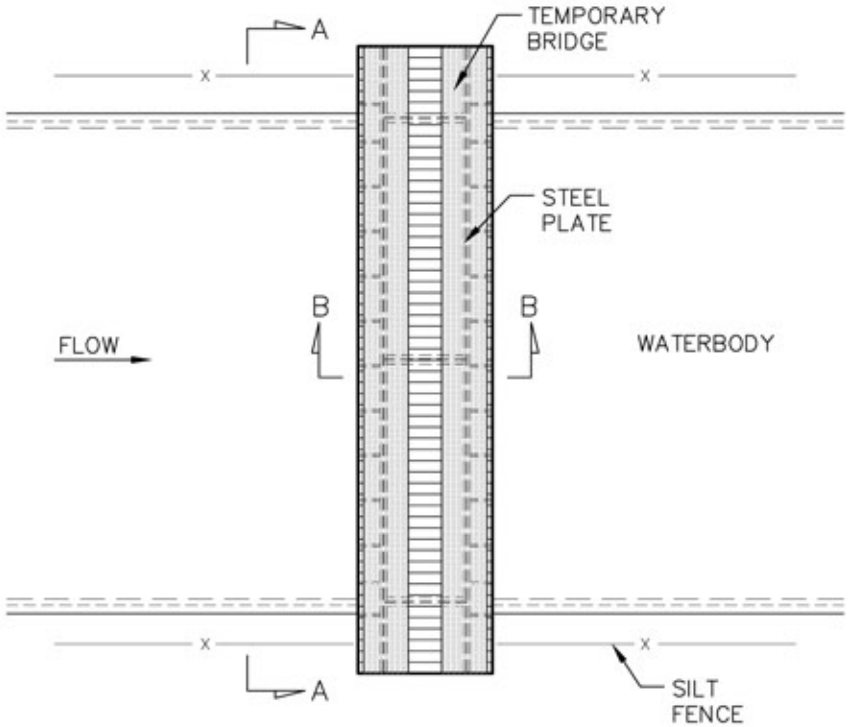

PLAN VIEW

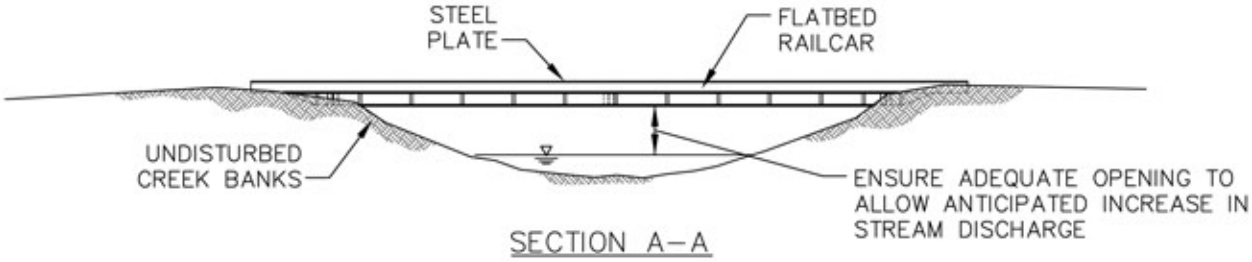

SECTION A–A

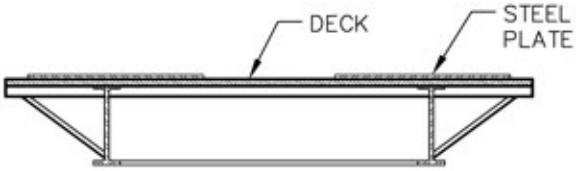

SECTION B–B

REVISIONS 01 2010–10–11 REVISED TITLE BLOCK

TransCanada
In business to deliver

exp Energy Services Inc.
t: +1.850.385.5441 | f: +1.850.385.5523
1300 Metropolitan Blvd
Tallahassee, FL 32308
USA
www.exp.com

DESIGNER: JMP (NAME) 2010–10–21 (DATE)	KEYSTONE XL PROJECT		
	FIA # 4359	CHAINAGE:	DISCIPLINE # 03
	TITLE: DETAIL 18 TYPICAL RAILCAR BRIDGE CROSSING		
CHECKED BY: WSF	DESIGN CHECKER: RW P7100	SCALE N.T.S.	DWG No 4359–03–ML–03–715 REV 01

TC_A4_BR.DWG 8.5X11

CADD DRAWING: DO NOT MAKE MANUAL REVISIONS

THESE ARE TYPICAL DRAWINGS; ACTUAL SITE CONDITIONS MAY VARY FROM THE SITE GRAPHICALLY REPRESENTED.

CONSTRUCTION PROCEDURES:

1. THIS TYPICAL DRAWING PROVIDES FOR A RAILCAR BRIDGE EQUIPMENT CROSSING.

2. BRIDGE SHOULD BE A MINIMUM OF 12 FEET LONGER THAN BANK TO BANK WIDTH.

3. BEST MANAGEMENT PRACTICES UTILIZING EROSION CONTROL DEVICES, SUCH AS HAY BALES AND SILT FENCE ARE REQUIRED TO PREVENT SEDIMENTATION OF THE STREAM. EROSION PROTECTION SHALL BE PLACED ON THE STREAM BANKS.

4. DURING FINAL CLEAN-UP, REMOVE TEMPORARY EQUIPMENT CROSSINGS AS SOON AS POSSIBLE. INSTALLED MATERIALS, SUCH AS HAY BALES AND SILT FENCE MUST BE REMOVED AND DISPOSED IN ACCORDANCE WITH STATE AND LOCAL REGULATIONS AND REQUIREMENTS. THE STREAMBED, BANKS AND AREAS AFFECTED BY CONSTRUCTION OF THE TEMPORARY EQUIPMENT CROSSING SHOULD BE RESTORED TO A STABLE CONDITION. IF REQUIRED TO PREVENT TRANSPORT OF SEDIMENTATION TO THE STREAM, SILT FENCE SHOULD BE INSTALLED AT THE TOP OF THE BANKS.

REVISIONS 01 2010-10-11 REVISED TITLE BLOCK

TransCanada
In business to deliver
exp Energy Services Inc.
t: +1.850.385.5441 | f: +1.850.385.5523
1300 Metropolitan Blvd
Tallahassee, FL 32308
USA
www.exp.com

DESIGNER: JMP (NAME) 2010-10-21 (DATE)

CHECKED BY: WSF

DESIGN CHECKER: RW P7100

KEYSTONE XL PROJECT

FIA # 4359 | CHAINAGE: | DISCIPLINE # 03

TITLE: DETAIL 18A
TYPICAL RAILCAR BRIDGE CROSSING – CONSTRUCTION PROCEDURES

SCALE N.T.S. | DWG No 4359-03-ML-03-716 | REV 01

TC_A4_BR.DWG 8.5X11

CADD DRAWING: DO NOT MAKE MANUAL REVISIONS

THESE ARE TYPICAL DRAWINGS; ACTUAL SITE CONDITIONS MAY VARY FROM THE SITE GRAPHICALLY REPRESENTED.

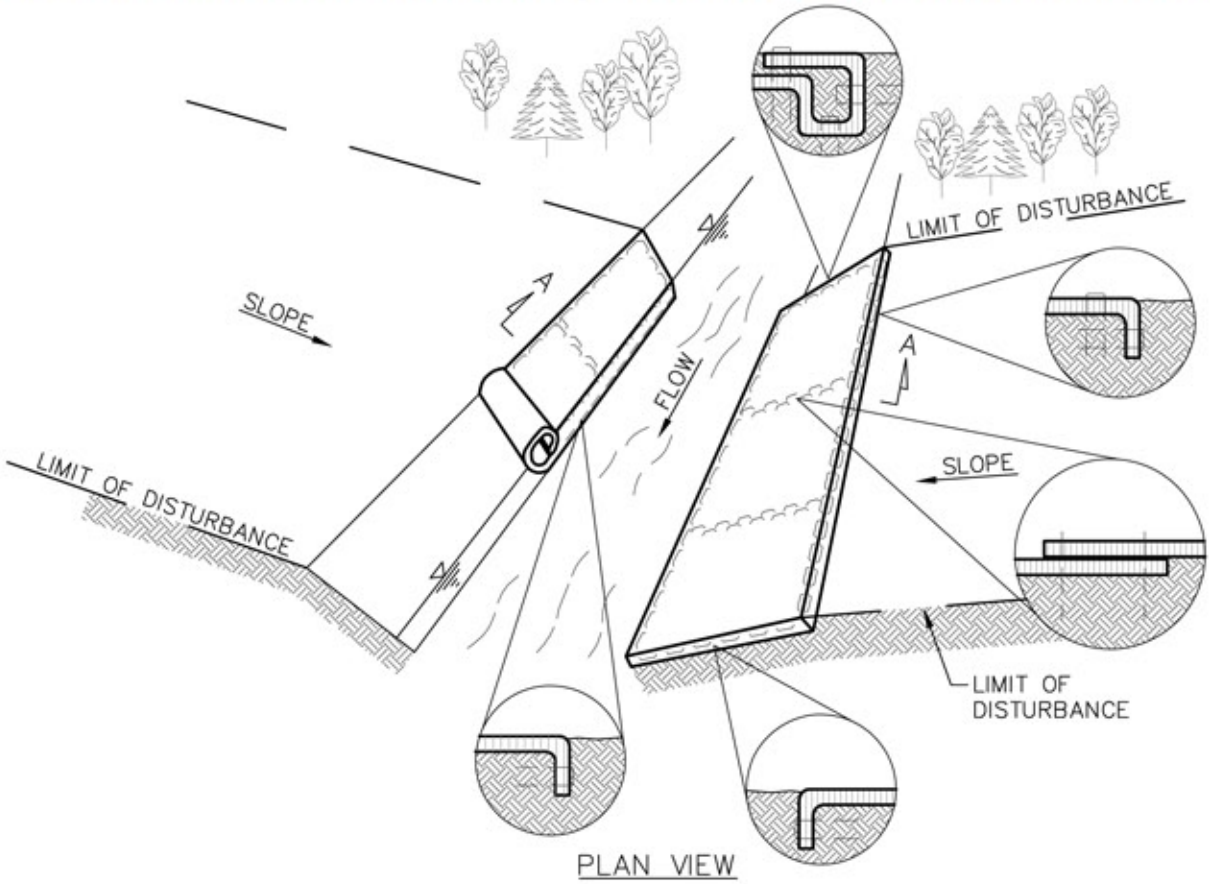

PLAN VIEW

SECTION A–A

NOTES:

1. INSTALL AND ANCHOR LINERS FOLLOWING MANUFACTURER'S INSTRUCTIONS.
2. PREPARE SOIL BEFORE INSTALLING CHANNEL LINER, INCLUDING THE APPLICATION OF
3. SEED. CHANNEL LINERS SHOULD EXTEND COMPLETELY ACROSS DISTURBED BANK AREAS TO PROTECT ERODIBLE SURFACES.
4. BEGIN AT THE END OF THE CHANNEL BY ANCHORING THE LINER IN A TRENCH. BACKFILL AND COMPACT THE TRENCH AFTER STAPLING.
5. ROLL LINER IN DIRECTION OF WATER FLOW.
6. INSTALL LINERS END–OVER–END (SHINGLE STYLE) WITH OVERLAP USING A DOUBLE ROW OF STAGGERED STAPLES 4 INCHES BELOW THE FIRST ROW IN A STAGGERED PATTERN.
7. IN HIGH FLOW CHANNEL APPLICATIONS, A STAPLE CHECK SLOT IS RECOMMENDED AT 30 TO 40 FEET INTERVALS. USE A ROW OF STAPLES 4 INCHES BELOW THE FIRST ROW IN A STAGGERED PATTERN.
8. INSTALL CHANNEL LINER TO THE TOP OF THE DEFINED CHANNEL SECTION. TWO OR MORE ROWS OF BLANKETS MAY BE NECESSARY, THESE LINERS MUST BE OVERLAPPED 4 INCHES AND STAPLED.
9. THE CHANNEL LINER SHOULD EXTEND TO THE BASE OF THE CHANNEL AND STAPLED. FOR CHANNELS WITH VERY LITTLE OR NO FLOW, EXTEND A MINIMUM OF 1 FOOT BELOW THE LOW WATER LEVEL AND STAPLE IN PLACE.
10. INSTALLATION SPECIFICATIONS TO BE MODIFIED AS NECESSARY TO SUIT ACTUAL SITE CONDITIONS.

REVISIONS
01 2008–11–04 UPDATED DRAWING NOTES
02 2010–10–11 REVISED TITLE BLOCK

TransCanada
In business to deliver

exp Energy Services Inc.
t: +1.850.385.5441 | f: +1.850.385.5523
1300 Metropolitan Blvd
Tallahassee, FL 32308
USA
www.exp.com

DESIGNER:		KEYSTONE XL PROJECT		
JMP (NAME)	2010–10–21 (DATE)	FIA # 4359	CHAINAGE:	DISCIPLINE # 03
		TITLE: DETAIL 19 FLEXIBLE CHANNEL LINER INSTALLATION		
CHECKED BY: WSF	DESIGN CHECKER: RW P7100	SCALE N.T.S.	DWG No 4359–03–ML–05–708	REV 02

TC_A4_BR.DWG 8.5X11

CADD DRAWING: DO NOT MAKE MANUAL REVISIONS

THESE ARE TYPICAL DRAWINGS; ACTUAL SITE CONDITIONS MAY VARY FROM THE SITE GRAPHICALLY REPRESENTED.

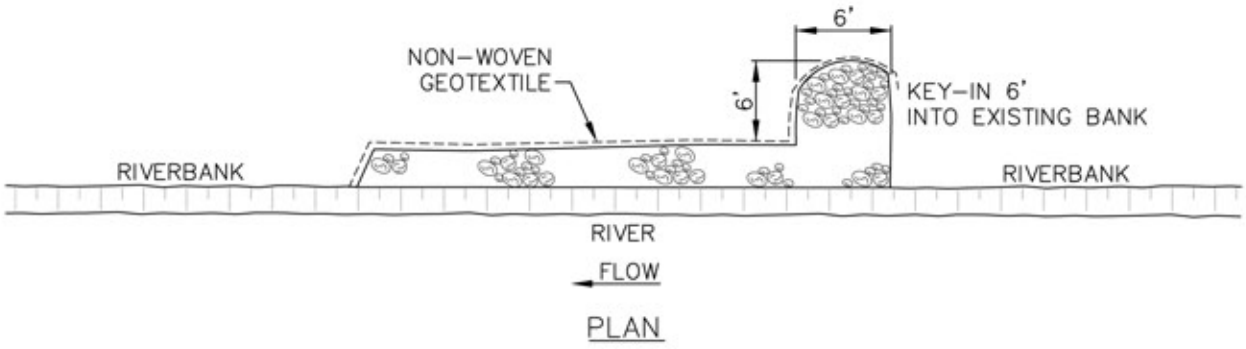

PLAN

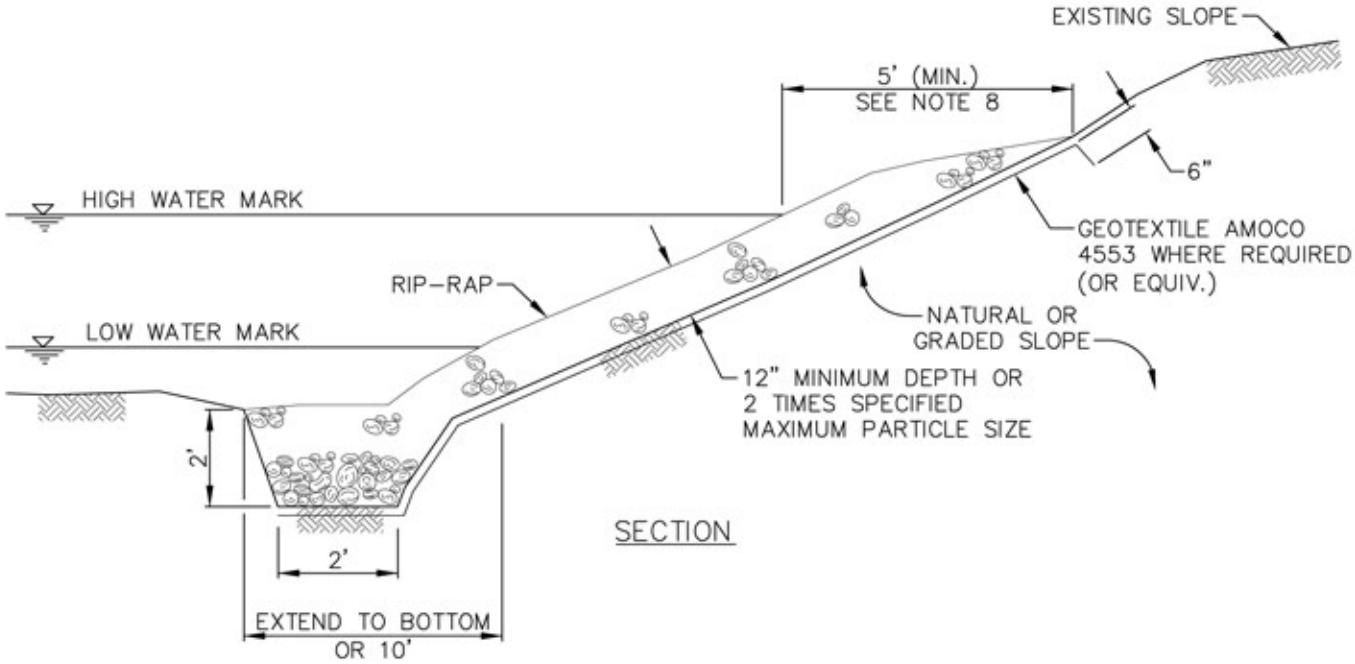

SECTION

NOTES:

1. REMOVE ALL STUMPS, ORGANIC MATERIAL AND PREPARE BANKS TO A STABLE CONFIGURATION TO A MAXIMUM SLOPE OF 2 HORIZONTAL TO 1 VERTICAL.
2. CONSTRUCT TOE TRENCH TO KEY IN BOTTOM OF RIP-RAP PROTECTION.
3. INSTALL FILTER CLOTH (GEOTEXTILE), SUCH AS AMOCO 4553 OR EQUIVALENT, UNDER ROCK WHERE SPECIFIED OR AS DIRECTED BY THE COMPANY. ADJOINING EDGES OF CLOTH SHALL OVERLAP A MINIMUM OF 12".
4. ROCK UTILIZED FOR RIP-RAP SHALL CONSIST OF SOUND, DURABLE ROCK, AND RESISTANT TO WEATHERING. INDIVIDUAL PIECES SHOULD BE ANGULAR, BLOCK SHAPED AND HAVE A MINIMUM SPECIFIC GRAVITY OF 2.2.
5. INSTALL RIP-RAP TO A THICKNESS OF APPROXIMATELY 2 TIMES THE MAXIMUM EQUIVALENT DIAMETER OF THE RIP-RAP. EACH LOAD SHOULD BE WELL GRADED. A WELL GRADED MIXTURE IS COMPOSED 60% (MINIMUM) OF LARGER SIZES WITH 40% OF SMALLER SIZES TO FILL THE VOIDS.
6. SIZE OF RIP-RAP IS DEPENDENT UPON THE PREDICTED FLOW CONDITIONS.
7. KEY IN THE EDGES OF THE RIP-RAP AND FILTER CLOTH TO NATURAL GROUND CONTOURS SO THAT UNDERMINING DOES NOT OCCUR.
8. RIP-RAP IS TO BE INSTALLED TO 2 FEET. ABOVE THE NORMAL HIGH WATER MARK OR 5 FEET ALONG THE SLOPE, WHICHEVER IS LESS.
9. INSTALLATION SPECIFICATIONS TO BE MODIFIED TO SUIT ACTUAL SITE CONDITIONS.

REVISIONS
01 2008-11-04 UPDATED DRAWING NOTES
02 2010-10-11 REVISED TITLE BLOCK

TransCanada
In business to deliver

exp Energy Services Inc.
t: +1.850.385.5441 | f: +1.850.385.5523
1300 Metropolitan Blvd
Tallahassee, FL 32308
USA
www.exp.com

DESIGNER: JMP (NAME) 2010-10-21 (DATE)

CHECKED BY: WSF

DESIGN CHECKER: RW

P7100

KEYSTONE XL PROJECT

FIA # 4359 | CHAINAGE: | DISCIPLINE # 03

TITLE: DETAIL 20 TYPICAL ROCK RIP-RAP

SCALE: N.T.S. | DWG No: 4359-03-ML-05-709 | REV: 02

TC_A4_BR.DWG 8.5X11

CADD DRAWING: DO NOT MAKE MANUAL REVISIONS

THESE ARE TYPICAL DRAWINGS; ACTUAL SITE CONDITIONS MAY VARY FROM THE SITE GRAPHICALLY REPRESENTED.

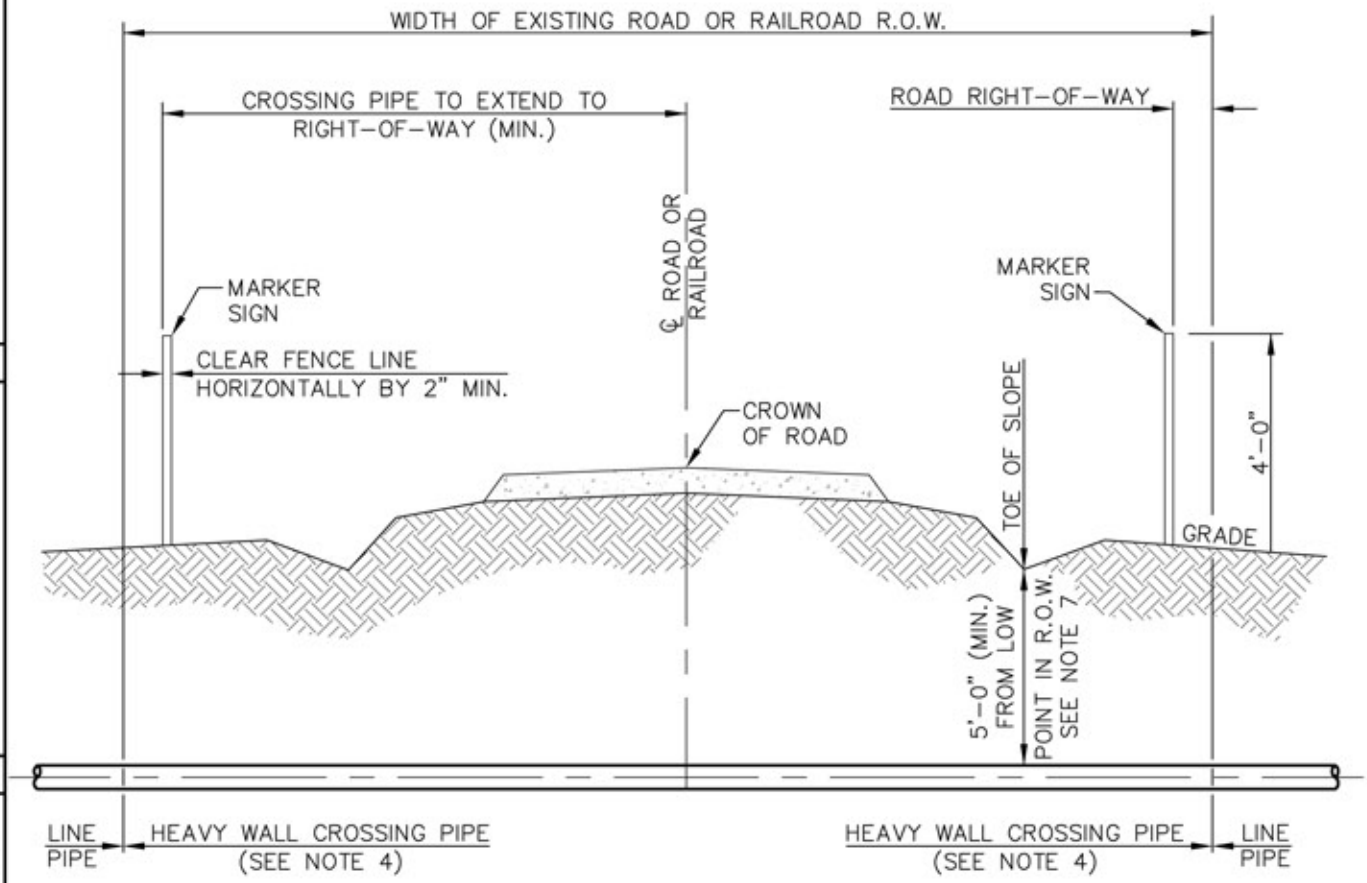

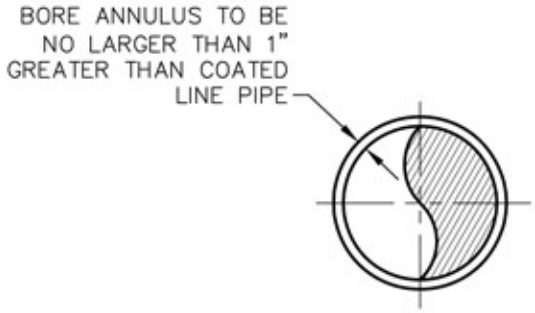

NOTES:

1. CROSSINGS SHALL BE IN ACCORDANCE WITH APPLICABLE PERMIT.
2. ROAD CROSSING PIPE SHALL EXTEND AT MINIMUM TO RIGHT-OF-WAY LINE UNLESS OTHERWISE SPECIFIED.
3. THE TYPE AND MINIMUM REQUIRED LENGTH OF PIPE FOR CROSSINGS OF ROADS SHALL BE AS SPECIFIED ON ALIGNMENT SHEETS.
4. PIPE FOR BORED CROSSINGS TO INCLUDE ABRASION-RESISTANT (ARB) COATING.
5. PIPELINE MARKER AND TEST STATIONS TO BE INSTALLED ON RIGHT-OF-WAY LINE NEXT TO FENCE IF POSSIBLE.
6. THE CROSSING PIPE SHALL BE STRAIGHT WITH NO VERTICAL OR HORIZONTAL BENDS WITHIN ROAD RIGHT-OF-WAY.
7. MINIMUM PIPELINE COVER IN DRAINAGE DITCHES AT PUBLIC ROADS IS 60 INCHES; 36 INCHES IN CONSOLIDATED ROCK.

REVISIONS
01 REVISED DIMENSION
02 2010-10-11 REVISED TITLE BLOCK

TransCanada
In business to deliver
exp Energy Services Inc.
t: +1.850.385.5441 | f: +1.850.385.5523
1300 Metropolitan Blvd
Tallahassee, FL 32308
USA
www.exp.com

DESIGNER: JMP (NAME) 2010-10-21 (DATE)	KEYSTONE XL PROJECT		
	FIA # 4359	CHAINAGE:	DISCIPLINE # 03
	TITLE: DETAIL 21 TYPICAL UNCASED ROAD/RAILROAD CROSSING BORE DETAIL		
CHECKED BY: WSF	DESIGN CHECKER: RW P7100	SCALE N.T.S.	DWG No 4359-03-ML-03-717 REV 02

TC_A4_BR.DWG 8.5X11

CADD DRAWING: DO NOT MAKE MANUAL REVISIONS

THESE ARE TYPICAL DRAWINGS; ACTUAL SITE CONDITIONS MAY VARY FROM THE SITE GRAPHICALLY REPRESENTED.

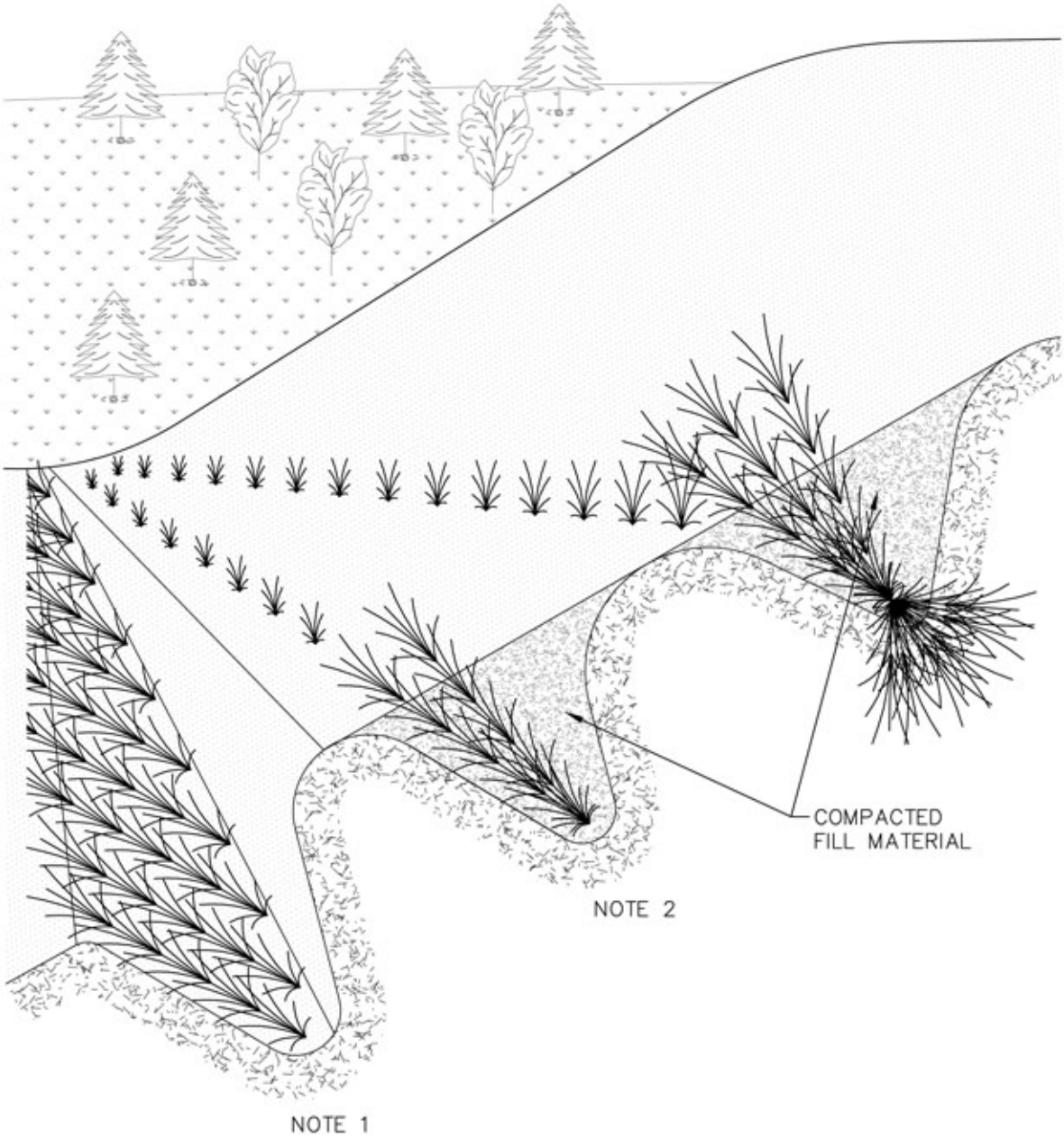

NOTES:

1. CUT TRENCH ACROSS SLOPE. FILL WITH DORMANT WOODY PLANT MATERIAL.
2. FILL IS PLACED ON TOP OF BRANCH LAYER AND COMPACTED.
3. INSTALLATION SPECIFICATIONS TO BE MODIFIED AS NECESSARY TO SUIT SITE CONDITIONS.

REVISIONS
01 2008-11-04 UPDATED DRAWING NOTES
02 2010-10-11 REVISED TITLE BLOCK

TransCanada
In business to deliver

exp Energy Services Inc.
t: +1.850.385.5441 | f: +1.850.385.5523
1300 Metropolitan Blvd
Tallahassee, FL 32308
USA
www.exp.com

DESIGNER: JMP (NAME) 2010-10-21 (DATE)

CHECKED BY: WSF

DESIGN CHECKER: RW

P7100

KEYSTONE XL PROJECT

FIA # 4359 | CHAINAGE: | DISCIPLINE # 03

TITLE
DETAIL 22
STREAMBANK RECLAMATION –
BRUSH LAYER IN CROSS CUT SLOPE

SCALE N.T.S. | DWG No 4359-03-ML-05-710 | REV 02

TC_A4_BR.DWG 8.5X11

CADD DRAWING: DO NOT MAKE MANUAL REVISIONS

THESE ARE TYPICAL DRAWINGS; ACTUAL SITE CONDITIONS MAY VARY FROM THE SITE GRAPHICALLY REPRESENTED.

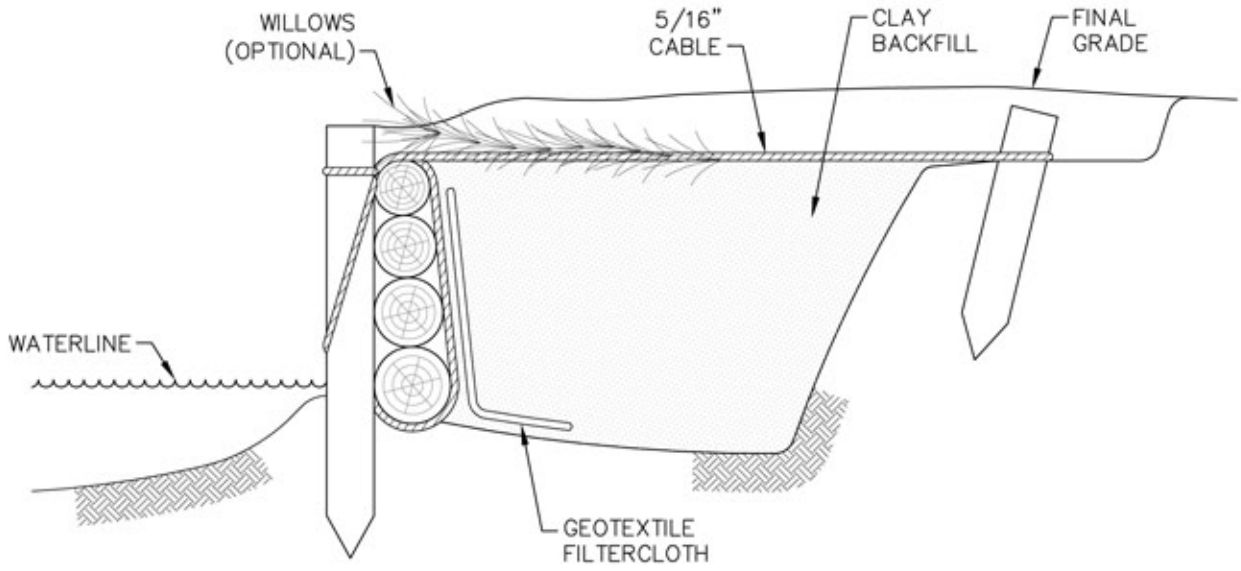

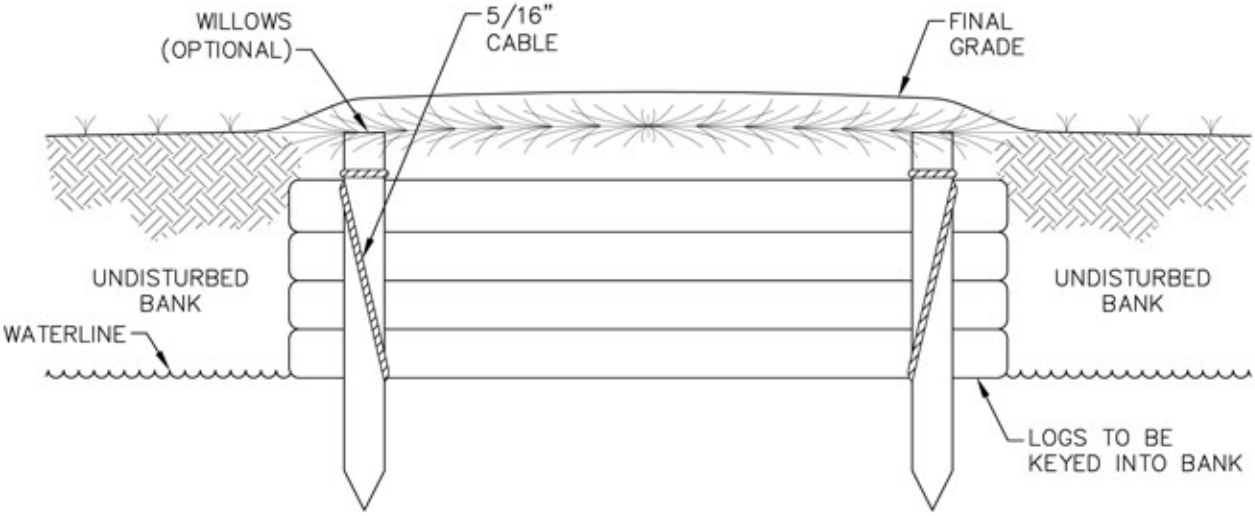

NOTES:

1. LOG WALLS TO BE CONSTRUCTED USING CONIFEROUS MATERIAL.
2. NATURE BACKFILL OR LOOSE GRADE MATERIAL SHOULD BE USED AS FILL MATERIAL.
3. ANCHOR PILINGS OR DEADMAN ANCHORS TO BE USED TO SECURE CABLE IN BANK.
4. NON-WOVEN FILTER CLOTH (NYLEX C34 OR EQUIVALENT) TO BE USED TO LINE LOG WALL.
5. INSTALLATION SPECIFICATIONS TO BE MODIFIED AS NECESSARY TO SUIT ACTUAL SITE CONDITIONS.

REVISIONS
01 2008-11-04 UPDATED DRAWING NOTES
02 2010-10-11 REVISED TITLE BLOCK

TransCanada
In business to deliver

exp Energy Services Inc.
t: +1.850.385.5441 | f: +1.850.385.5523
1300 Metropolitan Blvd
Tallahassee, FL 32308
USA
www.exp.com

DESIGNER: JMP (NAME) 2010-10-21 (DATE)	KEYSTONE XL PROJECT		
	FIA # 4359	CHAINAGE:	DISCIPLINE # 03
	TITLE: DETAIL 23 STREAMBANK RECLAMATION – LOGWALL		
CHECKED BY: WSF / DESIGN CHECKER: RW P7100	SCALE N.T.S.	DWG No 4359-03-ML-05-711	REV 02

TC_A4_BR.DWG 8.5X11

CADD DRAWING: DO NOT MAKE MANUAL REVISIONS

THESE ARE TYPICAL DRAWINGS; ACTUAL SITE CONDITIONS MAY VARY FROM THE SITE GRAPHICALLY REPRESENTED.

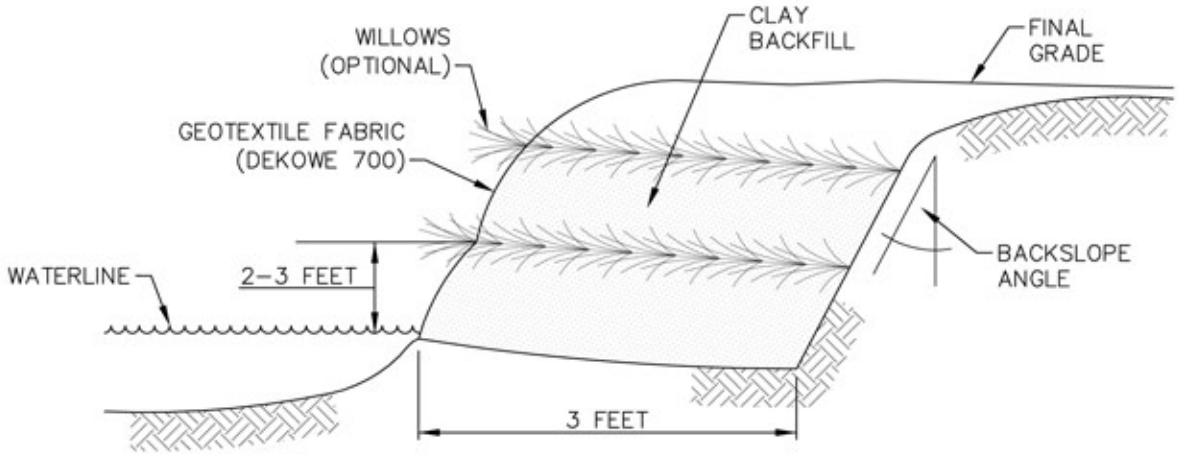

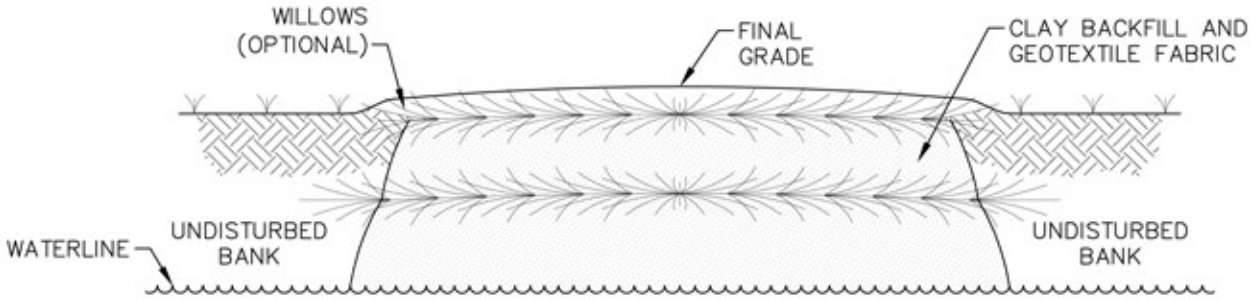

NOTES:

1. NATURE BACKFILL OR LOOSE GRADE MATERIAL SHOULD BE USED TO MINIMIZE AIR SPACES. THIS ALLOWS PROPER SOIL FABRIC CONTACT, WHICH MINIMIZES STEELING AND SCOURING DURING RUNOFF AND ENSURES SURVIVAL OF THE WILLOW CUTTINGS.
2. PLYWOOD FORMS (8'x2') MAY BE REQUIRED TO HELP RECONSTRUCT STEEP OR VERTICAL BANKS.
3. GRID LAYERS SHOULD NOT EXCEED 3 FEET IN HEIGHT WITH A MINIMUM OF 3 FEET SET IN BANK.
4. WILLOWS SHOULD BE HARVESTED AS CLOSE TO INSTALLATION AS POSSIBLE, PREFERABLY THE PREVIOUS DAY BUT NO MORE THAN 2 DAYS EARLY.
5. WILLOWS SHOULD BE 0.5 TO 1 INCH IN DIAMETER AND 2 TO 3 FEET LONG WITH NO MORE THAN 10 INCHES LEFT EXPOSED.
6. PLANTING RATE SHOULD BE APPROXIMATELY 1 STEM PER 6 INCHES.
7. INSTALLATION TO BE MODIFIED AS NECESSARY TO SUIT ACTUAL SITE CONDITIONS.

REVISIONS
01 2008-11-04 UPDATED DRAWING NOTES
02 2010-10-11 REVISED TITLE BLOCK

TransCanada
In business to deliver

exp Energy Services Inc.
t: +1.850.385.5441 | f: +1.850.385.5523
1300 Metropolitan Blvd
Tallahassee, FL 32308
USA
www.exp.com

DESIGNER:		KEYSTONE XL PROJECT		
JMP (NAME)	2010-10-21 (DATE)	FIA # 4359	CHAINAGE:	DISCIPLINE # 03
		TITLE: DETAIL 24 STREAMBANK RECLAMATION – VEGETATED GEOTEXTILE INSTALLATION		
CHECKED BY: WSF	DESIGN CHECKER: RW P7100	SCALE N.T.S.	DWG No 4359-03-ML-05-712	REV 02

TC_A4_BR.DWG 8.5X11

CADD DRAWING: DO NOT MAKE MANUAL REVISIONS

THESE ARE TYPICAL DRAWINGS; ACTUAL SITE CONDITIONS MAY VARY FROM THE SITE GRAPHICALLY REPRESENTED.

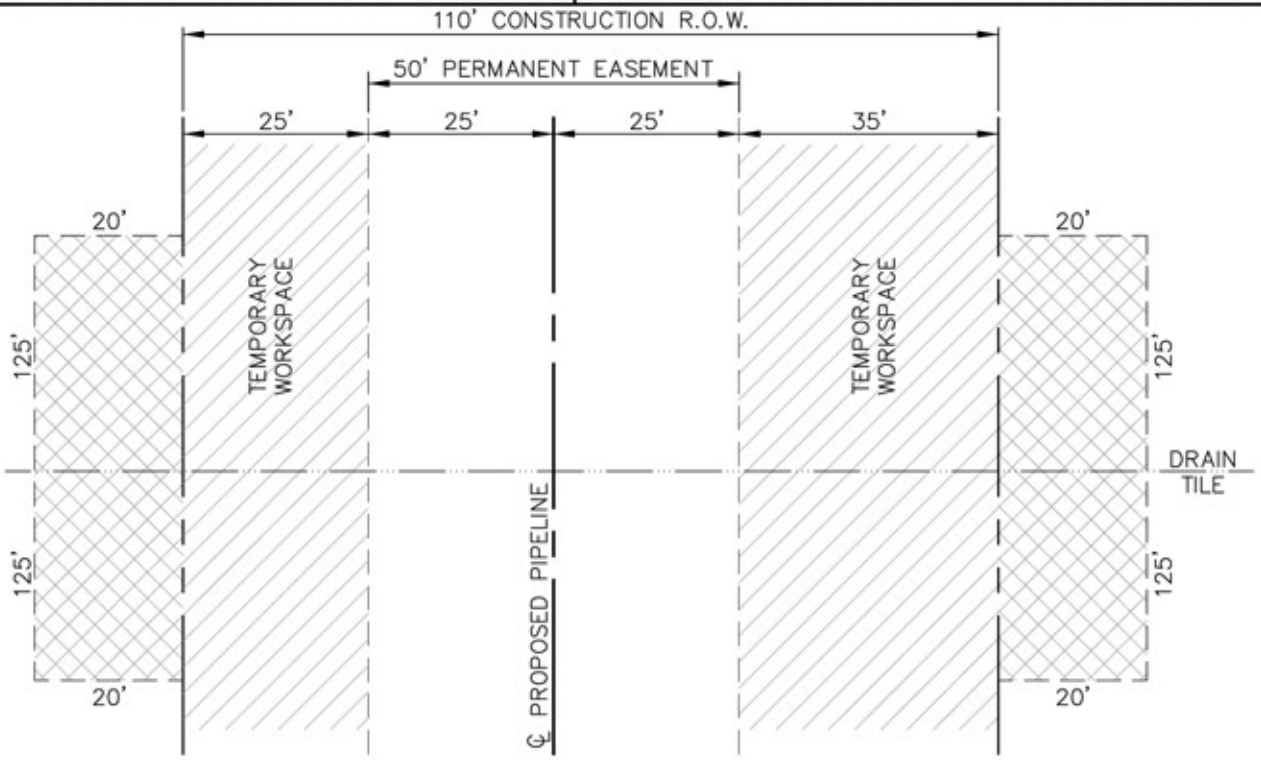

PLAN VIEW

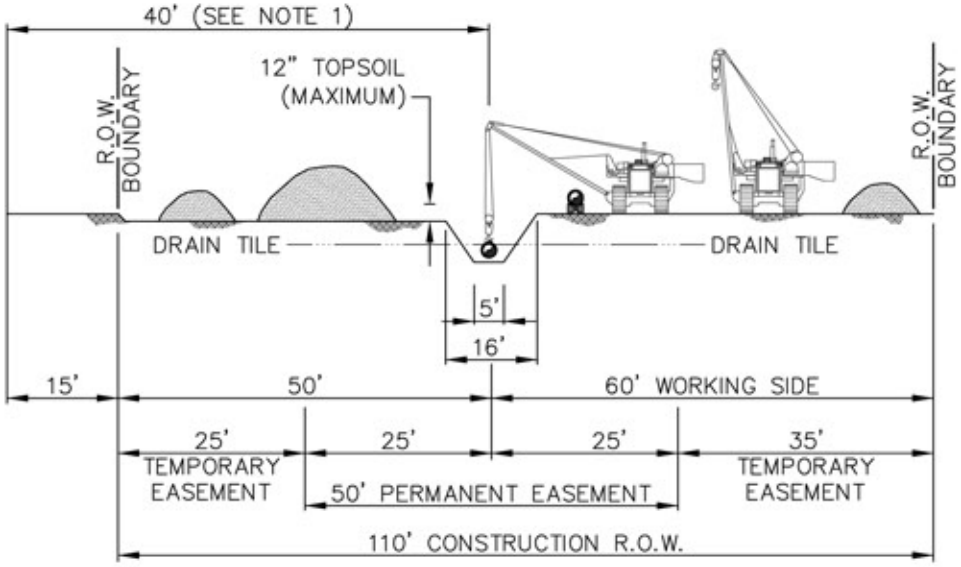

ELEVATION

NOTES:

1. THE OFFSET FROM A FOREIGN PIPELINE, WHERE APPLICABLE, WILL BE 40' FOR MOST LOCATIONS, BUT MAY BE INCREASED OR DECREASED DEPENDING ON THE SITE SPECIFIC CONSTRUCTION REQUIREMENTS.
2. THE MINIMUM CLEARANCE BETWEEN THE TOP OF PIPE AND THE BOTTOM OF DRAIN TILE WILL BE 12 INCHES.
3. INSTALLATION SPECIFICATIONS TO BE MODIFIED AS NECESSARY TO SUIT ACTUAL SITE CONDITIONS.

REVISIONS
01 REVISED NOTE 3; DELETED DIMENSION
02 2010-10-11 REVISED TITLE BLOCK

TransCanada
In business to deliver

exp Energy Services Inc.
t: +1.850.385.5441 | f: +1.850.385.5523
1300 Metropolitan Blvd
Tallahassee, FL 32308
USA
www.exp.com

DESIGNER: JMP (NAME) 2010-10-21 (DATE)	KEYSTONE XL PROJECT		
	FIA # 4359	CHAINAGE:	DISCIPLINE # 03
	TITLE: DETAIL 25 TYPICAL R.O.W. LAYOUT/SOIL HANDLING 110' CONSTRUCTION R.O.W. 50' EASEMENT DRAIN TILE CROSSING		
CHECKED BY: WSF / DESIGN CHECKER: RW P7100	SCALE N.T.S.	DWG No 4359-03-ML-03-718	REV 02

TC_A4_BR.DWG 8.5X11

CADD DRAWING: DO NOT MAKE MANUAL REVISIONS

THESE ARE TYPICAL DRAWINGS; ACTUAL SITE CONDITIONS MAY VARY FROM THE SITE GRAPHICALLY REPRESENTED.

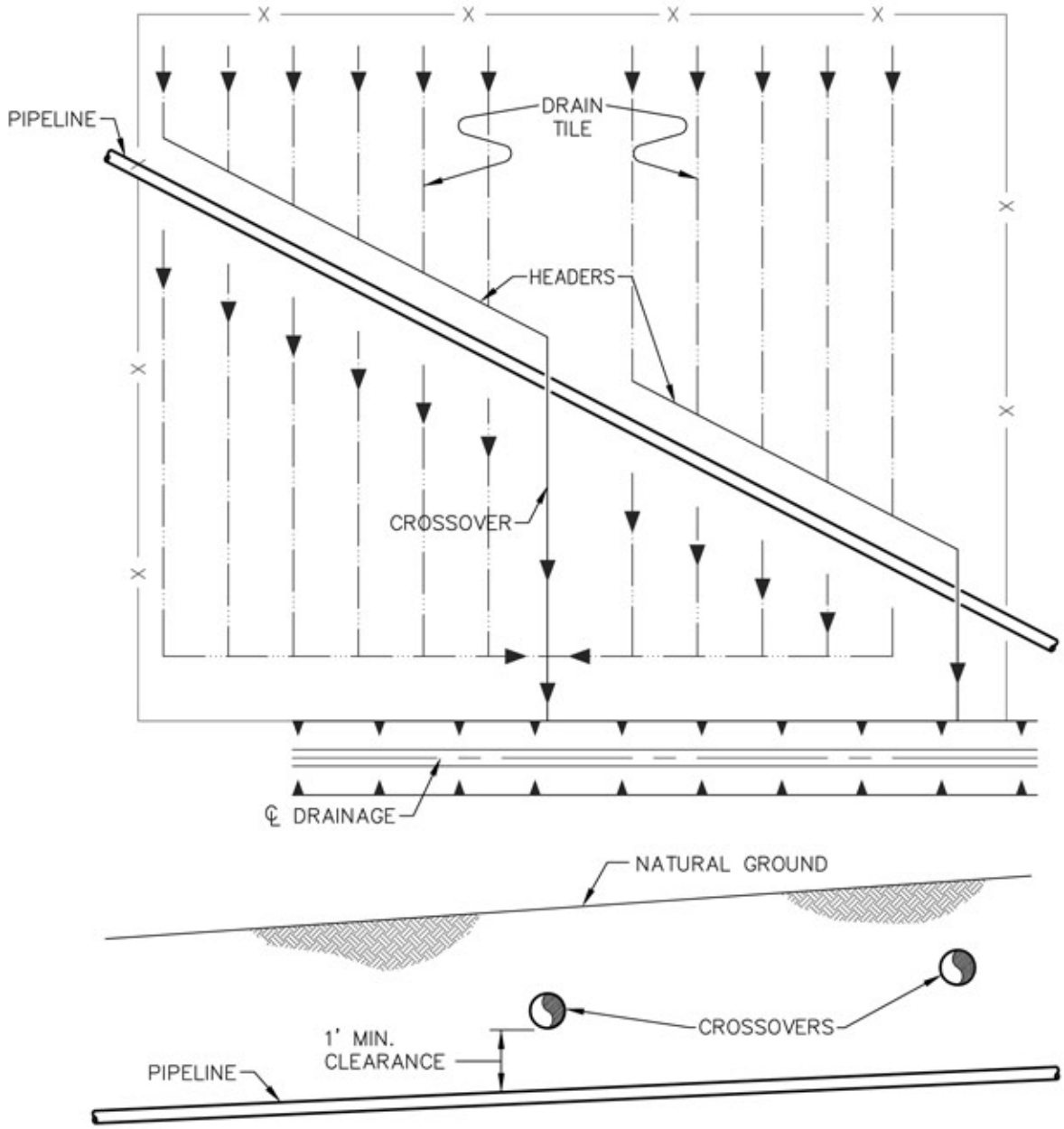

PROFILE

REVISIONS		
02	2010-10-11	REVISED TITLE BLOCK
01		ADDED DIMENSION

TransCanada
In business to deliver

exp Energy Services Inc.
t: +1.850.385.5441 | f: +1.850.385.5523
1300 Metropolitan Blvd
Tallahassee, FL 32308
USA
www.exp.com

DESIGNER: JMP (NAME) 2010-10-21 (DATE)

CHECKED BY: WSF

DESIGN CHECKER: RW P7100

KEYSTONE XL PROJECT

FIA # 4359 | CHAINAGE: | DISCIPLINE # 03

TITLE: DETAIL 26
HEADER/MAIN CROSSOVERS OF PIPELINE

SCALE N.T.S. | DWG No 4359-03-ML-03-719 | REV 02

TC_A4_BR.DWG 8.5X11

CADD DRAWING: DO NOT MAKE MANUAL REVISIONS

THESE ARE TYPICAL DRAWINGS; ACTUAL SITE CONDITIONS MAY VARY FROM THE SITE GRAPHICALLY REPRESENTED.

RELOCATE/REPLACE DRAINAGE HEADER/MAIN

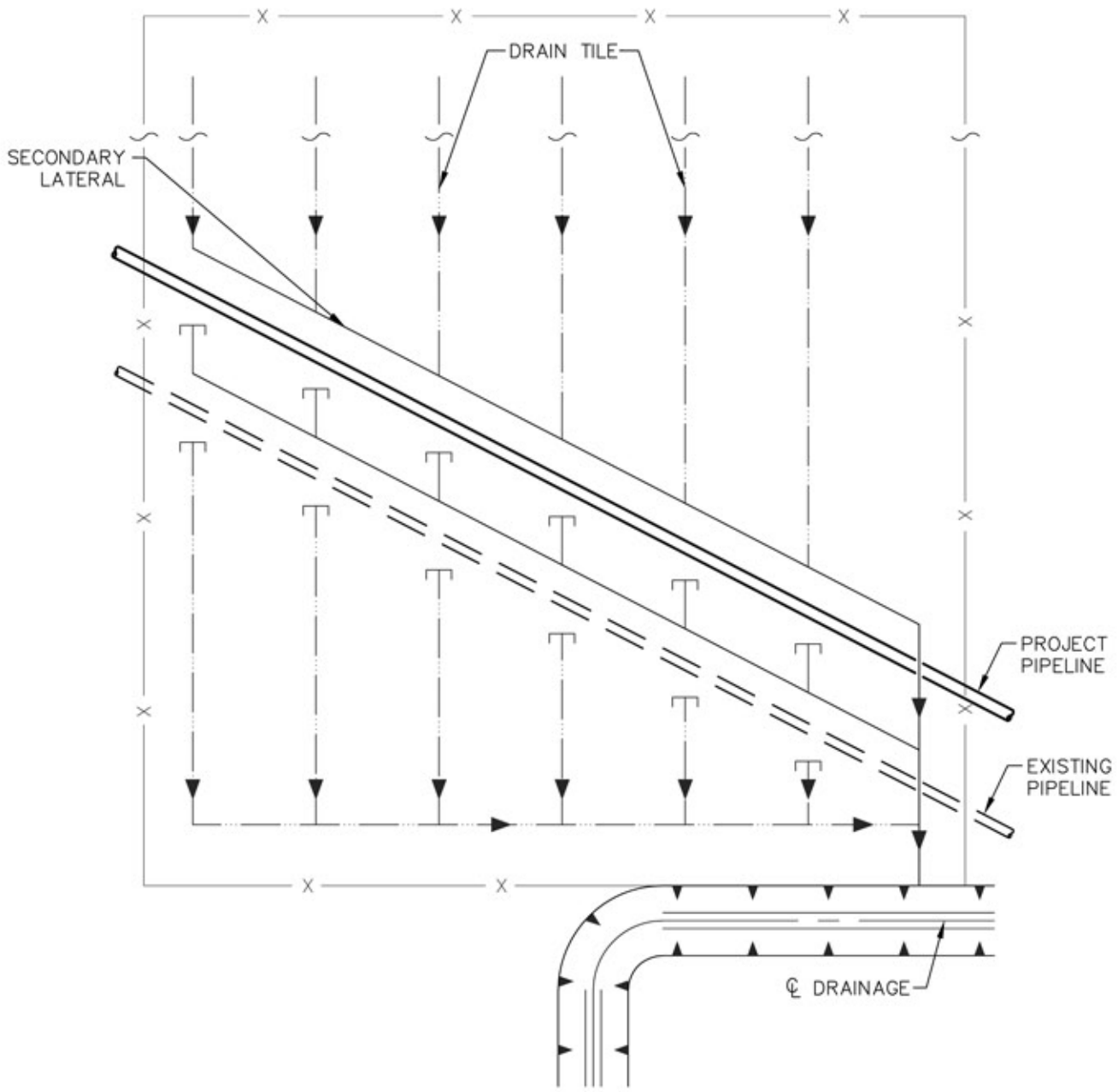

REVISIONS
01 REVISED LABELS
02 2010-10-11 REVISED TITLE BLOCK

TransCanada
In business to deliver

exp Energy Services Inc.
t: +1.850.385.5441 | f: +1.850.385.5523
1300 Metropolitan Blvd
Tallahassee, FL 32308
USA
www.exp.com

DESIGNER: JMP (NAME) 2010-10-21 (DATE)	KEYSTONE XL PROJECT		
	FIA # 4359	CHAINAGE:	DISCIPLINE # 03
	TITLE: DETAIL 27 HEADER/MAIN CROSSOVERS OF PIPELINE		
CHECKED BY: WSF	DESIGN CHECKER: RW P7100	SCALE N.T.S.	DWG No 4359-03-ML-03-720 REV 02

TC_A4_BR.DWG 8.5X11

CADD DRAWING: DO NOT MAKE MANUAL REVISIONS

THESE ARE TYPICAL DRAWINGS; ACTUAL SITE CONDITIONS MAY VARY FROM THE SITE GRAPHICALLY REPRESENTED.

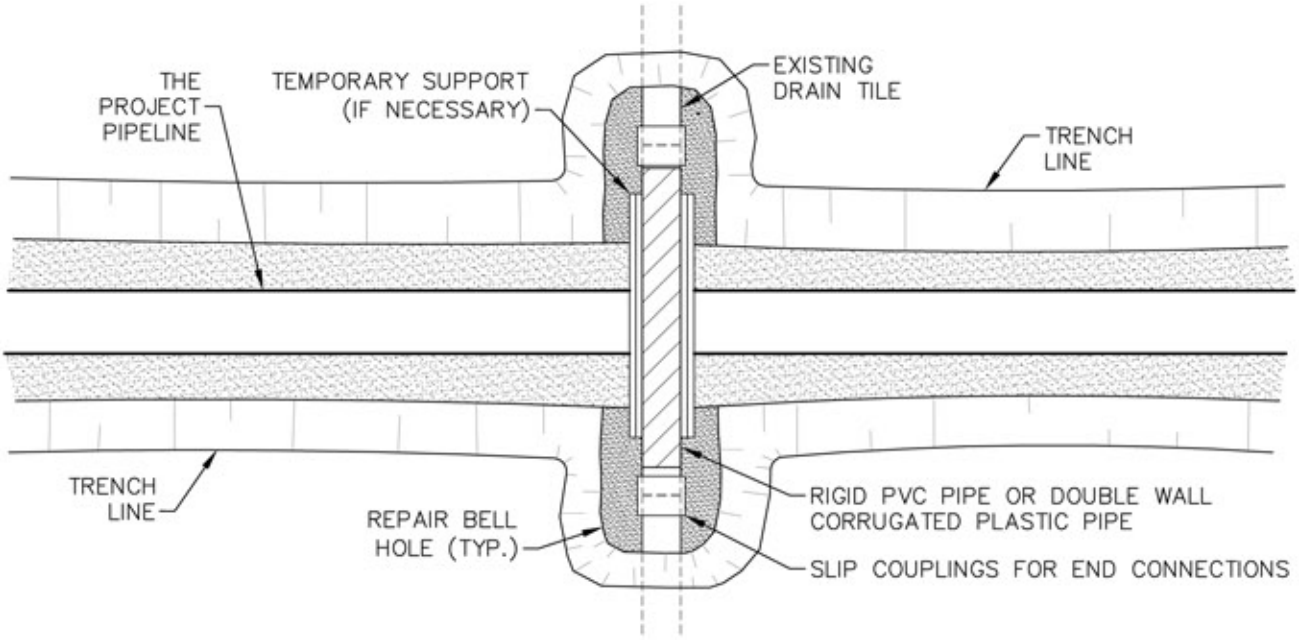

PLAN

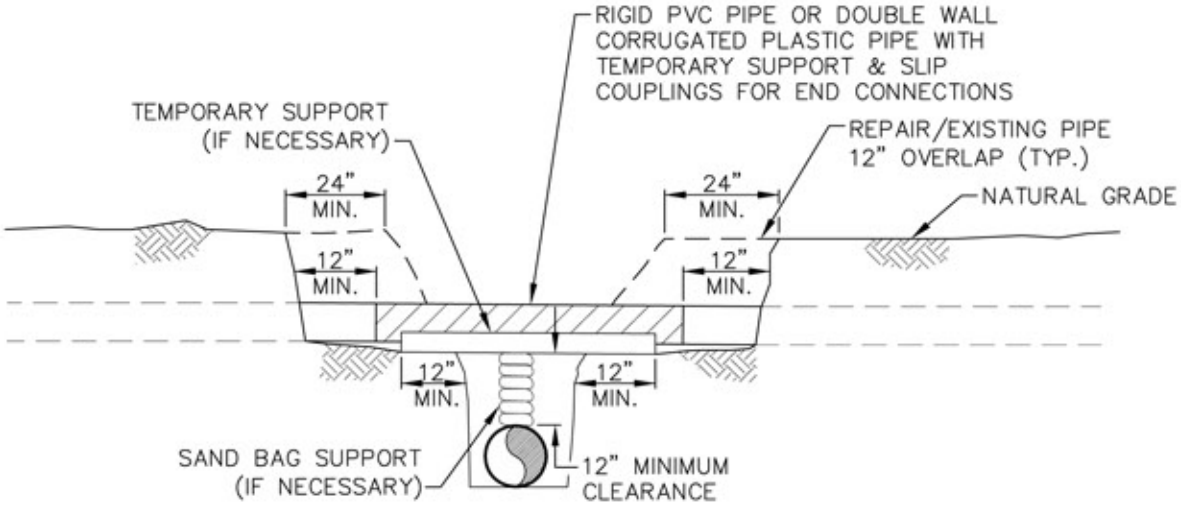

PROFILE

NOTES:

1. IMMEDIATELY REPAIR TILE IF WATER IS FLOWING THROUGH TILE AT TIME OF TRENCHING.
2. SCREEN ALL EXPOSED ENDS OF TILE LINES.

REVISIONS
01 2008-11-04 UPDATED DRAWING NOTES
02 2010-10-11 REVISED TITLE BLOCK

TransCanada
In business to deliver

exp Energy Services Inc.
t: +1.850.385.5441 | f: +1.850.385.5523
1300 Metropolitan Blvd
Tallahassee, FL 32308
USA
www.exp.com

DESIGNER: JMP (NAME) 2010-10-21 (DATE)

CHECKED BY: WSF
DESIGN CHECKER: RW P7100

KEYSTONE XL PROJECT

FIA # 4359 | CHAINAGE: | DISCIPLINE # 03

TITLE
DETAIL 28
DRAINAGE AND IRRIGATION
TEMPORARY DRAIN TILE REPAIR

SCALE N.T.S. | DWG No 4359-03-ML-03-721 | REV 02

TC_A4_BR.DWG 8.5X11

CADD DRAWING: DO NOT MAKE MANUAL REVISIONS

THESE ARE TYPICAL DRAWINGS; ACTUAL SITE CONDITIONS MAY VARY FROM THE SITE GRAPHICALLY REPRESENTED.

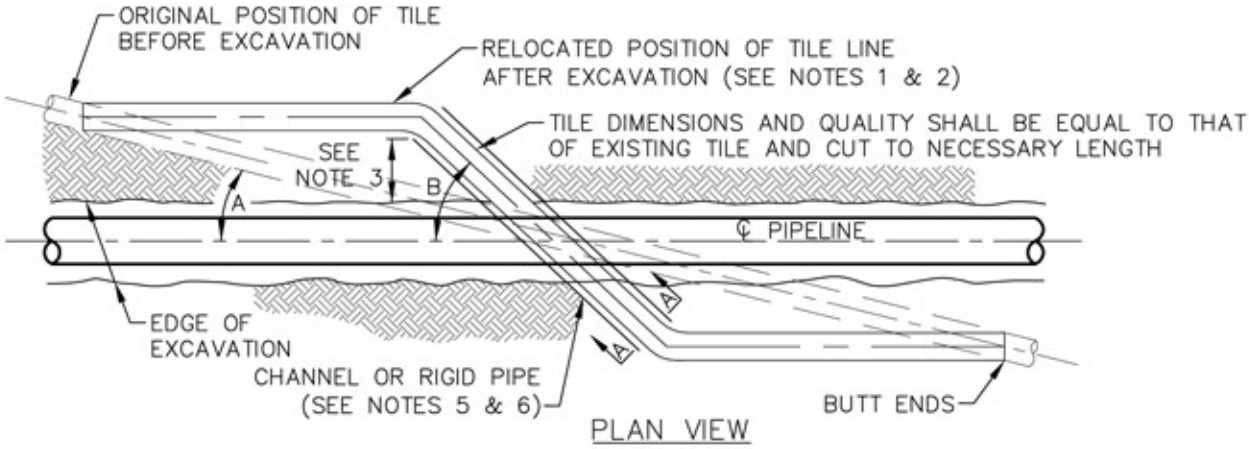

PLAN VIEW

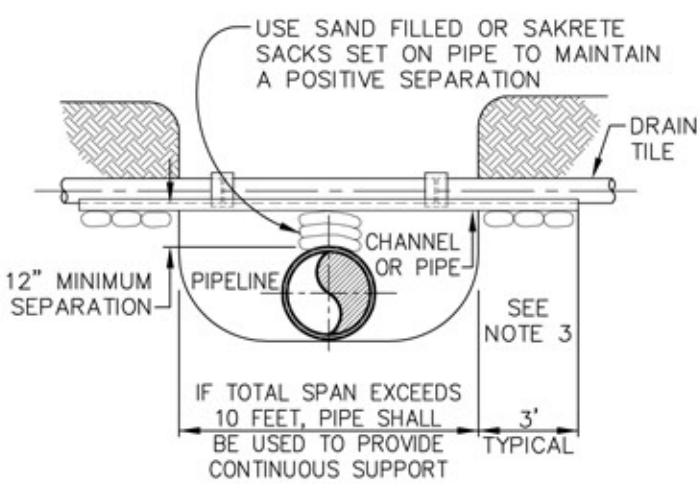

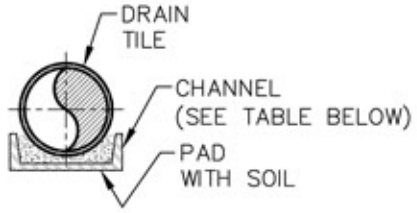

SECTION "A–A" CHANNEL (SPANS < 10 FEET)

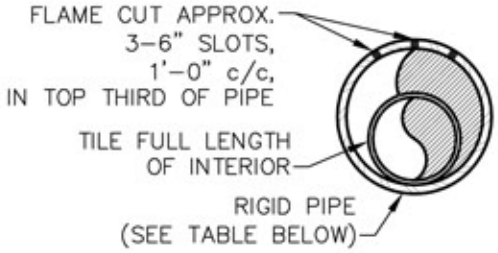

END VIEWS

SECTION "A–A" RIGID PIPE (SPANS > 10 FEET)

NOTES:

1. TILE REPAIR SHALL MAINTAIN ORIGINAL ALIGNMENT AND GRADIENT WHEN ANGLE "A", BETWEEN PIPELINE AND ORIGINAL TILE, IS MORE THAN 20 FEET UNLESS OTHERWISE DIRECTED BY THE PROJECT REPRESENTATIVE.
2. WHEN ANGLE "A" IS LESS THAN 20 FEET, UNLESS OTHERWISE DIRECTED BY COMPANY, ANGLE "B" SHALL BE 45° FOR USUAL WIDTHS OF TRENCH. FOR EXTRA WIDTHS, IT MAY BE GREATER AS DIRECTED BY THE PROJECT REPRESENTATIVE.
3. 3 FOOT MINIMUM LENGTH OF CHANNEL OR RIGID PIPE SHALL BE SUPPORTED BY UNDISTURBED SOIL, OR IF CROSSING IS NOT AT RIGHT ANGLES TO GAS PIPELINE, EQUIVALENT LENGTH PERPENDICULAR TO TRENCH. SHIM WITH SAKRETE, SAND BAGS OR CONCRETE BLOCKS TO UNDISTURBED SOIL FOR SUPPORT AND DRAINAGE GRADIENT MAINTENANCE (TYPICAL BOTH SIDES).
4. DRAINAGE TILE SHALL BE REPLACED SO THAT ITS FORMER GRADIENT AND ALIGNMENT ARE RESTORED.
5. DIAMETER OF RIGID PIPE SHALL BE OF ADEQUATE SIZE TO ALLOW FOR THE INSTALLATION OF THE TILE FOR THE FULL LENGTH OF THE RIGID PIPE.
6. OTHER METHODS OF SUPPORTING DRAIN TILE MAY BE USED IF THE ALTERNATE PROPOSED IS EQUIVALENT IN STRENGTH TO THE CHANNEL/PIPE SECTIONS SHOWN AND IF APPROVED BY THE PROJECT REPRESENTATIVE IN ADVANCE. SITE SPECIFIC ALTERNATE SUPPORT SYSTEM TO BE DEVELOPED BY THE PROJECT REPRESENTATIVE AND FURNISHED TO CONTRACTOR FOR SPANS IN EXCESS OF 20 FEET, TILE GREATER THAN 10 INCHES DIAMETER, AND FOR HEADER SYSTEMS.
7. ALL MATERIAL TO BE FURNISHED BY CONTRACTOR.
8. PRIOR TO REPAIRING TILE, CONTRACTOR SHALL PROBE INTO THE EXISTING TILE TO THE FULL WIDTH OF THE RIGHT–OF–WAY TO DETERMINE IF ADDITIONAL DAMAGE HAS OCCURRED. ALL DAMAGED/DISTURBED TILE SHALL BE REPAIRED AS NEAR AS PRACTICABLE TO ITS ORIGINAL OR BETTER CONDITION.
9. "NIGHT CAP" OPEN ENDS OF PIPE AND/OR DRAIN TILES IF REPAIRS ARE NOT COMPLETED BY END OF WORK DAY.

MINIMUM SUPPORT TABLE

TILE SIZE	CHANNEL SIZE	PIPE SIZE
3"	4" @ 5.4 #/FT.	4" STD. WT
4"–5"	5" @ 6.7 #/FT.	6" STD. WT
6"–9"	7" @ 9.8 #/FT.	8"–10" STD. WT
10"	10" @ 15.3 #/FT.	12" STD. WT

REVISIONS
01 2008–11–04 UPDATED DRAWING NOTES
02 2010–10–11 REVISED TITLE BLOCK

TransCanada
In business to deliver

exp Energy Services Inc.
t: +1.850.385.5441 | f: +1.850.385.5523
1300 Metropolitan Blvd
Tallahassee, FL 32308
USA
www.exp.com

DESIGNER: JMP (NAME) 2010–10–21 (DATE)

CHECKED BY: WSF

DESIGN CHECKER: RW P7100

KEYSTONE XL PROJECT

FIA # 4359 | CHAINAGE: | DISCIPLINE # 03

TITLE: DETAIL 29 DRAINAGE AND IRRIGATION PERMANENT DRAIN TILE REPAIR

SCALE: N.T.S. | DWG No 4359–03–ML–03–722 | REV 02

TC_A4_BR.DWG 8.5X11

CADD DRAWING: DO NOT MAKE MANUAL REVISIONS

THESE ARE TYPICAL DRAWINGS; ACTUAL SITE CONDITIONS MAY VARY FROM THE SITE GRAPHICALLY REPRESENTED.

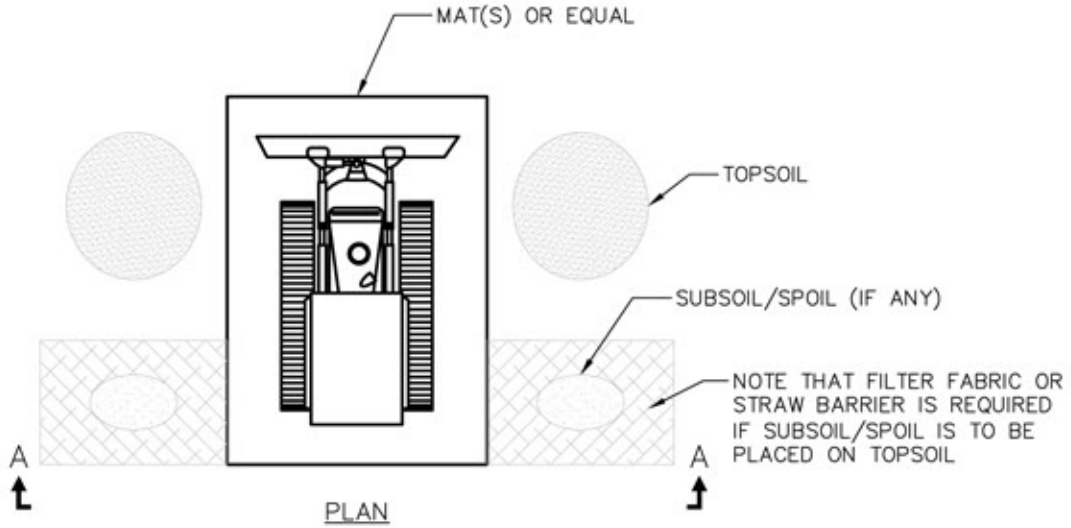

PLAN

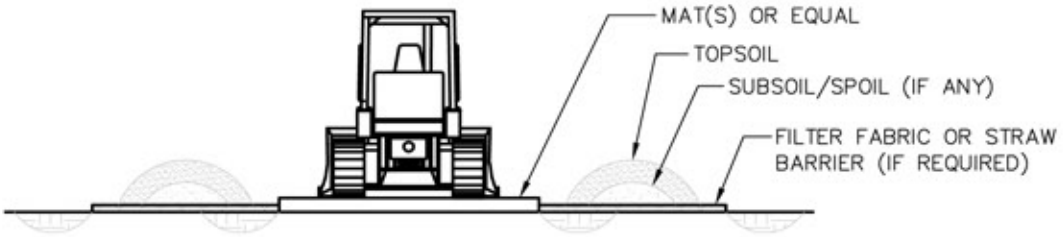

SECTION A–A

CLEANING STATION NOTES:

1. ALL EQUIPMENT WILL BE REQUIRED TO BE CLEANED AT EQUIPMENT CLEANING STATIONS LOCATED AS SHOWN ON THE CONSTRUCTION DRAWINGS OR AS DIRECTED BY THE ENVIRONMENTAL INSPECTOR.
2. STOCKPILE TOPSOIL/SUBSOIL AS SHOWN OR IN ANY CONFIGURATION APPROVED BY THE ENVIRONMENTAL INSPECTOR.
3. SHOVELS OR OTHER HAND TOOLS AND/OR COMPRESSED AIR WILL BE USED TO REMOVE AS MUCH AS MUCH SOIL AS PRACTICAL FROM TRACKED EQUIPMENT. EFFORT WILL BE FOCUSED ON TRACKS AND BLADES.
4. IF CONDITIONS ARE MUDDY, WHEELED EQUIPMENT WILL ALSO BE CLEANED USING HAND TOOLS TO REMOVE EXCESS SOIL FROM TIRES AND WHEEL WELLS.
5. CLEANING WILL BE CONDUCTED ON CONSTRUCTION MATS OR OTHER RAISED SURFACE TO MINIMIZE REATTACHMENT OF SOIL THAT HAS BEEN PREVIOUSLY REMOVED.
6. MATS WILL BE CLEANED BETWEEN EACH PIECE OF EQUIPMENT.
7. SOIL COLLECTED DURING THE CLEANING PROCESS WILL BE STOCKPILED AT A CONVENIENT LOCATION NEAR THE CLEANING STATION AND DISPOSED OF IN AN ACCEPTABLE LAND FILL.
8. IF THE SOIL HAS A SIGNIFICANT COMPONENT OF SUBSOIL, IT WILL BE PLACED OVER THE BACKFILLED TRENCH OR IN THE ADJACENT SPOIL STORAGE AREA, AND SUBSEQUENTLY COVERED WITH TOPSOIL. IF THE LAND OWNER DIES NOT APPROVE OF ON–SITE DISPOSAL, THE SOIL WILL BE TAKEN TO AN APPROVED DISPOSAL SITE.
9. SOILS CONTAMINATED WITH OIL OR GREASE WILL BE REMOVED AND DISPOSED OF IN ACCORDANCE PROJECT SPCCC PLAN.

REVISIONS
01 REVISED LABELS
02 2010–10–11 REVISED TITLE BLOCK

TransCanada
In business to deliver
exp Energy Services Inc.
t: +1.850.385.5441 | f: +1.850.385.5523
1300 Metropolitan Blvd
Tallahassee, FL 32308
USA
www.exp.com

DESIGNER: JMP (NAME) 2010–10–21 (DATE)	KEYSTONE XL PROJECT		
	FIA # 4359	CHAINAGE:	DISCIPLINE # 03
	TITLE: DETAIL 30 EQUIPMENT CLEANING STATION DETAIL		
CHECKED BY: WSF	DESIGN CHECKER: RW P7100	SCALE N.T.S.	DWG No 4359–03–ML–05–713 REV 02

TC_A4_BR.DWG 8.5X11

CADD DRAWING: DO NOT MAKE MANUAL REVISIONS

THESE ARE TYPICAL DRAWINGS; ACTUAL SITE CONDITIONS MAY VARY FROM THE SITE GRAPHICALLY REPRESENTED.

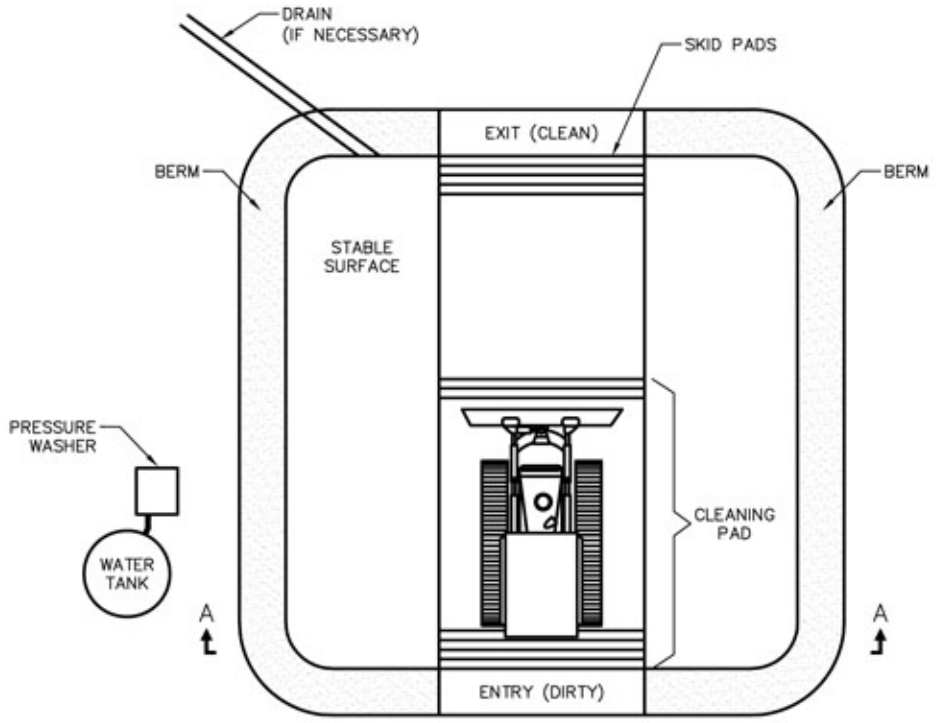

PLAN

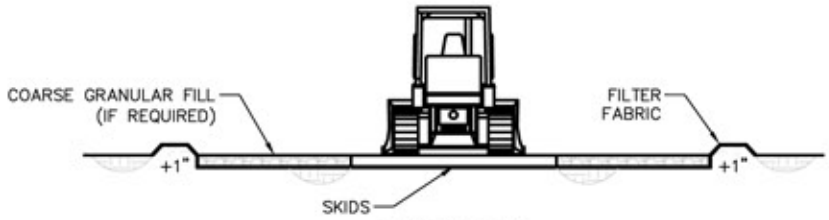

SECTION A–A

WASH STATION NOTES:

1. ALL EQUIPMENT AND VEHICLES ARE REQUIRED TO BE CLEANED AT WASH STATION LOCATIONS SHOWN ON THE CONSTRUCTION DRAWINGS OR AS DIRECTED BY THE ENVIRONMENTAL INSPECTOR. WASH STATIONS WILL BE CONSTRUCTED BY THE CONTRACTOR. WASHINGS WILL BE CARRIED OUT UNDER THE SUPERVISION AND TO SATISFACTION OF THE ENVIRONMENTAL INSPECTOR.
2. WASH WATER USED FOR CLEANING WILL NOT BE ALLOWED TO ENTER ANY WATERBODY, WETLAND, OR IRRIGATION CANAL/DITCH. ANY SOILS CONTAMINATED BY PETROLEUM–BASED, OR OTHER UNDESIRABLE MATERIALS FROM WASH STATIONS WILL BE REMOVED.
3. THE SIZE OF STATION WILL BE ADEQUATE TO ACCOMMODATE THE MAXIMUM SIZE OF EQUIPMENT EXPECTED.
4. EQUIPMENT WILL CONSISTENTLY ENTER THE "DIRTY END" AND EXIT THE "CLEAN END."
5. STABLE DRAINAGE FROM THE SITE WILL BE PROVIDED (IF NECESSARY). NO DISCHARGE TO STREAMS OR WETLANDS WILL BE ALLOWED.
6. WASH STATIONS WILL BE EQUIPPED WITH SKID PADS OR WASH RACKS TO PREVENT SOIL FROM BEING CARRIED ON TRACKS OR TIRES AS EQUIPMENT AND VEHICLES EXIT THE WASH STATION. SKIDS ARE TO BE CLEANED EACH TIME A PIECE OF EQUIPMENT IS CLEANED.
7. GRAVEL FILL (IF REQUIRED) AND FILTER FABRIC WILL BE REMOVED AND DISPOSED OF IN AN ACCEPTABLE LAND FILL.
8. THE DEPRESSION WILL BE BACKFILLED WITH BERMED MATERIAL.
9. CLEANING SITES WILL BE MONITORED DURING THE POST CONSTRUCTION MONITORING PROGRAM AND WEEDS WILL BE CONTROLLED PER THE NOXIOUS WEED MANAGEMENT PLAN.

REVISIONS | 01 REVISED LABELS | 02 2010–10–11 REVISED TITLE BLOCK

TransCanada
In business to deliver

exp Energy Services Inc.
t: +1.850.385.5441 | f: +1.850.385.5523
1300 Metropolitan Blvd
Tallahassee, FL 32308
USA
www.exp.com

DESIGNER: JMP (NAME) 2010–10–21 (DATE)	KEYSTONE XL PROJECT		
	FIA # 4359	CHAINAGE:	DISCIPLINE # 03
	TITLE: DETAIL 31 EQUIPMENT WASH STATION DETAIL		
CHECKED BY: WSF	DESIGN CHECKER: RW P7100	SCALE N.T.S.	DWG No 4359–03–ML–05–714 REV 02

TC_A4_BR.DWG 8.5X11

CADD DRAWING: DO NOT MAKE MANUAL REVISIONS

THESE ARE TYPICAL DRAWINGS; ACTUAL SITE CONDITIONS MAY VARY FROM THE SITE GRAPHICALLY REPRESENTED.

1. POTENTIAL LOCATIONS WHERE TRIPLE DITCH TOPSOIL CONSERVATION MAY BE COMPLETED ARE SHOWN ON THE ALIGNMENT SHEETS. KEYSTONE WILL DIRECT THE ACTUAL LOCATIONS WHERE TRIPLE DITCH WILL BE COMPLETED DURING, OR IMMEDIATELY PRIOR TO, TOPSOILING THE ROW. KEYSTONE MAY MODIFY TRIPLE DITCH PROCEDURES FROM THOSE DESCRIBED HERE TO ADDRESS SITE-SPECIFIC, OR SOIL-SPECIFIC, CONDITIONS.

2. STRIP TOPSOIL ("A" HORIZON) ACCORDING TO THE "A" HORIZON DEPTHS AND CONSTRUCTION DETAILS SHOWN ON CONSTRUCTION ALIGNMENT SHEETS. PLACE "A" HORIZON IN THE ADDITIONAL TEMPORARY WORKSPACE OR THE WINDROW WITHIN THE WORKING SIDE OF THE CONSTRUCTION RIGHT-OF-WAY. IN AREAS OF THICKER "A" HORIZON'S, "A" HORIZON MAY BE SPLIT TO BOTH SIDES OF THE RIGHT-OF-WAY.
REMOVE "B" HORIZON (2ND DITCH) TO DEPTHS SPECIFIED BY KEYSTONE AND STOCKPILE ON SPOIL SIDE. THE "B" HORIZON SHOULD BE REMOVED IN A STRIP AT LEAST 20 FEET WIDE OVER THE TRENCH TO ALLOW FOR STORAGE OF THE TRENCH SPOIL MATERIALS. MAINTAIN A MINIMUM OF 2 FEET BETWEEN "A" HORIZON AND "B" HORIZON STOCKPILES.

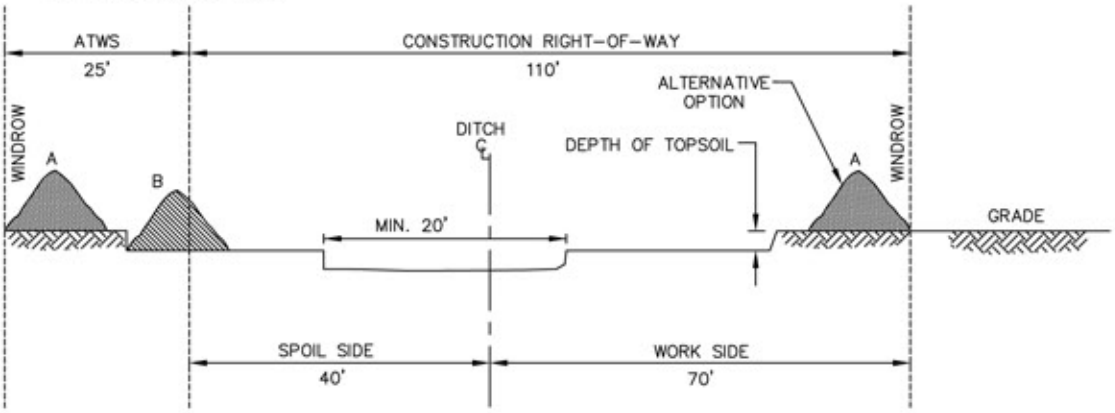

3. EXCAVATE TRENCH. ENSURE THE DIFFERENT SOIL HORIZONS ("B" HORIZON AND "C" HORIZON) ARE IN SEPARATE STOCKPILES. THE VISUAL DISTINCTION OF EACH PILE MUST BE POSSIBLE AT ALL TIMES. THE STOCKPILING SHALL ALLOW FOR RE-PLACEMENT OF THE SOIL HORIZONS BACK TO THEIR ORIGINAL SEQUENCE WITHOUT LOSS OF SOIL. MAINTAIN A MINIMUM OF 2 FEET BETWEEN "B" HORIZON AND "C" HORIZON STOCKPILES.

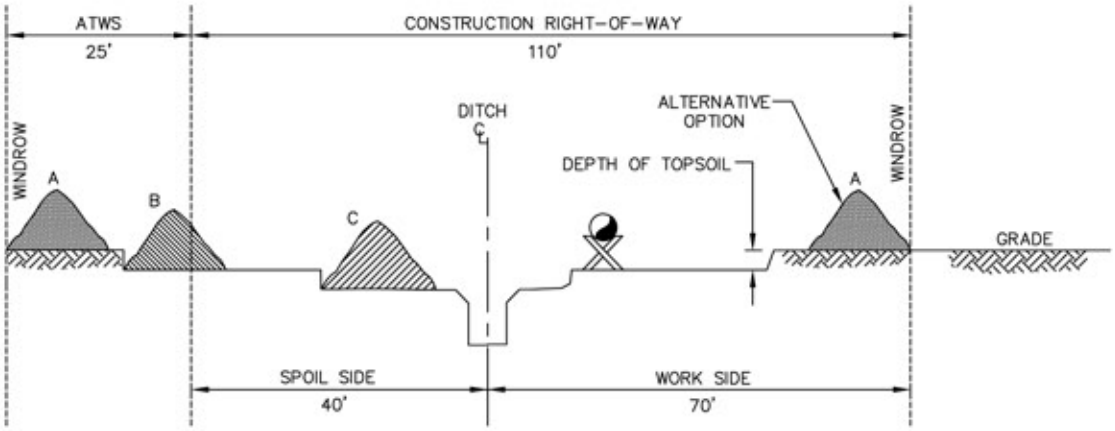

REVISIONS | 01 REVISED LABELS | 02 2010-10-08 REVISED DETAIL | 03 2010-10-11 REVISED TITLE BLOCK

TransCanada
In business to deliver

exp Energy Services Inc.
t: +1.850.385.5441 | f: +1.850.385.5523
1300 Metropolitan Blvd
Tallahassee, FL 32308
USA
www.exp.com

DESIGNER:		KEYSTONE XL PROJECT		
JMP (NAME)	2010-10-21 (DATE)	FIA # 4359	CHAINAGE:	DISCIPLINE # 03
		TITLE: DETAIL 67 TOPSOIL CONSERVATION DITCH & SPOIL STRIPPING TRIPLE DITCH		
CHECKED BY: WSF	DESIGN CHECKER: RW P7100	SCALE N.T.S.	DWG No 4359-03-ML-05-724	REV 03

TC_A4_BR.DWG 8.5X11

CADD DRAWING: DO NOT MAKE MANUAL REVISIONS

THESE ARE TYPICAL DRAWINGS; ACTUAL SITE CONDITIONS MAY VARY FROM THE SITE GRAPHICALLY REPRESENTED.

4. BACKFILL TRENCH AND COMPACT AS PER APPROVED PROCEDURE.. PLACE THE SOIL HORIZONS BACK IN THEIR ORIGINAL SEQUENCE IN THE TRENCH.

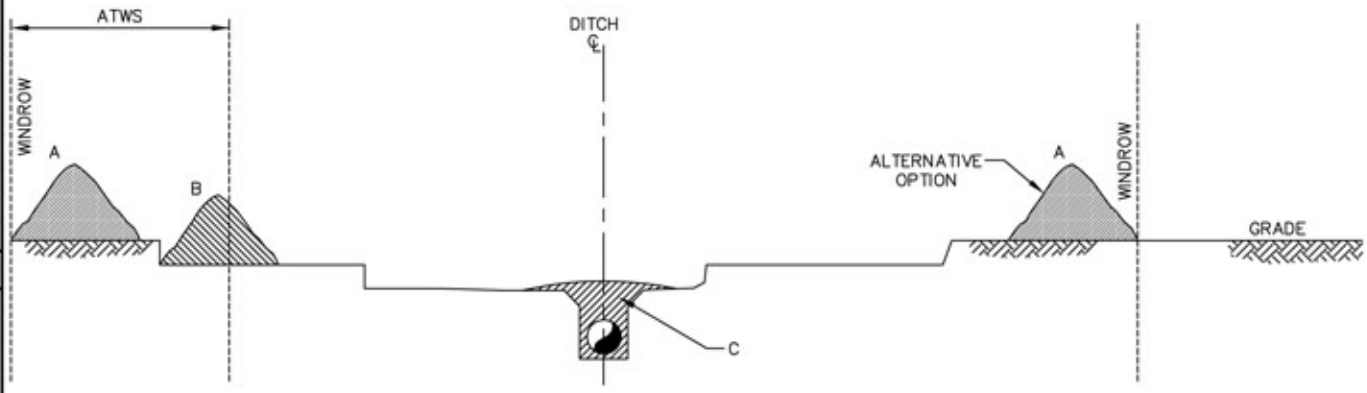

5. RELIEVE AREAS OF COMPACTION AND FEATHER (B) MATERIAL EVENLY OVER STRIPPED AREA.

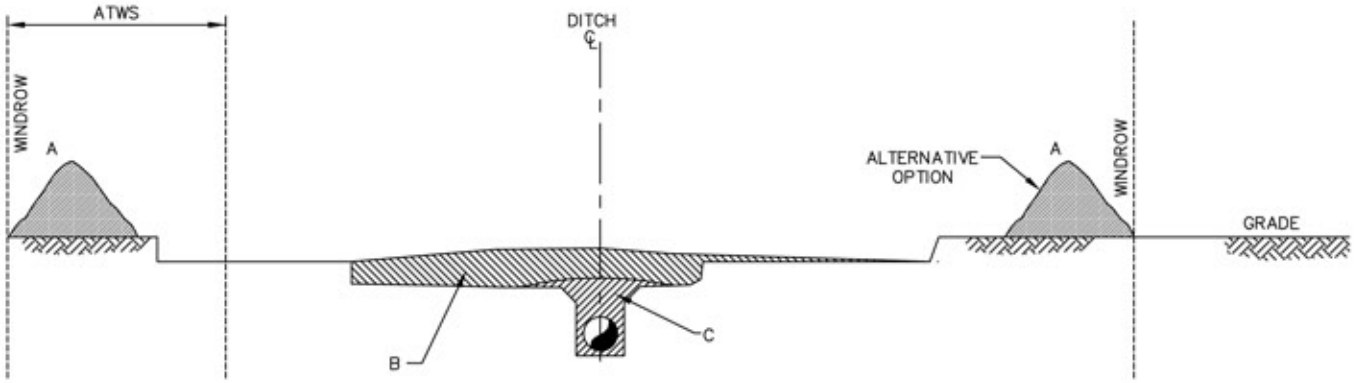

6. REPLACE "A" HORIZON PILE EVENLY OVER STRIPPED AREA.

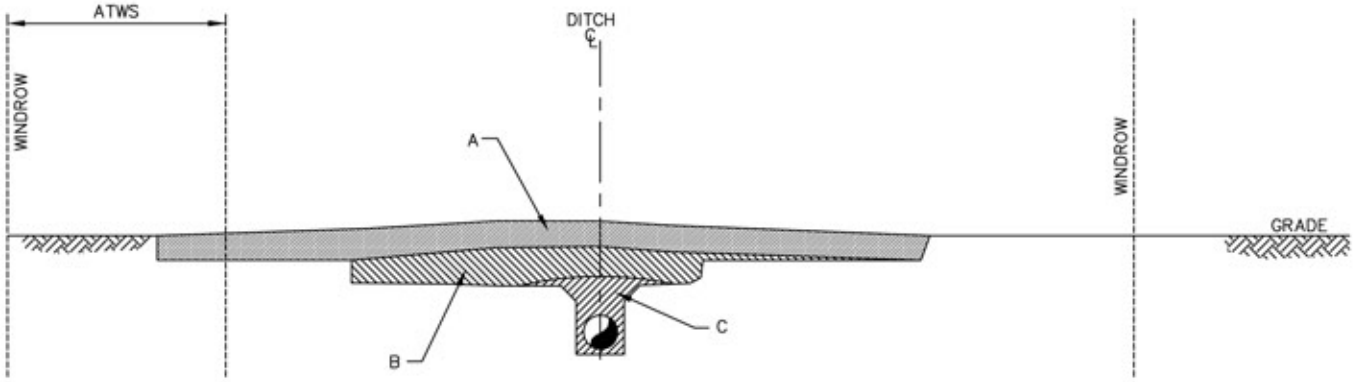

REVISIONS		
01	REVISED LABELS	
02	2010-10-08 REVISED DETAIL	
03	2010-10-11 REVISED TITLE BLOCK	

TransCanada
In business to deliver

exp Energy Services Inc.
t: +1.850.385.5441 | f: +1.850.385.5523
1300 Metropolitan Blvd
Tallahassee, FL 32308
USA
www.exp.com

DESIGNER: JMP (NAME) 2010-10-21 (DATE)

CHECKED BY: WSF

DESIGN CHECKER: RW P7100

KEYSTONE XL PROJECT

FIA # 4359 | CHAINAGE: | DISCIPLINE # 03

TITLE: DETAIL 67A
TOPSOIL CONSERVATION DITCH & SPOIL STRIPPING TRIPLE DITCH

SCALE: N.T.S. | DWG No: 4359-03-ML-05-725 | REV: 03

TC_A4_BR.DWG 8.5X11

CADD DRAWING: DO NOT MAKE MANUAL REVISIONS

-This page intentionally left blank-