SUTTER & BUTTE COUNTIES, CA

SUTTER BASIN PILOT FEASIBILITY STUDY

DRAFT REPORT

ALTERNATIVE SB-7 STATION 180+00 TO STATION 1483+33
ALTERNATIVE SB-8 STATION 1483+83 TO STATION 2368+00

LOCATION MAP
NTS

NOT FOR CONSTRUCTION

US Army Corps of Engineers
Sacramento District

Symbol	Description
DA	DESCRIPTION8
DA	DESCRIPTION7
DA	DESCRIPTION6
DA	DESCRIPTION5
DA	DESCRIPTION4
DA	DESCRIPTION3
DA	DESCRIPTION2
DA	DESCRIPTION1

Date	Approved
DATE8	APPROVAL8
DATE7	APPROVAL7
DATE6	APPROVAL6
DATE5	APPROVAL5
DATE4	APPROVAL4
DATE3	APPROVAL3
DATE2	APPROVAL2
DATE1	APPROVAL1

Designed by: –
Dwn by: –
Spec No.: –
Date: –
Rev. –
Design file no: –
Reviewed by: –
Drawing Code: –
Submitted by: –
File name:
Plot date: $$$$date$$$$
Plot scale: –
CHIEF, CIV ENGR DES SEC A

DEPARTMENT OF THE ARMY
CORPS OF ENGINEERS
SACRAMENTO, CALIFORNIA

SACRAMENTO DISTRICT
IN-HOUSE DESIGN
1325 "J" STREET
SACRAMENTO, CA 95814-2922

SUTTER & BUTTE COUNTY CALIFORNIA
SUTTER BASIN PILOT FEASIBILITY STUDY
DRAFT REPORT
ALTERNATIVE SB-7 AND SB-8
COVER SHEET

Sheet reference number:
G-1

DWG NO.	SHT NO.	DESCRIPTION
		GENERAL
G-1	1	TITLE SHEET AND LOCATION MAP
G-2	2	SHEET INDEX
G-3	3	BASIN MAP
G-4	4	VICINITY MAP
G-5	5	PROJECT FEATURES, BORROW SITES AND HAUL ROUTES
G-6	6	GENERAL ABBREVIATIONS, LEGEND AND SYMBOLS
G-7	7	GENERAL NOTES
G-8	8	OVERALL SITE PLAN AND KEY MAP
		PLAN VIEW SHEETS
C-101	9	PLAN VIEW STA: 175+00 TO 225+00
C-102	10	PLAN VIEW STA: 225+00 TO 275+00
C-103	11	PLAN VIEW STA: 275+00 TO 325+00
C-104	12	PLAN VIEW STA: 325+00 TO 375+00
C-105	13	PLAN VIEW STA: 375+00 TO 425+00
C-106	14	PLAN VIEW STA: 425+00 TO 478+68
C-107	15	PLAN VIEW STA: 478+68 TO 512+00 (STAR BEND FIX IN PLACE)
C-108	16	PLAN VIEW STA: 512+00 TO 575+00
C-109	17	PLAN VIEW STA: 575+00 TO 625+00
C-110	18	PLAN VIEW STA: 625+00 TO 675+00
C-111	19	PLAN VIEW STA: 675+00 TO 725+00
C-112	20	PLAN VIEW STA: 725+00 TO 775+00
C-113	21	PLAN VIEW STA: 775+00 TO 825+00
C-114	22	PLAN VIEW STA: 825+00 TO 875+00
C-115	23	PLAN VIEW STA: 875+00 TO 925+00
C-116	24	PLAN VIEW STA: 925+00 TO 975+00
C-117	25	PLAN VIEW STA: 975+00 TO 1025+00
C-118	26	PLAN VIEW STA: 1025+00 TO 1075+00
C-119	27	PLAN VIEW STA: 1075+00 TO 1125+00
C-120	28	PLAN VIEW STA: 1125+00 TO 1175+00
C-121	29	PLAN VIEW STA: 1175+00 TO 1225+00
C-122	30	PLAN VIEW STA: 1225+00 TO 1275+00
C-123	31	PLAN VIEW STA: 1275+00 TO 1325+00
C-124	32	PLAN VIEW STA: 1325+00 TO 1375+00
C-125	22	PLAN VIEW STA: 1375+00 TO 1433+83
C-126	34	PLAN VIEW STA: 1433+83 TO 1475+00
C-127	35	PLAN VIEW STA: 1475+00 TO 1525+00
C-128	36	PLAN VIEW STA: 1525+00 TO 1575+00
C-129	37	PLAN VIEW STA: 1575+00 TO 1625+00
C-130	38	PLAN VIEW STA: 1625+00 TO 1675+00
C-131	39	PLAN VIEW STA: 1675+00 TO 1725+00
C-132	40	PLAN VIEW STA: 1725+00 TO 1775+00
C-133	41	PLAN VIEW STA: 1775+00 TO 1825+00
C-134	42	PLAN VIEW STA: 1825+00 TO 1875+00
C-135	43	PLAN VIEW STA: 1875+00 TO 1925+00
C-136	44	PLAN VIEW STA: 1925+00 TO 1975+00
C-137	45	PLAN VIEW STA: 1975+00 TO 2025+00
C-138	46	PLAN VIEW STA: 2025+00 TO 2075+00
C-139	47	PLAN VIEW STA: 2075+00 TO 2125+00
C-140	48	PLAN VIEW STA: 2125+00 TO 2175+00
C-141	49	PLAN VIEW STA: 2175+00 TO 2225+00
C-142	50	PLAN VIEW STA: 2225+00 TO 2275+00
C-143	51	PLAN VIEW STA: 2275+00 TO 2325+00
C-144	52	PLAN VIEW STA: 2325+00 TO 2368+00
C-145	53	PLAN VIEW STA: 478+68 TO 512+00 (STAR BEND SETBACK)

DWG NO.	SHT NO.	DESCRIPTION
		PROFILE VIEW SHEETS
C-201	54	PROFILE VIEW STA: 175+00 TO 225+00
C-202	55	PROFILE VIEW STA: 225+00 TO 275+00
C-203	56	PROFILE VIEW STA: 275+00 TO 325+00
C-204	57	PROFILE VIEW STA: 325+00 TO 375+00
C-205	58	PROFILE VIEW STA: 375+00 TO 425+00
C-206	59	PROFILE VIEW STA: 425+00 TO 478+68
C-207	60	PROFILE VIEW STA: 478+68 TO 512+00 (STAR BEND FIX IN PLACE)
C-208	61	PROFILE VIEW STA: 512+00 TO 575+00
C-209	62	PROFILE VIEW STA: 575+00 TO 625+00
C-210	63	PROFILE VIEW STA: 625+00 TO 675+00
C-211	64	PROFILE VIEW STA: 675+00 TO 725+00
C-212	65	PROFILE VIEW STA: 725+00 TO 775+00
C-213	66	PROFILE VIEW STA: 775+00 TO 825+00
C-214	67	PROFILE VIEW STA: 825+00 TO 875+00
C-215	68	PROFILE VIEW STA: 875+00 TO 925+00
C-216	69	PROFILE VIEW STA: 925+00 TO 975+00
C-217	70	PROFILE VIEW STA: 975+00 TO 1025+00
C-218	71	PROFILE VIEW STA: 1025+00 TO 1075+00
C-219	72	PROFILE VIEW STA: 1075+00 TO 1125+00
C-220	73	PROFILE VIEW STA: 1125+00 TO 1175+00
C-221	74	PROFILE VIEW STA: 1175+00 TO 1225+00
C-222	75	PROFILE VIEW STA: 1225+00 TO 1275+00
C-223	76	PROFILE VIEW STA: 1275+00 TO 1325+00
C-224	77	PROFILE VIEW STA: 1325+00 TO 1375+00
C-225	78	PROFILE VIEW STA: 1375+00 TO 1433+83
C-226	79	PROFILE VIEW STA: 1433+83 TO 1475+00
C-227	80	PROFILE VIEW STA: 1475+00 TO 1525+00
C-228	81	PROFILE VIEW STA: 1525+00 TO 1575+00
C-229	82	PROFILE VIEW STA: 1575+00 TO 1625+00
C-230	83	PROFILE VIEW STA: 1625+00 TO 1675+00
C-231	84	PROFILE VIEW STA: 1675+00 TO 1725+00
C-232	85	PROFILE VIEW STA: 1725+00 TO 1775+00
C-233	86	PROFILE VIEW STA: 1775+00 TO 1825+00
C-234	87	PROFILE VIEW STA: 1825+00 TO 1875+00
C-235	88	PROFILE VIEW STA: 1875+00 TO 1925+00
C-236	89	PROFILE VIEW STA: 1925+00 TO 1975+00
C-237	90	PROFILE VIEW STA: 1975+00 TO 2025+00
C-238	91	PROFILE VIEW STA: 2025+00 TO 2075+00
C-239	92	PROFILE VIEW STA: 2075+00 TO 2125+00
C-240	93	PROFILE VIEW STA: 2125+00 TO 2175+00
C-241	94	PROFILE VIEW STA: 2175+00 TO 2225+00
C-242	95	PROFILE VIEW STA: 2225+00 TO 2275+00
C-243	96	PROFILE VIEW STA: 2275+00 TO 2325+00
C-244	97	PROFILE VIEW STA: 2325+00 TO 2368+00
C-245	98	PROFILE VIEW STA: 478+68 TO 512+00 (STAR BEND SETBACK)

DWG NO.	SHT NO.	DESCRIPTION
		TYPICAL LEVEE IMPROVEMENT SECTIONS AND DETAILS
C-301	99	TYPICAL LEVEE IMPROVEMENT – CUTOFF WALL
C-302	100	TYPICAL LEVEE IMPROVEMENT – SEEPAGE BERM
C-303	101	TYPICAL LEVEE IMPROVEMENT – CUTOFF WALL WITH SEEPAGE BERM OR RELIEF WELLS
C-304	102	TYPICAL LEVEE IMPROVEMENT – CUTOFF WALL WITH FULL LEVEE DEGRADE AND RELIEF WELLS
C-305	103	TYPICAL LEVEE IMPROVEMENT – CUTOFF WALL WITH LEVEE RELOCATION
C-306	104	TYPICAL LEVEE IMPROVEMENT – CUTOFF WALL WITH CANAL RELOCATION
C-307	105	TYPICAL LEVEE IMPROVEMENT – TYPICAL CUTOFF WALL WITH LANDSIDE TOE FILL
C-308	106	TYPICAL LEVEE IMPROVEMENT – NEW LEVEE WITH CUTOFF WALL
C-309	107	TYPICAL LEVEE IMPROVEMENT – MISC. DETAILS
C-310	108	TYPICAL LEVEE IMPROVEMENT – STOP LOG STRUCTURE
		TYPICAL UTILITY IMPROVEMENT SECTIONS AND DETAILS
C-401	109	TYPICAL UTILITY IMPROVEMENT – REMOVAL & DISPOSAL OF ABANDONED RAISED PIPE
C-402	110	TYPICAL UTILITY IMPROVEMENT – REMOVAL & DISPOSAL OF ABANDONED THROUGH PIPE
C-403	111	TYPICAL UTILITY IMPROVEMENT – REMOVAL & REPLACMENT OF RAISED PIPE
C-404	112	TYPICAL UTILITY IMPROVEMENT – REMOVAL & REPLACEMENT OF THROUGH PIPE
C-406	113	TYPICAL UTILITY IMPROVEMENT – REMOVAL & REPLACEMENT OF THROUGH PIPE WITH CANAL RELOCATION
C-405	114	TYPICAL UTILITY IMPROVEMENT – REMOVAL & REPLACEMENT OF RAISED PIPE W/CANAL RELOCATION
C-407	115	TYPICAL UTILITY IMPROVEMENT – REMOVAL & REPLACEMENT OF THROUGH PIPE ADJACENT TO CANAL
C-408	116	TYPICAL UTILITY IMPROVEMENT – REMOVAL & REPLACEMENT OF THROUGH PIPE UNDER CANAL
C-409	117	TYPICAL UTILITY IMPROVEMENT – REMOVAL & REPLACEMENT OF THROUGH PIPE UNDER CANAL WITH LEVEE RELOCATION

DWG NO.	SHT NO.	DESCRIPTION

NOT FOR CONSTRUCTION

US Army Corps of Engineers
Sacramento District

Symbol	Description	Date	Approved
DA	DESCRIPTION8	DATE8	APPROVAL8
DA	DESCRIPTION7	DATE7	APPROVAL7
DA	DESCRIPTION6	DATE6	APPROVAL6
DA	DESCRIPTION5	DATE5	APPROVAL5
DA	DESCRIPTION4	DATE4	APPROVAL4
DA	DESCRIPTION3	DATE3	APPROVAL3
DA	DESCRIPTION2	DATE2	APPROVAL2
DA	DESCRIPTION1	DATE1	APPROVAL1

Designed by: –
Dwn by: –
Reviewed by: –
Submitted by: –
CHIEF, CIV ENGR DES SEC. A
Date: –
Spec No.: –
Design file no: –
Drawing Code: –
File name: $$$$date$$$$
Plot date:
Plot scale: –
Rev. –

DEPARTMENT OF THE ARMY
CORPS OF ENGINEERS
SACRAMENTO, CALIFORNIA

SACRAMENTO DISTRICT
IN-HOUSE DESIGN
1325 "J" STREET
SACRAMENTO, CA 95814-2922

SUTTER & BUTTE COUNTY CALIFORNIA
SUTTER BASIN PILOT FEASIBILITY STUDY
DRAFT REPORT
ALTERNATIVE SB-7 AND SB-8
SHEET INDEX

Sheet reference number:
G-2

SUTTER BASIN PILOT FEASIBILITY STUDY

DRAFT REPORT

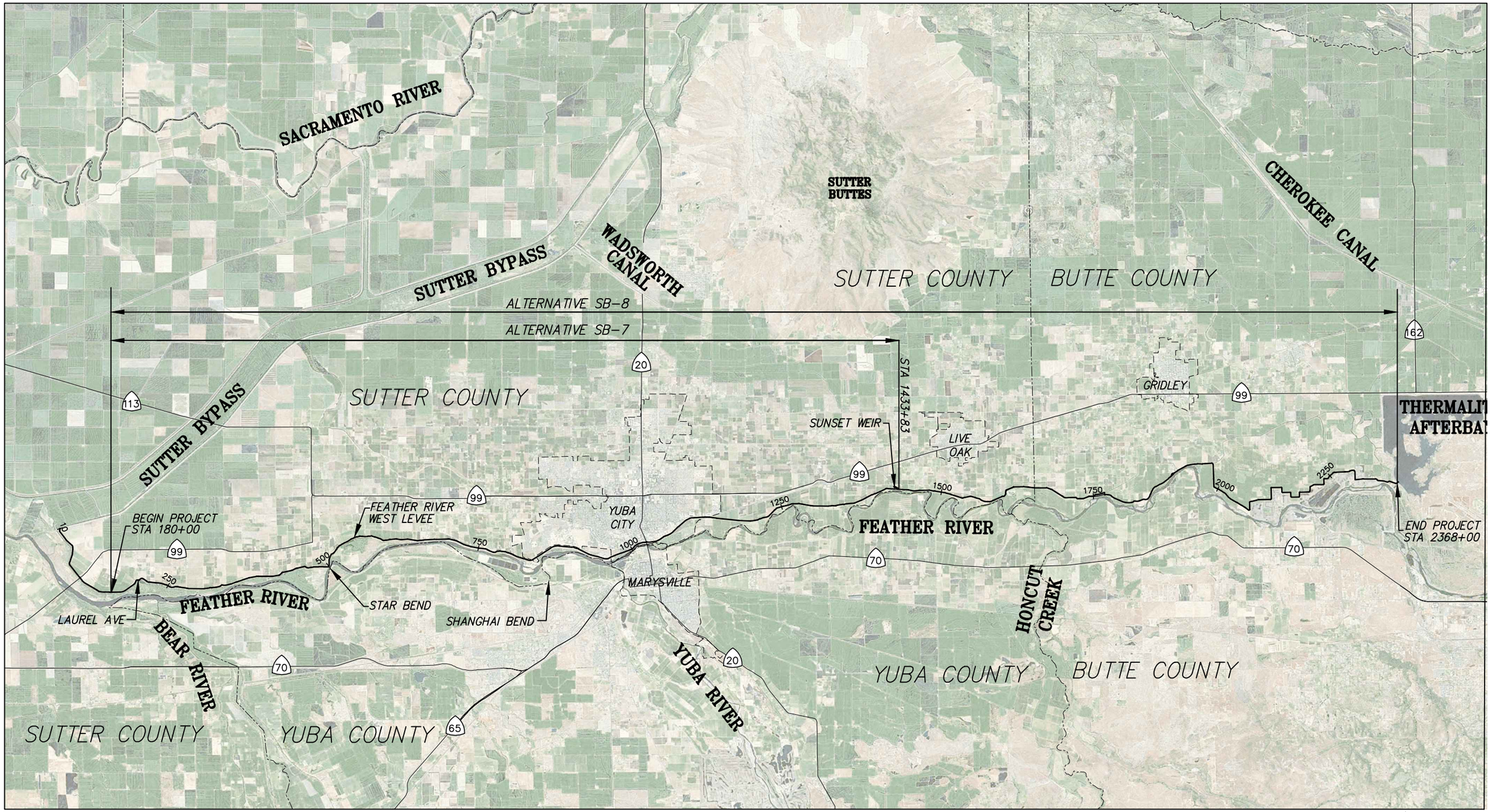

N

8000 4000 0 8000 16000

SCALE: 1"=8000'

NOT FOR CONSTRUCTION

US Army Corps of Engineers®
Sacramento District

Symbol	Description	Date	Approved
DA	DESCRIPTION8	DATE8	APPROVAL
DA	DESCRIPTION7	DATE7	APPROVAL
DA	DESCRIPTION6	DATE6	APPROVAL
DA	DESCRIPTION5	DATE5	APPROVAL
DA	DESCRIPTION4	DATE4	APPROVAL
DA	DESCRIPTION3	DATE3	APPROVAL
DA	DESCRIPTION2	DATE2	APPROVAL
DA	DESCRIPTION1	DATE1	APPROVAL

DEPARTMENT OF THE ARMY
CORPS OF ENGINEERS
SACRAMENTO, CALIFORNIA

SACRAMENTO DISTRICT
ENGINEERING DIVISION
1325 J STREET
SACRAMENTO, CA 95814-2922

Designed by: –		Date: –	Rev: –
Dwn by: –	Spec No.: –	Design file no: –	
Reviewed by: –		Drawing Code: –	
Submitted by: –		File name: $$$$$$name$$$$	
CHIEF, CIV ENGR RES SEC A		Plot date: –	
		Plot scale: –	

SUTTER & BUTTE COUNTY CALIFORNIA

SUTTER BASIN PILOT FEASIBILITY STUDY
DRAFT REPORT

ALTERNATIVE SB-7 AND SB-8
BASIN MAP

Sheet reference number:

G-3

SUTTER BASIN PILOT FEASIBILITY STUDY

DRAFT REPORT

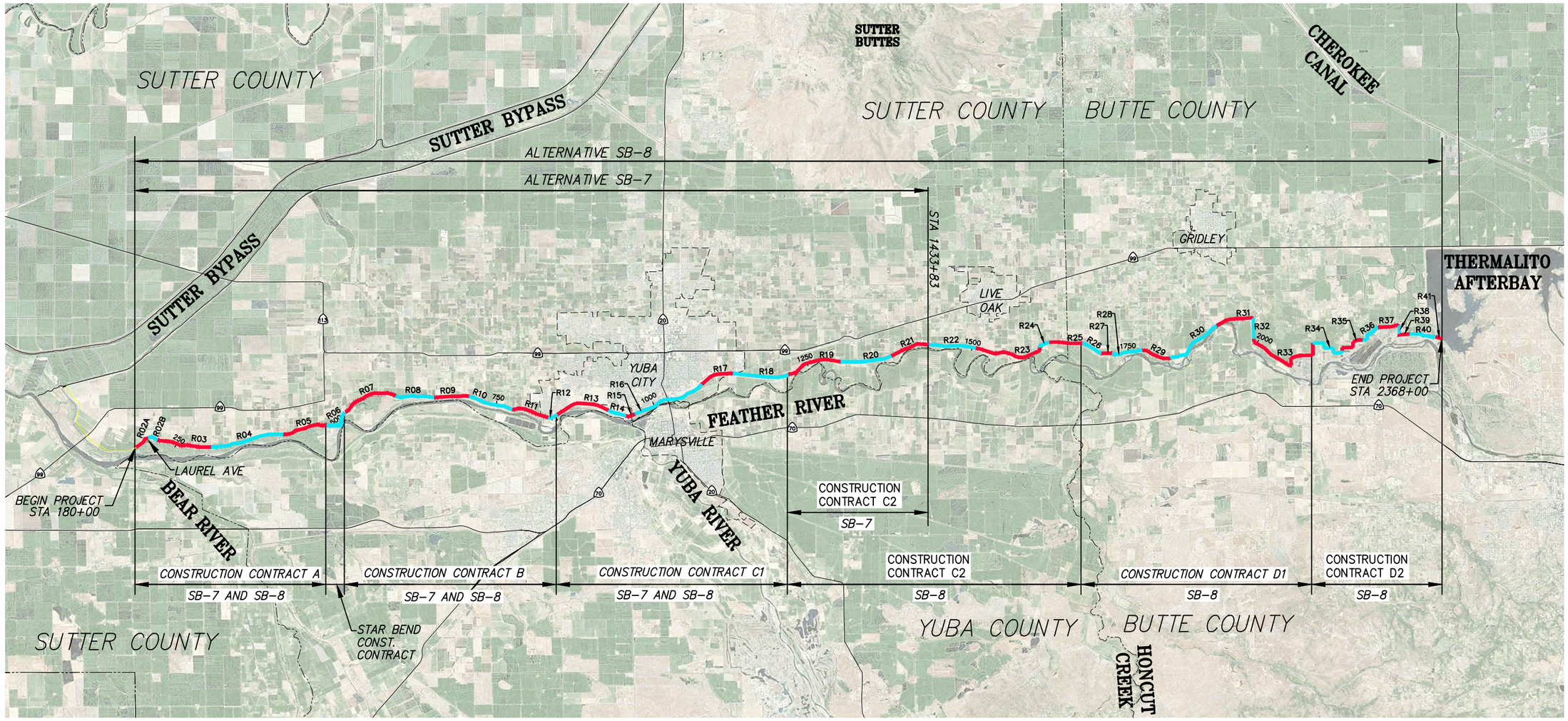

REACH LEGEND

R09 REACH NAME

EVEN REACHES

ODD REACHES (EXCEPT REACH R02A)

N

8000 4000 0 8000 16000

SCALE: 1"=8000'

NOT FOR CONSTRUCTION

US Army Corps of Engineers®
Sacramento District

Symbol	Description	Date	Approved
A8	DESCRIPTION8	DATE8	APPROVAL8
A7	DESCRIPTION7	DATE7	APPROVAL7
A6	DESCRIPTION6	DATE6	APPROVAL6
A5	DESCRIPTION5	DATE5	APPROVAL5
A4	DESCRIPTION4	DATE4	APPROVAL4
A3	DESCRIPTION3	DATE3	APPROVAL3
A2	DESCRIPTION2	DATE2	APPROVAL2
A1	DESCRIPTION1	DATE1	APPROVAL1

Designed by: –
Dwn by: –
Spec No.: –
Reviewed by: –
Submitted by: –
CHIEF, CIV ENGR DES SEC A

Date: –
Design file no: –
Drawing Code: –
File name: $$$$zone$$$$
Plot date: –
Plot scale: –
Rev: –

DEPARTMENT OF THE ARMY
CORPS OF ENGINEERS
SACRAMENTO, CALIFORNIA

SACRAMENTO DISTRICT
HEADQUARTERS DESIGN
1325 "J" STREET
SACRAMENTO, CA. 95814-2922

SUTTER & BUTTE COUNTY CALIFORNIA
SUTTER BASIN PILOT FEASIBILITY STUDY
DRAFT REPORT
ALTERNATIVE SB-7 AND SB-8
VICINITY MAP

Sheet reference number:
G-4

SUTTER BASIN PILOT FEASIBILITY STUDY

DRAFT REPORT

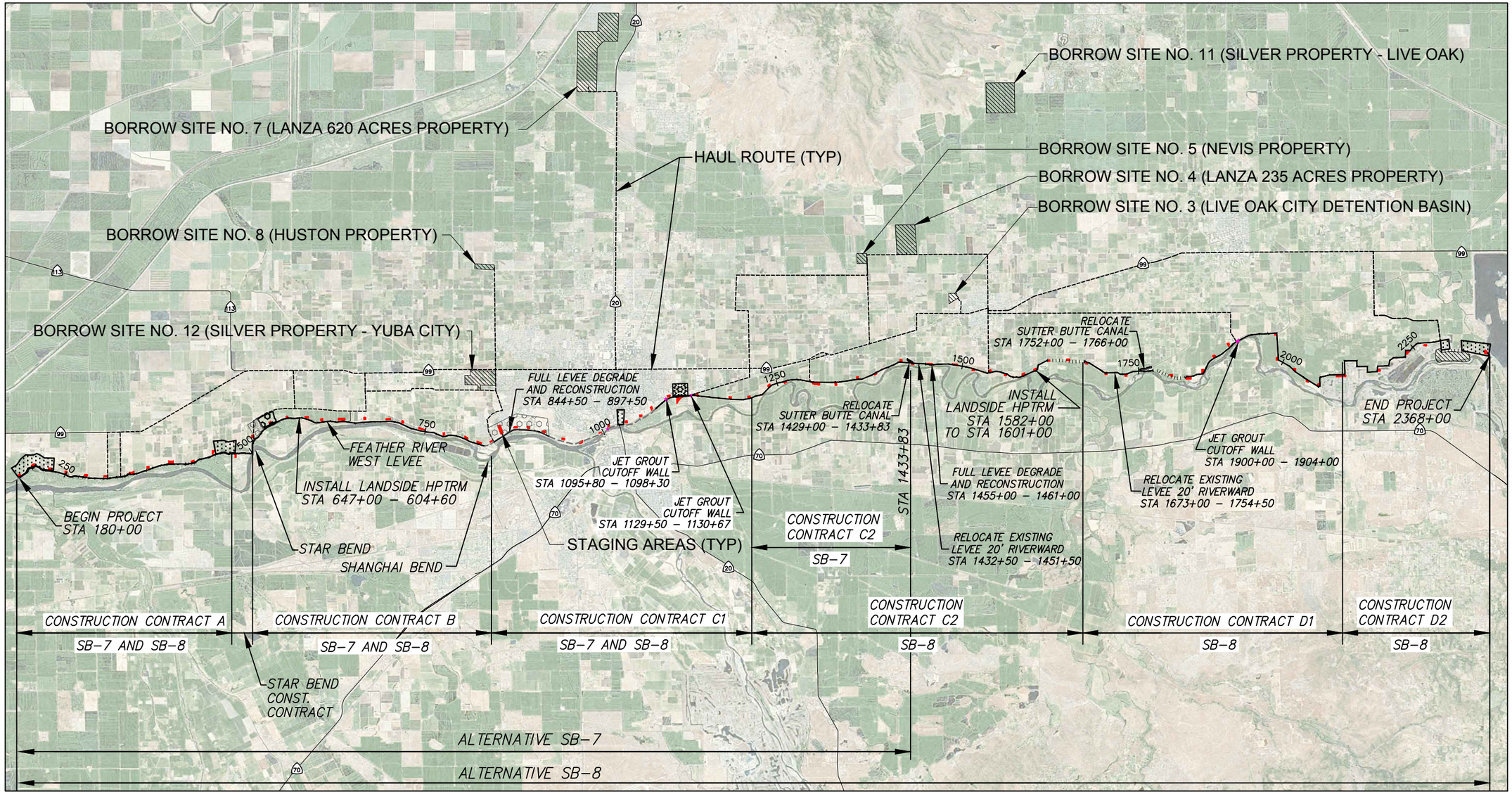

LEVEE IMPROVEMENT LEGEND

- PROP. CUTOFF WALL
- EX. CUTOFF WALL
- NO REHABILITATION REQUIRED
- PROP. LANDSIDE SEEPAGE BERM
- EX. RELIEF WELLS TO REMAIN (STA 512+00 - 545+00 & 844+50 - 923+75)
- PROP. RELIEF WELLS (STA 545+00 - 570+00)
- PROP. LANDSIDE TOE FILL

HAUL ROUTE AND STAGING LEGEND

- BORROW AREA
- STAGING AREA
- HAUL ROUTE

8000 4000 0 8000 16000

SCALE: 1"=8000'

NOT FOR CONSTRUCTION

US Army Corps of Engineers®
Sacramento District

Symbol	Description	Date	Approved
A8	DESCRIPTION8	DATE8	APPROVAL8
A7	DESCRIPTION7	DATE7	APPROVAL7
A6	DESCRIPTION6	DATE6	APPROVAL6
A5	DESCRIPTION5	DATE5	APPROVAL5
A4	DESCRIPTION4	DATE4	APPROVAL4
A3	DESCRIPTION3	DATE3	APPROVAL3
A2	DESCRIPTION2	DATE2	APPROVAL2
A1	DESCRIPTION1	DATE1	APPROVAL1

Designed by: –
Dwn by: –
Spec No.: –
Reviewed by: –
Submitted by: –
CHIEF, CIV ENGR DES SEC A

Date: –
Rev: –
Design file no: –
Drawing Code: –
File name: $$$$$name$$$$
Plot date: –
Plot scale: –

DEPARTMENT OF THE ARMY
CORPS OF ENGINEERS
SACRAMENTO, CALIFORNIA

SACRAMENTO DISTRICT
1325 J STREET
SACRAMENTO, CA 95814-2922

SUTTER & BUTTE COUNTY CALIFORNIA
SUTTER BASIN PILOT FEASIBILITY STUDY
DRAFT REPORT

ALTERNATIVE SB–7 AND SB–8
PROJECT FEATURES, BORROW SITES
AND HAUL ROUTES

Sheet reference number:
G-5

ABBREVIATIONS

APPROX	APPROXIMATE
ATOL	AUTHORIZED TOP OF LEVEE
AVE	AVENUE
AVG	AVERAGE
BLVD	BOULEVARD
BM	BENCHMARK
CL	CENTERLINE
CMP	CORREGATED METAL PIPE
CONST	CONSTRUCTION
DEMO	DEMOLITION
DIA	DIAMETER
DIST	DISTANCE
E	EASTING
EA	EACH
ELEV, EL	ELEVATION
ENGR	ENGINEER
EX	EXISTING
HPTRM	HIGH PERFORMANCE TURF REINFORCING MAT
IRR	IRRIGATION
MAX	MAXIMUM
MH	MANHOLE
MIN	MINIMUM
MISC	MISCELLANEOUS
MW	MONITORING WELL
NGS	NATIONAL GEODETIC SURVEY
NGVD	NATIONAL GEODETIC VERTICAL DATUM
NTS	NOT TO SCALE
OH	OVERHEAD
O&M	OPERATION AND MAINTENANCE
PL	PROPERTY LINE
PP	POWER POLE
PROP	PROPOSED
PS	PUMP STATION
QTY	QUANTITY
R/W, ROW	RIGHT OF WAY
RCP	REINFORCED CONCRETE PIPE
RD	ROAD
RM	RIVER MILE
RR	RAILROAD
RSP	ROCK SLOPE PROTECTION
RT	RELIEF WELL
ST	STREET
STA	STATION
STD	STANDARD
TEMP	TEMPORARY
TOPO	TOPOGRAPHY
TYP	TYPICAL
UTIL	UTILITY
VFZ	VEGETATION FREE ZONE
WSE	WATER SURFACE ELEVATION
WY	WAY

LEGEND AND SYMBOLS

EXISTING FEATURES		PROPOSED FEATURES
	CENTERLINE	
	PROPERTY LINE	N/A
	RIGHT OF WAY	N/A
N/A	O&M/VFZ/CONSTRUCTION LIMIT	
N/A	JET GROUT WALL (PLAN VIEW)	
N/A	JET GROUT WALL (PROFILE VIEW)	
	CUTOFF WALL (PLAN VIEW)	
	CUTOFF WALL (PROFILE VIEW)	
N/A	LEVEE DEGRADE/WORKING SURFACE	
	LEVEE/BERM TOE	
N/A	LEVEE CREST	
N/A	BERM TOP	
	1957 ATOL	N/A
N/A	STAGING AREA	
N/A	HIGH PERFORMANCE TURF REINFORCING MAT	
N/A	EARTH SLOPE	TOP / TOE
N/A	CONTROL LINE W/STATION	48+00
N/A	LEVEE EMBANKMENT FILL (SOIL TYPE 1)	
N/A	RANDOM FILL AREA	
	EXISTING STRUCTURE FOR DEMOLITION	N/A

NOTES:

1. THIS SHEET APPLIES TO THE ENTIRE SET OF DRAWINGS. THIS IS A STANDARD DRAWING LISTING SHOWING ABBREVIATIONS AND SYMBOLOGY. ALL ABBREVIATIONS AND SYMBOLOGY ARE NOT NECESSARILY USED ON THIS PROJECT.
2. SCREENING OR SHADING OF WORK IS USED TO INDICATE EXISTING COMPONENTS OR TO DE-EMPHASIZE PROPOSED IMPROVEMENTS TO HIGHLIGHT SELECTED TRADE WORK. REFER TO CONTEXT OF EACH DRAWING FOR USACE.

NOT FOR CONSTRUCTION

US Army Corps of Engineers®
Sacramento District

Symbol	Description	Date	Approved
D8	DESCRIPTION8	DATE8	APPROVAL8
D7	DESCRIPTION7	DATE7	APPROVAL7
D6	DESCRIPTION6	DATE6	APPROVAL6
D5	DESCRIPTION5	DATE5	APPROVAL5
D4	DESCRIPTION4	DATE4	APPROVAL4
D3	DESCRIPTION3	DATE3	APPROVAL3
D2	DESCRIPTION2	DATE2	APPROVAL2
D1	DESCRIPTION1	DATE1	APPROVAL1

DEPARTMENT OF THE ARMY
CORPS OF ENGINEERS
SACRAMENTO, CALIFORNIA

SACRAMENTO DISTRICT
NAVIGATION DIVISION
1325 "J" STREET
SACRAMENTO, CA 95814-2922

Designed by: –
Dwn by: –
Spec No.: –
Reviewed by: –
Submitted by: –
CHIEF, CIV ENGR DES SEC A
Date: –
Design file no: –
Drawing Code: –
File name: $$$$date$$$$
Plot date: –
Plot scale: –
Rev. –

SUTTER & BUTTE COUNTY CALIFORNIA
SUTTER BASIN PILOT FEASIBILITY STUDY
DRAFT REPORT
ALTERNATIVE SB-7 AND SB-8
GENERAL ABBREVIATIONS, LEGEND AND SYMBOLS

Sheet reference number:
G-6

ALTERNATIVE SB7

Measure	Typical Section (Sheet)	Segment	Contract	Beg. STA of Measure	End. STA of Measure	Length per Segment (LF)	Length per Contract (LF)	Length per Measure (LF)
No Rehabilitation Required	-	1	B	831+50	844+50	1,300	1,300	
No Rehabilitation Required	-	2	C1	923+75	1006+24	8,249		
No Rehabilitation Required	-	3	C1	1007+70	1024+00	1,630		
No Rehabilitation Required	-	4	C1	1027+50	1078+00	5,050	14,930	16,230
Cutoff Wall Only	C-301	1	A	231+00	453+00	22,200	22,200	
Cutoff Wall Only	C-301	2	SBFIP	478+68	512+00	3,332	3,340	
Cutoff Wall Only	C-301	3	B	570+00	831+50	26,150	26,150	
Cutoff Wall Only	C-301	4	C1	1078+00	1096+00	1,800		
Cutoff Wall Only	C-301	5	C1	1098+10	1107+00	890		
Cutoff Wall Only	C-301	6	C1	1125+70	1129+99	429		
Cutoff Wall Only	C-301	7	C1	1130+20	1213+85	8,365	11,490	
Cutoff Wall Only	C-301	7	C2	1213+85	1429+00	21,515	21,520	84,700
Jet Grouting Cutoff Wall Only	C-301	1	C1	1006+04	1007+90	186		
Jet Grouting Cutoff Wall Only	C-301	2	C1	1095+80	1098+30	250		
Jet Grouting Cutoff Wall Only	C-301	3	C1	1129+50	1130+67	117	560	560
Seepage Berm Only	C-302	1	C1	1024+00	1027+50	350	350	350
Cutoff Wall with Full Levee Degrade and Existing Relief Wells	C-304	1	C1	844+50	897+50	5,300	5,300	5,300
Cutoff Wall with Full Levee Degrade	C-304	-	-	0+00	0+00	0	0	0
Cutoff Wall with Existing Relief Wells	C-303	1	B	512+00	545+00	3,300	3,300	
Cutoff Wall with Existing Relief Wells	C-303	3	C1	897+50	923+75	2,625	2,630	5,930
Cutoff Wall with New Relief Wells	C-303	2	B	545+00	570+00	2,500	2,500	2,500
Cutoff Wall with Seepage Berm	C-303	1	A	180+00	231+00	5,100		
Cutoff Wall with Seepage Berm	C-303	2	A	453+00	478+68	2,568	7,670	7,670
Cutoff Wall with Levee Relocation	C-305	-	-	0+00	0+00	0	0	0
Cutoff Wall with Sutter Butte Canal Relocation	C-306	1	C2	1429+00	1432+70	370	370	370
Cutoff Wall with Landside Toe Fill	C-307	1	C1	1107+00	1125+70	1,870	1,870	1,870
DSM Cutoff Wall (already included in the Cutoff Wall Only section)	C-301	1	A	230+00	250+00	2,000	2,000	
DSM Cutoff Wall (already included in the Cutoff Wall Only section)	C-301	2	C1	1125+00	1129+99	499		
DSM Cutoff Wall (already included in the Cutoff Wall Only section)	C-301	3	C1	1130+20	1151+50	2,130	2,630	
DSM Cutoff Wall (already included in the Cutoff Wall Only section)	C-301	4	C2	1224+00	1248+00	2,400	2,400	7,030
Erosion Protection	-	1	B	547+00	604+60	5,760	5,760	5,760
Closure Structure (Stop Log)	-	1	C1	1130+00	1130+00	-	-	-

ALTERNATIVE SB8

Measure	Typical Section (Sheet)	Segment	Contract	Beg. STA of Measure	End. STA of Measure	Length per Segment (LF)	Length per Contract (LF)	Length per Measure (LF)
No Rehabilitation Required	-	1	B	831+50	844+50	1,300	1,300	
No Rehabilitation Required	-	2	C1	923+75	1006+24	8,249		
No Rehabilitation Required		3	C1	1007+70	1024+00	1,630		
No Rehabilitation Required		4	C1	1027+50	1078+00	5,050	14,930	
No Rehabilitation Required	-	5	C2	1625+00	1673+00	4,800	4,800	
No Rehabilitation Required	-	6	D1	1769+40	1813+30	4,390	4,390	
No Rehabilitation Required	-	7	D2	2303+00	2331+00	2,800	2,800	28,220
Cutoff Wall Only	C-301	1	A	231+00	453+00	22,200	22,200	
Cutoff Wall Only	C-301	2	SBFIP	478+68	512+00	3,332	3,340	
Cutoff Wall Only	C-301	3	B	570+00	831+50	26,150	26,150	
Cutoff Wall Only	C-301	4	C1	1078+00	1096+00	1,800		
Cutoff Wall Only	C-301	5	C1	1098+10	1107+00	890		
Cutoff Wall Only	C-301	6	C1	1125+70	1129+99	429		
Cutoff Wall Only	C-301	7	C1	1130+20	1213+85	8,365	11,490	
Cutoff Wall Only	C-301	7	C2	1213+85	1429+00	21,515		
Cutoff Wall Only	C-301	8	C2	1451+50	1455+00	350		
Cutoff Wall Only	C-301	9	C2	1461+00	1608+50	14,750		
Cutoff Wall Only	C 301	10	C2	1624+70	1625+00	30		
Cutoff Wall Only	C 301	11	C2	1673+00	1673+30	30	36,680	
Cutoff Wall Only	C-301	12	D1	1766+00	1769+40	340		
Cutoff Wall Only	C-301	13	D1	1813+30	1900+50	8,720		
Cutoff Wall Only	C-301	14	D1	1903+50	2122+00	21,850	30,910	
Cutoff Wall Only	C-301	14	D2	2122+00	2290+00	16,800	16,800	147,570
Jet Grouting Cutoff Wall Only	C-301	1	C1	1006+04	1007+90	186		
Jet Grouting Cutoff Wall Only	C-301	2	C1	1095+80	1098+30	250		
Jet Grouting Cutoff Wall Only	C-301	3	C1	1129+50	1130+67	117	560	
Jet Grouting Cutoff Wall Only	C-301	4	D1	1900+00	1904+00	400	400	960
Seepage Berm Only	C-302	1	C1	1024+00	1027+50	350	350	
Seepage Berm Only	C-302	2	D2	2290+00	2303+00	1,300		
Seepage Berm Only	C-302	3	D2	2331+00	2368+00	3,700	5,000	5,350
Cutoff Wall with Full Levee Degrade and Existing Relief Wells	C 304	1	C1	844+50	897+50	5,300	5,300	5,300
Cutoff Wall with Full Levee Degrade	C 304	2	C2	1455+00	1461+00	600	600	600
Cutoff Wall with Existing Relief Wells	C-303	1	B	512+00	545+00	3,300	3,300	
Cutoff Wall with Existing Relief Wells	C-303	3	C1	897+50	923+75	2,625	2,630	5,930
Cutoff Wall with New Relief Wells	C-303	2	B	545+00	570+00	2,500	2,500	2,500
Cutoff Wall with Seepage Berm	C-303	1	A	180+00	231+00	5,100		
Cutoff Wall with Seepage Berm	C-303	2	A	453+00	478+68	2,568	7,670	7,670
Cutoff Wall with Levee Relocation	C-305	1	C2	1432+70	1451+50	1,880		
Cutoff Wall with Levee Relocation	C-305	2	C2	1608+50	1624+70	1,620		
Cutoff Wall with Levee Relocation	C-305	3	C2	1673+30	1674+37	107	3,610	
Cutoff Wall with Levee Relocation	C-305	3	D1	1674+37	1754+30	7,993	8,000	11,610
Cutoff Wall with Sutter Butte Canal Relocation	C 306	1	C2	1429+00	1432+70	370	370	
Cutoff Wall with Sutter Butte Canal Relocation	C 306	2	D1	1754+30	1766+00	1,170	1,170	1,540
Cutoff Wall with Landside Toe Fill	C-307	1	C1	1107+00	1125+70	1,870	1,870	1,870
DSM Cutoff Wall (already included in the Cutoff Wall Only section)	C-301	1	A	230+00	250+00	2,000	2,000	
DSM Cutoff Wall (already included in the Cutoff Wall Only section)	C-301	2	C1	1125+00	1129+99	499		
DSM Cutoff Wall (already included in the Cutoff Wall Only section)	C-301	3	C1	1130+20	1151+50	2,130	2,630	
DSM Cutoff Wall (already included in the Cutoff Wall Only section)	C-301	4	C2	1224+00	1248+00	2,400	2,400	
DSM Cutoff Wall (already included in the Cutoff Wall Only section)	C-301	5	D1	1987+25	2002+00	1,475		
DSM Cutoff Wall (already included in the Cutoff Wall Only section)	C-301	6	D1	2016+75	2036+75	2,000		
DSM Cutoff Wall (already included in the Cutoff Wall Only section)	C-301	7	D1	2067+00	2088+00	2,100	5,580	
DSM Cutoff Wall (already included in the Cutoff Wall Only section)	C-301	8	D2	2137+00	2148+00	1,100		
DSM Cutoff Wall (already included in the Cutoff Wall Only section)	C-301	9	D2	2182+00	2196+50	1,450		
DSM Cutoff Wall (already included in the Cutoff Wall Only section)	C-301	10	D2	2245+75	2292+00	4,625	7,180	19,790
Erosion Protection		1	B	547+00	604+60	5,760	5,760	
Erosion Protection		2	C2	1582+00	1601+00	1,900	1,900	7,660
Closure Structure (Stop Log)	-	1	C1	1130+00	1130+00	-	-	-

NOTES REGARDING LAYOUT OF ALTERNATIVE SB–7 AND SB–8

1. SHEETS C–101 THROUGH C–125 ARE THE PLAN VIEW SHEETS FOR ALTERNATIVE SB–7; SHEETS C–201 THROUGH C–225 ARE THE PROFILE VIEW SHEETS FOR ALTERNATIVE SB–7.
2. SHEETS C–126 THROUGH C–144 ARE THE PLAN VIEW SHEETS FROM ALTERNATIVE SB–8; SHEETS C–226 THROUGH C–244 ARE THE PROFILE VIEW SHEET FOR ALTERNATIVE SB–8.
3. SHEETS C–145 AND C–245 ARE THE PLAN AND PROFILE VIEW SHEETS FOR THE STAR BEND SETBACK OPTION, RESPECTIVELY. THIS IS DONE SINCE THE FIX–IN PLACE OPTION IS THE PREFERRED PLAN INCLUDED AS THE RECOMMENDED OPTION FOR ALTERNATIVES SB–7 & SB–8.

NOT FOR CONSTRUCTION

US Army Corps of Engineers®
Sacramento District

Symbol	Description	Date	Approved
D8	DESCRIPTION8	DATE8	APPROVAL8
D7	DESCRIPTION7	DATE7	APPROVAL7
D6	DESCRIPTION6	DATE6	APPROVAL6
D5	DESCRIPTION5	DATE5	APPROVAL5
D4	DESCRIPTION4	DATE4	APPROVAL4
D3	DESCRIPTION3	DATE3	APPROVAL3
D2	DESCRIPTION2	DATE2	APPROVAL2
D1	DESCRIPTION1	DATE1	APPROVAL1

Designed by: – | Date: – | Rev. –
Dwn by: – | Spec No.: – | Design file no: –
Reviewed by: – | Drawing Code: –
Submitted by: – | File name: $$$$date$$$$ | Plot date: | Plot scale: –
CHIEF, CIV ENGR DES SEC A

DEPARTMENT OF THE ARMY
CORPS OF ENGINEERS
SACRAMENTO, CALIFORNIA

SACRAMENTO DISTRICT
IN–HOUSE DESIGN
1325 'J' STREET
SACRAMENTO, CA 95814–2922

SUTTER & BUTTE COUNTY CALIFORNIA
SUTTER BASIN PILOT FEASIBILITY STUDY
DRAFT REPORT
ALTERNATIVE SB–7 AND SB–8
GENERAL NOTES

Sheet reference number:
G-7

B.1.2

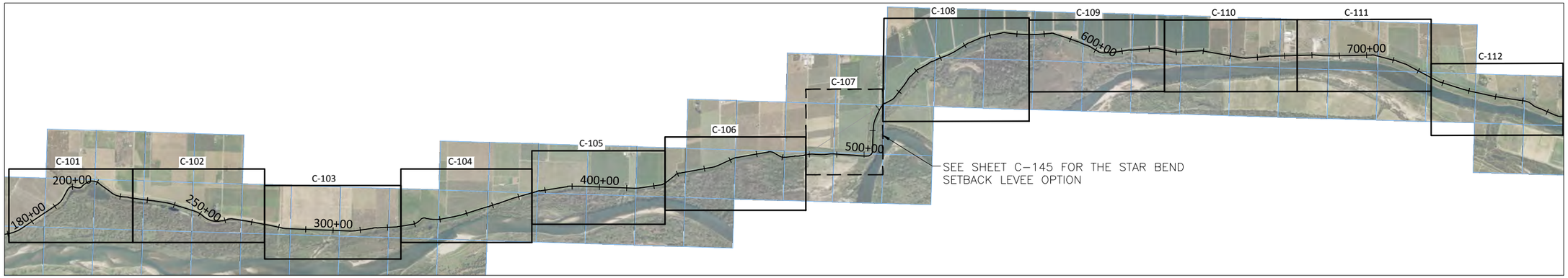

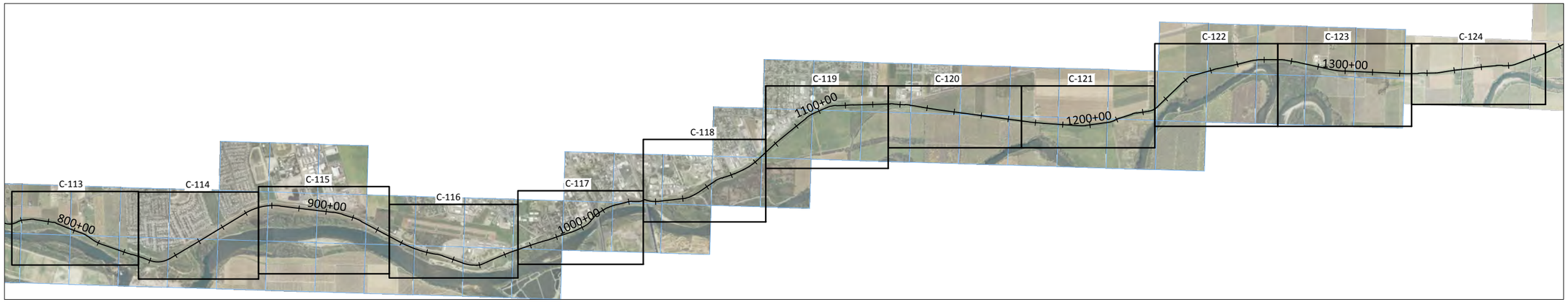

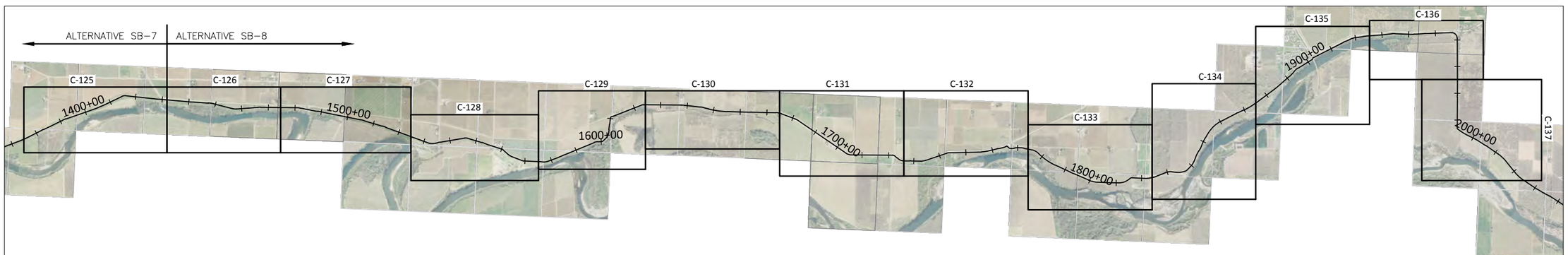

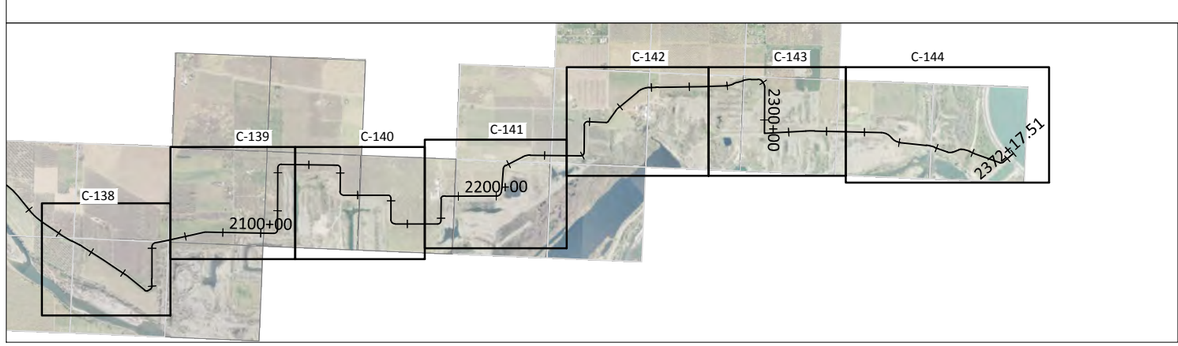

0 2000 4000
DRAWING SCALE

NOT FOR CONSTRUCTION

US Army Corps of Engineers
Sacramento District

Symbol	Description	Date	Approved
DA	DESCRIPTION8	DATE8	APPROVAL8
DA	DESCRIPTION7	DATE7	APPROVAL7
DA	DESCRIPTION6	DATE6	APPROVAL6
DA	DESCRIPTION5	DATE5	APPROVAL5
DA	DESCRIPTION4	DATE4	APPROVAL4
DA	DESCRIPTION3	DATE3	APPROVAL3
DA	DESCRIPTION2	DATE2	APPROVAL2
DA	DESCRIPTION1	DATE1	APPROVAL1

Designed by: –	Date: –	Rev: –	
Dwn by: –	Spec No.: –	Design file no: –	
Reviewed by: –		Drawing Code: –	
Submitted by: – CHIEF, CIV ENGR DES SEC. A		File name: $$$$date+$$$$ Plot date: – Plot scale: –	

DEPARTMENT OF THE ARMY
CORPS OF ENGINEERS
SACRAMENTO, CALIFORNIA

SACRAMENTO DISTRICT
IN-HOUSE DESIGN
1325 "J" STREET
SACRAMENTO, CA 95814-2922

SUTTER & BUTTE COUNTY CALIFORNIA
SUTTER BASIN PILOT FEASIBILITY STUDY
DRAFT REPORT
ALTERNATIVE SB-7 AND SB-8
OVERALL SITE PLAN AND KEY MAP

Sheet reference number:
G-8

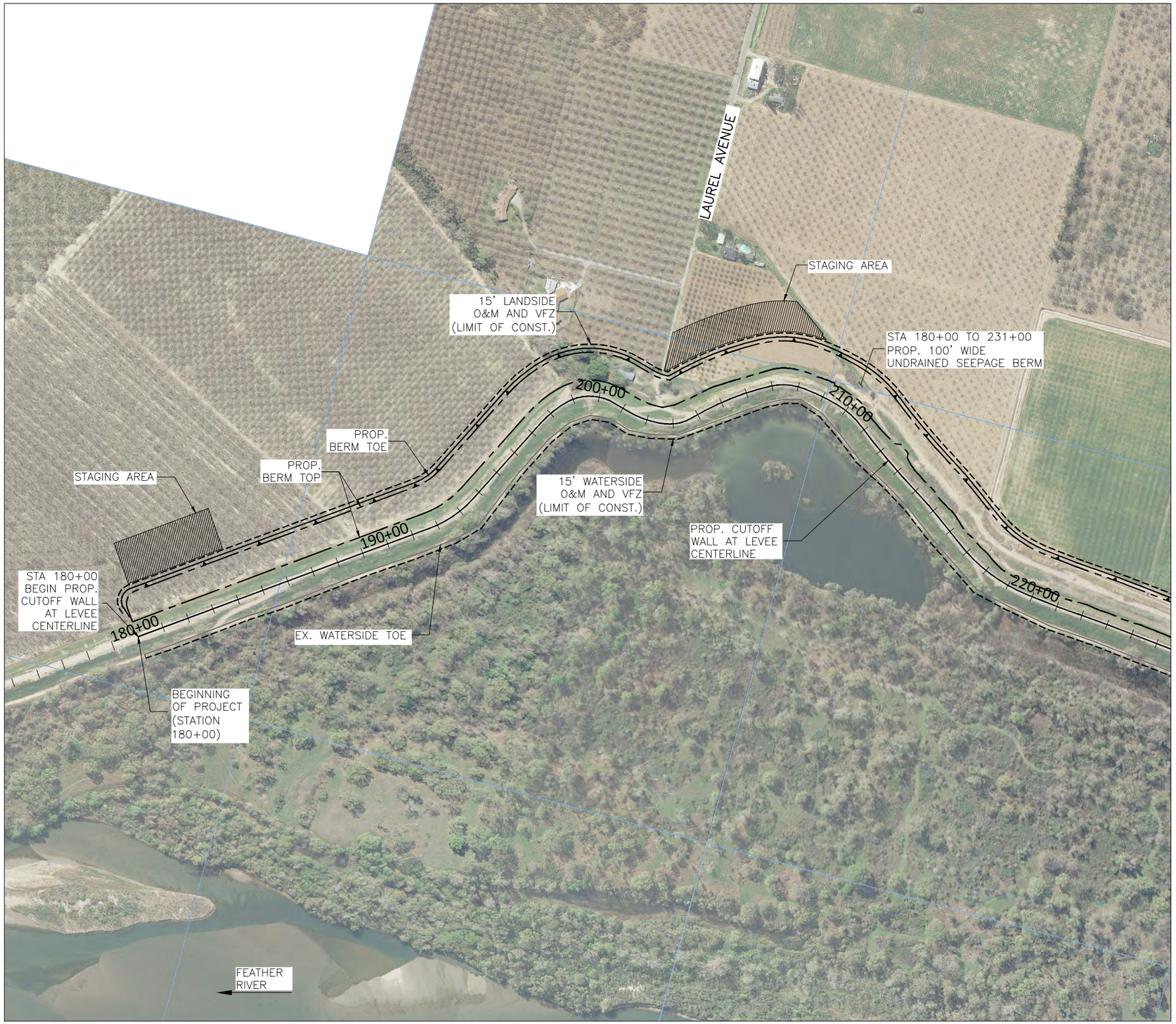

MATCHLINE STATION 225+00 FOR CONTINUATION SEE SHEET C-102

HORIZONTAL DATUM

THE HORIZONTAL DATUM OF THIS SURVEY IS THE NORTH AMERICAN DATUM OF 1983 (NAD83) BEING THE CALIFORNIA COORDINATE SYSTEM OF 1983 ZONE 2 (GRID SURFACE).

N

0 200 400
DRAWING SCALE

NOT FOR CONSTRUCTION

US Army Corps of Engineers
Sacramento District

Symbol	Description	Date	Approved
08	DESCRIPTION8	DATE8	APPROVAL8
07	DESCRIPTION7	DATE7	APPROVAL7
06	DESCRIPTION6	DATE6	APPROVAL6
05	DESCRIPTION5	DATE5	APPROVAL5
04	DESCRIPTION4	DATE4	APPROVAL4
03	DESCRIPTION3	DATE3	APPROVAL3
02	DESCRIPTION2	DATE2	APPROVAL2
01	DESCRIPTION1	DATE1	APPROVAL1

Designed by: –
Dwn by: –
Reviewed by: –
Submitted by: –
Date: –
Rev: –
Spec No.: –
Design file no: –
Drawing Code: –
File name: $$$$date+$$$$
Plot date:
Plot scale: –
CHIEF, CIV ENGR DES SEC. A

DEPARTMENT OF THE ARMY
CORPS OF ENGINEERS
SACRAMENTO, CALIFORNIA

SACRAMENTO DISTRICT
IN-HOUSE DESIGN
1325 "J" STREET
SACRAMENTO, CA 95814-2922

SUTTER & BUTTE COUNTY CALIFORNIA
SUTTER BASIN PILOT FEASIBILITY STUDY
DRAFT REPORT
ALTERNATIVE SB-7 AND SB-8
PLAN VIEW
STA 175+00 TO 225+00

Sheet reference number:
C-101

HORIZONTAL DATUM

THE HORIZONTAL DATUM OF THIS SURVEY IS THE NORTH AMERICAN DATUM OF 1983 (NAD83) BEING THE CALIFORNIA COORDINATE SYSTEM OF 1983 ZONE 2 (GRID SURFACE).

N

0 200 400
DRAWING SCALE

NOT FOR CONSTRUCTION

US Army Corps of Engineers
Sacramento District

Symbol	Description	Date	Approved
0A	DESCRIPTION8	DATE8	APPROVAL8
0A	DESCRIPTION7	DATE7	APPROVAL7
0A	DESCRIPTION6	DATE6	APPROVAL6
0A	DESCRIPTION5	DATE5	APPROVAL5
0A	DESCRIPTION4	DATE4	APPROVAL4
0A	DESCRIPTION3	DATE3	APPROVAL3
0A	DESCRIPTION2	DATE2	APPROVAL2
0A	DESCRIPTION1	DATE1	APPROVAL1

DEPARTMENT OF THE ARMY
CORPS OF ENGINEERS
SACRAMENTO, CALIFORNIA

SACRAMENTO DISTRICT
IN-HOUSE DESIGN
1325 "J" STREET
SACRAMENTO, CA 95814-2922

Designed by: –		Date: –	Rev: –
Dwn by: –	Spec No.: –	Design file no: –	
Reviewed by: –		Drawing Code: –	
Submitted by: –		File name: $$$$date+$$$$	
CHIEF, CIV ENGR DES SEC. A		Plot date: –	
		Plot scale: –	

SUTTER & BUTTE COUNTY CALIFORNIA
SUTTER BASIN PILOT FEASIBILITY STUDY
DRAFT REPORT
ALTERNATIVE SB-7 AND SB-8
PLAN VIEW
STA 225+00 TO 275+00

Sheet reference number:
C-102

HORIZONTAL DATUM

THE HORIZONTAL DATUM OF THIS SURVEY IS THE NORTH AMERICAN DATUM OF 1983 (NAD83) BEING THE CALIFORNIA COORDINATE SYSTEM OF 1983 ZONE 2 (GRID SURFACE).

N

0 200 400
DRAWING SCALE

NOT FOR CONSTRUCTION

US Army Corps of Engineers
Sacramento District

Symbol	Description	Date	Approved
0A	DESCRIPTION8	DATE8	APPROVAL8
0A	DESCRIPTION7	DATE7	APPROVAL7
0A	DESCRIPTION6	DATE6	APPROVAL6
0A	DESCRIPTION5	DATE5	APPROVAL5
0A	DESCRIPTION4	DATE4	APPROVAL4
0A	DESCRIPTION3	DATE3	APPROVAL3
0A	DESCRIPTION2	DATE2	APPROVAL2
0A	DESCRIPTION1	DATE1	APPROVAL1

DEPARTMENT OF THE ARMY
CORPS OF ENGINEERS
SACRAMENTO, CALIFORNIA

SACRAMENTO DISTRICT
IN-HOUSE DESIGN
1325 "J" STREET
SACRAMENTO, CA 95814-2922

Designed by: –	Date: –	Rev: –	
Dwn by: –	Spec No.: –	Design file no: –	
Reviewed by: –		Drawing Code: –	
Submitted by: –		File name:	
CHIEF, CIV ENGR DES SEC. A		Plot date: $$$$date+$$$$ Plot scale: –	

SUTTER & BUTTE COUNTY CALIFORNIA
SUTTER BASIN PILOT FEASIBILITY STUDY
DRAFT REPORT
ALTERNATIVE SB-7 AND SB-8
PLAN VIEW
STA 275+00 TO 325+00

Sheet reference number:
C-103

HORIZONTAL DATUM

THE HORIZONTAL DATUM OF THIS SURVEY IS THE NORTH AMERICAN DATUM OF 1983 (NAD83) BEING THE CALIFORNIA COORDINATE SYSTEM OF 1983 ZONE 2 (GRID SURFACE).

N

0 200 400

DRAWING SCALE

NOT FOR CONSTRUCTION

US Army Corps of Engineers
Sacramento District

Symbol	Description	Date	Approved
08	DESCRIPTION8	DATE8	APPROVAL8
07	DESCRIPTION7	DATE7	APPROVAL7
06	DESCRIPTION6	DATE6	APPROVAL6
05	DESCRIPTION5	DATE5	APPROVAL5
04	DESCRIPTION4	DATE4	APPROVAL4
03	DESCRIPTION3	DATE3	APPROVAL3
02	DESCRIPTION2	DATE2	APPROVAL2
01	DESCRIPTION1	DATE1	APPROVAL1

DEPARTMENT OF THE ARMY
CORPS OF ENGINEERS
SACRAMENTO, CALIFORNIA

SACRAMENTO DISTRICT
IN-HOUSE DESIGN
1325 "J" STREET
SACRAMENTO, CA 95814-2922

Designed by: –		Date: –	Rev: –
Dwn by: –	Spec No.: –	Design file no: –	
Reviewed by: –		Drawing Code: –	
Submitted by: –		File name:	
CHIEF, DIV ENGR SCS SEC A		Plot date: $$$$date$$$$	
		Plot scale: –	

SUTTER & BUTTE COUNTY CALIFORNIA
SUTTER BASIN PILOT FEASIBILITY STUDY
DRAFT REPORT
ALTERNATIVE SB-7 AND SB-8
PLAN VIEW
STA 325+00 TO 375+00

Sheet reference number:
C-104

HORIZONTAL DATUM

THE HORIZONTAL DATUM OF THIS SURVEY IS THE NORTH AMERICAN DATUM OF 1983 (NAD83) BEING THE CALIFORNIA COORDINATE SYSTEM OF 1983 ZONE 2 (GRID SURFACE).

N

0 200 400

DRAWING SCALE

NOT FOR CONSTRUCTION

US Army Corps of Engineers®
Sacramento District

Symbol	Description	Date	Approved
08	DESCRIPTION8	DATE8	APPROVAL8
07	DESCRIPTION7	DATE7	APPROVAL7
06	DESCRIPTION6	DATE6	APPROVAL6
05	DESCRIPTION5	DATE5	APPROVAL5
04	DESCRIPTION4	DATE4	APPROVAL4
03	DESCRIPTION3	DATE3	APPROVAL3
02	DESCRIPTION2	DATE2	APPROVAL2
01	DESCRIPTION1	DATE1	APPROVAL1

DEPARTMENT OF THE ARMY
CORPS OF ENGINEERS
SACRAMENTO, CALIFORNIA

SACRAMENTO DISTRICT
IN-HOUSE DESIGN
1325 "J" STREET
SACRAMENTO, CA 95814-2922

Designed by: –	Date: –	Rev: –	
Dwn by: –	Spec No.: –	Design file no: –	
Reviewed by: –		Drawing Code: –	
Submitted by: –		File name: $$$$date$$$$	
CWSF, CV DSR, RSS SEC. A		Plot date: Plot scale: –	

SUTTER & BUTTE COUNTY CALIFORNIA
SUTTER BASIN PILOT FEASIBILITY STUDY
DRAFT REPORT
ALTERNATIVE SB-7 AND SB-8
PLAN VIEW
STA 375+00 TO 425+00

Sheet reference number:
C-105

HORIZONTAL DATUM

THE HORIZONTAL DATUM OF THIS SURVEY IS THE NORTH AMERICAN DATUM OF 1983 (NAD83) BEING THE CALIFORNIA COORDINATE SYSTEM OF 1983 ZONE 2 (GRID SURFACE).

N

MATCHLINE STATION 425+00 FOR CONTINUATION SEE SHEET C-105

MATCHLINE STATION 478+68 FOR CONTINUATION SEE SHEET C-107

SEE SHEET C-145 FOR STAR BEND SETBACK OPTION

0 200 400

DRAWING SCALE

NOT FOR CONSTRUCTION

US Army Corps of Engineers®
Sacramento District

Symbol	Description	Date	Approved
1A	DESCRIPTION1	DATE1	APPROVAL1
2A	DESCRIPTION2	DATE2	APPROVAL2
3A	DESCRIPTION3	DATE3	APPROVAL3
4A	DESCRIPTION4	DATE4	APPROVAL4
5A	DESCRIPTION5	DATE5	APPROVAL5
6A	DESCRIPTION6	DATE6	APPROVAL6
7A	DESCRIPTION7	DATE7	APPROVAL7
8A	DESCRIPTION8	DATE8	APPROVAL8

DEPARTMENT OF THE ARMY
CORPS OF ENGINEERS
SACRAMENTO, CALIFORNIA

SACRAMENTO DISTRICT
IN-HOUSE DESIGN
1325 "J" STREET
SACRAMENTO, CA 95814-2922

Designed by: –		Date: –	Rev: –
Dwn by: –	Spec No.: –	Design file no: –	
Reviewed by: –		Drawing Code: –	
Submitted by: –		File name: $$$$date+$$$$	
CWDF, CV DSR, GS SEC. A		Plot date: –	
		Plot scale: –	

SUTTER & BUTTE COUNTY CALIFORNIA
SUTTER BASIN PILOT FEASIBILITY STUDY
DRAFT REPORT
ALTERNATIVE SB-7 AND SB-8
PLAN VIEW
STA 425+00 TO 478+68

Sheet reference number:
C-106

HORIZONTAL DATUM

THE HORIZONTAL DATUM OF THIS SURVEY IS THE NORTH AMERICAN DATUM OF 1983 (NAD83) BEING THE CALIFORNIA COORDINATE SYSTEM OF 1983 ZONE 2 (GRID SURFACE).

N

NOTE: SEE SHEET C-145 FOR STAR BEND SETBACK OPTION

0 200 400
DRAWING SCALE

NOT FOR CONSTRUCTION

US Army Corps of Engineers
Sacramento District

Symbol	Description	Date	Approved
0A	DESCRIPTION8	DATE8	APPROVAL8
0A	DESCRIPTION7	DATE7	APPROVAL7
0A	DESCRIPTION6	DATE6	APPROVAL6
0A	DESCRIPTION5	DATE5	APPROVAL5
0A	DESCRIPTION4	DATE4	APPROVAL4
0A	DESCRIPTION3	DATE3	APPROVAL3
0A	DESCRIPTION2	DATE2	APPROVAL2
0A	DESCRIPTION1	DATE1	APPROVAL1

DEPARTMENT OF THE ARMY
CORPS OF ENGINEERS
SACRAMENTO, CALIFORNIA

SACRAMENTO DISTRICT
IN-HOUSE DESIGN
1325 "J" STREET
SACRAMENTO, CA 95814-2922

Designed by: –		Date: –	Rev: –
Dwn by: –	Spec No.: –	Design file no: –	
Reviewed by: –		Drawing Code: –	
Submitted by: –		File name: $$$$date$$$$	
CHIEF, CIV ENGR DES SEC. A		Plot date: Plot scale: –	

SUTTER & BUTTE COUNTY CALIFORNIA
SUTTER BASIN PILOT FEASIBILITY STUDY
DRAFT REPORT
ALTERNATIVE SB-7 AND SB-8
PLAN VIEW
STA. 478+68 to STA. 512+00 (MAINLINE)

Sheet reference number:
C-107

HORIZONTAL DATUM

THE HORIZONTAL DATUM OF THIS SURVEY IS THE NORTH AMERICAN DATUM OF 1983 (NAD83) BEING THE CALIFORNIA COORDINATE SYSTEM OF 1983 ZONE 2 (GRID SURFACE).

N

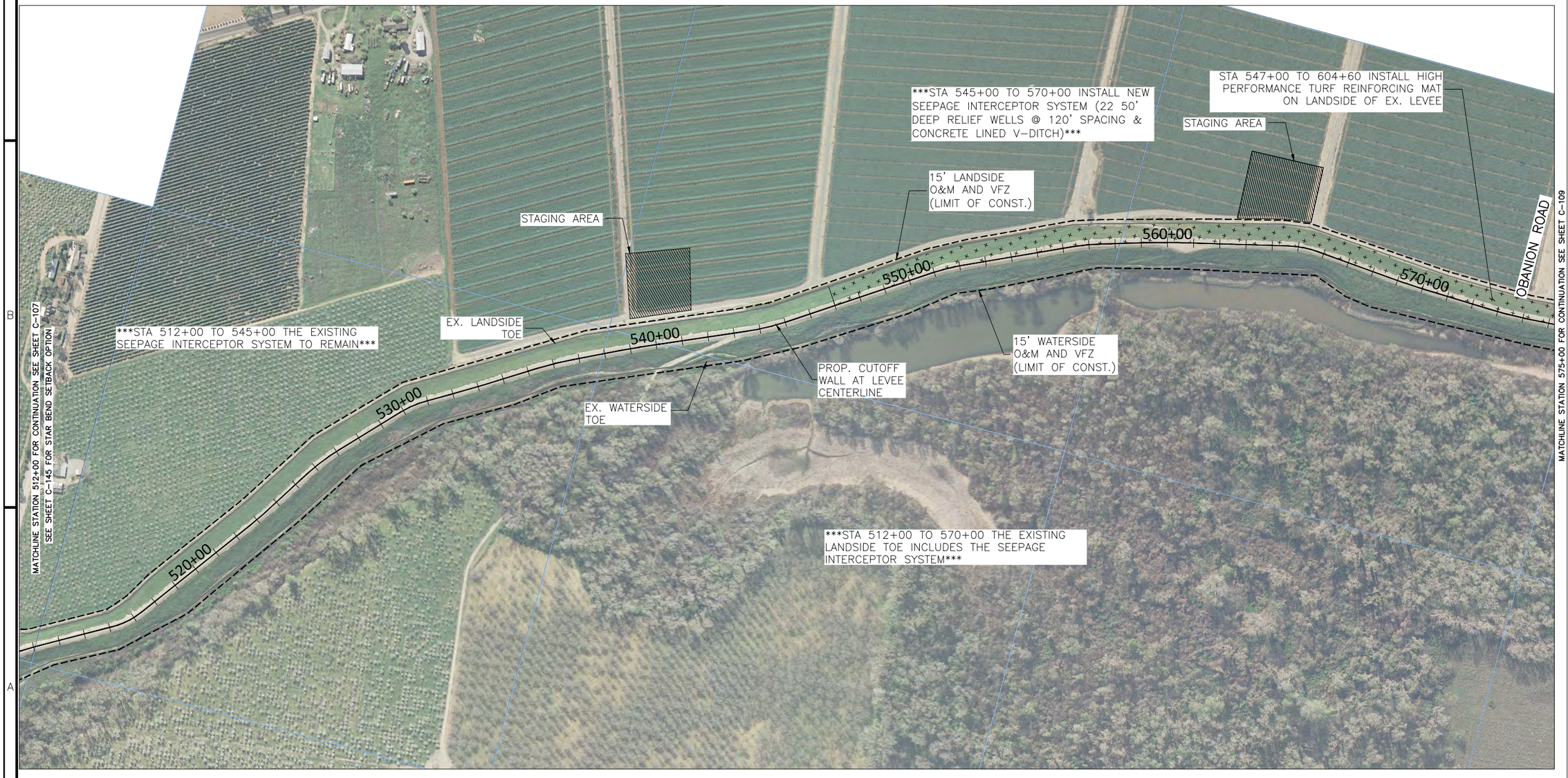

0 200 400

DRAWING SCALE

NOT FOR CONSTRUCTION

US Army Corps of Engineers
Sacramento District

Symbol	Description	Date	Approved
0A	DESCRIPTION1	DATE1	APPROVAL1
0B	DESCRIPTION2	DATE2	APPROVAL2
0C	DESCRIPTION3	DATE3	APPROVAL3
0D	DESCRIPTION4	DATE4	APPROVAL4
0E	DESCRIPTION5	DATE5	APPROVAL5
0F	DESCRIPTION6	DATE6	APPROVAL6
0G	DESCRIPTION7	DATE7	APPROVAL7
0H	DESCRIPTION8	DATE8	APPROVAL8

DEPARTMENT OF THE ARMY
CORPS OF ENGINEERS
SACRAMENTO, CALIFORNIA

SACRAMENTO DISTRICT
IN-HOUSE DESIGN
1325 "J" STREET
SACRAMENTO, CA 95814-2922

Designed by: –		Date: –	Rev: –
Dwn by: –	Spec No.: –	Design file no: –	
Reviewed by: –		Drawing Code: –	
Submitted by: –		File name: $$$$date+$$$$	
CHIEF, CIV DSGN SES SEC. A		Plot date: –	
		Plot scale: –	

SUTTER & BUTTE COUNTY CALIFORNIA
SUTTER BASIN PILOT FEASIBILITY STUDY
DRAFT REPORT
ALTERNATIVE SB-7 AND SB-8
PLAN VIEW
STA 512+00 TO 575+00

Sheet reference number:

C-108

HORIZONTAL DATUM

THE HORIZONTAL DATUM OF THIS SURVEY IS THE NORTH AMERICAN DATUM OF 1983 (NAD83) BEING THE CALIFORNIA COORDINATE SYSTEM OF 1983 ZONE 2 (GRID SURFACE).

N

MATCHLINE STATION 575+00 FOR CONTINUATION SEE SHEET C-108

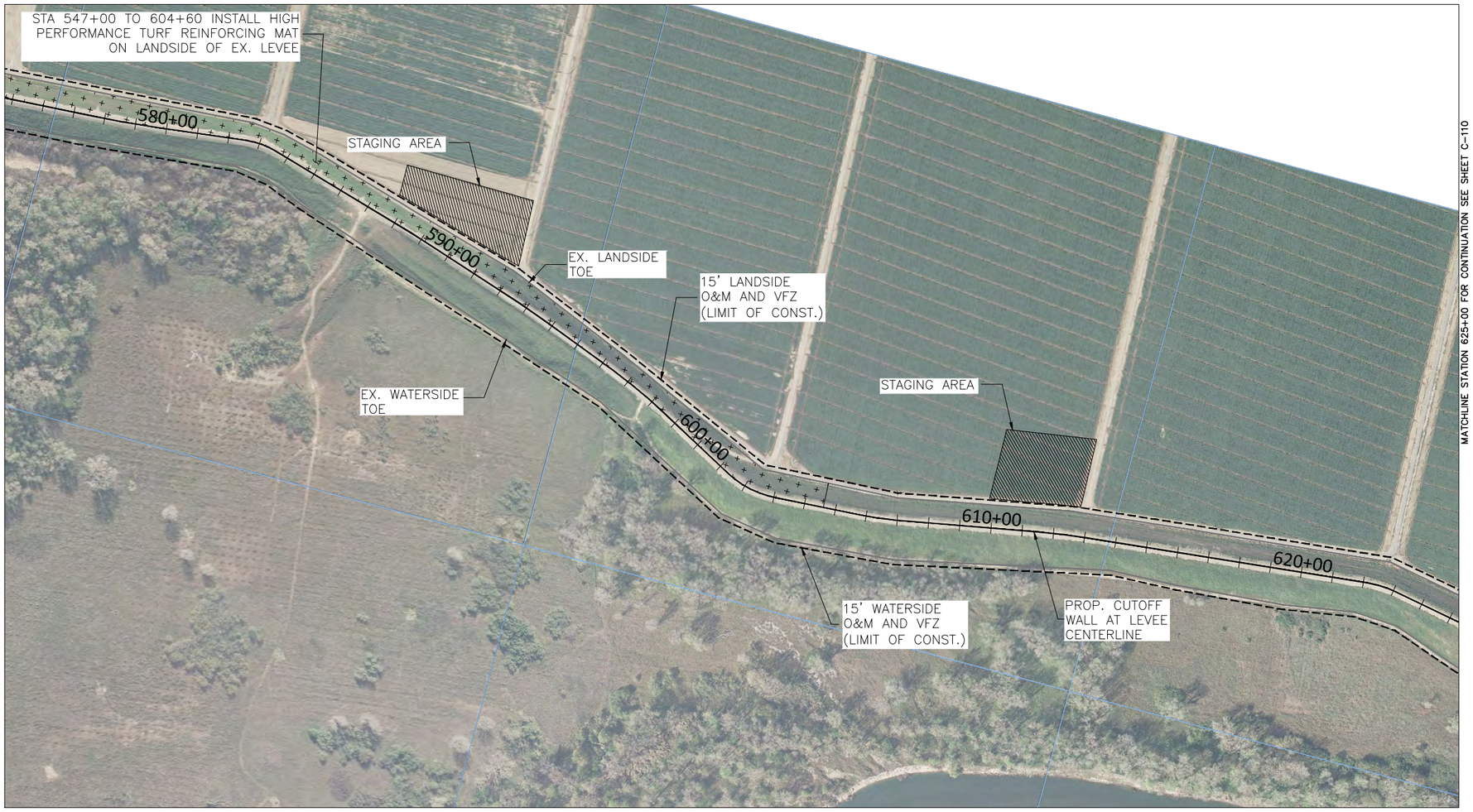

MATCHLINE STATION 625+00 FOR CONTINUATION SEE SHEET C-110

0 200 400
DRAWING SCALE

NOT FOR CONSTRUCTION

US Army Corps of Engineers
Sacramento District

Symbol	Description	Date	Approved
8	DESCRIPTION8	DATE8	APPROVAL8
7	DESCRIPTION7	DATE7	APPROVAL7
6	DESCRIPTION6	DATE6	APPROVAL6
5	DESCRIPTION5	DATE5	APPROVAL5
4	DESCRIPTION4	DATE4	APPROVAL4
3	DESCRIPTION3	DATE3	APPROVAL3
2	DESCRIPTION2	DATE2	APPROVAL2
1	DESCRIPTION1	DATE1	APPROVAL1

DEPARTMENT OF THE ARMY
CORPS OF ENGINEERS
SACRAMENTO, CALIFORNIA

SACRAMENTO DISTRICT
IN-HOUSE DESIGN
1325 "J" STREET
SACRAMENTO, CA 95814-2922

Designed by: –		Date: –	Rev: –
Dwn by: –		Spec No.: –	Design file no: –
Reviewed by: –			Drawing Code: –
Submitted by: –			File name:
CHIEF, DIV DNR DES SEC. A			Plot date: $$$$date$$$$
			Plot scale: –

SUTTER & BUTTE COUNTY CALIFORNIA
SUTTER BASIN PILOT FEASIBILITY STUDY
DRAFT REPORT
ALTERNATIVE SB-7 AND SB-8
PLAN VIEW
STA 575+00 TO 625+00

Sheet reference number:
C-109

HORIZONTAL DATUM

THE HORIZONTAL DATUM OF THIS SURVEY IS THE NORTH AMERICAN DATUM OF 1983 (NAD83) BEING THE CALIFORNIA COORDINATE SYSTEM OF 1983 ZONE 2 (GRID SURFACE).

0 200 400
DRAWING SCALE

NOT FOR CONSTRUCTION

US Army Corps of Engineers
Sacramento District

Symbol	Description	Date	Approved
08	DESCRIPTION8	DATE8	APPROVAL8
07	DESCRIPTION7	DATE7	APPROVAL7
06	DESCRIPTION6	DATE6	APPROVAL6
05	DESCRIPTION5	DATE5	APPROVAL5
04	DESCRIPTION4	DATE4	APPROVAL4
03	DESCRIPTION3	DATE3	APPROVAL3
02	DESCRIPTION2	DATE2	APPROVAL2
01	DESCRIPTION1	DATE1	APPROVAL1

DEPARTMENT OF THE ARMY
CORPS OF ENGINEERS
SACRAMENTO, CALIFORNIA

SACRAMENTO DISTRICT
IN-HOUSE DESIGN
1325 "J" STREET
SACRAMENTO, CA 95814-2922

Designed by: –
Dwn by: –
Spec No.: –
Reviewed by: –
Submitted by: –
CHIEF, CIV ENGR DES SEC A
Date: –
Design file no: –
Drawing Code: –
File name: $$$$date$$$$
Plot date:
Plot scale: –
Rev: –

SUTTER & BUTTE COUNTY CALIFORNIA
SUTTER BASIN PILOT FEASIBILITY STUDY
DRAFT REPORT
ALTERNATIVE SB-7 AND SB-8
PLAN VIEW
STA 625+00 TO 675+00

Sheet reference number:
C-110

HORIZONTAL DATUM

THE HORIZONTAL DATUM OF THIS SURVEY IS THE NORTH AMERICAN DATUM OF 1983 (NAD83) BEING THE CALIFORNIA COORDINATE SYSTEM OF 1983 ZONE 2 (GRID SURFACE).

0 200 400
DRAWING SCALE

NOT FOR CONSTRUCTION

US Army Corps of Engineers
Sacramento District

Symbol	Description	Date	Approved
08	DESCRIPTION8	DATE8	APPROVAL8
07	DESCRIPTION7	DATE7	APPROVAL7
06	DESCRIPTION6	DATE6	APPROVAL6
05	DESCRIPTION5	DATE5	APPROVAL5
04	DESCRIPTION4	DATE4	APPROVAL4
03	DESCRIPTION3	DATE3	APPROVAL3
02	DESCRIPTION2	DATE2	APPROVAL2
01	DESCRIPTION1	DATE1	APPROVAL1

DEPARTMENT OF THE ARMY
CORPS OF ENGINEERS
SACRAMENTO, CALIFORNIA

SACRAMENTO DISTRICT
IN-HOUSE DESIGN
1325 "J" STREET
SACRAMENTO, CA 95814-2922

Designed by: –	Date: –	Rev: –	
Dwn by: –	Spec No.: –	Design file no: –	
Reviewed by: –		Drawing Code: –	
Submitted by: –		File name: $$$$date$$$$	
CHIEF, CIV DSGN BCS SEC. A		Plot date:	Plot scale: –

SUTTER & BUTTE COUNTY CALIFORNIA
SUTTER BASIN PILOT FEASIBILITY STUDY
DRAFT REPORT
ALTERNATIVE SB-7 AND SB-8
PLAN VIEW
STA 675+00 TO 725+00

Sheet reference number:
C-111

HORIZONTAL DATUM

THE HORIZONTAL DATUM OF THIS SURVEY IS THE NORTH AMERICAN DATUM OF 1983 (NAD83) BEING THE CALIFORNIA COORDINATE SYSTEM OF 1983 ZONE 2 (GRID SURFACE).

N

0 200 400

DRAWING SCALE

NOT FOR CONSTRUCTION

US Army Corps of Engineers
Sacramento District

Symbol	Description	Date	Approved
0A	DESCRIPTION1	DATE1	APPROVAL1
0A	DESCRIPTION2	DATE2	APPROVAL2
0A	DESCRIPTION3	DATE3	APPROVAL3
0A	DESCRIPTION4	DATE4	APPROVAL4
0A	DESCRIPTION5	DATE5	APPROVAL5
0A	DESCRIPTION6	DATE6	APPROVAL6
0A	DESCRIPTION7	DATE7	APPROVAL7
0A	DESCRIPTION8	DATE8	APPROVAL8

Designed by: –
Dwn by: –
Spec No.: –
Reviewed by: –
Submitted by: –
CHIEF, CIV ENGR DES SEC A
Date: –
Rev: –
Design file no: –
Drawing Code: –
File name: –
Plot date: $$$$date+$$$$
Plot scale: –

DEPARTMENT OF THE ARMY
CORPS OF ENGINEERS
SACRAMENTO, CALIFORNIA

SACRAMENTO DISTRICT
IN-HOUSE DESIGN
1325 "J" STREET
SACRAMENTO, CA 95814-2922

SUTTER & BUTTE COUNTY CALIFORNIA
SUTTER BASIN PILOT FEASIBILITY STUDY
DRAFT REPORT
ALTERNATIVE SB-7 AND SB-8
PLAN VIEW
STA 725+00 TO 775+00

Sheet reference number:
C-112

HORIZONTAL DATUM

THE HORIZONTAL DATUM OF THIS SURVEY IS THE NORTH AMERICAN DATUM OF 1983 (NAD83) BEING THE CALIFORNIA COORDINATE SYSTEM OF 1983 ZONE 2 (GRID SURFACE).

N

0 200 400
DRAWING SCALE

NOT FOR CONSTRUCTION

US Army Corps of Engineers
Sacramento District

Symbol	Description	Date	Approved
08	DESCRIPTION8	DATE8	APPROVAL8
07	DESCRIPTION7	DATE7	APPROVAL7
06	DESCRIPTION6	DATE6	APPROVAL6
05	DESCRIPTION5	DATE5	APPROVAL5
04	DESCRIPTION4	DATE4	APPROVAL4
03	DESCRIPTION3	DATE3	APPROVAL3
02	DESCRIPTION2	DATE2	APPROVAL2
01	DESCRIPTION1	DATE1	APPROVAL1

Designed by: –
Dwn by: –
Reviewed by: –
Submitted by: –
CHIEF, CIV ENGR DES SEC A
Date: –
Spec No.: –
Design file no: –
Drawing Code: –
File name: $$$$date+$$$$
Plot date:
Plot scale: –
Rev. –

DEPARTMENT OF THE ARMY
CORPS OF ENGINEERS
SACRAMENTO, CALIFORNIA

SACRAMENTO DISTRICT
IN-HOUSE DESIGN
1325 "J" STREET
SACRAMENTO, CA 95814-2922

SUTTER & BUTTE COUNTY CALIFORNIA
SUTTER BASIN PILOT FEASIBILITY STUDY
DRAFT REPORT
ALTERNATIVE SB-7 AND SB-8
PLAN VIEW
STA 775+00 TO 825+00

Sheet reference number:
C-113

HORIZONTAL DATUM

THE HORIZONTAL DATUM OF THIS SURVEY IS THE NORTH AMERICAN DATUM OF 1983 (NAD83) BEING THE CALIFORNIA COORDINATE SYSTEM OF 1983 ZONE 2 (GRID SURFACE).

N

0 200 400
DRAWING SCALE

NOT FOR CONSTRUCTION

US Army Corps of Engineers
Sacramento District

Symbol	Description	Date	Approved
0A	DESCRIPTION8	DATE8	APPROVAL8
0A	DESCRIPTION7	DATE7	APPROVAL7
0A	DESCRIPTION6	DATE6	APPROVAL6
0A	DESCRIPTION5	DATE5	APPROVAL5
0A	DESCRIPTION4	DATE4	APPROVAL4
0A	DESCRIPTION3	DATE3	APPROVAL3
0A	DESCRIPTION2	DATE2	APPROVAL2
0A	DESCRIPTION1	DATE1	APPROVAL1

Designed by: –
Dwn by: –
Reviewed by: –
Submitted by: –
CHIEF, CIV DSGN DES SEC A
Date: –
Spec No.: –
Drawing Code: –
File name: $$$$date+$$$$
Plot date:
Plot scale: –
Rev. –

DEPARTMENT OF THE ARMY
CORPS OF ENGINEERS
SACRAMENTO, CALIFORNIA

SACRAMENTO DISTRICT
IN-HOUSE DESIGN
1325 "J" STREET
SACRAMENTO, CA 95814-2922

SUTTER & BUTTE COUNTY CALIFORNIA
SUTTER BASIN PILOT FEASIBILITY STUDY
DRAFT REPORT
ALTERNATIVE SB-7 AND SB-8
PLAN VIEW
STA 825+00 TO 875+00

Sheet reference number:
C-114

MATCHLINE STATION 875+00 FOR CONTINUATION SEE SHEET C-114

MATCHLINE STATION 925+00 FOR CONTINUATION SEE SHEET C-116

HORIZONTAL DATUM

THE HORIZONTAL DATUM OF THIS SURVEY IS THE NORTH AMERICAN DATUM OF 1983 (NAD83) BEING THE CALIFORNIA COORDINATE SYSTEM OF 1983 ZONE 2 (GRID SURFACE).

N

0 200 400

DRAWING SCALE

NOT FOR CONSTRUCTION

US Army Corps of Engineers
Sacramento District

Symbol	Description	Date	Approved
0A	DESCRIPTION8	DATE8	APPROVAL8
0A	DESCRIPTION7	DATE7	APPROVAL7
0A	DESCRIPTION6	DATE6	APPROVAL6
0A	DESCRIPTION5	DATE5	APPROVAL5
0A	DESCRIPTION4	DATE4	APPROVAL4
0A	DESCRIPTION3	DATE3	APPROVAL3
0A	DESCRIPTION2	DATE2	APPROVAL2
0A	DESCRIPTION1	DATE1	APPROVAL1

DEPARTMENT OF THE ARMY
CORPS OF ENGINEERS
SACRAMENTO, CALIFORNIA

SACRAMENTO DISTRICT
IN-HOUSE DESIGN
1325 "J" STREET
SACRAMENTO, CA 95814-2922

Designed by: –		Date: –	Rev: –
Dwn by: –	Spec No.: –	Design file no: –	
Reviewed by: –		Drawing Code: –	
Submitted by: –		File name: $$$$date$$$$	
CHIEF, CIV ENGR DES SEC A		Plot date:	
		Plot scale: –	

SUTTER & BUTTE COUNTY CALIFORNIA
SUTTER BASIN PILOT FEASIBILITY STUDY
DRAFT REPORT
ALTERNATIVE SB-7 AND SB-8
PLAN VIEW
STA 875+00 TO 925+00

Sheet reference number:
C-115

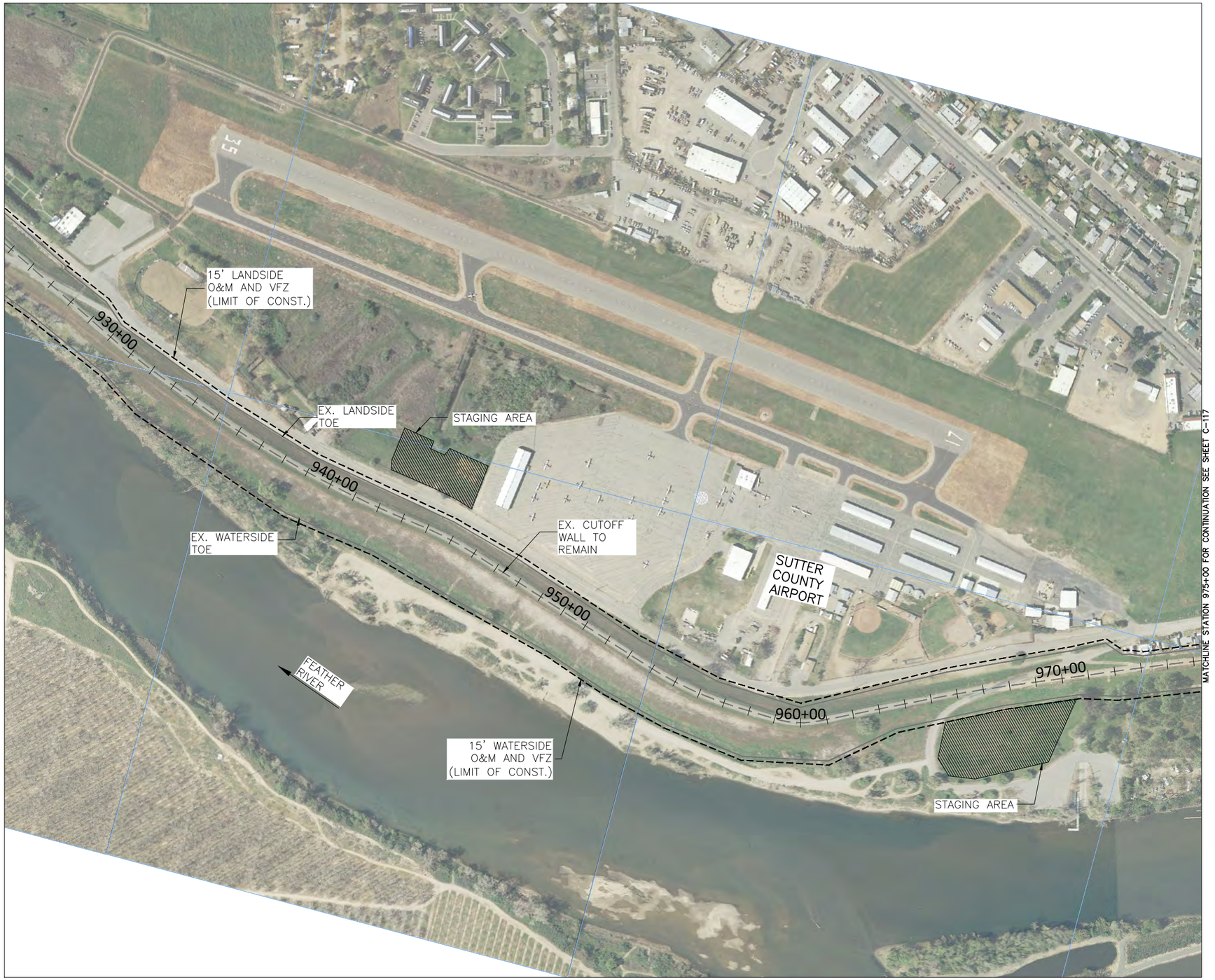

HORIZONTAL DATUM

THE HORIZONTAL DATUM OF THIS SURVEY IS THE NORTH AMERICAN DATUM OF 1983 (NAD83) BEING THE CALIFORNIA COORDINATE SYSTEM OF 1983 ZONE 2 (GRID SURFACE).

N

0 200 400
DRAWING SCALE

NOT FOR CONSTRUCTION

US Army Corps of Engineers
Sacramento District

Symbol	Description	Date	Approved
DA	DESCRIPTION8	DATE8	APPROVAL8
DA	DESCRIPTION7	DATE7	APPROVAL7
DA	DESCRIPTION6	DATE6	APPROVAL6
DA	DESCRIPTION5	DATE5	APPROVAL5
DA	DESCRIPTION4	DATE4	APPROVAL4
DA	DESCRIPTION3	DATE3	APPROVAL3
DA	DESCRIPTION2	DATE2	APPROVAL2
DA	DESCRIPTION1	DATE1	APPROVAL1

DEPARTMENT OF THE ARMY
CORPS OF ENGINEERS
SACRAMENTO, CALIFORNIA

SACRAMENTO DISTRICT
IN-HOUSE DESIGN
1325 "J" STREET
SACRAMENTO, CA 95814-2922

Designed by: –		Date: –	Rev: –
Dwn by: –	Spec No.: –	Design file no: –	
Reviewed by: –		Drawing Code: –	
Submitted by: –		File name: $$$$date+$$$$	
CHIEF, CIV ENGR DES SEC. A		Plot date: –	
		Plot scale: –	

SUTTER & BUTTE COUNTY CALIFORNIA
SUTTER BASIN PILOT FEASIBILITY STUDY
DRAFT REPORT
ALTERNATIVE SB-7 AND SB-8
PLAN VIEW
STA 925+00 TO 975+00

Sheet reference number:
C-116

HORIZONTAL DATUM

THE HORIZONTAL DATUM OF THIS SURVEY IS THE NORTH AMERICAN DATUM OF 1983 (NAD83) BEING THE CALIFORNIA COORDINATE SYSTEM OF 1983 ZONE 2 (GRID SURFACE).

0 200 400
DRAWING SCALE

NOT FOR CONSTRUCTION

US Army Corps of Engineers
Sacramento District

Symbol	Description	Date	Approved
0A	DESCRIPTION8	DATE8	APPROVAL8
0A	DESCRIPTION7	DATE7	APPROVAL7
0A	DESCRIPTION6	DATE6	APPROVAL6
0A	DESCRIPTION5	DATE5	APPROVAL5
0A	DESCRIPTION4	DATE4	APPROVAL4
0A	DESCRIPTION3	DATE3	APPROVAL3
0A	DESCRIPTION2	DATE2	APPROVAL2
0A	DESCRIPTION1	DATE1	APPROVAL1

DEPARTMENT OF THE ARMY
CORPS OF ENGINEERS
SACRAMENTO, CALIFORNIA

SACRAMENTO DISTRICT
IN-HOUSE DESIGN
1325 "J" STREET
SACRAMENTO, CA 95814-2922

Designed by: –	Date: –	Rev: –	
Dwn by: –	Spec No.: –	Design file no: –	
Reviewed by: –		Drawing Code: –	
Submitted by: –		File name: $$$$date+$$$$	
CHIEF, CIV ENGR DES SEC. A		Plot date: –	Plot scale: –

SUTTER & BUTTE COUNTY CALIFORNIA
SUTTER BASIN PILOT FEASIBILITY STUDY
DRAFT REPORT
ALTERNATIVE SB-7 AND SB-8
PLAN VIEW
STA 975+00 TO 1025+00

Sheet reference number:
C-117

HORIZONTAL DATUM

THE HORIZONTAL DATUM OF THIS SURVEY IS THE NORTH AMERICAN DATUM OF 1983 (NAD83) BEING THE CALIFORNIA COORDINATE SYSTEM OF 1983 ZONE 2 (GRID SURFACE).

N

0 200 400
DRAWING SCALE

NOT FOR CONSTRUCTION

US Army Corps of Engineers
Sacramento District

Symbol	Description	Date	Approved
08	DESCRIPTION8	DATE8	APPROVAL8
07	DESCRIPTION7	DATE7	APPROVAL7
06	DESCRIPTION6	DATE6	APPROVAL6
05	DESCRIPTION5	DATE5	APPROVAL5
04	DESCRIPTION4	DATE4	APPROVAL4
03	DESCRIPTION3	DATE3	APPROVAL3
02	DESCRIPTION2	DATE2	APPROVAL2
01	DESCRIPTION1	DATE1	APPROVAL1

Designed by: –
Dwn by: –
Reviewed by: –
Submitted by: –
CHIEF, CIV ENGR DES SEC A
Rev: –
Date: –
Spec No.: –
Design file no: –
Drawing Code: –
File name: $$$$date+$$$$
Plot date:
Plot scale: –

DEPARTMENT OF THE ARMY
CORPS OF ENGINEERS
SACRAMENTO, CALIFORNIA

SACRAMENTO DISTRICT
IN-HOUSE DESIGN
1325 "J" STREET
SACRAMENTO, CA 95814-2922

SUTTER & BUTTE COUNTY CALIFORNIA
SUTTER BASIN PILOT FEASIBILITY STUDY
DRAFT REPORT
ALTERNATIVE SB-7 AND SB-8
PLAN VIEW
STA 1025+00 TO 1075+00

Sheet reference number:
C-118

HORIZONTAL DATUM

THE HORIZONTAL DATUM OF THIS SURVEY IS THE NORTH AMERICAN DATUM OF 1983 (NAD83) BEING THE CALIFORNIA COORDINATE SYSTEM OF 1983 ZONE 2 (GRID SURFACE).

0 200 400

DRAWING SCALE

NOT FOR CONSTRUCTION

US Army Corps of Engineers
Sacramento District

Symbol	Description	Date	Approved
08	DESCRIPTION8	DATE8	APPROVAL8
07	DESCRIPTION7	DATE7	APPROVAL7
06	DESCRIPTION6	DATE6	APPROVAL6
05	DESCRIPTION5	DATE5	APPROVAL5
04	DESCRIPTION4	DATE4	APPROVAL4
03	DESCRIPTION3	DATE3	APPROVAL3
02	DESCRIPTION2	DATE2	APPROVAL2
01	DESCRIPTION1	DATE1	APPROVAL1

DEPARTMENT OF THE ARMY
CORPS OF ENGINEERS
SACRAMENTO, CALIFORNIA

SACRAMENTO DISTRICT
IN-HOUSE DESIGN
1325 "J" STREET
SACRAMENTO, CA 95814-2922

Designed by: –		Date: –	Rev: –
Dwn by: –	Spec No.: –	Design file no: –	
Reviewed by: –		Drawing Code: –	
Submitted by: –		File name: $$$$date+$$$$	
Chief, CIV ENGR DES SEC A		Plot date: –	
		Plot scale: –	

SUTTER & BUTTE COUNTY CALIFORNIA
SUTTER BASIN PILOT FEASIBILITY STUDY
DRAFT REPORT
ALTERNATIVE SB-7 AND SB-8
PLAN VIEW
STA 1075+00 TO 1125+00

Sheet reference number:
C-119

HORIZONTAL DATUM

THE HORIZONTAL DATUM OF THIS SURVEY IS THE NORTH AMERICAN DATUM OF 1983 (NAD83) BEING THE CALIFORNIA COORDINATE SYSTEM OF 1983 ZONE 2 (GRID SURFACE).

0 200 400
DRAWING SCALE

NOT FOR CONSTRUCTION

US Army Corps of Engineers
Sacramento District

Symbol	Description	Date	Approved
08	DESCRIPTION8	DATE8	APPROVAL8
07	DESCRIPTION7	DATE7	APPROVAL7
06	DESCRIPTION6	DATE6	APPROVAL6
05	DESCRIPTION5	DATE5	APPROVAL5
04	DESCRIPTION4	DATE4	APPROVAL4
03	DESCRIPTION3	DATE3	APPROVAL3
02	DESCRIPTION2	DATE2	APPROVAL2
01	DESCRIPTION1	DATE1	APPROVAL1

Designed by: –
Dwn by: –
Spec No.: –
Date: –
Rev: –
Reviewed by: –
Drawing Code: –
Design file no: –
Submitted by: –
File name: $$$$date+$$$$
Plot date:
Plot scale: –
CHIEF, CIV ENGR DES SEC A

DEPARTMENT OF THE ARMY
CORPS OF ENGINEERS
SACRAMENTO, CALIFORNIA

SACRAMENTO DISTRICT
IN-HOUSE DESIGN
1325 "J" STREET
SACRAMENTO, CA 95814-2922

SUTTER & BUTTE COUNTY CALIFORNIA
SUTTER BASIN PILOT FEASIBILITY STUDY
DRAFT REPORT
ALTERNATIVE SB-7 AND SB-8
PLAN VIEW
STA 1125+00 TO 1175+00

Sheet reference number:
C-120

HORIZONTAL DATUM

THE HORIZONTAL DATUM OF THIS SURVEY IS THE NORTH AMERICAN DATUM OF 1983 (NAD83) BEING THE CALIFORNIA COORDINATE SYSTEM OF 1983 ZONE 2 (GRID SURFACE).

0 200 400

DRAWING SCALE

NOT FOR CONSTRUCTION

US Army Corps of Engineers®
Sacramento District

Symbol	Description	Date	Approved
DA	DESCRIPTION8	DATE8	APPROVAL8
DA	DESCRIPTION7	DATE7	APPROVAL7
DA	DESCRIPTION6	DATE6	APPROVAL6
DA	DESCRIPTION5	DATE5	APPROVAL5
DA	DESCRIPTION4	DATE4	APPROVAL4
DA	DESCRIPTION3	DATE3	APPROVAL3
DA	DESCRIPTION2	DATE2	APPROVAL2
DA	DESCRIPTION1	DATE1	APPROVAL1

DEPARTMENT OF THE ARMY
CORPS OF ENGINEERS
SACRAMENTO, CALIFORNIA

SACRAMENTO DISTRICT
IN-HOUSE DESIGN
1325 "J" STREET
SACRAMENTO, CA 95814-2922

Designed by: –		Date: –	Rev: –
Dwn by: –	Spec No.: –	Design file no: –	
Reviewed by: –		Drawing Code: –	
Submitted by: –		File name: $$$$date+$$$$	
CHIEF, CIV ENGR DES SEC A		Plot date:	
		Plot scale: –	

SUTTER & BUTTE COUNTY CALIFORNIA
SUTTER BASIN PILOT FEASIBILITY STUDY
DRAFT REPORT
ALTERNATIVE SB-7 AND SB-8
PLAN VIEW
STA 1175+00 TO 1225+00

Sheet reference number:
C-121

MATCHLINE STATION 1225+00 FOR CONTINUATION SEE SHEET C-121

MATCHLINE STATION 1275+00 FOR CONTINUATION SEE SHEET C-123

HORIZONTAL DATUM

THE HORIZONTAL DATUM OF THIS SURVEY IS THE NORTH AMERICAN DATUM OF 1983 (NAD83) BEING THE CALIFORNIA COORDINATE SYSTEM OF 1983 ZONE 2 (GRID SURFACE).

N

0 200 400

DRAWING SCALE

NOT FOR CONSTRUCTION

US Army Corps of Engineers®
Sacramento District

Symbol	Description	Date	Approved
08	DESCRIPTION8	DATE8	APPROVAL8
07	DESCRIPTION7	DATE7	APPROVAL7
06	DESCRIPTION6	DATE6	APPROVAL6
05	DESCRIPTION5	DATE5	APPROVAL5
04	DESCRIPTION4	DATE4	APPROVAL4
03	DESCRIPTION3	DATE3	APPROVAL3
02	DESCRIPTION2	DATE2	APPROVAL2
01	DESCRIPTION1	DATE1	APPROVAL1

DEPARTMENT OF THE ARMY
CORPS OF ENGINEERS
SACRAMENTO, CALIFORNIA

SACRAMENTO DISTRICT
IN-HOUSE DESIGN
1325 "J" STREET
SACRAMENTO, CA 95814-2922

Designed by: –		Date: –	Rev: –
Dwn by: –	Spec No.: –	Design file no: –	
Reviewed by: –		Drawing Code: –	
Submitted by: –		File name: $$$$date+$$$$	
CHIEF, CIV ENGR DES SEC. A		Plot date: –	
		Plot scale: –	

SUTTER & BUTTE COUNTY CALIFORNIA
SUTTER BASIN PILOT FEASIBILITY STUDY
DRAFT REPORT
ALTERNATIVE SB-7 AND SB-8
PLAN VIEW
STA 1225+00 TO 1275+00

Sheet reference number:
C-122

HORIZONTAL DATUM

THE HORIZONTAL DATUM OF THIS SURVEY IS THE NORTH AMERICAN DATUM OF 1983 (NAD83) BEING THE CALIFORNIA COORDINATE SYSTEM OF 1983 ZONE 2 (GRID SURFACE).

0 200 400
DRAWING SCALE

NOT FOR CONSTRUCTION

US Army Corps of Engineers
Sacramento District

Symbol	Description	Date	Approved
08	DESCRIPTION8	DATE8	APPROVAL8
07	DESCRIPTION7	DATE7	APPROVAL7
06	DESCRIPTION6	DATE6	APPROVAL6
05	DESCRIPTION5	DATE5	APPROVAL5
04	DESCRIPTION4	DATE4	APPROVAL4
03	DESCRIPTION3	DATE3	APPROVAL3
02	DESCRIPTION2	DATE2	APPROVAL2
01	DESCRIPTION1	DATE1	APPROVAL1

DEPARTMENT OF THE ARMY
CORPS OF ENGINEERS
SACRAMENTO, CALIFORNIA

SACRAMENTO DISTRICT
IN-HOUSE DESIGN
1325 "J" STREET
SACRAMENTO, CA 95814-2922

Designed by: –		Date: –	Rev: –
Dwn by: –	Spec No.: –	Design file no: –	
Reviewed by: –		Drawing Code: –	
Submitted by: –		File name: $$$$date$$$$	
CHIEF, CIV ENGR DES SEC. A		Plot date:	
		Plot scale: –	

SUTTER & BUTTE COUNTY CALIFORNIA
SUTTER BASIN PILOT FEASIBILITY STUDY
DRAFT REPORT
ALTERNATIVE SB-7 AND SB-8
PLAN VIEW
STA 1275+00 TO 1325+00

Sheet reference number:
C-123

HORIZONTAL DATUM

THE HORIZONTAL DATUM OF THIS SURVEY IS THE NORTH AMERICAN DATUM OF 1983 (NAD83) BEING THE CALIFORNIA COORDINATE SYSTEM OF 1983 ZONE 2 (GRID SURFACE).

0 200 400
DRAWING SCALE

NOT FOR CONSTRUCTION

US Army Corps of Engineers
Sacramento District

Symbol	Description	Date	Approved
08	DESCRIPTION8	DATE8	APPROVAL8
07	DESCRIPTION7	DATE7	APPROVAL7
06	DESCRIPTION6	DATE6	APPROVAL6
05	DESCRIPTION5	DATE5	APPROVAL5
04	DESCRIPTION4	DATE4	APPROVAL4
03	DESCRIPTION3	DATE3	APPROVAL3
02	DESCRIPTION2	DATE2	APPROVAL2
01	DESCRIPTION1	DATE1	APPROVAL1

DEPARTMENT OF THE ARMY
CORPS OF ENGINEERS
SACRAMENTO, CALIFORNIA

SACRAMENTO DISTRICT
IN-HOUSE DESIGN
1325 "J" STREET
SACRAMENTO, CA 95814-2922

Designed by: –
Dwn by: –
Spec No.: –
Reviewed by: –
Submitted by: –
CHIEF, CIV ENGR DES SEC A
Date: –
Design file no: –
Drawing Code: –
File name: –
Plot date: $$$$date$$$$
Plot scale: –
Rev. –

SUTTER & BUTTE COUNTY CALIFORNIA
SUTTER BASIN PILOT FEASIBILITY STUDY
DRAFT REPORT
ALTERNATIVE SB-7 AND SB-8
PLAN VIEW
STA 1325+00 TO 1375+00

Sheet reference number:
C-124

HORIZONTAL DATUM

THE HORIZONTAL DATUM OF THIS SURVEY IS THE NORTH AMERICAN DATUM OF 1983 (NAD83) BEING THE CALIFORNIA COORDINATE SYSTEM OF 1983 ZONE 2 (GRID SURFACE).

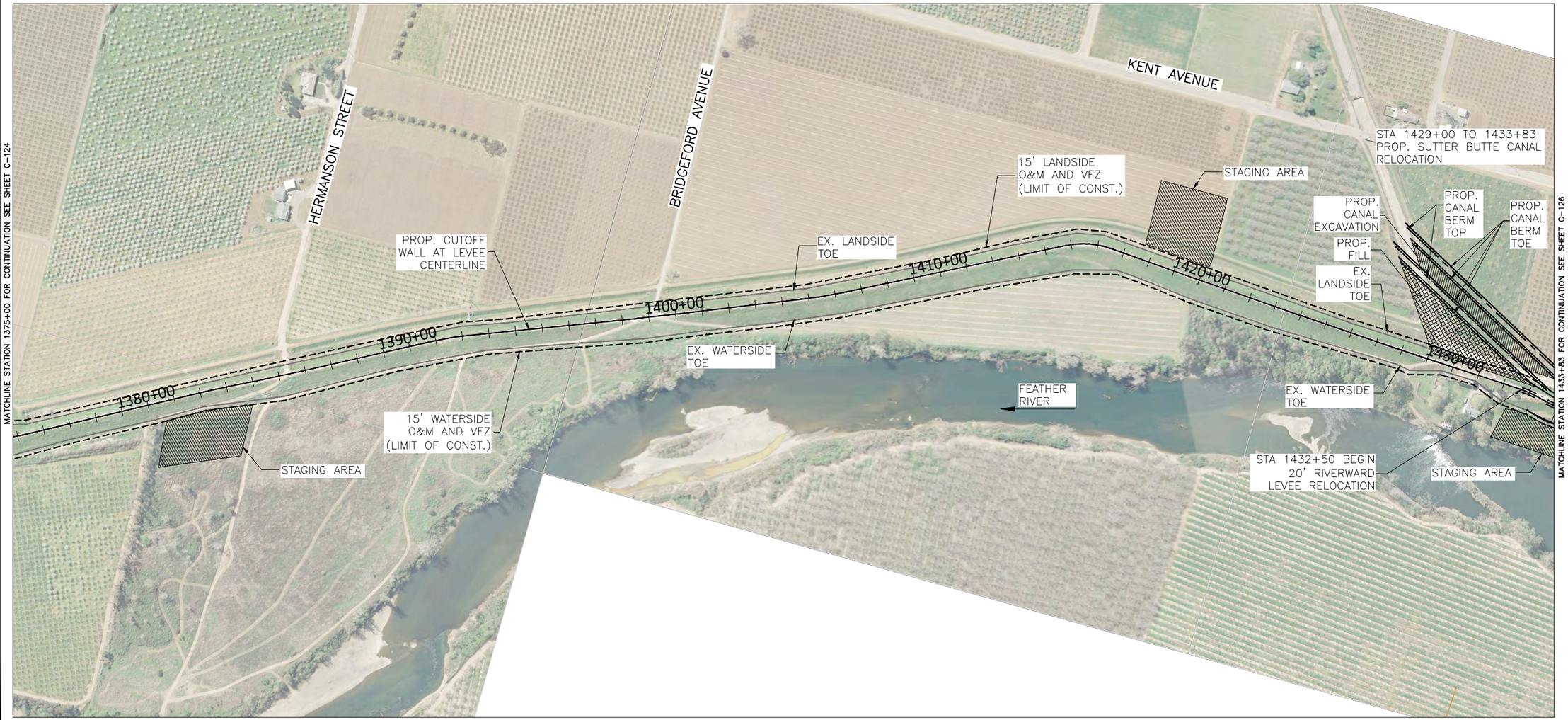

0 200 400
DRAWING SCALE

NOT FOR CONSTRUCTION

US Army Corps of Engineers
Sacramento District

Symbol	Description	Date	Approved
08	DESCRIPTION8	DATE8	APPROVAL8
07	DESCRIPTION7	DATE7	APPROVAL7
06	DESCRIPTION6	DATE6	APPROVAL6
05	DESCRIPTION5	DATE5	APPROVAL5
04	DESCRIPTION4	DATE4	APPROVAL4
03	DESCRIPTION3	DATE3	APPROVAL3
02	DESCRIPTION2	DATE2	APPROVAL2
01	DESCRIPTION1	DATE1	APPROVAL1

DEPARTMENT OF THE ARMY
CORPS OF ENGINEERS
SACRAMENTO, CALIFORNIA

SACRAMENTO DISTRICT
IN-HOUSE DESIGN
1325 "J" STREET
SACRAMENTO, CA 95814-2922

Designed by: –
Dwn by: –
Spec No.: –
Reviewed by: –
Submitted by: –
CHIEF, CIV ENGR DES SEC A
Date: –
Design file no: –
Drawing Code: –
File name: –
Plot date: $$$$date+$$$$
Plot scale: –
Rev. –

SUTTER & BUTTE COUNTY CALIFORNIA
SUTTER BASIN PILOT FEASIBILITY STUDY
DRAFT REPORT
ALTERNATIVE SB-7 AND SB-8
PLAN VIEW
STA 1375+00 TO 1433+83

Sheet reference number:
C-125

HORIZONTAL DATUM

THE HORIZONTAL DATUM OF THIS SURVEY IS THE NORTH AMERICAN DATUM OF 1983 (NAD83) BEING THE CALIFORNIA COORDINATE SYSTEM OF 1983 ZONE 2 (GRID SURFACE).

N

0 200 400
DRAWING SCALE

NOT FOR CONSTRUCTION

US Army Corps of Engineers
Sacramento District

Symbol	Description	Date	Approved
08	DESCRIPTION8	DATE8	APPROVAL8
07	DESCRIPTION7	DATE7	APPROVAL7
06	DESCRIPTION6	DATE6	APPROVAL6
05	DESCRIPTION5	DATE5	APPROVAL5
04	DESCRIPTION4	DATE4	APPROVAL4
03	DESCRIPTION3	DATE3	APPROVAL3
02	DESCRIPTION2	DATE2	APPROVAL2
01	DESCRIPTION1	DATE1	APPROVAL1

Designed by: –
Dwn by: –
Reviewed by: –
Submitted by: –
Date: –
Spec No.: –
Design file no: –
Drawing Code: –
File name: –
Plot date: $$$$date$$$$
Plot scale: –
CWBIT_OV EWOR DDS SEC A

DEPARTMENT OF THE ARMY
CORPS OF ENGINEERS
SACRAMENTO, CALIFORNIA

SACRAMENTO DISTRICT
IN-HOUSE DESIGN
1325 "J" STREET
SACRAMENTO, CA 95814-2922

SUTTER & BUTTE COUNTY CALIFORNIA
SUTTER BASIN PILOT FEASIBILITY STUDY
DRAFT REPORT
ALTERNATIVE SB-8
PLAN VIEW
STA 1433+83 TO 1475+00

Sheet reference number:
C-126

HORIZONTAL DATUM

THE HORIZONTAL DATUM OF THIS SURVEY IS THE NORTH AMERICAN DATUM OF 1983 (NAD83) BEING THE CALIFORNIA COORDINATE SYSTEM OF 1983 ZONE 2 (GRID SURFACE).

N

0 200 400

DRAWING SCALE

NOT FOR CONSTRUCTION

US Army Corps of Engineers®
Sacramento District

Symbol	Description	Date	Approved
DA	DESCRIPTION8	DATE8	APPROVAL8
DA	DESCRIPTION7	DATE7	APPROVAL7
DA	DESCRIPTION6	DATE6	APPROVAL6
DA	DESCRIPTION5	DATE5	APPROVAL5
DA	DESCRIPTION4	DATE4	APPROVAL4
DA	DESCRIPTION3	DATE3	APPROVAL3
DA	DESCRIPTION2	DATE2	APPROVAL2
DA	DESCRIPTION1	DATE1	APPROVAL1

Designed by: – Date: – Rev. –
Dwn by: – Spec No.: – Design file no: –
Reviewed by: – Drawing Code: –
Submitted by: – File name: $$$$date+$$$$
Plot date:
CHIEF, CIV ENGR DES SEC A Plot scale: –

DEPARTMENT OF THE ARMY
CORPS OF ENGINEERS
SACRAMENTO, CALIFORNIA

SACRAMENTO DISTRICT
IN-HOUSE DESIGN
1325 'J' STREET
SACRAMENTO, CA 95814-2922

SUTTER & BUTTE COUNTY CALIFORNIA
SUTTER BASIN PILOT FEASIBILITY STUDY
DRAFT REPORT
ALTERNATIVE SB-8
PLAN VIEW
STA 1475+00 TO 1525+00

Sheet reference number:
C-127

HORIZONTAL DATUM

THE HORIZONTAL DATUM OF THIS SURVEY IS THE NORTH AMERICAN DATUM OF 1983 (NAD83) BEING THE CALIFORNIA COORDINATE SYSTEM OF 1983 ZONE 2 (GRID SURFACE).

N

MATCHLINE STATION 1525+00 FOR CONTINUATION SEE SHEET C-127

MATCHLINE STATION 1575+00 FOR CONTINUATION SEE SHEET C-129

0 200 400
DRAWING SCALE

NOT FOR CONSTRUCTION

US Army Corps of Engineers
Sacramento District

Symbol	Description	Date	Approved
0A	DESCRIPTION8	DATE8	APPROVAL8
0A	DESCRIPTION7	DATE7	APPROVAL7
0A	DESCRIPTION6	DATE6	APPROVAL6
0A	DESCRIPTION5	DATE5	APPROVAL5
0A	DESCRIPTION4	DATE4	APPROVAL4
0A	DESCRIPTION3	DATE3	APPROVAL3
0A	DESCRIPTION2	DATE2	APPROVAL2
0A	DESCRIPTION1	DATE1	APPROVAL1

DEPARTMENT OF THE ARMY
CORPS OF ENGINEERS
SACRAMENTO, CALIFORNIA

SACRAMENTO DISTRICT
IN-HOUSE DESIGN
1325 "J" STREET
SACRAMENTO, CA 95814-2922

Designed by: –		Date: –	Rev. –
Dwn by: –	Spec No.: –	Design file no: –	
Reviewed by: –		Drawing Code: –	
Submitted by: –		File name: Plot date: $$$$date+$$$$ Plot scale: –	

CHIEF, CIV ENGR DES SEC A

SUTTER & BUTTE COUNTY CALIFORNIA
SUTTER BASIN PILOT FEASIBILITY STUDY
DRAFT REPORT
ALTERNATIVE SB-8
PLAN VIEW
STA 1525+00 TO 1575+00

Sheet reference number:
C-128

HORIZONTAL DATUM

THE HORIZONTAL DATUM OF THIS SURVEY IS THE NORTH AMERICAN DATUM OF 1983 (NAD83) BEING THE CALIFORNIA COORDINATE SYSTEM OF 1983 ZONE 2 (GRID SURFACE).

N

0 200 400
DRAWING SCALE

NOT FOR CONSTRUCTION

US Army Corps of Engineers
Sacramento District

Symbol	Description	Date	Approved
0A	DESCRIPTION8	DATE8	APPROVAL8
0A	DESCRIPTION7	DATE7	APPROVAL7
0A	DESCRIPTION6	DATE6	APPROVAL6
0A	DESCRIPTION5	DATE5	APPROVAL5
0A	DESCRIPTION4	DATE4	APPROVAL4
0A	DESCRIPTION3	DATE3	APPROVAL3
0A	DESCRIPTION2	DATE2	APPROVAL2
0A	DESCRIPTION1	DATE1	APPROVAL1

DEPARTMENT OF THE ARMY
CORPS OF ENGINEERS
SACRAMENTO, CALIFORNIA

SACRAMENTO DISTRICT
IN-HOUSE DESIGN
1325 "J" STREET
SACRAMENTO, CA 95814-2922

Designed by: –		Date: –	Rev: –
Dwn by: –	Spec No.: –	Design file no: –	
Reviewed by: –		Drawing Code: –	
Submitted by: – CHIEF, CIV ENGR DES SEC A		File name: $$$$date+$$$$ Plot date: Plot scale: –	

SUTTER & BUTTE COUNTY CALIFORNIA
SUTTER BASIN PILOT FEASIBILITY STUDY
DRAFT REPORT
ALTERNATIVE SB-8
PLAN VIEW
STA 1575+00 TO 1625+00

Sheet reference number:
C-129

HORIZONTAL DATUM

THE HORIZONTAL DATUM OF THIS SURVEY IS THE NORTH AMERICAN DATUM OF 1983 (NAD83) BEING THE CALIFORNIA COORDINATE SYSTEM OF 1983 ZONE 2 (GRID SURFACE).

N

0 200 400

DRAWING SCALE

NOT FOR CONSTRUCTION

US Army Corps of Engineers®
Sacramento District

Symbol	Description	Date	Approved
08	DESCRIPTION8	DATE8	APPROVAL8
07	DESCRIPTION7	DATE7	APPROVAL7
06	DESCRIPTION6	DATE6	APPROVAL6
05	DESCRIPTION5	DATE5	APPROVAL5
04	DESCRIPTION4	DATE4	APPROVAL4
03	DESCRIPTION3	DATE3	APPROVAL3
02	DESCRIPTION2	DATE2	APPROVAL2
01	DESCRIPTION1	DATE1	APPROVAL1

Designed by: – Date: – Rev: –
Dwn by: – Spec No.: – Design file no: –
Reviewed by: – Drawing Code: –
Submitted by: – File name: $$$$date+$$$$ Plot date: Plot scale: –
CHIEF, CIV ENGR DES SEC A

DEPARTMENT OF THE ARMY
CORPS OF ENGINEERS
SACRAMENTO, CALIFORNIA

SACRAMENTO DISTRICT
IN-HOUSE DESIGN
1325 "J" STREET
SACRAMENTO, CA 95814-2922

SUTTER & BUTTE COUNTY CALIFORNIA
SUTTER BASIN PILOT FEASIBILITY STUDY
DRAFT REPORT
ALTERNATIVE SB-8
PLAN VIEW
STA 1625+00 TO 1675+00

Sheet reference number:
C-130

HORIZONTAL DATUM

THE HORIZONTAL DATUM OF THIS SURVEY IS THE NORTH AMERICAN DATUM OF 1983 (NAD83) BEING THE CALIFORNIA COORDINATE SYSTEM OF 1983 ZONE 2 (GRID SURFACE).

N

0 200 400
DRAWING SCALE

NOT FOR CONSTRUCTION

US Army Corps of Engineers
Sacramento District

Symbol	Description	Date	Approved
0	DESCRIPTION1	DATE1	APPROVAL1
1	DESCRIPTION2	DATE2	APPROVAL2
2	DESCRIPTION3	DATE3	APPROVAL3
3	DESCRIPTION4	DATE4	APPROVAL4
4	DESCRIPTION5	DATE5	APPROVAL5
5	DESCRIPTION6	DATE6	APPROVAL6
6	DESCRIPTION7	DATE7	APPROVAL7
7	DESCRIPTION8	DATE8	APPROVAL8

Designed by: –
Dwn by: –
Spec No.: –
Date: –
Rev: –
Reviewed by: –
Drawing Code: –
Submitted by: –
Design file no: –
File name: $$$$date+$$$$
Plot date:
Plot scale: –
CHIEF, CIV ENGR DES SEC. A

DEPARTMENT OF THE ARMY
CORPS OF ENGINEERS
SACRAMENTO, CALIFORNIA

SACRAMENTO DISTRICT
IN-HOUSE DESIGN
1325 "J" STREET
SACRAMENTO, CA 95814-2922

SUTTER & BUTTE COUNTY CALIFORNIA
SUTTER BASIN PILOT FEASIBILITY STUDY
DRAFT REPORT
ALTERNATIVE SB-8
PLAN VIEW
STA 1675+00 TO 1725+00

Sheet reference number:
C-131

HORIZONTAL DATUM

THE HORIZONTAL DATUM OF THIS SURVEY IS THE NORTH AMERICAN DATUM OF 1983 (NAD83) BEING THE CALIFORNIA COORDINATE SYSTEM OF 1983 ZONE 2 (GRID SURFACE).

N

0 200 400
DRAWING SCALE

NOT FOR CONSTRUCTION

US Army Corps of Engineers
Sacramento District

Symbol	Description	Date	Approved
08	DESCRIPTION8	DATE8	APPROVAL8
07	DESCRIPTION7	DATE7	APPROVAL7
06	DESCRIPTION6	DATE6	APPROVAL6
05	DESCRIPTION5	DATE5	APPROVAL5
04	DESCRIPTION4	DATE4	APPROVAL4
03	DESCRIPTION3	DATE3	APPROVAL3
02	DESCRIPTION2	DATE2	APPROVAL2
01	DESCRIPTION1	DATE1	APPROVAL1

DEPARTMENT OF THE ARMY
CORPS OF ENGINEERS
SACRAMENTO, CALIFORNIA

SACRAMENTO DISTRICT
IN-HOUSE DESIGN
1325 "J" STREET
SACRAMENTO, CA 95814-2922

Designed by: –		Date: –	Rev. –
Dwn by: –	Spec No.: –	Design file no: –	
Reviewed by: –		Drawing Code: –	
Submitted by: –		File name: $$$$date$$$$	
CHIEF, DIV ENGR SCS SEC. A		Plot date:	
		Plot scale: –	

SUTTER & BUTTE COUNTY CALIFORNIA
SUTTER BASIN PILOT FEASIBILITY STUDY
DRAFT REPORT
ALTERNATIVE SB-8
PLAN VIEW
STA 1725+00 TO 1775+00

Sheet reference number:
C-132

HORIZONTAL DATUM

THE HORIZONTAL DATUM OF THIS SURVEY IS THE NORTH AMERICAN DATUM OF 1983 (NAD83) BEING THE CALIFORNIA COORDINATE SYSTEM OF 1983 ZONE 2 (GRID SURFACE).

N

MATCHLINE STATION 1775+00 FOR CONTINUATION SEE SHEET C-132

MATCHLINE STATION 1825+00 FOR CONTINUATION SEE SHEET C-134

0 200 400
DRAWING SCALE

NOT FOR CONSTRUCTION

US Army Corps of Engineers
Sacramento District

Symbol	Description	Date	Approved
08	DESCRIPTION8	DATE8	APPROVAL8
07	DESCRIPTION7	DATE7	APPROVAL7
06	DESCRIPTION6	DATE6	APPROVAL6
05	DESCRIPTION5	DATE5	APPROVAL5
04	DESCRIPTION4	DATE4	APPROVAL4
03	DESCRIPTION3	DATE3	APPROVAL3
02	DESCRIPTION2	DATE2	APPROVAL2
01	DESCRIPTION1	DATE1	APPROVAL1

DEPARTMENT OF THE ARMY
CORPS OF ENGINEERS
SACRAMENTO, CALIFORNIA

SACRAMENTO DISTRICT
IN-HOUSE DESIGN
1325 "J" STREET
SACRAMENTO, CA 95814-2922

Designed by: –		Date: –	Rev. –
Dwn by: –	Spec No.: –	Design file no: –	
Reviewed by: –		Drawing Code: –	
Submitted by: –		File name: $$$$date+$$$$	
CWPD, CIV DWGS DES SEC A		Plot date:	
		Plot scale: -	

SUTTER & BUTTE COUNTY CALIFORNIA
SUTTER BASIN PILOT FEASIBILITY STUDY
DRAFT REPORT
ALTERNATIVE SB-8
PLAN VIEW
STA 1775+00 TO 1825+00

Sheet reference number:
C-133

MATCHLINE STATION 1825+00 FOR CONTINUATION SEE SHEET C-133

MATCHLINE STATION 1875+00 FOR CONTINUATION SEE SHEET C-135

HORIZONTAL DATUM

THE HORIZONTAL DATUM OF THIS SURVEY IS THE NORTH AMERICAN DATUM OF 1983 (NAD83) BEING THE CALIFORNIA COORDINATE SYSTEM OF 1983 ZONE 2 (GRID SURFACE).

N

0 200 400
DRAWING SCALE

NOT FOR CONSTRUCTION

US Army Corps of Engineers
Sacramento District

Symbol	Description	Date	Approved
08	DESCRIPTION8	DATE8	APPROVAL8
07	DESCRIPTION7	DATE7	APPROVAL7
06	DESCRIPTION6	DATE6	APPROVAL6
05	DESCRIPTION5	DATE5	APPROVAL5
04	DESCRIPTION4	DATE4	APPROVAL4
03	DESCRIPTION3	DATE3	APPROVAL3
02	DESCRIPTION2	DATE2	APPROVAL2
01	DESCRIPTION1	DATE1	APPROVAL1

DEPARTMENT OF THE ARMY
CORPS OF ENGINEERS
SACRAMENTO, CALIFORNIA

SACRAMENTO DISTRICT
IN-HOUSE DESIGN
1325 "J" STREET
SACRAMENTO, CA 95814-2922

Designed by: –
Dwn by: –
Spec No.: –
Reviewed by: –
Submitted by: –
CHIEF, DIV ENGR DES SEC A

Date: –
Design file no: –
Drawing Code: –
File name: –
Plot date: $$$$date+$$$$
Plot scale: –

Rev. –

SUTTER & BUTTE COUNTY CALIFORNIA
SUTTER BASIN PILOT FEASIBILITY STUDY
DRAFT REPORT
ALTERNATIVE SB-8
PLAN VIEW
STA 1825+00 TO 1875+00

Sheet reference number:
C-134

HORIZONTAL DATUM

THE HORIZONTAL DATUM OF THIS SURVEY IS THE NORTH AMERICAN DATUM OF 1983 (NAD83) BEING THE CALIFORNIA COORDINATE SYSTEM OF 1983 ZONE 2 (GRID SURFACE).

0 200 400
DRAWING SCALE

NOT FOR CONSTRUCTION

US Army Corps of Engineers
Sacramento District

Symbol	Description	Date	Approved
8	DESCRIPTION8	DATE8	APPROVAL8
7	DESCRIPTION7	DATE7	APPROVAL7
6	DESCRIPTION6	DATE6	APPROVAL6
5	DESCRIPTION5	DATE5	APPROVAL5
4	DESCRIPTION4	DATE4	APPROVAL4
3	DESCRIPTION3	DATE3	APPROVAL3
2	DESCRIPTION2	DATE2	APPROVAL2
1	DESCRIPTION1	DATE1	APPROVAL1

DEPARTMENT OF THE ARMY
CORPS OF ENGINEERS
SACRAMENTO, CALIFORNIA

SACRAMENTO DISTRICT
IN-HOUSE DESIGN
1325 "J" STREET
SACRAMENTO, CA 95814-2922

Designed by: –		Date: –	Rev: –
Dwn by: –	Spec No.: –	Design file no: –	
Reviewed by: –		Drawing Code: –	
Submitted by: –		File name: $$$$date$$$$	
CHIEF, CIV ENGR DES SEC A		Plot date:	
		Plot scale: –	

SUTTER & BUTTE COUNTY CALIFORNIA
SUTTER BASIN PILOT FEASIBILITY STUDY
DRAFT REPORT
ALTERNATIVE SB-8
PLAN VIEW
STA 1875+00 TO 1925+00

Sheet reference number:
C-135

HORIZONTAL DATUM

THE HORIZONTAL DATUM OF THIS SURVEY IS THE NORTH AMERICAN DATUM OF 1983 (NAD83) BEING THE CALIFORNIA COORDINATE SYSTEM OF 1983 ZONE 2 (GRID SURFACE).

N

0 200 400
DRAWING SCALE

NOT FOR CONSTRUCTION

US Army Corps of Engineers
Sacramento District

Symbol	Description	Date	Approved
0A	DESCRIPTION8	DATE8	APPROVAL8
0A	DESCRIPTION7	DATE7	APPROVAL7
0A	DESCRIPTION6	DATE6	APPROVAL6
0A	DESCRIPTION5	DATE5	APPROVAL5
0A	DESCRIPTION4	DATE4	APPROVAL4
0A	DESCRIPTION3	DATE3	APPROVAL3
0A	DESCRIPTION2	DATE2	APPROVAL2
0A	DESCRIPTION1	DATE1	APPROVAL1

Designed by: –
Dwn by: –
Spec No.: –
Reviewed by: –
Submitted by: –
CHIEF, CIV ENGR DES SEC A
Date: –
Rev: –
Design file no: –
Drawing Code: –
File name: $$$$date+$$$$
Plot date:
Plot scale: –

DEPARTMENT OF THE ARMY
CORPS OF ENGINEERS
SACRAMENTO, CALIFORNIA

SACRAMENTO DISTRICT
IN-HOUSE DESIGN
1325 "J" STREET
SACRAMENTO, CA 95814-2922

SUTTER & BUTTE COUNTY CALIFORNIA
SUTTER BASIN PILOT FEASIBILITY STUDY
DRAFT REPORT
ALTERNATIVE SB-8
PLAN VIEW
STA 1925+00 TO 1975+00

Sheet reference number:
C-136

HORIZONTAL DATUM

THE HORIZONTAL DATUM OF THIS SURVEY IS THE NORTH AMERICAN DATUM OF 1983 (NAD83) BEING THE CALIFORNIA COORDINATE SYSTEM OF 1983 ZONE 2 (GRID SURFACE).

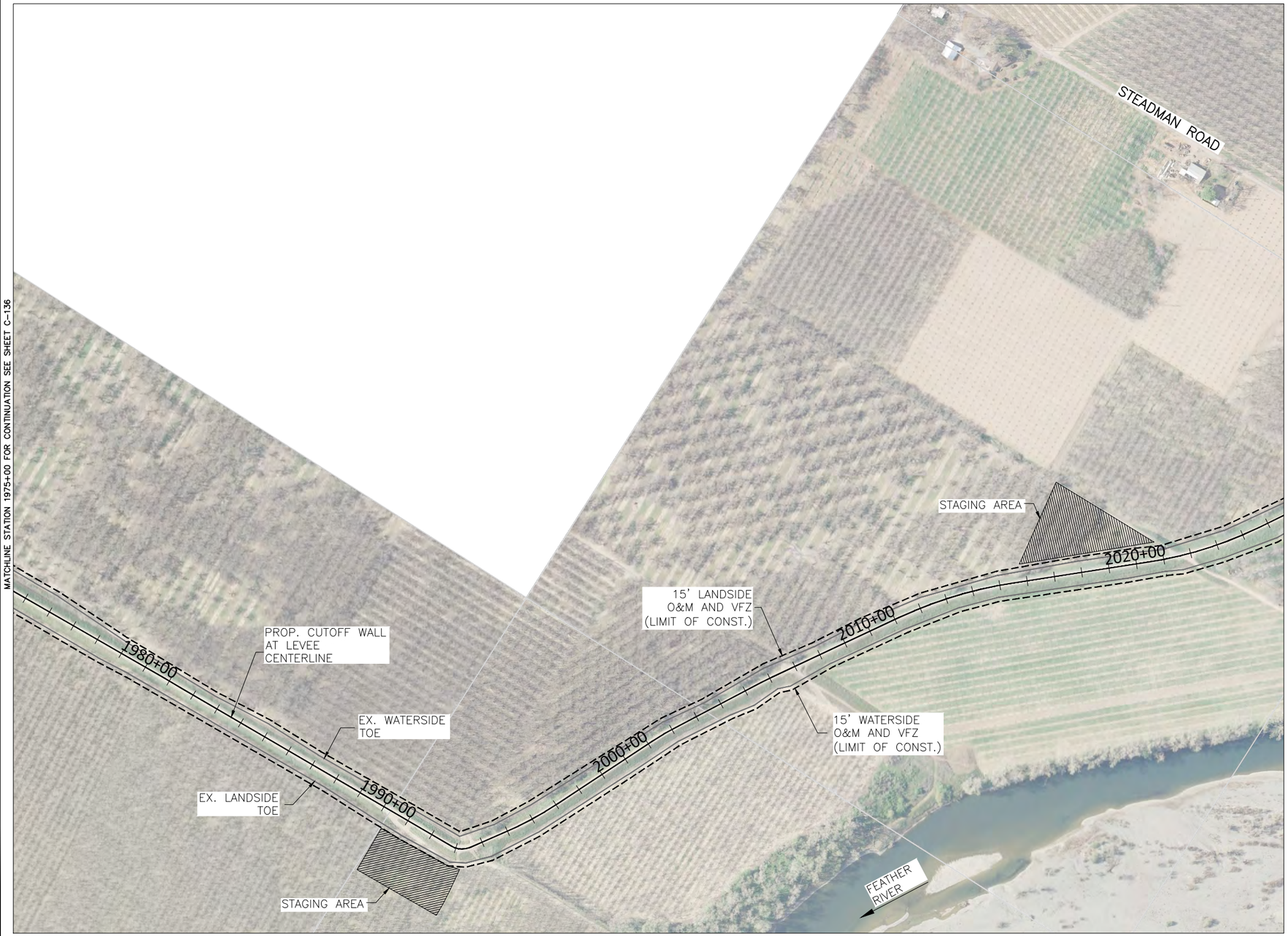

0 200 400
DRAWING SCALE

NOT FOR CONSTRUCTION

US Army Corps of Engineers
Sacramento District

Symbol	Description	Date	Approved
8	DESCRIPTION8	DATE8	APPROVAL8
7	DESCRIPTION7	DATE7	APPROVAL7
6	DESCRIPTION6	DATE6	APPROVAL6
5	DESCRIPTION5	DATE5	APPROVAL5
4	DESCRIPTION4	DATE4	APPROVAL4
3	DESCRIPTION3	DATE3	APPROVAL3
2	DESCRIPTION2	DATE2	APPROVAL2
1	DESCRIPTION1	DATE1	APPROVAL1

DEPARTMENT OF THE ARMY
CORPS OF ENGINEERS
SACRAMENTO, CALIFORNIA

SACRAMENTO DISTRICT
IN-HOUSE DESIGN
1325 "J" STREET
SACRAMENTO, CA 95814-2922

Designed by: –	Date: –	Rev: –
Dwn by: –	Spec No.: –	Design file no: –
Reviewed by: –		Drawing Code: –
Submitted by: –		File name: $$$$date+$$$$
CHIEF, CIV ENGR DES SEC. A		Plot date: Plot scale: -

SUTTER & BUTTE COUNTY CALIFORNIA
SUTTER BASIN PILOT FEASIBILITY STUDY
DRAFT REPORT
ALTERNATIVE SB-8
PLAN VIEW
STA 1975+00 TO 2025+00

Sheet reference number:
C-137

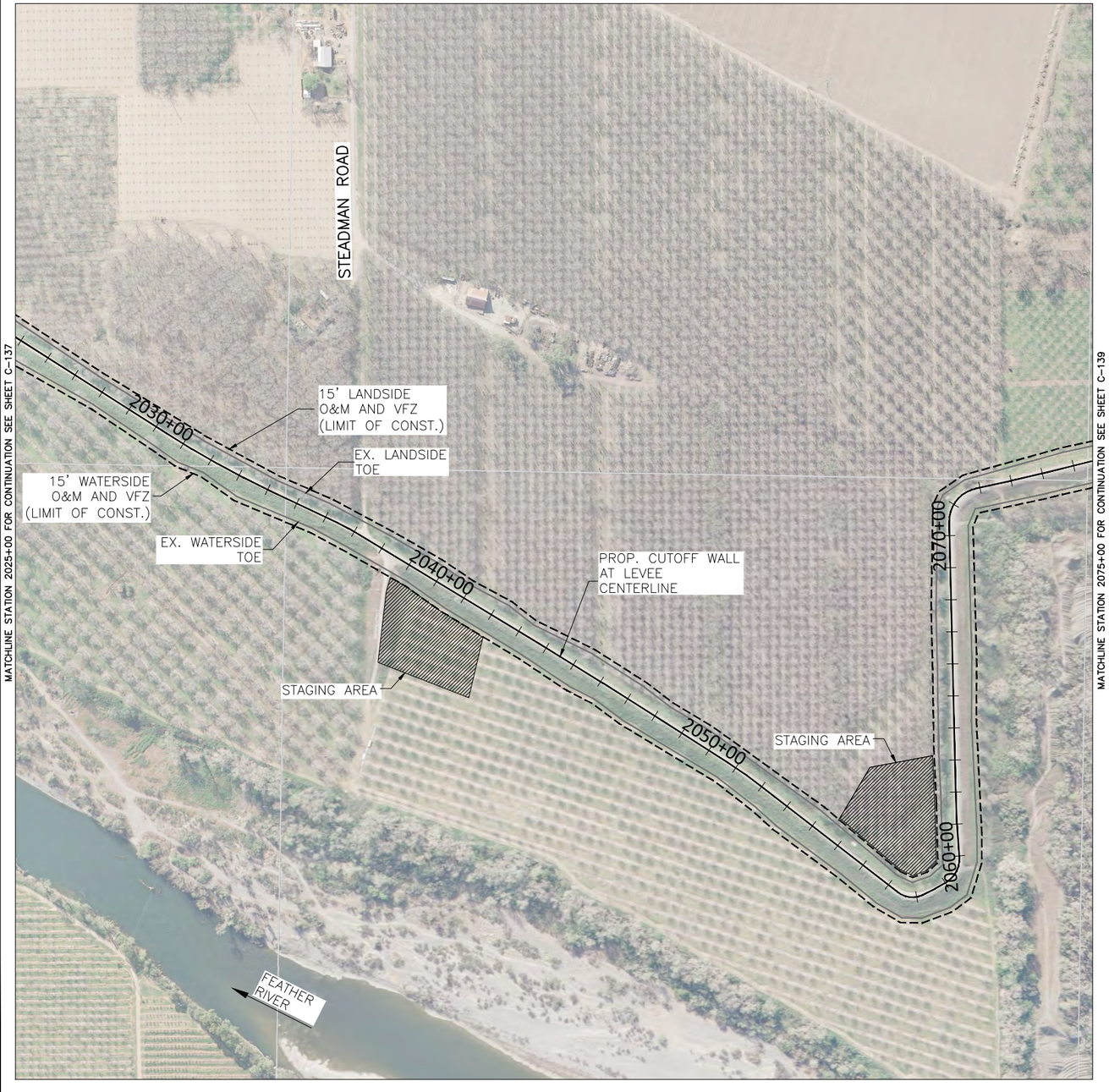

HORIZONTAL DATUM

THE HORIZONTAL DATUM OF THIS SURVEY IS THE NORTH AMERICAN DATUM OF 1983 (NAD83) BEING THE CALIFORNIA COORDINATE SYSTEM OF 1983 ZONE 2 (GRID SURFACE).

N

0 200 400
DRAWING SCALE

NOT FOR CONSTRUCTION

US Army Corps of Engineers
Sacramento District

Symbol	Description	Date	Approved
08	DESCRIPTION8	DATE8	APPROVAL8
07	DESCRIPTION7	DATE7	APPROVAL7
06	DESCRIPTION6	DATE6	APPROVAL6
05	DESCRIPTION5	DATE5	APPROVAL5
04	DESCRIPTION4	DATE4	APPROVAL4
03	DESCRIPTION3	DATE3	APPROVAL3
02	DESCRIPTION2	DATE2	APPROVAL2
01	DESCRIPTION1	DATE1	APPROVAL1

DEPARTMENT OF THE ARMY
CORPS OF ENGINEERS
SACRAMENTO, CALIFORNIA

SACRAMENTO DISTRICT
IN-HOUSE DESIGN
1325 "J" STREET
SACRAMENTO, CA 95814-2922

Designed by: –		Date: –	Rev: –
Dwn by: –	Spec No.: –	Design file no: –	
Reviewed by: –		Drawing Code: –	
Submitted by: –		File name:	
CHIEF, CIV ENGR DES SEC. A		Plot date: $$$$date+$$$$	
		Plot scale: –	

SUTTER & BUTTE COUNTY CALIFORNIA
SUTTER BASIN PILOT FEASIBILITY STUDY
DRAFT REPORT
ALTERNATIVE SB-8
PLAN VIEW
STA 2025+00 TO 2075+00

Sheet reference number:
C-138

HORIZONTAL DATUM

THE HORIZONTAL DATUM OF THIS SURVEY IS THE NORTH AMERICAN DATUM OF 1983 (NAD83) BEING THE CALIFORNIA COORDINATE SYSTEM OF 1983 ZONE 2 (GRID SURFACE).

N

0 200 400

DRAWING SCALE

NOT FOR CONSTRUCTION

US Army Corps of Engineers
Sacramento District

Symbol	Description	Date	Approved
08	DESCRIPTION8	DATE8	APPROVAL8
07	DESCRIPTION7	DATE7	APPROVAL7
06	DESCRIPTION6	DATE6	APPROVAL6
05	DESCRIPTION5	DATE5	APPROVAL5
04	DESCRIPTION4	DATE4	APPROVAL4
03	DESCRIPTION3	DATE3	APPROVAL3
02	DESCRIPTION2	DATE2	APPROVAL2
01	DESCRIPTION1	DATE1	APPROVAL1

DEPARTMENT OF THE ARMY
CORPS OF ENGINEERS
SACRAMENTO, CALIFORNIA

SACRAMENTO DISTRICT
IN-HOUSE DESIGN
1325 "J" STREET
SACRAMENTO, CA 95814-2922

Designed by: –		Date: –	Rev: –
Dwn by: –	Spec No.: –	Design file no: –	
Reviewed by: –		Drawing Code: –	
Submitted by: –		File name: –	
CHIEF, CIV ENGR DES SEC A		Plot date: $$$$date$$$$	
		Plot scale: –	

SUTTER & BUTTE COUNTY CALIFORNIA
SUTTER BASIN PILOT FEASIBILITY STUDY
DRAFT REPORT
ALTERNATIVE SB-8
PLAN VIEW
STA 2075+00 TO 2125+00

Sheet reference number:
C-139

MATCHLINE STATION 2125+00 FOR CONTINUATION SEE SHEET C-139

MATCHLINE STATION 2175+00 FOR CONTINUATION SEE SHEET C-141

HORIZONTAL DATUM

THE HORIZONTAL DATUM OF THIS SURVEY IS THE NORTH AMERICAN DATUM OF 1983 (NAD83) BEING THE CALIFORNIA COORDINATE SYSTEM OF 1983 ZONE 2 (GRID SURFACE).

N

0 200 400
DRAWING SCALE

NOT FOR CONSTRUCTION

US Army Corps of Engineers
Sacramento District

Symbol	Description	Date	Approved
18	DESCRIPTION18	DATE18	APPROVAL18
17	DESCRIPTION17	DATE17	APPROVAL17
16	DESCRIPTION16	DATE16	APPROVAL16
15	DESCRIPTION15	DATE15	APPROVAL15
14	DESCRIPTION14	DATE14	APPROVAL14
13	DESCRIPTION13	DATE13	APPROVAL13
12	DESCRIPTION12	DATE12	APPROVAL12
11	DESCRIPTION11	DATE11	APPROVAL11

DEPARTMENT OF THE ARMY
CORPS OF ENGINEERS
SACRAMENTO, CALIFORNIA

SACRAMENTO DISTRICT
IN-HOUSE DESIGN
1325 "J" STREET
SACRAMENTO, CA 95814-2922

Designed by: –		Date: –	Rev: –
Dwn by: –	Spec No.: –	Design file no: –	
Reviewed by: –		Drawing Code: –	
Submitted by: – CHIEF, CIV ENGR DES SEC A		File name: Plot date: $$$$date+$$$$ Plot scale: –	

SUTTER & BUTTE COUNTY CALIFORNIA
SUTTER BASIN PILOT FEASIBILITY STUDY
DRAFT REPORT
ALTERNATIVE SB-8
PLAN VIEW
STA 2125+00 TO 2175+00

Sheet reference number:
C-140

HORIZONTAL DATUM

THE HORIZONTAL DATUM OF THIS SURVEY IS THE NORTH AMERICAN DATUM OF 1983 (NAD83) BEING THE CALIFORNIA COORDINATE SYSTEM OF 1983 ZONE 2 (GRID SURFACE).

N

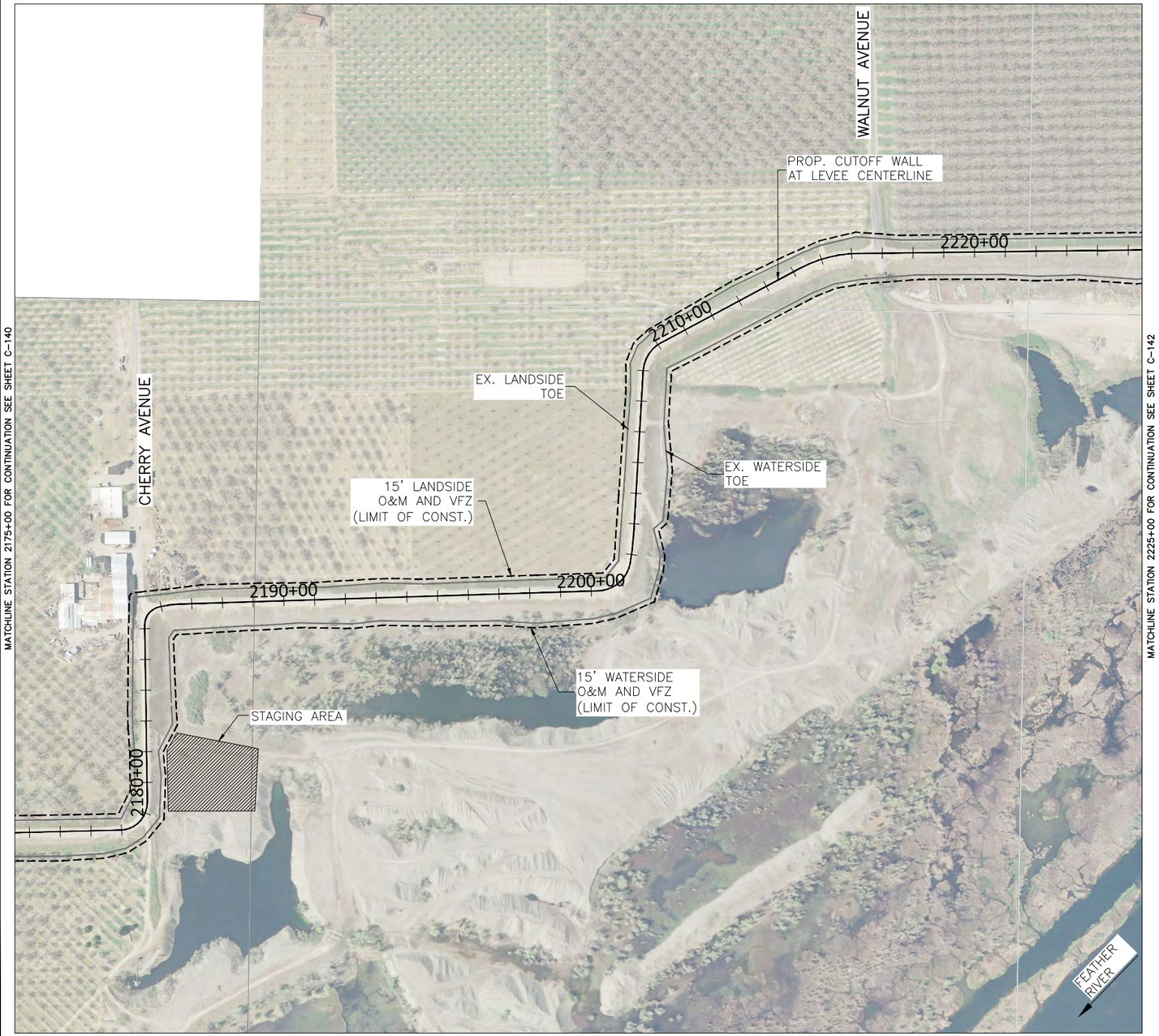

0 200 400
DRAWING SCALE

NOT FOR CONSTRUCTION

US Army Corps of Engineers
Sacramento District

Symbol	Description	Date	Approved
8	DESCRIPTION8	DATE8	APPROVAL8
7	DESCRIPTION7	DATE7	APPROVAL7
6	DESCRIPTION6	DATE6	APPROVAL6
5	DESCRIPTION5	DATE5	APPROVAL5
4	DESCRIPTION4	DATE4	APPROVAL4
3	DESCRIPTION3	DATE3	APPROVAL3
2	DESCRIPTION2	DATE2	APPROVAL2
1	DESCRIPTION1	DATE1	APPROVAL1

DEPARTMENT OF THE ARMY
CORPS OF ENGINEERS
SACRAMENTO, CALIFORNIA

SACRAMENTO DISTRICT
IN-HOUSE DESIGN
1325 "J" STREET
SACRAMENTO, CA 95814-2922

Designed by: –		Date: –	Rev: –
Dwn by: –	Spec No.: –	Design file no: –	
Reviewed by: –		Drawing Code: –	
Submitted by: –		File name:	
		Plot date:	$$$$date+$$$$
CHIEF, CIV ENGR DES SEC A		Plot scale:	–

SUTTER & BUTTE COUNTY CALIFORNIA
SUTTER BASIN PILOT FEASIBILITY STUDY
DRAFT REPORT
ALTERNATIVE SB-8
PLAN VIEW
STA 2175+00 TO 2225+00

Sheet reference number:
C-141

HORIZONTAL DATUM

THE HORIZONTAL DATUM OF THIS SURVEY IS THE NORTH AMERICAN DATUM OF 1983 (NAD83) BEING THE CALIFORNIA COORDINATE SYSTEM OF 1983 ZONE 2 (GRID SURFACE).

N

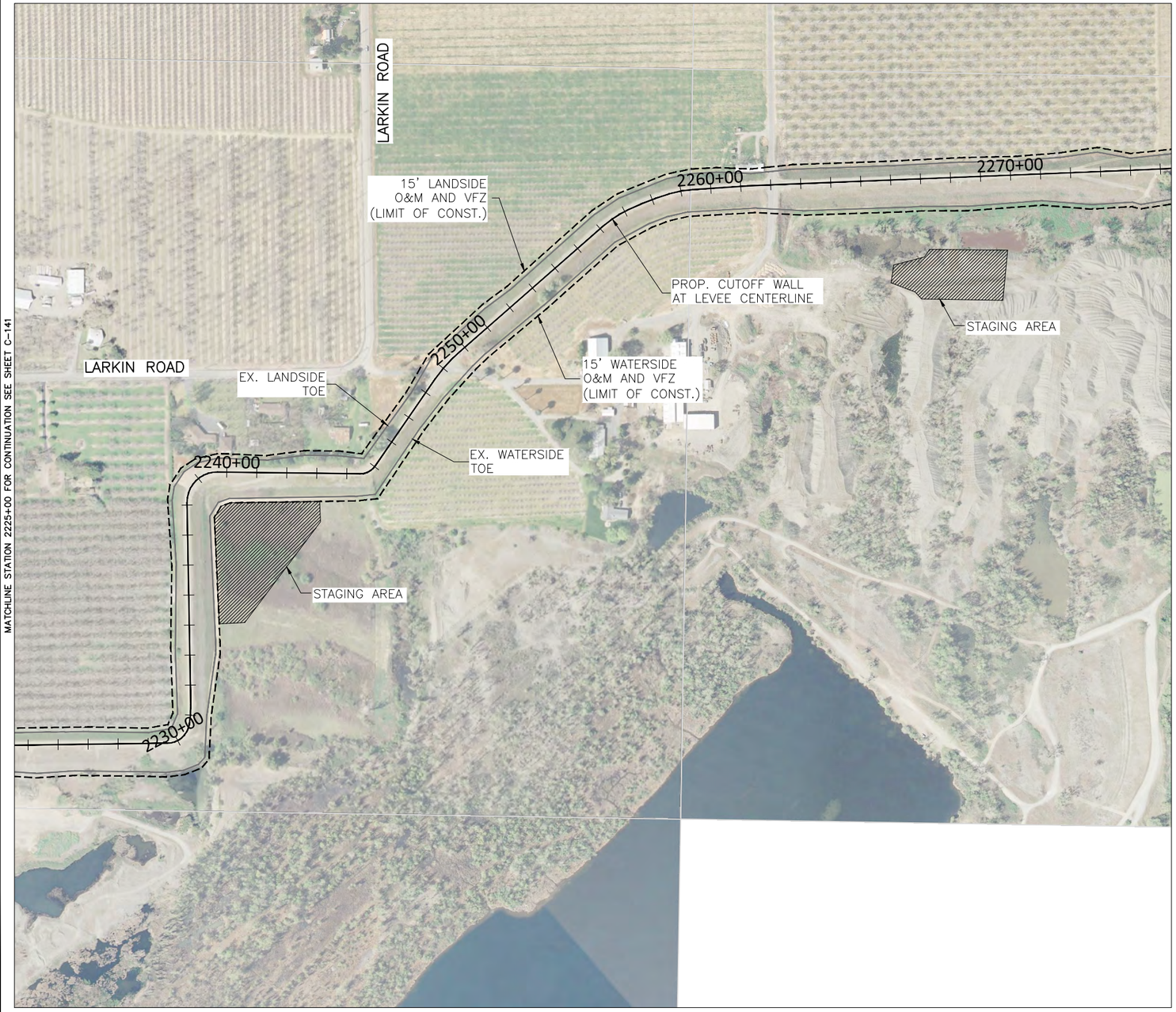

0 200 400

DRAWING SCALE

NOT FOR CONSTRUCTION

US Army Corps of Engineers
Sacramento District

Symbol	Description	Date	Approved
1A	DESCRIPTION1	DATE1	APPROVAL1
2A	DESCRIPTION2	DATE2	APPROVAL2
3A	DESCRIPTION3	DATE3	APPROVAL3
4A	DESCRIPTION4	DATE4	APPROVAL4
5A	DESCRIPTION5	DATE5	APPROVAL5
6A	DESCRIPTION6	DATE6	APPROVAL6
7A	DESCRIPTION7	DATE7	APPROVAL7
8A	DESCRIPTION8	DATE8	APPROVAL8

DEPARTMENT OF THE ARMY
CORPS OF ENGINEERS
SACRAMENTO, CALIFORNIA

SACRAMENTO DISTRICT
IN-HOUSE DESIGN
1325 "J" STREET
SACRAMENTO, CA 95814-2922

Designed by: –
Dwn by: –
Reviewed by: –
Submitted by: –
CHIEF, CIV ENGR DES SEC A

Date: –
Spec No.: –
Design file no: –
Drawing Code: –
File name: $$$$date+$$$$
Plot date:
Plot scale: –

Rev: –

SUTTER & BUTTE COUNTY CALIFORNIA
SUTTER BASIN PILOT FEASIBILITY STUDY
DRAFT REPORT
ALTERNATIVE SB-8
PLAN VIEW
STA 2225+00 TO 2275+00

Sheet reference number:
C-142

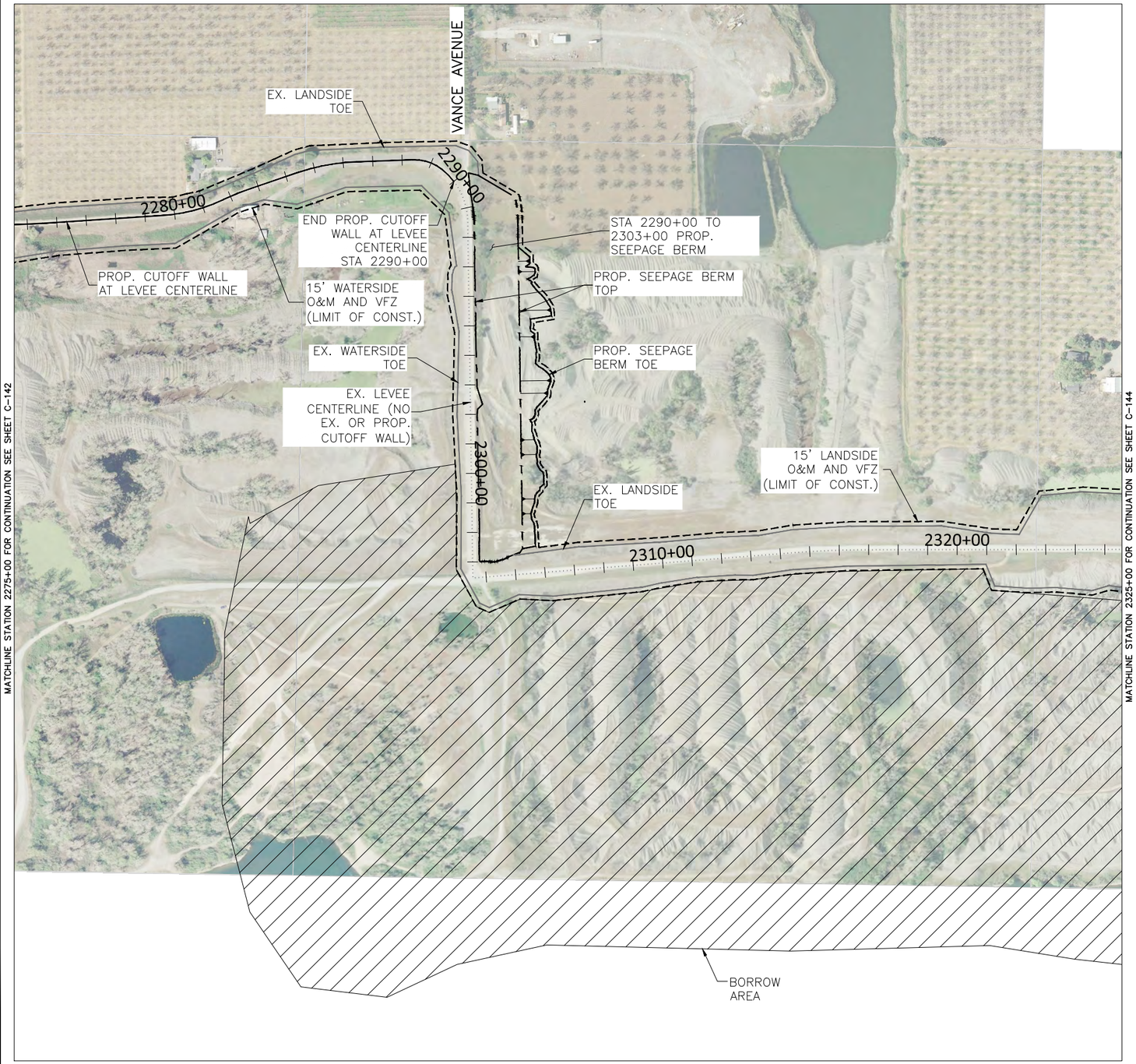

HORIZONTAL DATUM

THE HORIZONTAL DATUM OF THIS SURVEY IS THE NORTH AMERICAN DATUM OF 1983 (NAD83) BEING THE CALIFORNIA COORDINATE SYSTEM OF 1983 ZONE 2 (GRID SURFACE).

N

0 200 400
DRAWING SCALE

NOT FOR CONSTRUCTION

US Army Corps of Engineers
Sacramento District

Symbol	Description	Date	Approved
DA	DESCRIPTION8	DATE8	APPROVAL8
DA	DESCRIPTION7	DATE7	APPROVAL7
DA	DESCRIPTION6	DATE6	APPROVAL6
DA	DESCRIPTION5	DATE5	APPROVAL5
DA	DESCRIPTION4	DATE4	APPROVAL4
DA	DESCRIPTION3	DATE3	APPROVAL3
DA	DESCRIPTION2	DATE2	APPROVAL2
DA	DESCRIPTION1	DATE1	APPROVAL1

DEPARTMENT OF THE ARMY
CORPS OF ENGINEERS
SACRAMENTO, CALIFORNIA

SACRAMENTO DISTRICT
IN-HOUSE DESIGN
1325 "J" STREET
SACRAMENTO, CA 95814-2922

Designed by: –		Date: –	Rev: –
Dwn by: –	Spec No.: –	Design file no: –	
Reviewed by: –		Drawing Code: –	
Submitted by: –		File name: $$$$date$$$$	
CHIEF, CIV ENGR DES SEC A		Plot date:	
		Plot scale: –	

SUTTER & BUTTE COUNTY CALIFORNIA
SUTTER BASIN PILOT FEASIBILITY STUDY
DRAFT REPORT
ALTERNATIVE SB-8
PLAN VIEW
STA 2275+00 TO 2325+00

Sheet reference number:
C-143

HORIZONTAL DATUM

THE HORIZONTAL DATUM OF THIS SURVEY IS THE NORTH AMERICAN DATUM OF 1983 (NAD83) BEING THE CALIFORNIA COORDINATE SYSTEM OF 1983 ZONE 2 (GRID SURFACE).

N

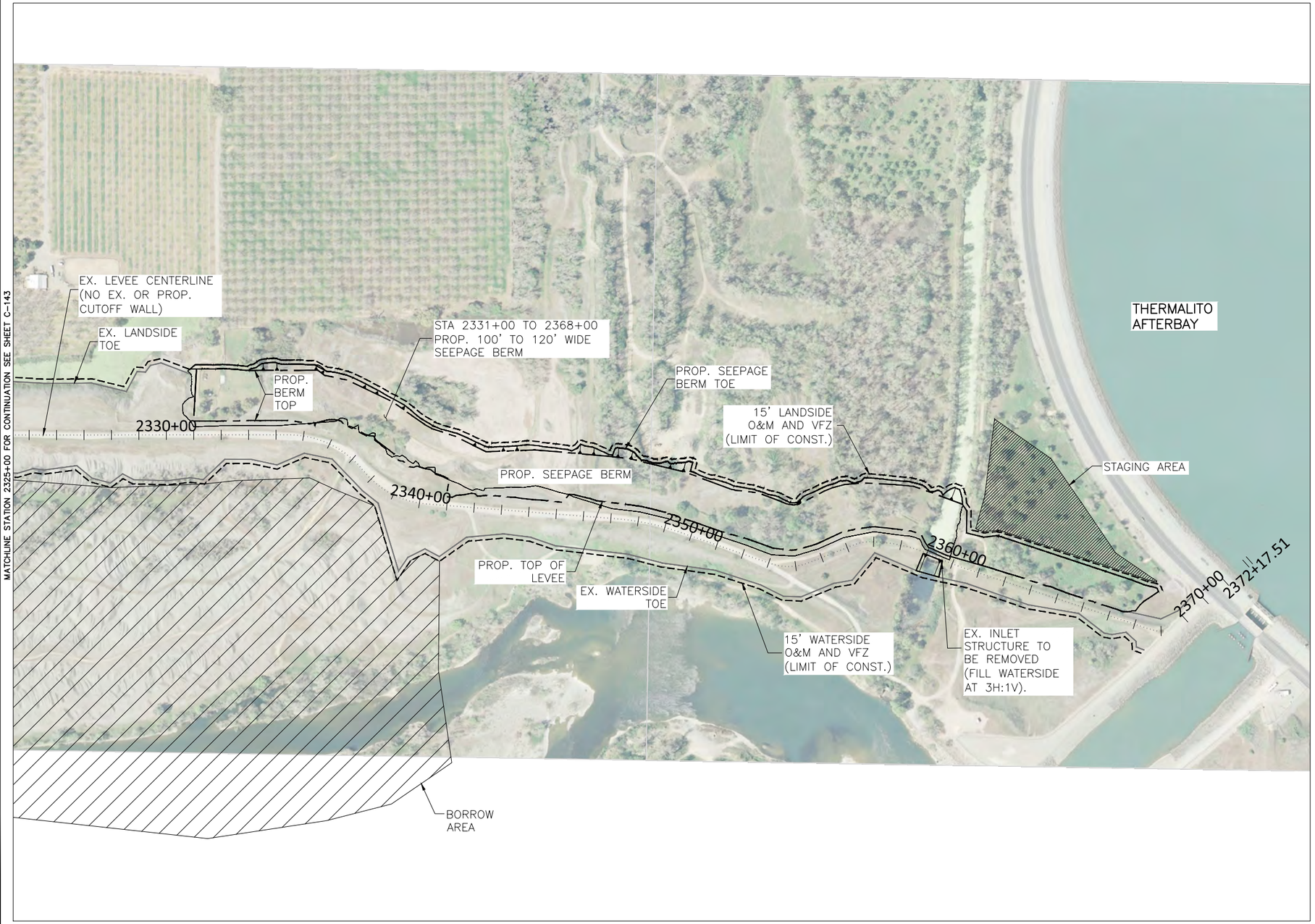

0 200 400
DRAWING SCALE

NOT FOR CONSTRUCTION

US Army Corps of Engineers
Sacramento District

Symbol	Description	Date	Approved
08	DESCRIPTION8	DATE8	APPROVAL8
07	DESCRIPTION7	DATE7	APPROVAL7
06	DESCRIPTION6	DATE6	APPROVAL6
05	DESCRIPTION5	DATE5	APPROVAL5
04	DESCRIPTION4	DATE4	APPROVAL4
03	DESCRIPTION3	DATE3	APPROVAL3
02	DESCRIPTION2	DATE2	APPROVAL2
01	DESCRIPTION1	DATE1	APPROVAL1

DEPARTMENT OF THE ARMY
CORPS OF ENGINEERS
SACRAMENTO, CALIFORNIA

SACRAMENTO DISTRICT
IN-HOUSE DESIGN
1325 "J" STREET
SACRAMENTO, CA 95814-2922

Designed by: –		Date: –	Rev: –
Dwn by: –	Spec No.: –	Design file no: –	
Reviewed by: –		Drawing Code: –	
Submitted by: –		File name: $$$$date+$$$$	
CHIEF, CIV ENGR DES SEC A		Plot date: –	
		Plot scale: –	

SUTTER & BUTTE COUNTY CALIFORNIA
SUTTER BASIN PILOT FEASIBILITY STUDY
DRAFT REPORT
ALTERNATIVE SB-8
PLAN VIEW
STA 2325+00 TO 2368+00

Sheet reference number:
C-144

HORIZONTAL DATUM

THE HORIZONTAL DATUM OF THIS SURVEY IS THE NORTH AMERICAN DATUM OF 1983 (NAD83) BEING THE CALIFORNIA COORDINATE SYSTEM OF 1983 ZONE 2 (GRID SURFACE).

N

0 200 400
DRAWING SCALE

NOT FOR CONSTRUCTION

US Army Corps of Engineers
Sacramento District

Symbol	Description	Date	Approved
08	DESCRIPTION8	DATE8	APPROVAL8
07	DESCRIPTION7	DATE7	APPROVAL7
06	DESCRIPTION6	DATE6	APPROVAL6
05	DESCRIPTION5	DATE5	APPROVAL5
04	DESCRIPTION4	DATE4	APPROVAL4
03	DESCRIPTION3	DATE3	APPROVAL3
02	DESCRIPTION2	DATE2	APPROVAL2
01	DESCRIPTION1	DATE1	APPROVAL1

Designed by: –
Dwn by: –
Ckd by: –
Reviewed by: –
Submitted by: –
CHIEF, CIV ENGR DES SEC A

Date: –
Spec No.: –
Design file no: –
Drawing Code: –
File name: $$$$date+$$$$
Plot date:
Plot scale: –
Rev. –

DEPARTMENT OF THE ARMY
CORPS OF ENGINEERS
SACRAMENTO, CALIFORNIA

SACRAMENTO DISTRICT
IN-HOUSE DESIGN
1325 "J" STREET
SACRAMENTO, CA 95814-2922

SUTTER & BUTTE COUNTY CALIFORNIA
SUTTER BASIN PILOT FEASIBILITY STUDY
DRAFT REPORT
ALTERNATIVE SB-7 AND SB-8
STAR BEND SETBACK OPTION
PLAN VIEW
STA. 478+68 to STA. 512+00

Sheet reference number:
C-145

VERTICAL DATUM

THE VERTICAL DATUM OF THIS SURVEY IS THE NORTH AMERICAN VERTICAL DATUM OF 1988 (NAVD88) BEING BASED ON NATIONAL GEODETIC SURVEY (NGS) POINTS LISTED AND DERIVED BY GLOBAL POSITIONING SYSTEM (GPS) STATIC METHOD.

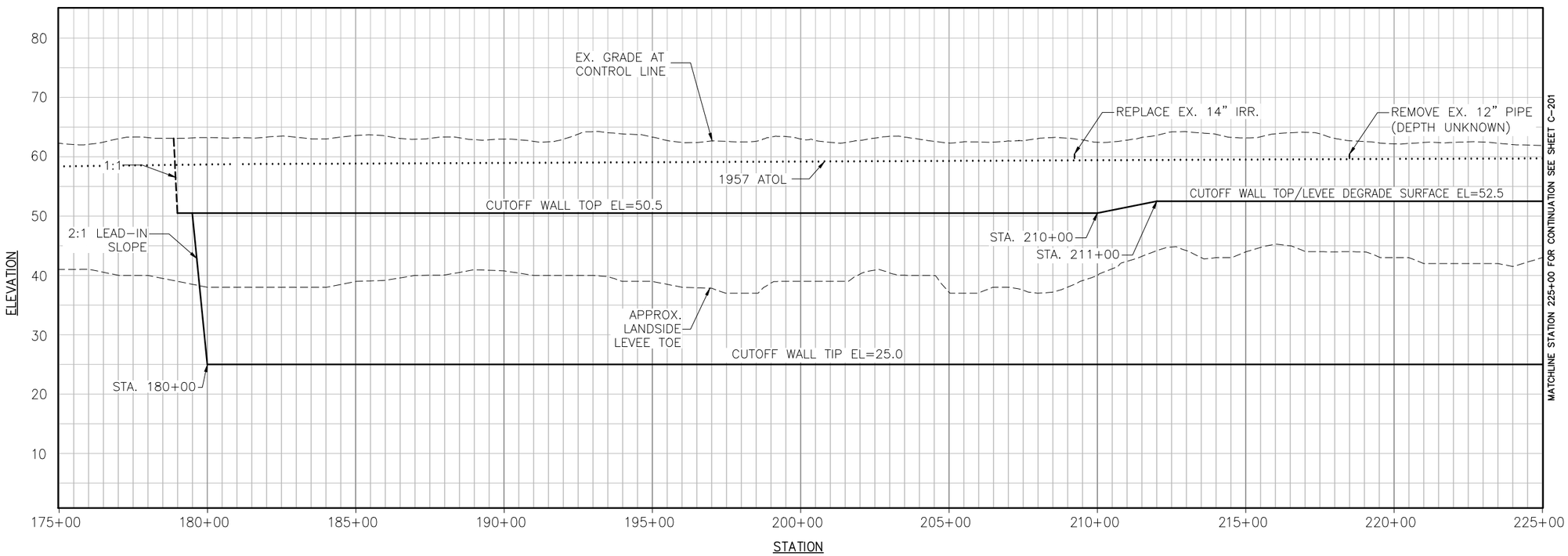

PROFILE

PROFILE
H: 1"=200'
V: 1"=10'

0 200 400

NOT FOR CONSTRUCTION

US Army Corps of Engineers
Sacramento District

Symbol	Description	Date	Approved
DA	DESCRIPTION8	DATE8	APPROVAL8
DA	DESCRIPTION7	DATE7	APPROVAL7
DA	DESCRIPTION6	DATE6	APPROVAL6
DA	DESCRIPTION5	DATE5	APPROVAL5
DA	DESCRIPTION4	DATE4	APPROVAL4
DA	DESCRIPTION3	DATE3	APPROVAL3
DA	DESCRIPTION2	DATE2	APPROVAL2
DA	DESCRIPTION1	DATE1	APPROVAL1

DEPARTMENT OF THE ARMY
CORPS OF ENGINEERS
SACRAMENTO, CALIFORNIA

SACRAMENTO DISTRICT
IN-HOUSE DESIGN
1325 "J" STREET
SACRAMENTO, CA 95814-2922

Designed by: –		Date: –	Rev: –
Dwn by: –	Spec No.: –	Design file no: –	
Reviewed by: –		Drawing Code: –	
Submitted by: – CHIEF, DV ENGR SDS SEC A		File name: Plot date: $$$$date$$$$ Plot scale: –	

SUTTER & BUTTE COUNTY CALIFORNIA
SUTTER BASIN PILOT FEASIBILITY STUDY
DRAFT REPORT
ALTERNATIVE SB-7 AND SB-8
PROFILE VIEW
STA 175+00 TO 225+00

Sheet reference number:
C-201

VERTICAL DATUM

THE VERTICAL DATUM OF THIS SURVEY IS THE NORTH AMERICAN VERTICAL DATUM OF 1988 (NAVD88) BEING BASED ON NATIONAL GEODETIC SURVEY (NGS) POINTS LISTED AND DERIVED BY GLOBAL POSITIONING SYSTEM (GPS) STATIC METHOD.

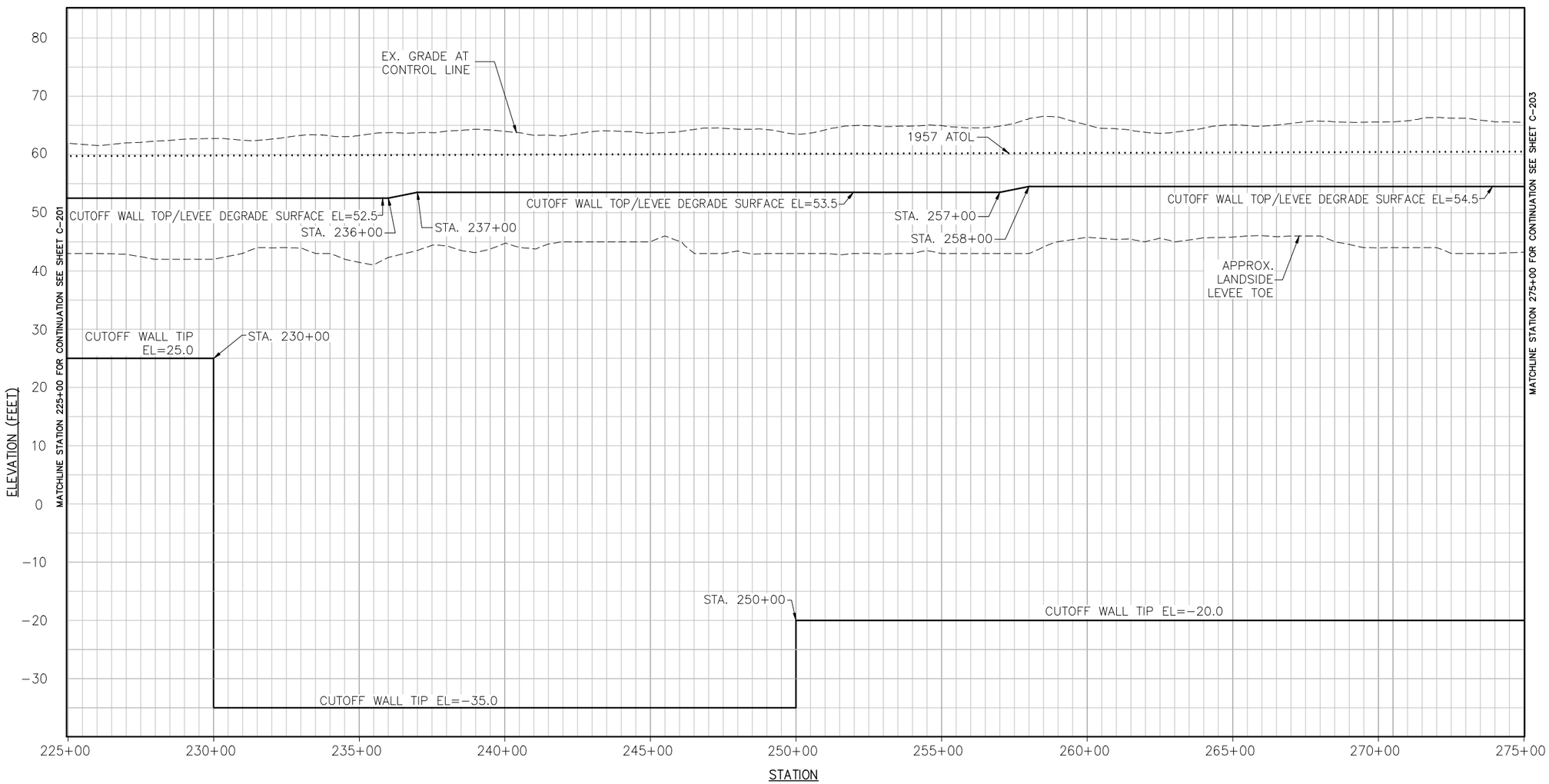

PROFILE

PROFILE
H: 1"=200'
V: 1"=10'

0 200 400

NOT FOR CONSTRUCTION

US Army Corps of Engineers
Sacramento District

Symbol	Description	Date	Approved
0A	DESCRIPTION8	DATE8	APPROVAL8
0X	DESCRIPTION7	DATE7	APPROVAL7
0A	DESCRIPTION6	DATE6	APPROVAL6
0A	DESCRIPTION5	DATE5	APPROVAL5
0A	DESCRIPTION4	DATE4	APPROVAL4
0A	DESCRIPTION3	DATE3	APPROVAL3
0A	DESCRIPTION2	DATE2	APPROVAL2
0A	DESCRIPTION1	DATE1	APPROVAL1

Designed by: –
Dwn by: –
Spec No.: –
Date: –
Rev: –
Design file no: –
Reviewed by: –
Drawing Code: –
Submitted by: –
File name: $$$$date$$$$
Plot date:
Plot scale: –
CHIEF, CIV ENGR DES SEC A

DEPARTMENT OF THE ARMY
CORPS OF ENGINEERS
SACRAMENTO, CALIFORNIA

SACRAMENTO DISTRICT
IN-HOUSE DESIGN
1325 "J" STREET
SACRAMENTO, CA 95814-2922

SUTTER & BUTTE COUNTY CALIFORNIA
SUTTER BASIN PILOT FEASIBILITY STUDY
DRAFT REPORT
ALTERNATIVE SB-7 AND SB-8
PROFILE VIEW
STA 225+00 TO 275+00

Sheet reference number:
C-202

VERTICAL DATUM

THE VERTICAL DATUM OF THIS SURVEY IS THE NORTH AMERICAN VERTICAL DATUM OF 1988 (NAVD88) BEING BASED ON NATIONAL GEODETIC SURVEY (NGS) POINTS LISTED AND DERIVED BY GLOBAL POSITIONING SYSTEM (GPS) STATIC METHOD.

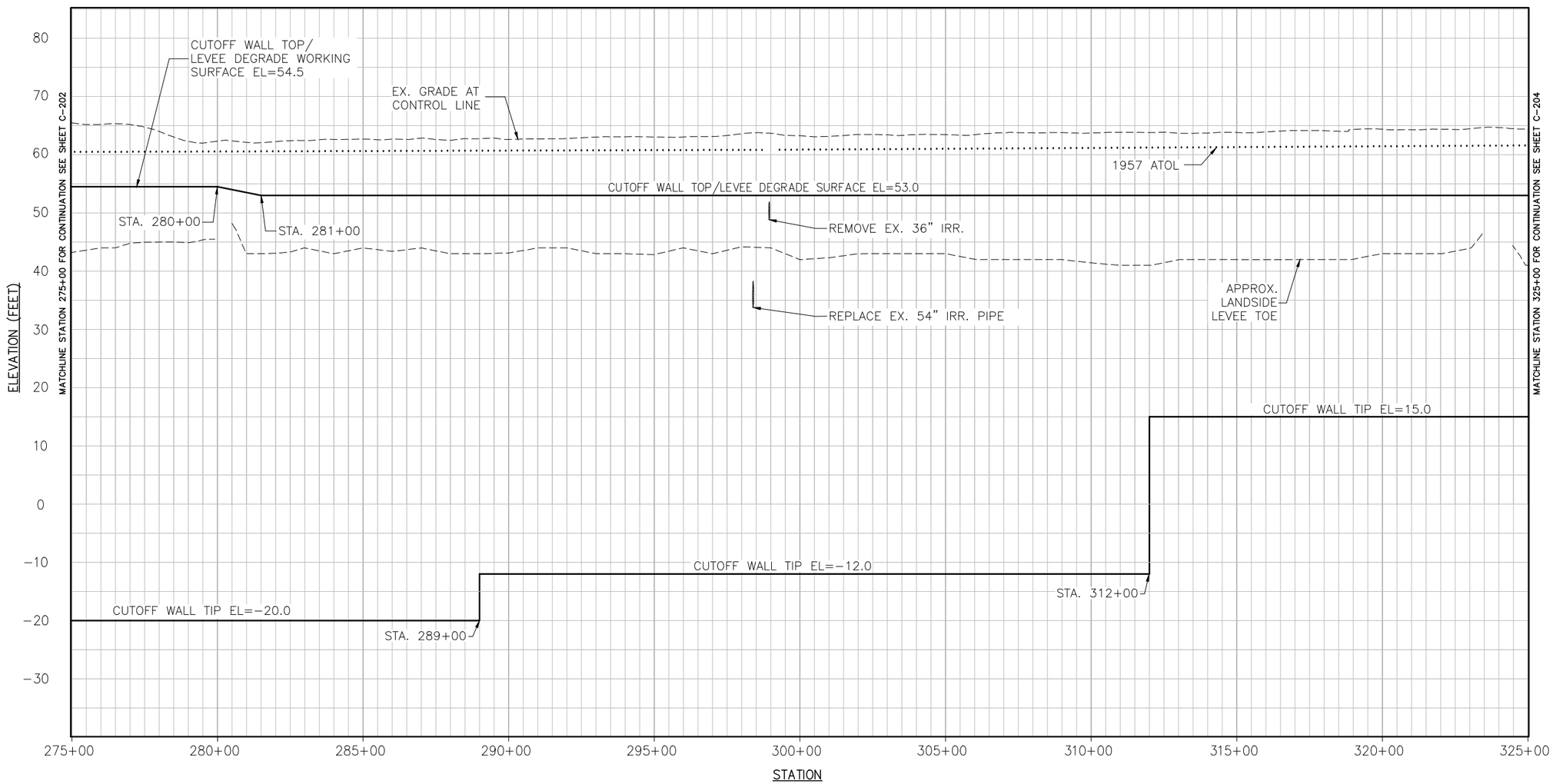

PROFILE

PROFILE
H: 1"=200'
V: 1"=10'

0 200 400

NOT FOR CONSTRUCTION

US Army Corps of Engineers
Sacramento District

Symbol	Description	Date	Approved
0A	DESCRIPTION8	DATE8	APPROVAL8
0X	DESCRIPTION7	DATE7	APPROVAL7
0A	DESCRIPTION6	DATE6	APPROVAL6
0A	DESCRIPTION5	DATE5	APPROVAL5
0A	DESCRIPTION4	DATE4	APPROVAL4
0A	DESCRIPTION3	DATE3	APPROVAL3
0A	DESCRIPTION2	DATE2	APPROVAL2
0A	DESCRIPTION1	DATE1	APPROVAL1

Designed by: –
Dwn by: –
Spec No.: –
Rev: –
Date: –
Design file no: –
Reviewed by: –
Drawing Code: –
Submitted by: –
File name: $$$$date$$$$
Plot date:
Plot scale: –
CHIEF, CIV ENGR DES SEC-A

DEPARTMENT OF THE ARMY
CORPS OF ENGINEERS
SACRAMENTO, CALIFORNIA

SACRAMENTO DISTRICT
IN-HOUSE DESIGN
1325 "J" STREET
SACRAMENTO, CA 95814-2922

SUTTER & BUTTE COUNTY CALIFORNIA
SUTTER BASIN PILOT FEASIBILITY STUDY
DRAFT REPORT
ALTERNATIVE SB-7 AND SB-8
PROFILE VIEW
STA 275+00 TO 325+00

Sheet reference number:
C-203

VERTICAL DATUM

THE VERTICAL DATUM OF THIS SURVEY IS THE NORTH AMERICAN VERTICAL DATUM OF 1988 (NAVD88) BEING BASED ON NATIONAL GEODETIC SURVEY (NGS) POINTS LISTED AND DERIVED BY GLOBAL POSITIONING SYSTEM (GPS) STATIC METHOD.

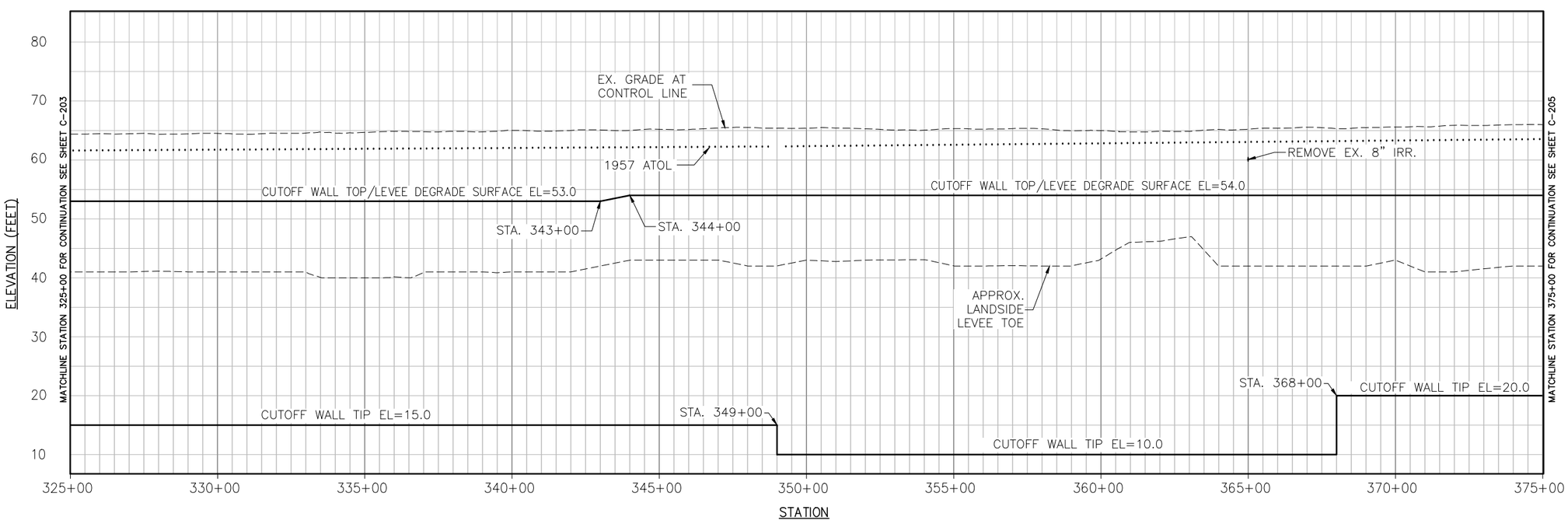

PROFILE

PROFILE
H: 1"=200'
V: 1"=10'

0 200 400

NOT FOR CONSTRUCTION

US Army Corps of Engineers
Sacramento District

Symbol	Description	Date	Approved
8	DESCRIPTION8	DATE8	APPROVAL8
7	DESCRIPTION7	DATE7	APPROVAL7
6	DESCRIPTION6	DATE6	APPROVAL6
5	DESCRIPTION5	DATE5	APPROVAL5
4	DESCRIPTION4	DATE4	APPROVAL4
3	DESCRIPTION3	DATE3	APPROVAL3
2	DESCRIPTION2	DATE2	APPROVAL2
1	DESCRIPTION1	DATE1	APPROVAL1

Designed by: – Date: – Rev: –
Dwn by: – Spec No.: – Design file no: –
Reviewed by: – Drawing Code: –
Submitted by: – File name: $$$$date$$$$
Plot date:
Plot scale: –
CHIEF, CIV ENGR DES SEC A

DEPARTMENT OF THE ARMY
CORPS OF ENGINEERS
SACRAMENTO, CALIFORNIA

SACRAMENTO DISTRICT
IN-HOUSE DESIGN
1325 "J" STREET
SACRAMENTO, CA 95814-2922

SUTTER & BUTTE COUNTY CALIFORNIA
SUTTER BASIN PILOT FEASIBILITY STUDY
DRAFT REPORT
ALTERNATIVE SB-7 AND SB-8
PROFILE VIEW
STA 325+00 TO 375+00

Sheet reference number:
C-204

VERTICAL DATUM

THE VERTICAL DATUM OF THIS SURVEY IS THE NORTH AMERICAN VERTICAL DATUM OF 1988 (NAVD88) BEING BASED ON NATIONAL GEODETIC SURVEY (NGS) POINTS LISTED AND DERIVED BY GLOBAL POSITIONING SYSTEM (GPS) STATIC METHOD.

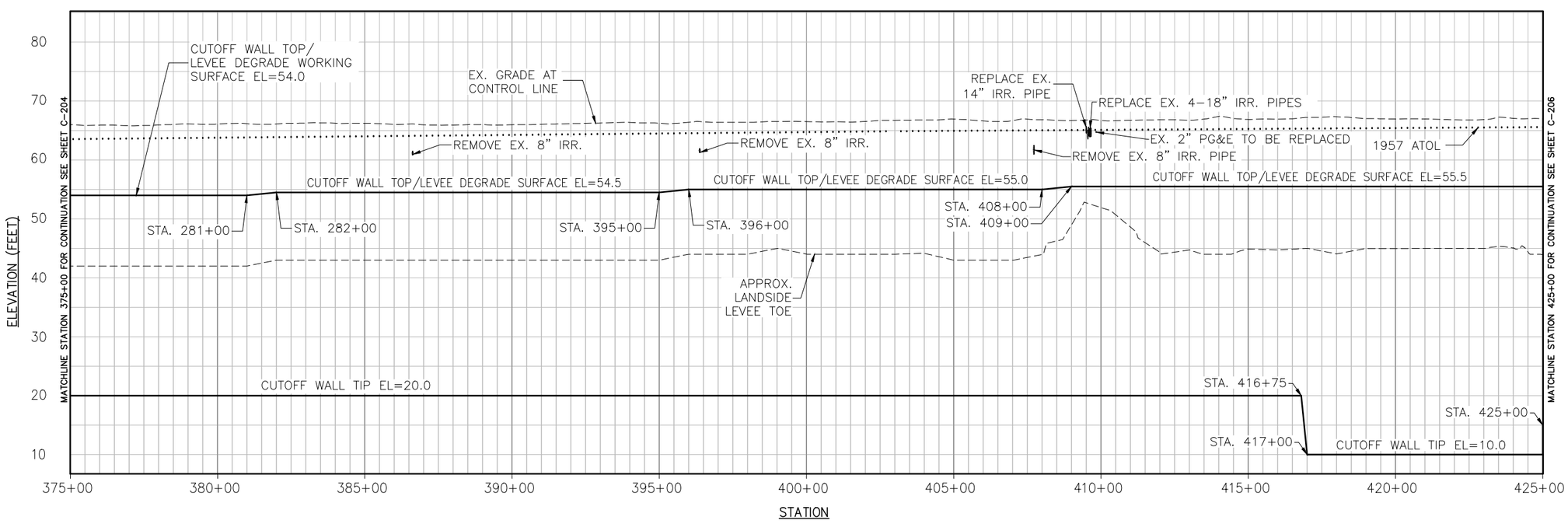

PROFILE

PROFILE
H: 1"=200'
V: 1"=10'

0 200 400

NOT FOR CONSTRUCTION

US Army Corps of Engineers
Sacramento District

Symbol	Description	Date	Approved
0	DESCRIPTION8	DATE8	APPROVAL8
0	DESCRIPTION7	DATE7	APPROVAL7
0	DESCRIPTION6	DATE6	APPROVAL6
0	DESCRIPTION5	DATE5	APPROVAL5
0	DESCRIPTION4	DATE4	APPROVAL4
0	DESCRIPTION3	DATE3	APPROVAL3
0	DESCRIPTION2	DATE2	APPROVAL2
0	DESCRIPTION1	DATE1	APPROVAL1

Designed by: –
Dwn by: –
Spec No.: –
Reviewed by: –
Submitted by: –
CHIEF, CIV ENGR DES SEC A
Date: –
Rev: –
Design File no: –
Drawing Code: –
File name: $$$$date+$$$$
Plot date:
Plot scale: –

DEPARTMENT OF THE ARMY
CORPS OF ENGINEERS
SACRAMENTO, CALIFORNIA

SACRAMENTO DISTRICT
IN-HOUSE DESIGN
1325 "J" STREET
SACRAMENTO, CA 95814-2922

SUTTER & BUTTE COUNTY CALIFORNIA
SUTTER BASIN PILOT FEASIBILITY STUDY
DRAFT REPORT
ALTERNATIVE SB-7 AND SB-8
PROFILE VIEW
STA 375+00 TO 425+00

Sheet reference number:
C-205

VERTICAL DATUM

THE VERTICAL DATUM OF THIS SURVEY IS THE NORTH AMERICAN VERTICAL DATUM OF 1988 (NAVD88) BEING BASED ON NATIONAL GEODETIC SURVEY (NGS) POINTS LISTED AND DERIVED BY GLOBAL POSITIONING SYSTEM (GPS) STATIC METHOD.

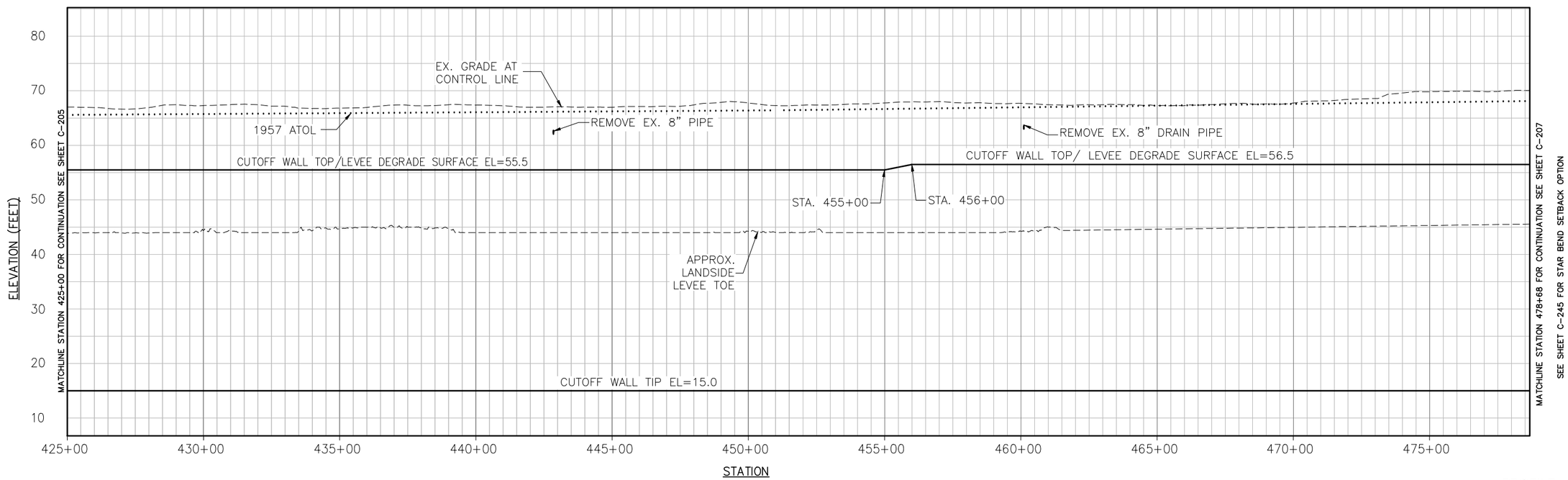

PROFILE

PROFILE
H: 1"=200'
V: 1"=10'

0 200 400

NOT FOR CONSTRUCTION

US Army Corps of Engineers
Sacramento District

Symbol	Description	Date	Approved
10	DESCRIPTION10	DATE10	APPROVAL10
9	DESCRIPTION9	DATE9	APPROVAL9
8	DESCRIPTION8	DATE8	APPROVAL8
7	DESCRIPTION7	DATE7	APPROVAL7
6	DESCRIPTION6	DATE6	APPROVAL6
5	DESCRIPTION5	DATE5	APPROVAL5
4	DESCRIPTION4	DATE4	APPROVAL4
3	DESCRIPTION3	DATE3	APPROVAL3
2	DESCRIPTION2	DATE2	APPROVAL2
1	DESCRIPTION1	DATE1	APPROVAL1

Designed by: –
Dwn by: –
Spec No.: –
Reviewed by: –
Submitted by: –
CHIEF, CIV ENGR DES SEC A
Date: –
Design file no: –
Drawing Code: –
File name: –
Plot date: $$$$date$$$$
Plot scale: –
Rev: –

DEPARTMENT OF THE ARMY
CORPS OF ENGINEERS
SACRAMENTO, CALIFORNIA

SACRAMENTO DISTRICT
IN-HOUSE DESIGN
1325 "J" STREET
SACRAMENTO, CA 95814-2922

SUTTER & BUTTE COUNTY CALIFORNIA
SUTTER BASIN PILOT FEASIBILITY STUDY
DRAFT REPORT
ALTERNATIVE SB-7 AND SB-8
PROFILE VIEW
STA 425+00 TO 478+68

Sheet reference number:
C-206

VERTICAL DATUM

THE VERTICAL DATUM OF THIS SURVEY IS THE NORTH AMERICAN VERTICAL DATUM OF 1988 (NAVD88) BEING BASED ON NATIONAL GEODETIC SURVEY (NGS) POINTS LISTED AND DERIVED BY GLOBAL POSITIONING SYSTEM (GPS) STATIC METHOD.

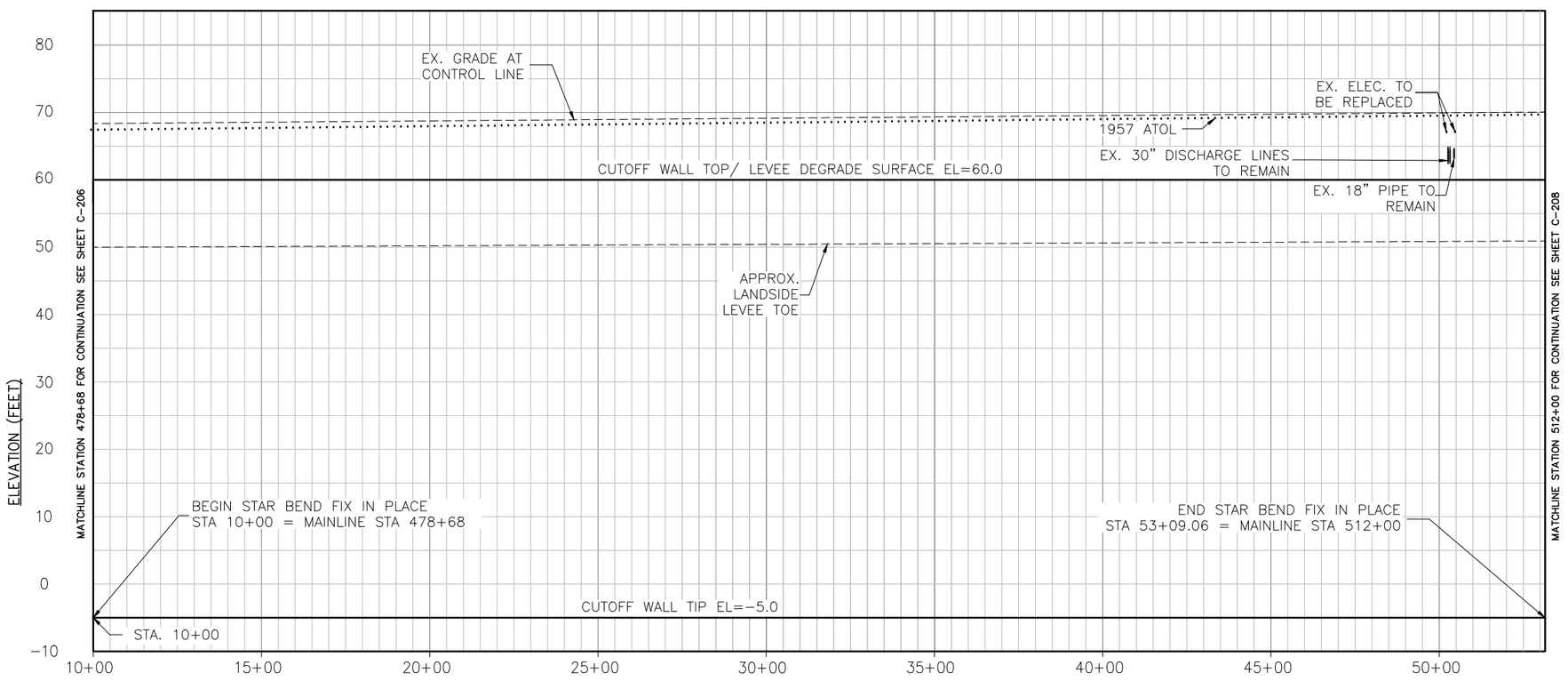

STATION EQUATIONS:

STAR BEND FIX-IN PLACE STA 10+00 = MAINLINE STATION 478+68
STAR BEND FIX-IN PLACE STA 53+09.06 = MAINLINE STATION 512+00

STATION

PROFILE

NOTE: SEE SHEET C-245 FOR STAR BEND SETBACK OPTION

PROFILE
H: 1"=200'
V: 1"=10'

0 200 400

NOT FOR CONSTRUCTION

US Army Corps of Engineers
Sacramento District

Symbol	Description	Date	Approved
0A	DESCRIPTION8	DATE8	APPROVAL8
0A	DESCRIPTION7	DATE7	APPROVAL7
0A	DESCRIPTION6	DATE6	APPROVAL6
0A	DESCRIPTION5	DATE5	APPROVAL5
0A	DESCRIPTION4	DATE4	APPROVAL4
0A	DESCRIPTION3	DATE3	APPROVAL3
0A	DESCRIPTION2	DATE2	APPROVAL2
0A	DESCRIPTION1	DATE1	APPROVAL1

DEPARTMENT OF THE ARMY
CORPS OF ENGINEERS
SACRAMENTO, CALIFORNIA

SACRAMENTO DISTRICT
IN-HOUSE DESIGN
1325 "J" STREET
SACRAMENTO, CA 95814-2922

Designed by: –		Date: –	Rev: –
Dwn by: –	Spec No.: –	Design file no: –	
Reviewed by: –		Drawing Code: –	
Submitted by: –		File name: $$$$date$$$$	
CHIEF, CIV ENGR DES SEC A		Plot date: $$$$date$$$$	
		Plot scale: –	

SUTTER & BUTTE COUNTY CALIFORNIA
SUTTER BASIN PILOT FEASIBILITY STUDY
DRAFT REPORT
ALTERNATIVE SB-7 AND SB-8
PROFILE VIEW
STA. 478+68 to STA. 512+00 (MAINLINE)

Sheet reference number:
C-207

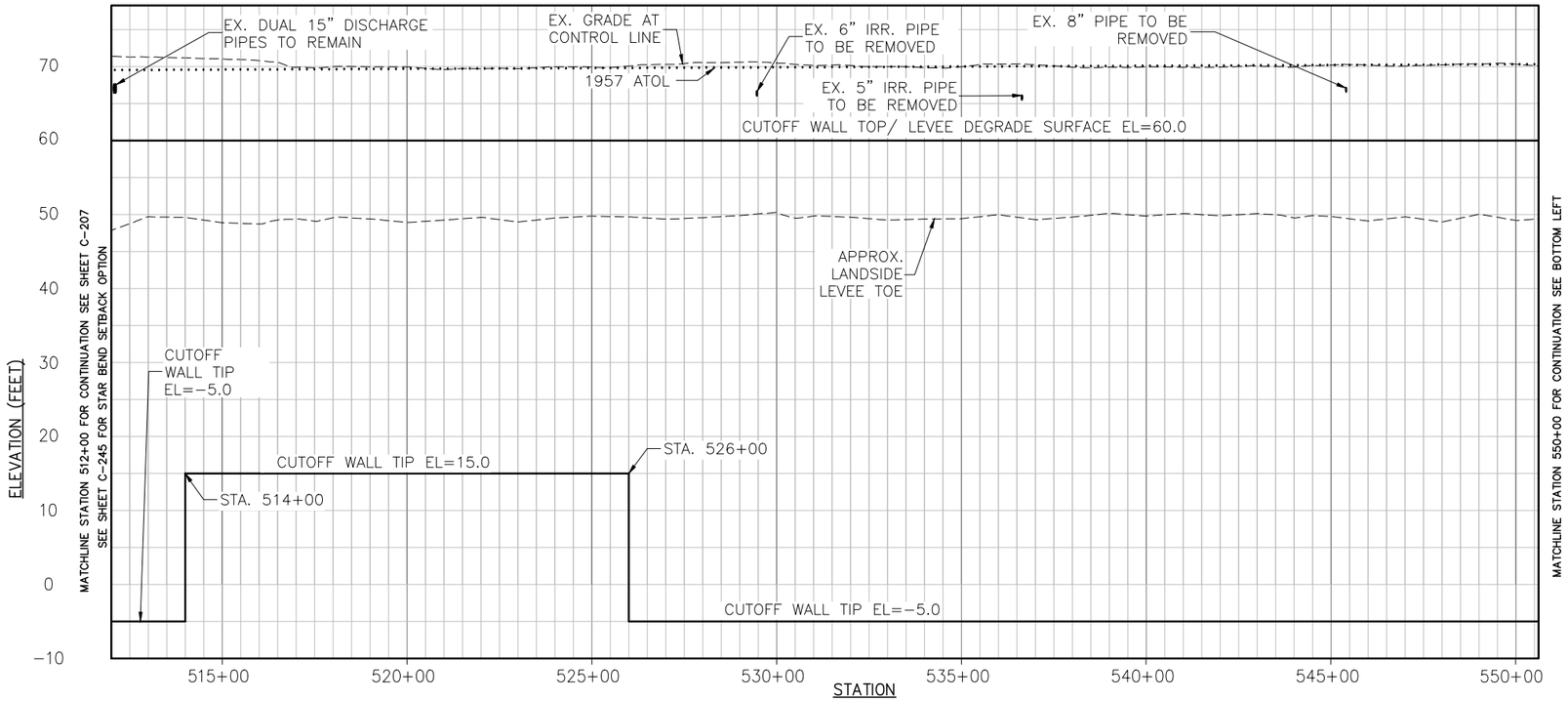

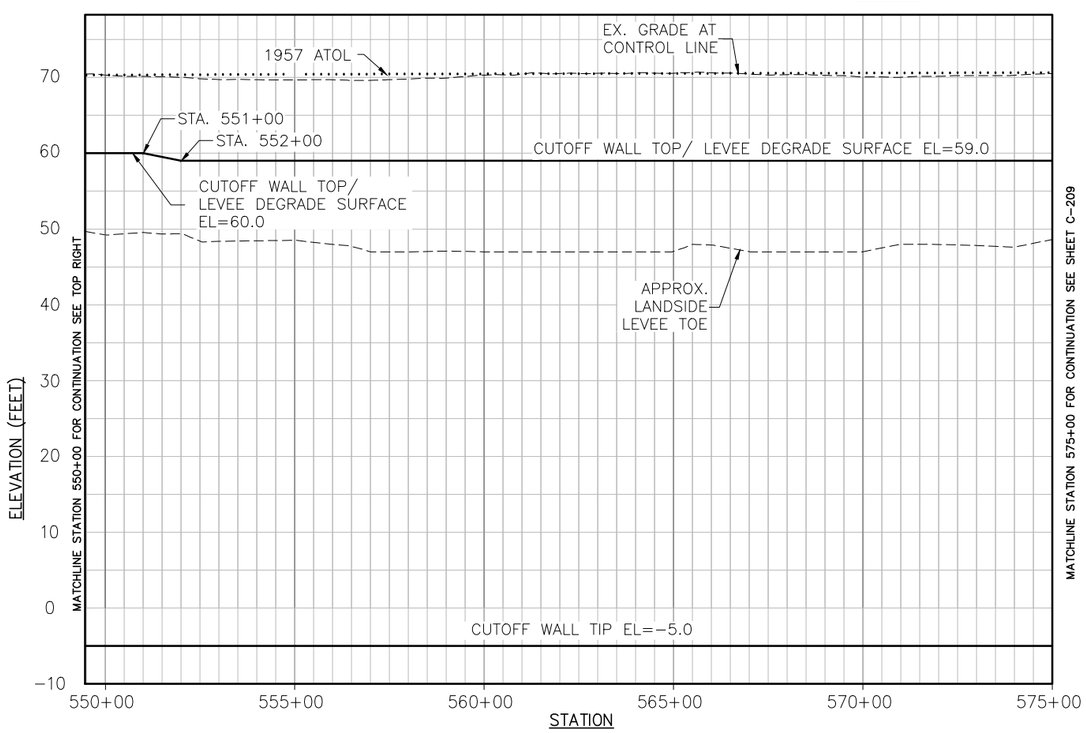

PROFILE

VERTICAL DATUM

THE VERTICAL DATUM OF THIS SURVEY IS THE NORTH AMERICAN VERTICAL DATUM OF 1988 (NAVD88) BEING BASED ON NATIONAL GEODETIC SURVEY (NGS) POINTS LISTED AND DERIVED BY GLOBAL POSITIONING SYSTEM (GPS) STATIC METHOD.

PROFILE
H: 1"=200'
V: 1"=10'

0 200 400

NOT FOR CONSTRUCTION

US Army Corps of Engineers
Sacramento District

Symbol	Description	Date	Approved
DA	DESCRIPTION8	DATE8	APPROVAL8
DA	DESCRIPTION7	DATE7	APPROVAL7
DA	DESCRIPTION6	DATE6	APPROVAL6
DA	DESCRIPTION5	DATE5	APPROVAL5
DA	DESCRIPTION4	DATE4	APPROVAL4
DA	DESCRIPTION3	DATE3	APPROVAL3
DA	DESCRIPTION2	DATE2	APPROVAL2
DA	DESCRIPTION1	DATE1	APPROVAL1

Designed by: –
Dwn by: –
Spec No.: –
Reviewed by: –
Submitted by: –
CHIEF, CIV ENGR DES SEC A
Date: –
Rev: –
Design file no: –
Drawing Code: –
File name: $$$$date+$$$$
Plot date:
Plot scale: –

DEPARTMENT OF THE ARMY
CORPS OF ENGINEERS
SACRAMENTO, CALIFORNIA

SACRAMENTO DISTRICT
IN-HOUSE DESIGN
1325 "J" STREET
SACRAMENTO, CA 95814-2922

SUTTER & BUTTE COUNTY CALIFORNIA
SUTTER BASIN PILOT FEASIBILITY STUDY
DRAFT REPORT
ALTERNATIVE SB-7 AND SB-8
PROFILE VIEW
STA 512+00 TO 575+00

Sheet reference number:
C-208

VERTICAL DATUM

THE VERTICAL DATUM OF THIS SURVEY IS THE NORTH AMERICAN VERTICAL DATUM OF 1988 (NAVD88) BEING BASED ON NATIONAL GEODETIC SURVEY (NGS) POINTS LISTED AND DERIVED BY GLOBAL POSITIONING SYSTEM (GPS) STATIC METHOD.

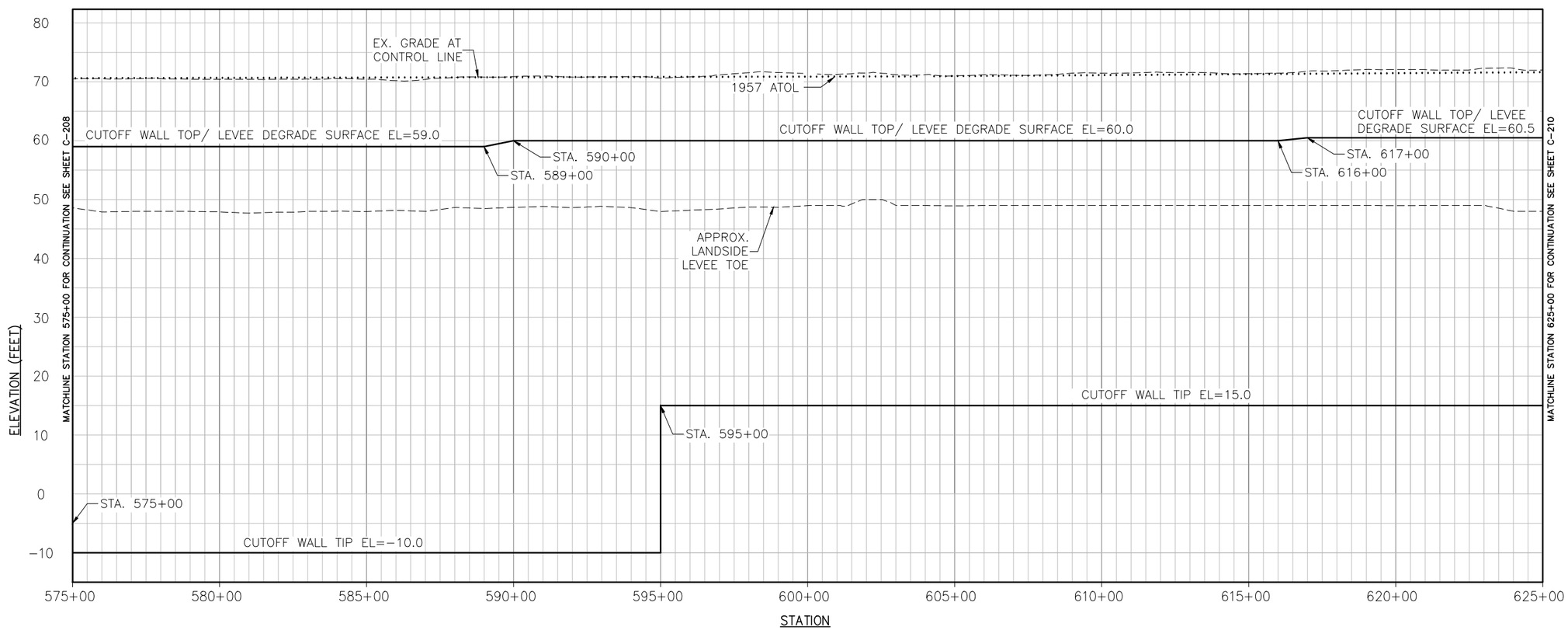

PROFILE

PROFILE
H: 1"=200'
V: 1"=10'

0 200 400

NOT FOR CONSTRUCTION

US Army Corps of Engineers
Sacramento District

Symbol	Description	Date	Approved
0A	DESCRIPTION8	DATE8	APPROVAL8
0X	DESCRIPTION7	DATE7	APPROVAL7
0A	DESCRIPTION6	DATE6	APPROVAL6
0A	DESCRIPTION5	DATE5	APPROVAL5
0A	DESCRIPTION4	DATE4	APPROVAL4
0A	DESCRIPTION3	DATE3	APPROVAL3
0A	DESCRIPTION2	DATE2	APPROVAL2
0A	DESCRIPTION1	DATE1	APPROVAL1

Designed by: –
Dwn by: –
Spec No.: –
Reviewed by: –
Submitted by: –
Date: –
Design file no: –
Drawing Code: –
File name: $$$$date$$$$
Plot date: –
Plot scale: –
CHECK, CV ENGR, DES, SEC, A

DEPARTMENT OF THE ARMY
CORPS OF ENGINEERS
SACRAMENTO, CALIFORNIA

SACRAMENTO DISTRICT
IN-HOUSE DESIGN
1325 "J" STREET
SACRAMENTO, CA 95814-2922

SUTTER & BUTTE COUNTY CALIFORNIA
SUTTER BASIN PILOT FEASIBILITY STUDY
DRAFT REPORT
ALTERNATIVE SB-7 AND SB-8
PROFILE VIEW
STA 575+00 TO 625+00

Sheet reference number:
C-209

VERTICAL DATUM

THE VERTICAL DATUM OF THIS SURVEY IS THE NORTH AMERICAN VERTICAL DATUM OF 1988 (NAVD88) BEING BASED ON NATIONAL GEODETIC SURVEY (NGS) POINTS LISTED AND DERIVED BY GLOBAL POSITIONING SYSTEM (GPS) STATIC METHOD.

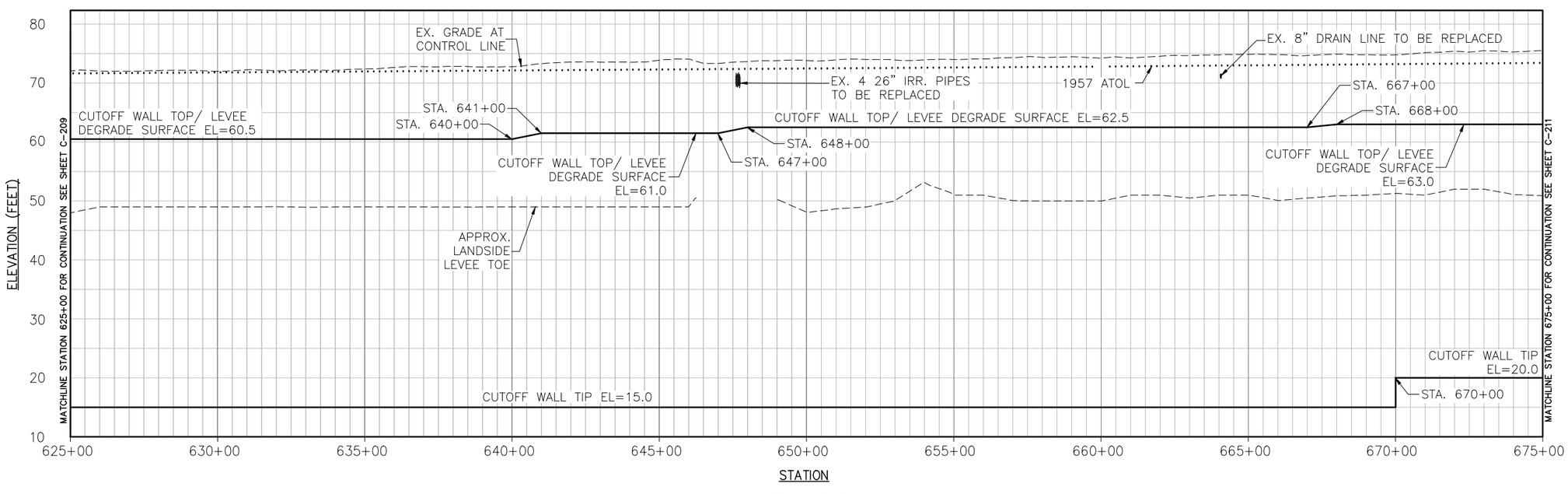

PROFILE

PROFILE
H: 1"=200'
V: 1"=10'

0 200 400

NOT FOR CONSTRUCTION

US Army Corps of Engineers
Sacramento District

Symbol	Description	Date	Approved
8	DESCRIPTION8	DATE8	APPROVAL8
7	DESCRIPTION7	DATE7	APPROVAL7
6	DESCRIPTION6	DATE6	APPROVAL6
5	DESCRIPTION5	DATE5	APPROVAL5
4	DESCRIPTION4	DATE4	APPROVAL4
3	DESCRIPTION3	DATE3	APPROVAL3
2	DESCRIPTION2	DATE2	APPROVAL2
1	DESCRIPTION1	DATE1	APPROVAL1

Designed by: – Date: – Rev: –
Dwn by: – Spec No.: – Design file no: –
Reviewed by: – Drawing Code: –
Submitted by: – File name: $$$$date$$$$
Plot date: Plot scale: –
CHIEF, CIV ENGR DES SEC A

DEPARTMENT OF THE ARMY
CORPS OF ENGINEERS
SACRAMENTO, CALIFORNIA

SACRAMENTO DISTRICT
IN-HOUSE DESIGN
1325 "J" STREET
SACRAMENTO, CA 95814-2922

SUTTER & BUTTE COUNTY CALIFORNIA
SUTTER BASIN PILOT FEASIBILITY STUDY
DRAFT REPORT
ALTERNATIVE SB-7 AND SB-8
PROFILE VIEW
STA 625+00 TO 675+00

Sheet reference number:
C-210

VERTICAL DATUM

THE VERTICAL DATUM OF THIS SURVEY IS THE NORTH AMERICAN VERTICAL DATUM OF 1988 (NAVD88) BEING BASED ON NATIONAL GEODETIC SURVEY (NGS) POINTS LISTED AND DERIVED BY GLOBAL POSITIONING SYSTEM (GPS) STATIC METHOD.

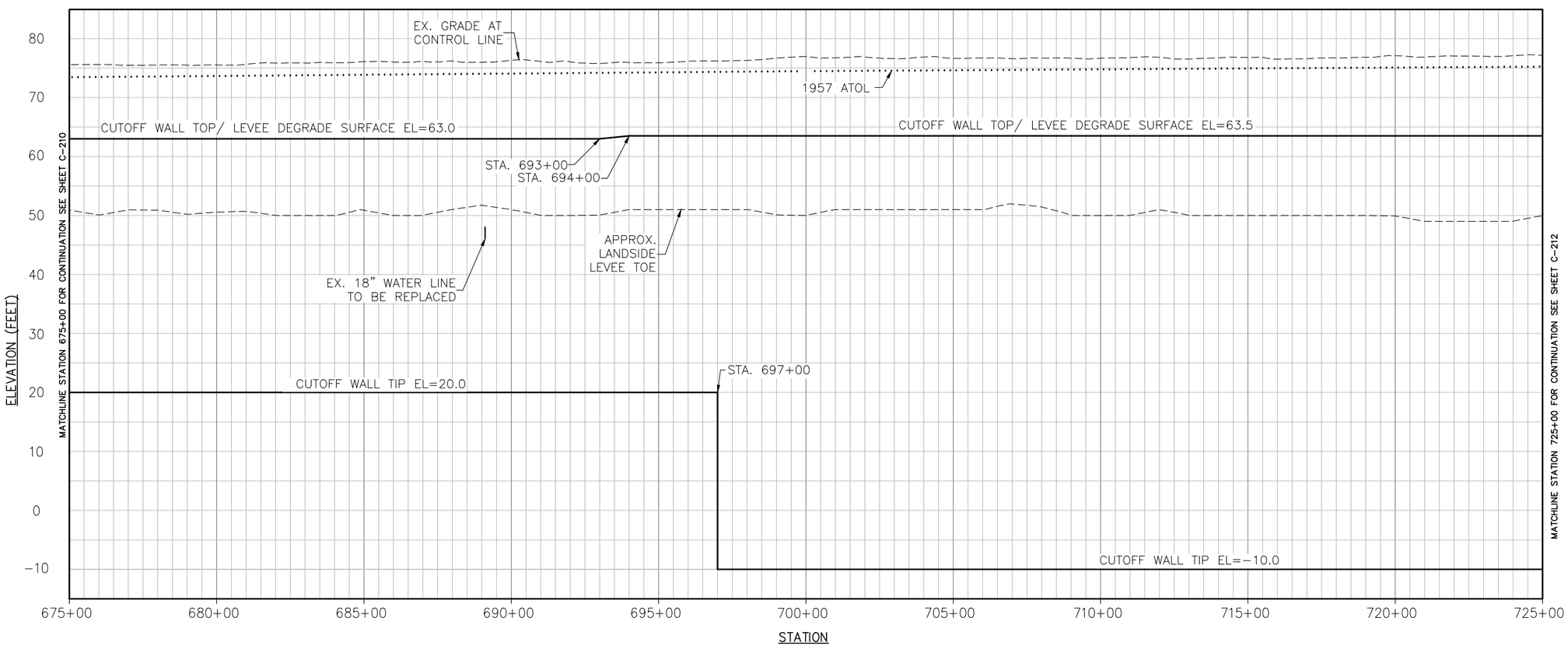

PROFILE

PROFILE
H: 1"=200'
V: 1"=10'

0 200 400

NOT FOR CONSTRUCTION

US Army Corps of Engineers
Sacramento District

Symbol	Description	Date	Approved
DA	DESCRIPTION8	DATE8	APPROVAL8
DA	DESCRIPTION7	DATE7	APPROVAL7
DA	DESCRIPTION6	DATE6	APPROVAL6
DA	DESCRIPTION5	DATE5	APPROVAL5
DA	DESCRIPTION4	DATE4	APPROVAL4
DA	DESCRIPTION3	DATE3	APPROVAL3
DA	DESCRIPTION2	DATE2	APPROVAL2
DA	DESCRIPTION1	DATE1	APPROVAL1

Designed by: –
Dwn by: –
Spec No.: –
Reviewed by: –
Submitted by: –
Date: –
Rev: –
Design file no: –
Drawing Code: –
File name: $$$$date+$$$$
Plot date:
Plot scale: –
CHIEF, CIV ENGR DES SEC A

DEPARTMENT OF THE ARMY
CORPS OF ENGINEERS
SACRAMENTO, CALIFORNIA

SACRAMENTO DISTRICT
IN-HOUSE DESIGN
1325 "J" STREET
SACRAMENTO, CA 95814-2922

SUTTER & BUTTE COUNTY CALIFORNIA
SUTTER BASIN PILOT FEASIBILITY STUDY
DRAFT REPORT
ALTERNATIVE SB-7 AND SB-8
PROFILE VIEW
STA 675+00 TO 725+00

Sheet reference number:
C-211

VERTICAL DATUM

THE VERTICAL DATUM OF THIS SURVEY IS THE NORTH AMERICAN VERTICAL DATUM OF 1988 (NAVD88) BEING BASED ON NATIONAL GEODETIC SURVEY (NGS) POINTS LISTED AND DERIVED BY GLOBAL POSITIONING SYSTEM (GPS) STATIC METHOD.

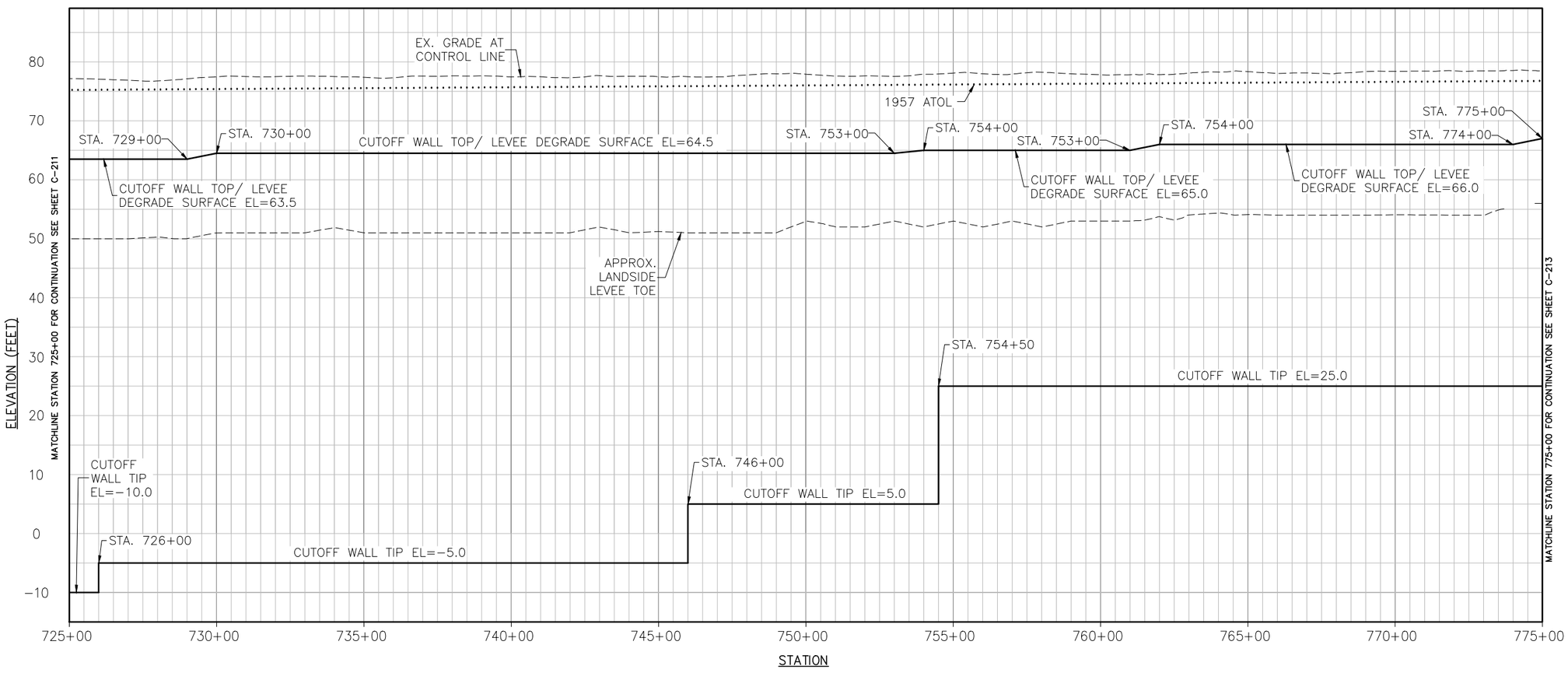

PROFILE

PROFILE
H: 1"=200'
V: 1"=10'

0 200 400

NOT FOR CONSTRUCTION

US Army Corps of Engineers
Sacramento District

Symbol	Description	Date	Approved
DA	DESCRIPTION8	DATE8	APPROVAL8
DA	DESCRIPTION7	DATE7	APPROVAL7
DA	DESCRIPTION6	DATE6	APPROVAL6
DA	DESCRIPTION5	DATE5	APPROVAL5
DA	DESCRIPTION4	DATE4	APPROVAL4
DA	DESCRIPTION3	DATE3	APPROVAL3
DA	DESCRIPTION2	DATE2	APPROVAL2
DA	DESCRIPTION1	DATE1	APPROVAL1

Designed by: –
Dwn by: –
Reviewed by: –
Submitted by: –
CHIEF, CIV ENGR DES SEC A
Date: –
Rev: –
Spec No.: –
Design file no: –
Drawing Code: –
File name: $$$$date$$$$
Plot date:
Plot scale: –

DEPARTMENT OF THE ARMY
CORPS OF ENGINEERS
SACRAMENTO, CALIFORNIA

SACRAMENTO DISTRICT
IN-HOUSE DESIGN
1325 "J" STREET
SACRAMENTO, CA 95814-2922

SUTTER & BUTTE COUNTY CALIFORNIA
SUTTER BASIN PILOT FEASIBILITY STUDY
DRAFT REPORT
ALTERNATIVE SB-7 AND SB-8
PROFILE VIEW
STA 725+00 TO 775+00

Sheet reference number:
C-212

VERTICAL DATUM

THE VERTICAL DATUM OF THIS SURVEY IS THE NORTH AMERICAN VERTICAL DATUM OF 1988 (NAVD88) BEING BASED ON NATIONAL GEODETIC SURVEY (NGS) POINTS LISTED AND DERIVED BY GLOBAL POSITIONING SYSTEM (GPS) STATIC METHOD.

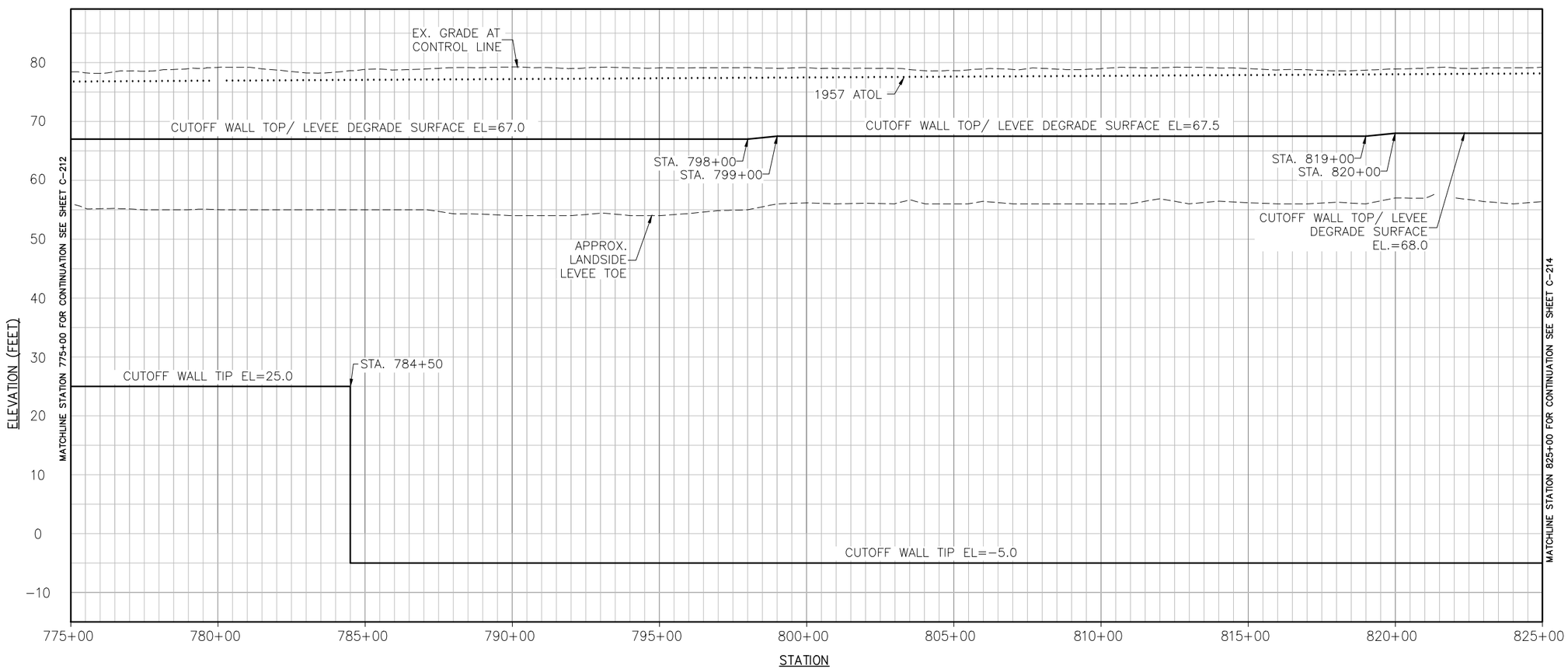

PROFILE

PROFILE
H: 1"=200'
V: 1"=10'

0 200 400

NOT FOR CONSTRUCTION

US Army Corps of Engineers
Sacramento District

Symbol	Description	Date	Approved
DA	DESCRIPTION8	DATE8	APPROVAL8
DA	DESCRIPTION7	DATE7	APPROVAL7
DA	DESCRIPTION6	DATE6	APPROVAL6
DA	DESCRIPTION5	DATE5	APPROVAL5
DA	DESCRIPTION4	DATE4	APPROVAL4
DA	DESCRIPTION3	DATE3	APPROVAL3
DA	DESCRIPTION2	DATE2	APPROVAL2
DA	DESCRIPTION1	DATE1	APPROVAL1

DEPARTMENT OF THE ARMY
CORPS OF ENGINEERS
SACRAMENTO, CALIFORNIA

SACRAMENTO DISTRICT
IN-HOUSE DESIGN
1325 "J" STREET
SACRAMENTO, CA 95814-2922

Designed by: –		Date: –	Rev: –
Dwn by: –	Spec No.: –	Design file no: –	
Reviewed by: –		Drawing Code: –	
Submitted by: –		File name: $$$$date$$$$	
CHIEF, CIV ENGR SDS SEC A		Plot date:	
		Plot scale: –	

SUTTER & BUTTE COUNTY CALIFORNIA
SUTTER BASIN PILOT FEASIBILITY STUDY
DRAFT REPORT
ALTERNATIVE SB-7 AND SB-8
PROFILE VIEW
STA 775+00 TO 825+00

Sheet reference number:
C-213

VERTICAL DATUM

THE VERTICAL DATUM OF THIS SURVEY IS THE NORTH AMERICAN VERTICAL DATUM OF 1988 (NAVD88) BEING BASED ON NATIONAL GEODETIC SURVEY (NGS) POINTS LISTED AND DERIVED BY GLOBAL POSITIONING SYSTEM (GPS) STATIC METHOD.

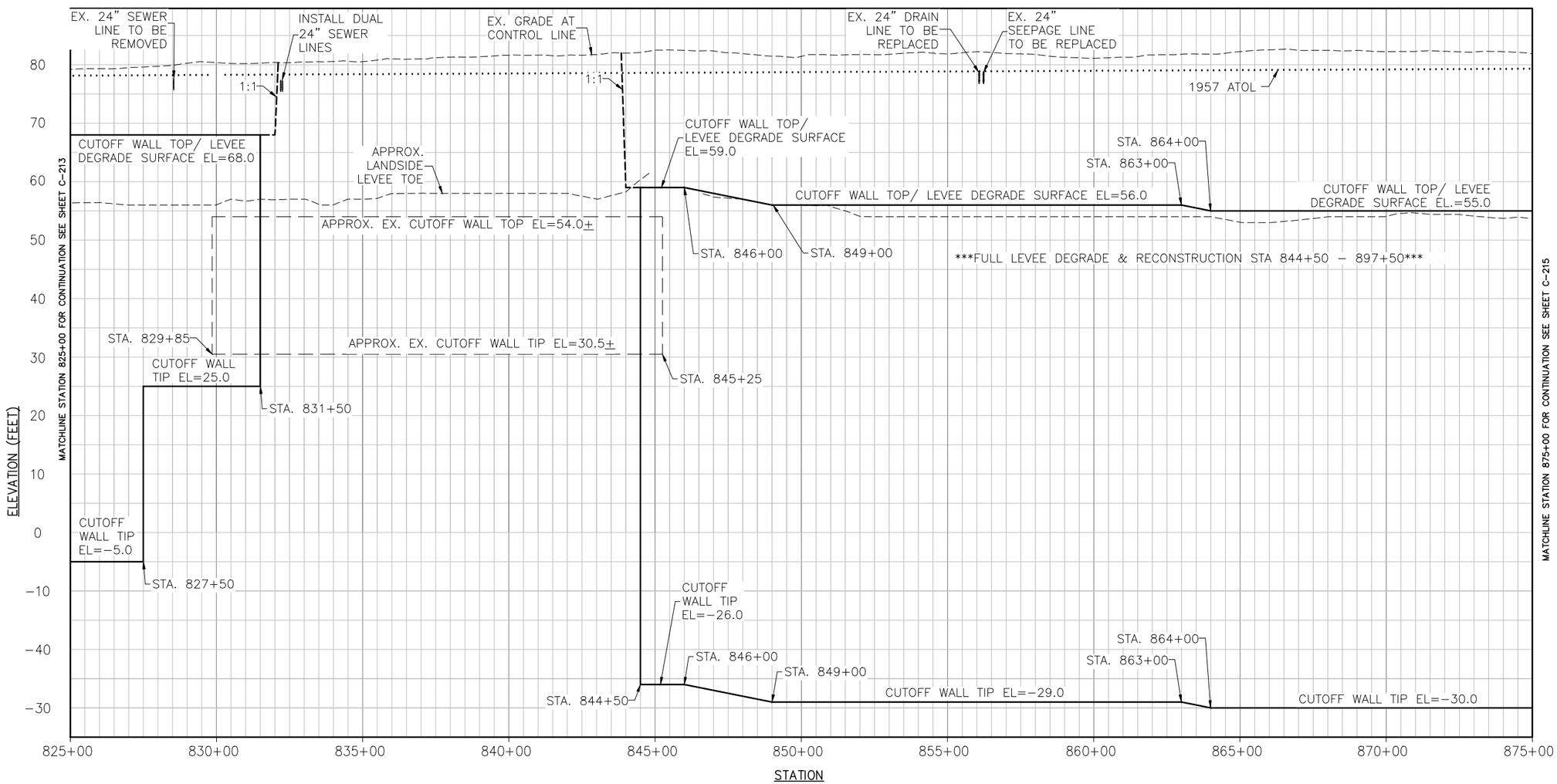

PROFILE

PROFILE
H: 1"=200'
V: 1"=10'

0 200 400

NOT FOR CONSTRUCTION

US Army Corps of Engineers
Sacramento District

Symbol	Description	Date	Approved
0A	DESCRIPTION8	DATE8	APPROVAL8
0A	DESCRIPTION7	DATE7	APPROVAL7
0A	DESCRIPTION6	DATE6	APPROVAL6
0A	DESCRIPTION5	DATE5	APPROVAL5
0A	DESCRIPTION4	DATE4	APPROVAL4
0A	DESCRIPTION3	DATE3	APPROVAL3
0A	DESCRIPTION2	DATE2	APPROVAL2
0A	DESCRIPTION1	DATE1	APPROVAL1

Designed by: –
Dwn by: –
Reviewed by: –
Submitted by: –
CHIEF, DIV ENGR SDS SEC A
Date: –
Spec No.: –
Design File no: –
Drawing Code: –
File name: $$$$date$$$$
Plot date:
Plot scale: –
Rev: –

DEPARTMENT OF THE ARMY
CORPS OF ENGINEERS
SACRAMENTO, CALIFORNIA

SACRAMENTO DISTRICT
IN-HOUSE DESIGN
1325 "J" STREET
SACRAMENTO, CA 95814-2922

SUTTER & BUTTE COUNTY CALIFORNIA
SUTTER BASIN PILOT FEASIBILITY STUDY
DRAFT REPORT
ALTERNATIVE SB-7 AND SB-8
PROFILE VIEW
STA 825+00 TO 875+00

Sheet reference number:
C-214

VERTICAL DATUM

THE VERTICAL DATUM OF THIS SURVEY IS THE NORTH AMERICAN VERTICAL DATUM OF 1988 (NAVD88) BEING BASED ON NATIONAL GEODETIC SURVEY (NGS) POINTS LISTED AND DERIVED BY GLOBAL POSITIONING SYSTEM (GPS) STATIC METHOD.

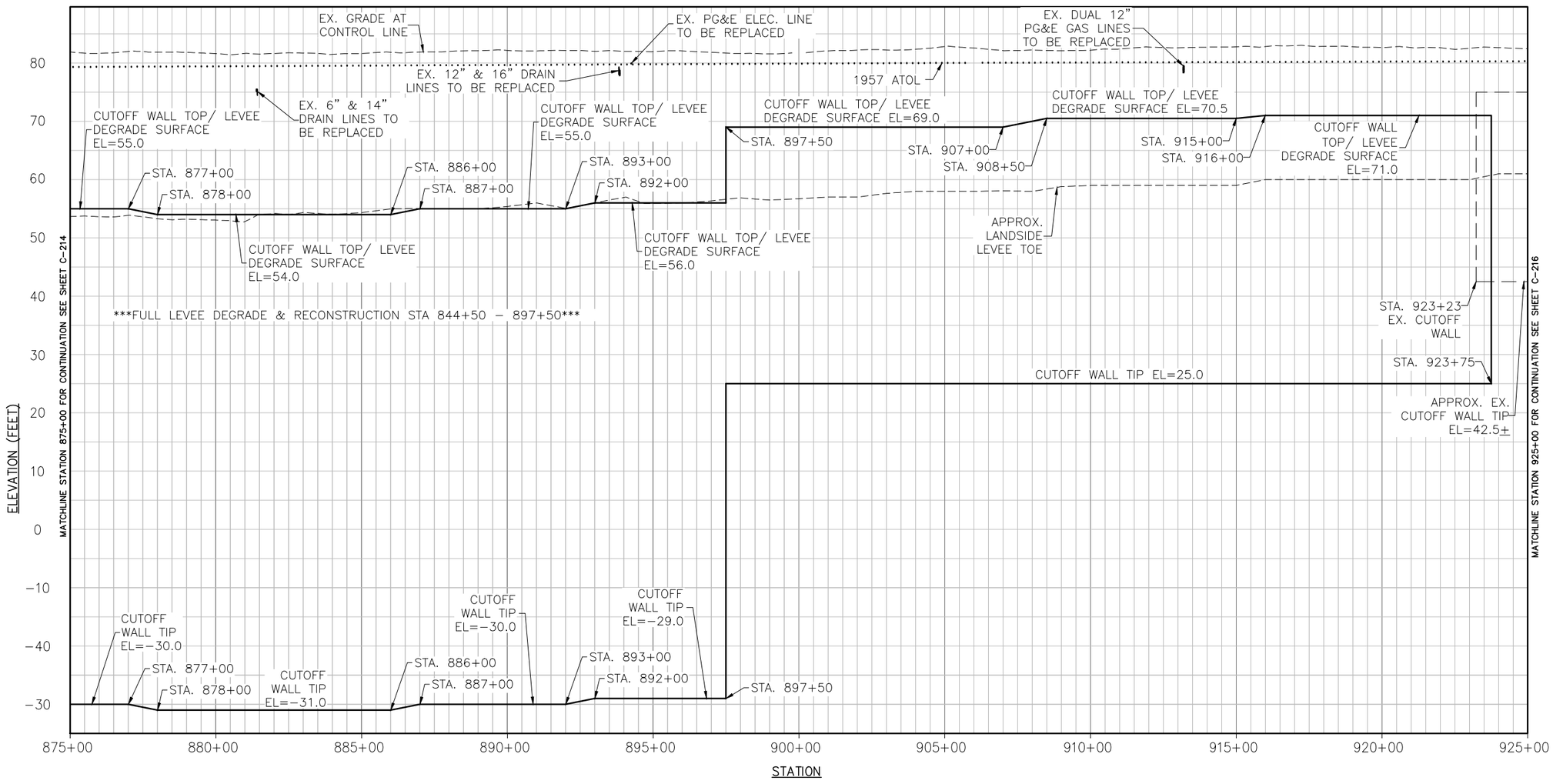

PROFILE

PROFILE
H: 1"=200'
V: 1"=10'

0 200 400

NOT FOR CONSTRUCTION

US Army Corps of Engineers
Sacramento District

Symbol	Description	Date	Approved
0A	DESCRIPTION8	DATE8	APPROVAL8
0A	DESCRIPTION7	DATE7	APPROVAL7
0A	DESCRIPTION6	DATE6	APPROVAL6
0A	DESCRIPTION5	DATE5	APPROVAL5
0A	DESCRIPTION4	DATE4	APPROVAL4
0A	DESCRIPTION3	DATE3	APPROVAL3
0A	DESCRIPTION2	DATE2	APPROVAL2
0A	DESCRIPTION1	DATE1	APPROVAL1

Designed by: –
Dwn by: –
Spec No.: –
Date: –
Rev: –
Design file no: –
Reviewed by: –
Drawing Code: –
Submitted by: –
File name: $$$$date$$$$
Plot date:
Plot scale: –
DRFF, CV, ENGR, BES, SEC, A

DEPARTMENT OF THE ARMY
CORPS OF ENGINEERS
SACRAMENTO, CALIFORNIA

SACRAMENTO DISTRICT
IN-HOUSE DESIGN
1325 "J" STREET
SACRAMENTO, CA 95814-2922

SUTTER & BUTTE COUNTY CALIFORNIA
SUTTER BASIN PILOT FEASIBILITY STUDY
DRAFT REPORT
ALTERNATIVE SB-7 AND SB-8
PROFILE VIEW
STA 875+00 TO 925+00

Sheet reference number:
C-215

VERTICAL DATUM

THE VERTICAL DATUM OF THIS SURVEY IS THE NORTH AMERICAN VERTICAL DATUM OF 1988 (NAVD88) BEING BASED ON NATIONAL GEODETIC SURVEY (NGS) POINTS LISTED AND DERIVED BY GLOBAL POSITIONING SYSTEM (GPS) STATIC METHOD.

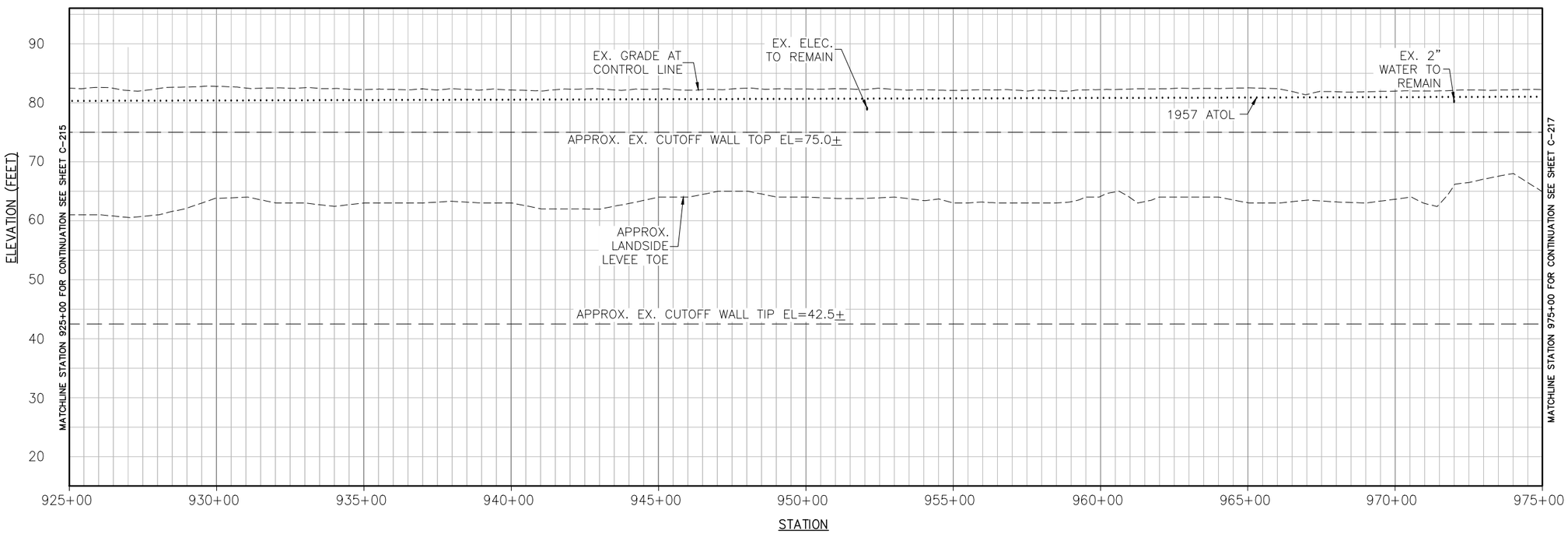

PROFILE

PROFILE
H: 1"=200'
V: 1"=10'

0 200 400

NOT FOR CONSTRUCTION

US Army Corps of Engineers
Sacramento District

Symbol	Description	Date	Approved
0A	DESCRIPTION8	DATE8	APPROVAL8
0A	DESCRIPTION7	DATE7	APPROVAL7
0A	DESCRIPTION6	DATE6	APPROVAL6
0A	DESCRIPTION5	DATE5	APPROVAL5
0A	DESCRIPTION4	DATE4	APPROVAL4
0A	DESCRIPTION3	DATE3	APPROVAL3
0A	DESCRIPTION2	DATE2	APPROVAL2
0A	DESCRIPTION1	DATE1	APPROVAL1

Designed by: – | Date: – | Rev: –
Dwn by: – | Spec No.: – | Design file no: –
Reviewed by: – | Drawing Code: –
Submitted by: – | File name: | Plot date: $$$$date$$$$ | Plot scale: –
CHIEF, CIV ENGR DES SEC A

DEPARTMENT OF THE ARMY
CORPS OF ENGINEERS
SACRAMENTO, CALIFORNIA

SACRAMENTO DISTRICT
IN-HOUSE DESIGN
1325 "J" STREET
SACRAMENTO, CA 95814-2922

SUTTER & BUTTE COUNTY CALIFORNIA
SUTTER BASIN PILOT FEASIBILITY STUDY
DRAFT REPORT
ALTERNATIVE SB-7 AND SB-8
PROFILE VIEW
STA 925+00 TO 975+00

Sheet reference number:
C-216

VERTICAL DATUM

THE VERTICAL DATUM OF THIS SURVEY IS THE NORTH AMERICAN VERTICAL DATUM OF 1988 (NAVD88) BEING BASED ON NATIONAL GEODETIC SURVEY (NGS) POINTS LISTED AND DERIVED BY GLOBAL POSITIONING SYSTEM (GPS) STATIC METHOD.

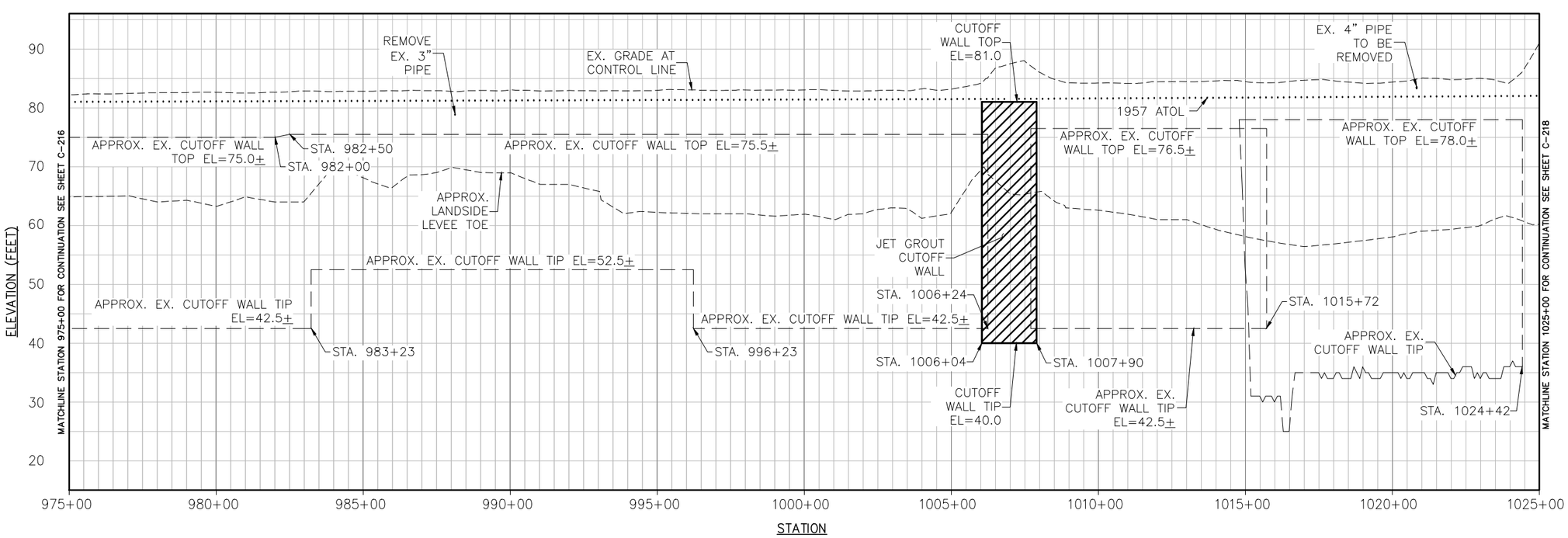

PROFILE

PROFILE
H: 1"=200'
V: 1"=10'

0 200 400

NOT FOR CONSTRUCTION

US Army Corps of Engineers
Sacramento District

Symbol	Description	Date	Approved
0A	DESCRIPTION8	DATE8	APPROVAL8
0A	DESCRIPTION7	DATE7	APPROVAL7
0A	DESCRIPTION6	DATE6	APPROVAL6
0A	DESCRIPTION5	DATE5	APPROVAL5
0A	DESCRIPTION4	DATE4	APPROVAL4
0A	DESCRIPTION3	DATE3	APPROVAL3
0A	DESCRIPTION2	DATE2	APPROVAL2
0A	DESCRIPTION1	DATE1	APPROVAL1

Designed by: –
Dwn by: –
Spec No.: –
Reviewed by: –
Submitted by: –
CHIEF, CIV ENGR DES SEC A
Date: –
Rev: –
Design file no: –
Drawing Code: –
File name: $$$$date$$$$
Plot date:
Plot scale: –

DEPARTMENT OF THE ARMY
CORPS OF ENGINEERS
SACRAMENTO, CALIFORNIA

SACRAMENTO DISTRICT
IN-HOUSE DESIGN
1325 "J" STREET
SACRAMENTO, CA 95814-2922

SUTTER & BUTTE COUNTY CALIFORNIA
SUTTER BASIN PILOT FEASIBILITY STUDY
DRAFT REPORT
ALTERNATIVE SB-7 AND SB-8
PROFILE VIEW
STA 975+00 TO 1025+00

Sheet reference number:
C-217

VERTICAL DATUM

THE VERTICAL DATUM OF THIS SURVEY IS THE NORTH AMERICAN VERTICAL DATUM OF 1988 (NAVD88) BEING BASED ON NATIONAL GEODETIC SURVEY (NGS) POINTS LISTED AND DERIVED BY GLOBAL POSITIONING SYSTEM (GPS) STATIC METHOD.

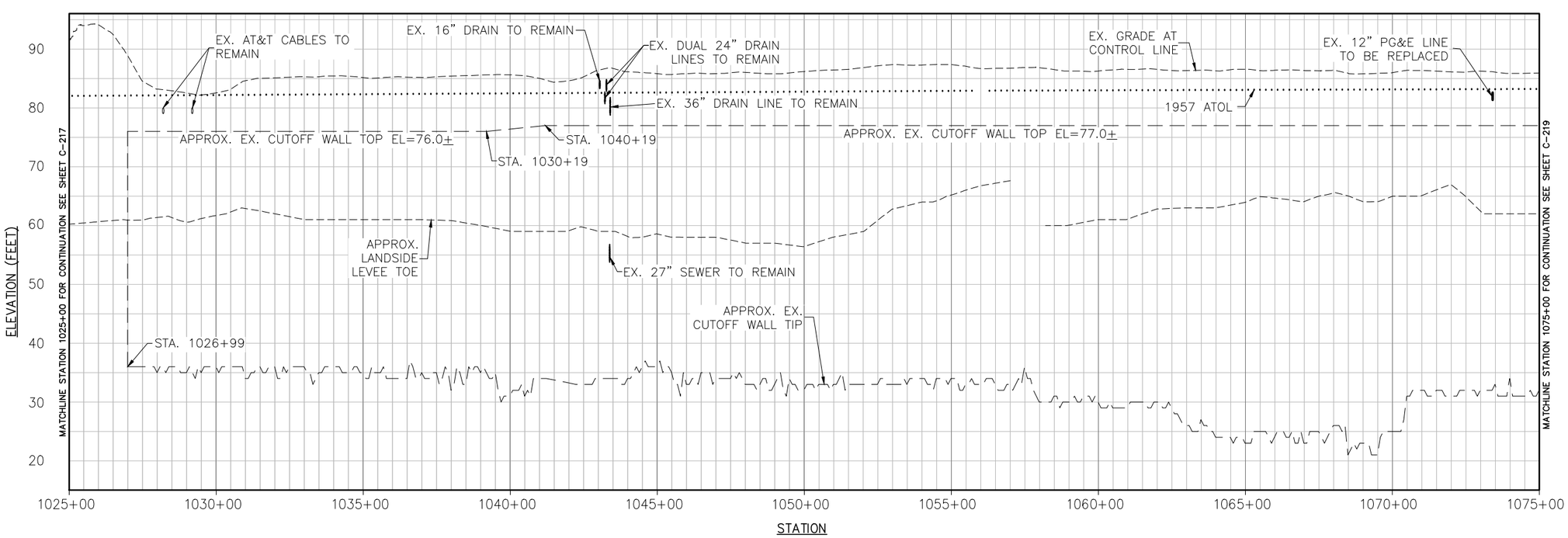

PROFILE

PROFILE
H: 1"=200'
V: 1"=10'

0 200 400

NOT FOR CONSTRUCTION

US Army Corps of Engineers
Sacramento District

Symbol	Description	Date	Approved
8	DESCRIPTION8	DATE8	APPROVAL8
7	DESCRIPTION7	DATE7	APPROVAL7
6	DESCRIPTION6	DATE6	APPROVAL6
5	DESCRIPTION5	DATE5	APPROVAL5
4	DESCRIPTION4	DATE4	APPROVAL4
3	DESCRIPTION3	DATE3	APPROVAL3
2	DESCRIPTION2	DATE2	APPROVAL2
1	DESCRIPTION1	DATE1	APPROVAL1

Designed by: –
Dwn by: –
Spec No.: –
Reviewed by: –
Submitted by: –
CHIEF, CIV ENGR DES SEC A
Date: –
Rev: –
Design file no: –
Drawing Code: –
File name: $$$$date$$$$
Plot date:
Plot scale: –

DEPARTMENT OF THE ARMY
CORPS OF ENGINEERS
SACRAMENTO, CALIFORNIA

SACRAMENTO DISTRICT
IN-HOUSE DESIGN
1325 "J" STREET
SACRAMENTO, CA 95814-2922

SUTTER & BUTTE COUNTY CALIFORNIA
SUTTER BASIN PILOT FEASIBILITY STUDY
DRAFT REPORT
ALTERNATIVE SB-7 AND SB-8
PROFILE VIEW
STA 1025+00 TO 1075+00

Sheet reference number:
C-218

VERTICAL DATUM

THE VERTICAL DATUM OF THIS SURVEY IS THE NORTH AMERICAN VERTICAL DATUM OF 1988 (NAVD88) BEING BASED ON NATIONAL GEODETIC SURVEY (NGS) POINTS LISTED AND DERIVED BY GLOBAL POSITIONING SYSTEM (GPS) STATIC METHOD.

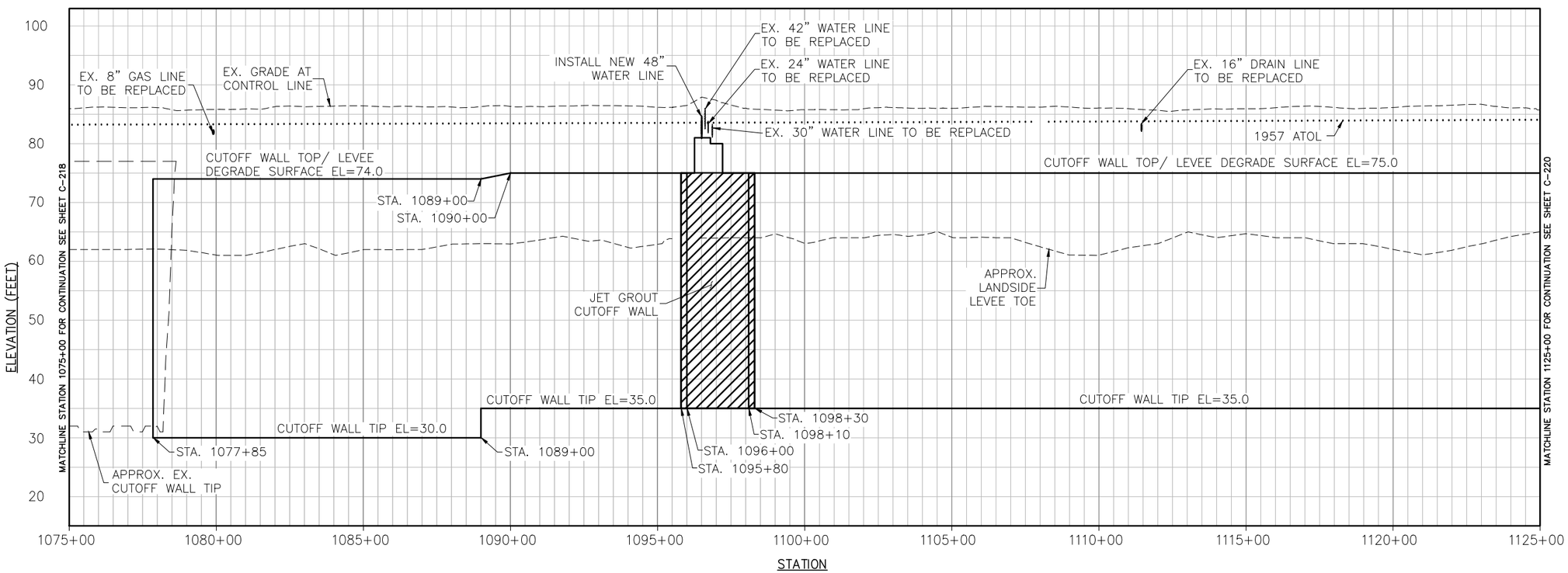

PROFILE

PROFILE
H: 1"=200'
V: 1"=10'

0 200 400

NOT FOR CONSTRUCTION

US Army Corps of Engineers
Sacramento District

Symbol	Description	Date	Approved
DA	DESCRIPTION8	DATE8	APPROVAL8
DA	DESCRIPTION7	DATE7	APPROVAL7
DA	DESCRIPTION6	DATE6	APPROVAL6
DA	DESCRIPTION5	DATE5	APPROVAL5
DA	DESCRIPTION4	DATE4	APPROVAL4
DA	DESCRIPTION3	DATE3	APPROVAL3
DA	DESCRIPTION2	DATE2	APPROVAL2
DA	DESCRIPTION1	DATE1	APPROVAL1

Designed by: –
Dwn by: –
Spec No.: –
Reviewed by: –
Submitted by: –
CHIEF, CIV ENGR SDS SEC A
Date: –
Design file no: –
Drawing Code: –
File name: $$$$date$$$$
Plot date:
Plot scale: –
Rev: –

DEPARTMENT OF THE ARMY
CORPS OF ENGINEERS
SACRAMENTO, CALIFORNIA

SACRAMENTO DISTRICT
IN-HOUSE DESIGN
1325 "J" STREET
SACRAMENTO, CA 95814-2922

SUTTER & BUTTE COUNTY CALIFORNIA
SUTTER BASIN PILOT FEASIBILITY STUDY
DRAFT REPORT
ALTERNATIVE SB-7 AND SB-8
PROFILE VIEW
STA 1075+00 TO 1125+00

Sheet reference number:
C-219

VERTICAL DATUM

THE VERTICAL DATUM OF THIS SURVEY IS THE NORTH AMERICAN VERTICAL DATUM OF 1988 (NAVD88) BEING BASED ON NATIONAL GEODETIC SURVEY (NGS) POINTS LISTED AND DERIVED BY GLOBAL POSITIONING SYSTEM (GPS) STATIC METHOD.

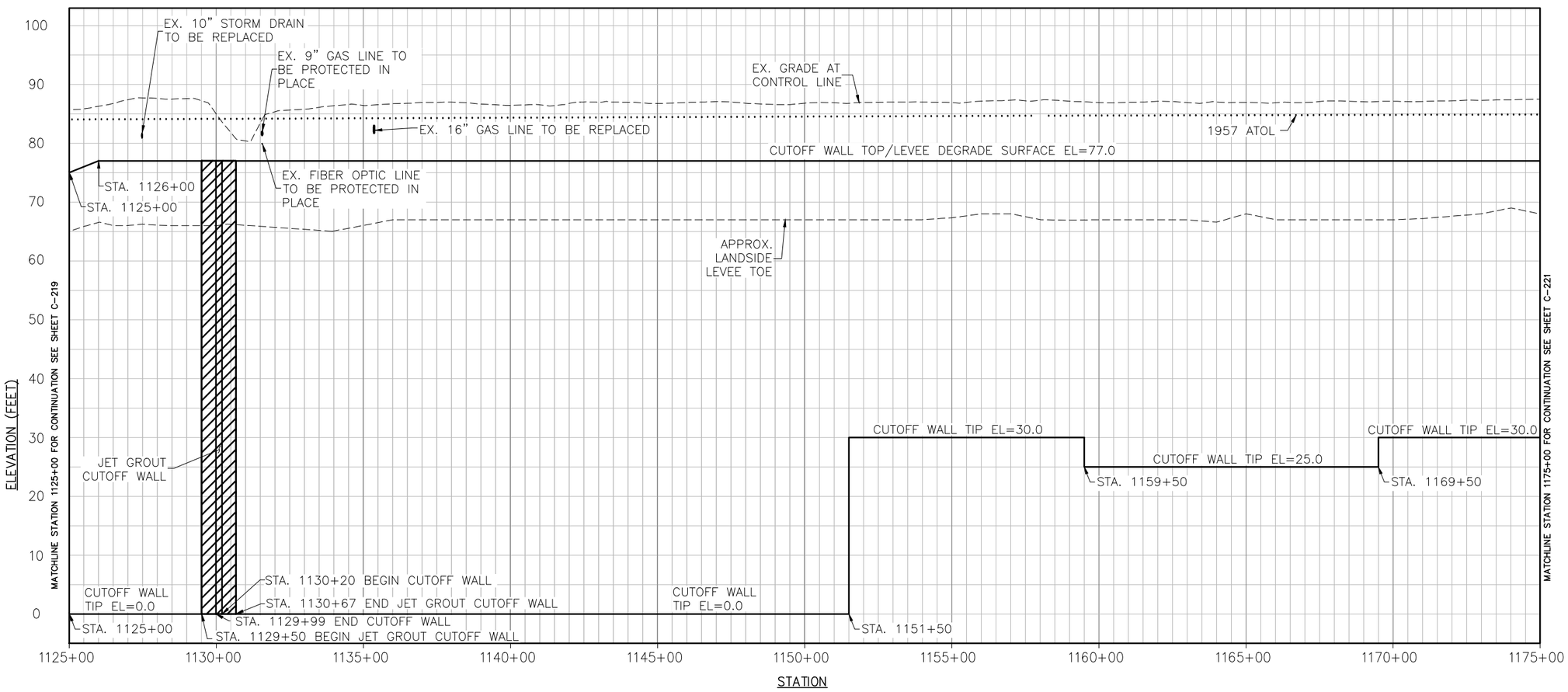

PROFILE

PROFILE
H: 1"=200'
V: 1"=10'

0 200 400

NOT FOR CONSTRUCTION

US Army Corps of Engineers
Sacramento District

Symbol	Description	Date	Approved
DA	DESCRIPTION8	DATE8	APPROVAL8
DA	DESCRIPTION7	DATE7	APPROVAL7
DA	DESCRIPTION6	DATE6	APPROVAL6
DA	DESCRIPTION5	DATE5	APPROVAL5
DA	DESCRIPTION4	DATE4	APPROVAL4
DA	DESCRIPTION3	DATE3	APPROVAL3
DA	DESCRIPTION2	DATE2	APPROVAL2
DA	DESCRIPTION1	DATE1	APPROVAL1

Designed by: –
Dwn by: –
Reviewed by: –
Submitted by: –
Date: –
Spec No.: –
Design file no: –
Drawing Code: –
File name: $$$$date+$$$$
Plot date:
Plot scale: –
CWBS: OV EWR DES SEC A

DEPARTMENT OF THE ARMY
CORPS OF ENGINEERS
SACRAMENTO, CALIFORNIA

SACRAMENTO DISTRICT
IN-HOUSE DESIGN
1325 "J" STREET
SACRAMENTO, CA 95814-2922

SUTTER & BUTTE COUNTY CALIFORNIA
SUTTER BASIN PILOT FEASIBILITY STUDY
DRAFT REPORT
ALTERNATIVE SB-7 AND SB-8
PROFILE VIEW
STA 1125+00 TO 1175+00

Sheet reference number:
C-220

VERTICAL DATUM

THE VERTICAL DATUM OF THIS SURVEY IS THE NORTH AMERICAN VERTICAL DATUM OF 1988 (NAVD88) BEING BASED ON NATIONAL GEODETIC SURVEY (NGS) POINTS LISTED AND DERIVED BY GLOBAL POSITIONING SYSTEM (GPS) STATIC METHOD.

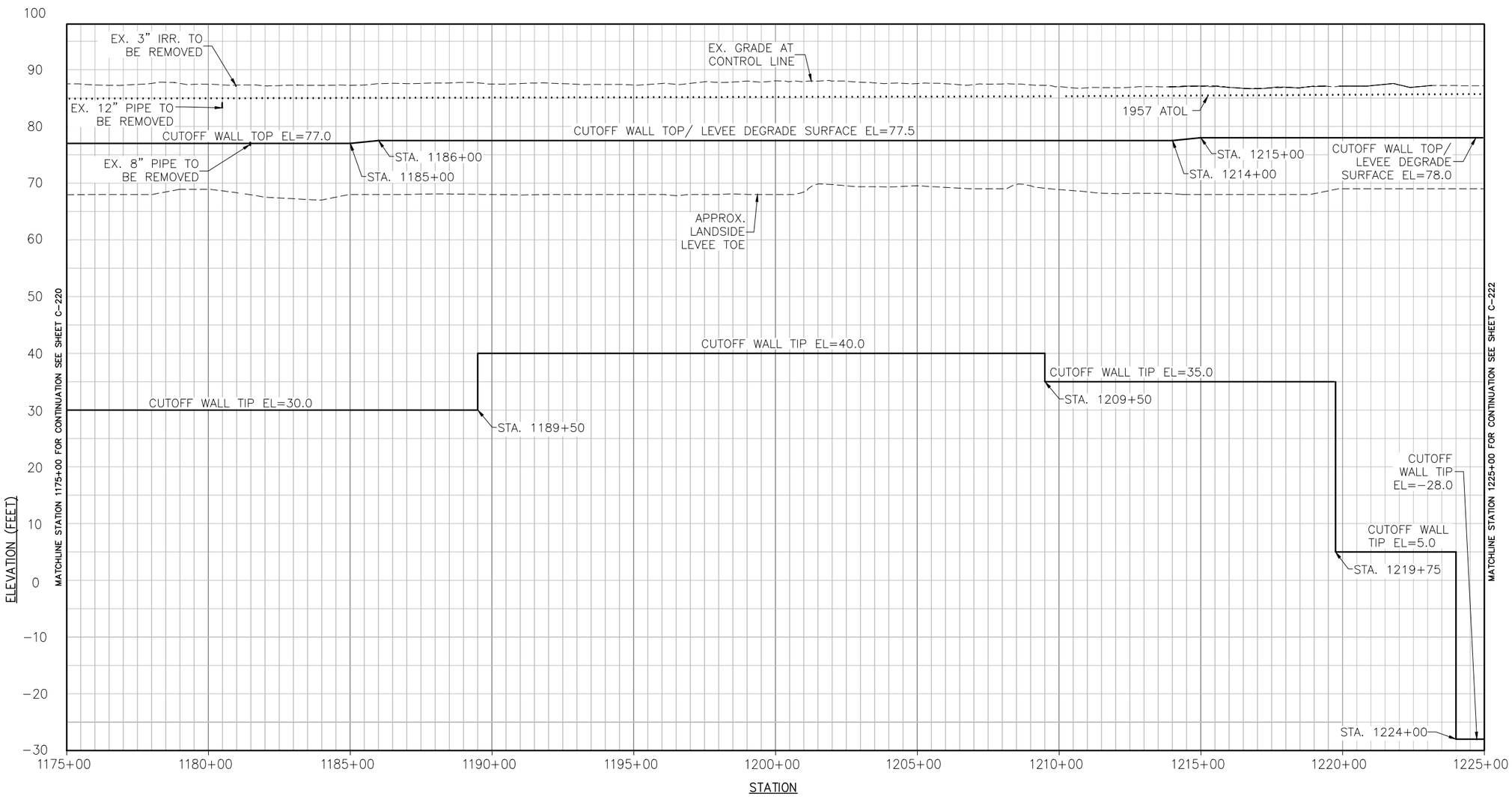

PROFILE

PROFILE
H: 1"=200'
V: 1"=10'

0 200 400

NOT FOR CONSTRUCTION

US Army Corps of Engineers
Sacramento District

Symbol	Description	Date	Approved
0A	DESCRIPTION8	DATE8	APPROVAL8
0A	DESCRIPTION7	DATE7	APPROVAL7
0A	DESCRIPTION6	DATE6	APPROVAL6
0A	DESCRIPTION5	DATE5	APPROVAL5
0A	DESCRIPTION4	DATE4	APPROVAL4
0A	DESCRIPTION3	DATE3	APPROVAL3
0A	DESCRIPTION2	DATE2	APPROVAL2
0A	DESCRIPTION1	DATE1	APPROVAL1

Designed by: – Date: – Rev: –
Dwn by: – Spec No.: – Design file no: –
Reviewed by: – Drawing Code: –
Submitted by: – File name: $$$$date$$$$
CHIEF, CIV ENGR DES SEC A Plot scale: –

DEPARTMENT OF THE ARMY
CORPS OF ENGINEERS
SACRAMENTO, CALIFORNIA

SACRAMENTO DISTRICT
IN-HOUSE DESIGN
1325 "J" STREET
SACRAMENTO, CA 95814-2922

SUTTER & BUTTE COUNTY CALIFORNIA
SUTTER BASIN PILOT FEASIBILITY STUDY
DRAFT REPORT
ALTERNATIVE SB-7 AND SB-8
PROFILE VIEW
STA 1175+00 TO 1225+00

Sheet reference number:
C-221

VERTICAL DATUM

THE VERTICAL DATUM OF THIS SURVEY IS THE NORTH AMERICAN VERTICAL DATUM OF 1988 (NAVD88) BEING BASED ON NATIONAL GEODETIC SURVEY (NGS) POINTS LISTED AND DERIVED BY GLOBAL POSITIONING SYSTEM (GPS) STATIC METHOD.

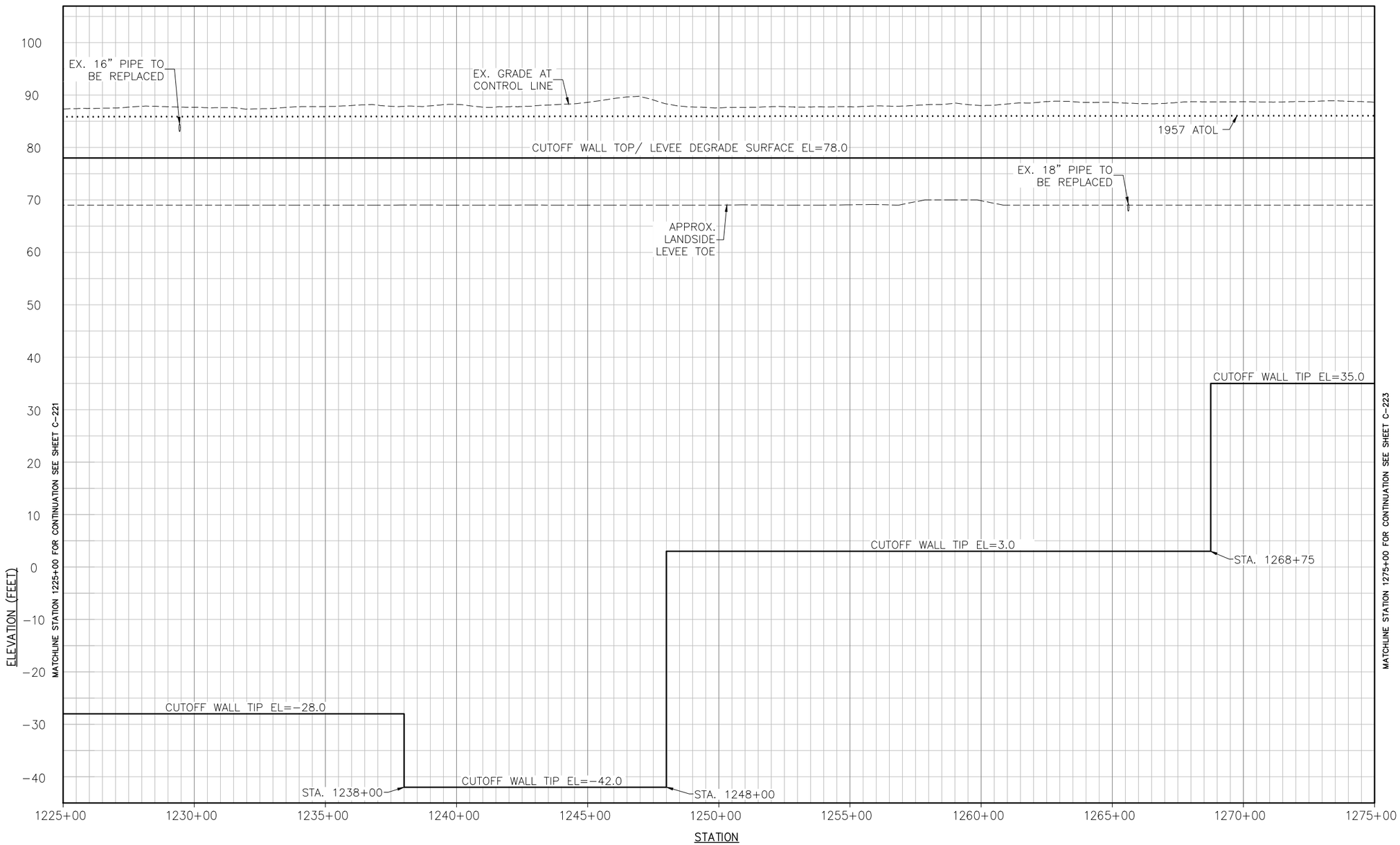

PROFILE

PROFILE
H: 1"=200'
V: 1"=10'

0 200 400

NOT FOR CONSTRUCTION

US Army Corps of Engineers
Sacramento District

Symbol	Description	Date	Approved
0A	DESCRIPTION8	DATE8	APPROVAL8
0A	DESCRIPTION7	DATE7	APPROVAL7
0A	DESCRIPTION6	DATE6	APPROVAL6
0A	DESCRIPTION5	DATE5	APPROVAL5
0A	DESCRIPTION4	DATE4	APPROVAL4
0A	DESCRIPTION3	DATE3	APPROVAL3
0A	DESCRIPTION2	DATE2	APPROVAL2
0A	DESCRIPTION1	DATE1	APPROVAL1

Designed by: –
Dwn by: –
Spec No.: –
Reviewed by: –
Submitted by: –
CHIEF, CIV ENGR DES SEC A
Date: –
Rev: –
Design file no: –
Drawing Code: –
File name: $$$$date$$$$
Plot date:
Plot scale: –

DEPARTMENT OF THE ARMY
CORPS OF ENGINEERS
SACRAMENTO, CALIFORNIA

SACRAMENTO DISTRICT
IN-HOUSE DESIGN
1325 "J" STREET
SACRAMENTO, CA 95814-2922

SUTTER & BUTTE COUNTY CALIFORNIA
SUTTER BASIN PILOT FEASIBILITY STUDY
DRAFT REPORT
ALTERNATIVE SB-7 AND SB-8
PROFILE VIEW
STA 1225+00 TO 1275+00

Sheet reference number:
C-222

VERTICAL DATUM

THE VERTICAL DATUM OF THIS SURVEY IS THE NORTH AMERICAN VERTICAL DATUM OF 1988 (NAVD88) BEING BASED ON NATIONAL GEODETIC SURVEY (NGS) POINTS LISTED AND DERIVED BY GLOBAL POSITIONING SYSTEM (GPS) STATIC METHOD.

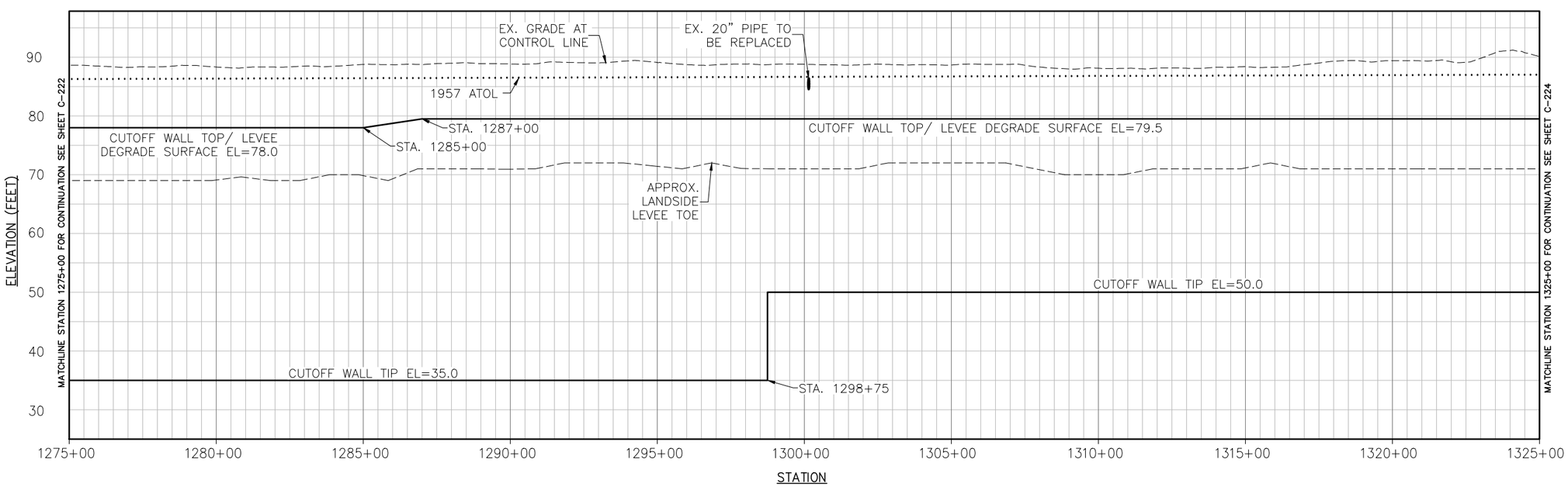

PROFILE

PROFILE
H: 1"=200'
V: 1"=10'

0 200 400

NOT FOR CONSTRUCTION

US Army Corps of Engineers
Sacramento District

Symbol	Description	Date	Approved
0	DESCRIPTION8	DATE8	APPROVAL8
0	DESCRIPTION7	DATE7	APPROVAL7
0	DESCRIPTION6	DATE6	APPROVAL6
0	DESCRIPTION5	DATE5	APPROVAL5
0	DESCRIPTION4	DATE4	APPROVAL4
0	DESCRIPTION3	DATE3	APPROVAL3
0	DESCRIPTION2	DATE2	APPROVAL2
0	DESCRIPTION1	DATE1	APPROVAL1

Designed by: –
Dwn by: –
Spec No.: –
Reviewed by: –
Submitted by: –
CHIEF, CIV ENGR DES SEC A
Date: –
Rev: –
Design File no: –
Drawing Code: –
File name: $$$$date$$$$
Plot date:
Plot scale: –

DEPARTMENT OF THE ARMY
CORPS OF ENGINEERS
SACRAMENTO, CALIFORNIA

SACRAMENTO DISTRICT
IN-HOUSE DESIGN
1325 "J" STREET
SACRAMENTO, CA 95814-2922

SUTTER & BUTTE COUNTY CALIFORNIA
SUTTER BASIN PILOT FEASIBILITY STUDY
DRAFT REPORT
ALTERNATIVE SB-7 AND SB-8
PROFILE VIEW
STA 1275+00 TO 1325+00

Sheet reference number:
C-223

VERTICAL DATUM

THE VERTICAL DATUM OF THIS SURVEY IS THE NORTH AMERICAN VERTICAL DATUM OF 1988 (NAVD88) BEING BASED ON NATIONAL GEODETIC SURVEY (NGS) POINTS LISTED AND DERIVED BY GLOBAL POSITIONING SYSTEM (GPS) STATIC METHOD.

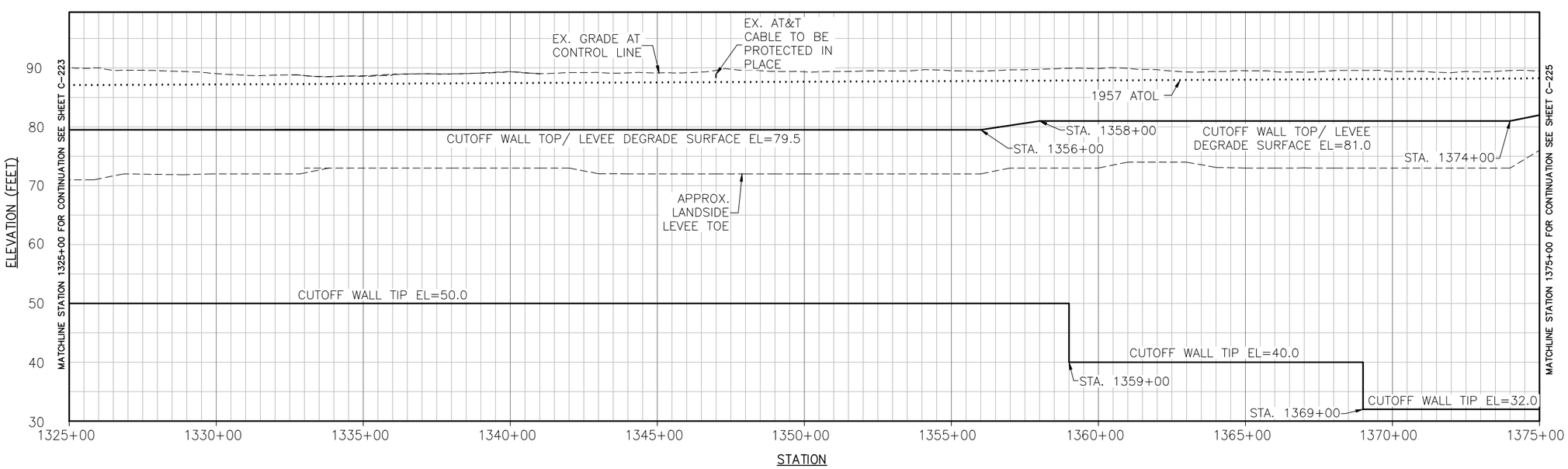

PROFILE

PROFILE
H: 1"=200'
V: 1"=10'

0 200 400

NOT FOR CONSTRUCTION

US Army Corps of Engineers
Sacramento District

Symbol	Description	Date	Approved
8	DESCRIPTION8	DATE8	APPROVAL8
7	DESCRIPTION7	DATE7	APPROVAL7
6	DESCRIPTION6	DATE6	APPROVAL6
5	DESCRIPTION5	DATE5	APPROVAL5
4	DESCRIPTION4	DATE4	APPROVAL4
3	DESCRIPTION3	DATE3	APPROVAL3
2	DESCRIPTION2	DATE2	APPROVAL2
1	DESCRIPTION1	DATE1	APPROVAL1

Designed by: – | Date: – | Rev: –
Dwn by: – | Spec No.: – | Design file no: –
Reviewed by: – | Drawing Code: –
Submitted by: – | File name: $$$$date$$$$
Plot date: | Plot scale: –
CHIEF, CIV ENGR DES SEC A

DEPARTMENT OF THE ARMY
CORPS OF ENGINEERS
SACRAMENTO, CALIFORNIA

SACRAMENTO DISTRICT
IN-HOUSE DESIGN
1325 "J" STREET
SACRAMENTO, CA 95814-2922

SUTTER & BUTTE COUNTY CALIFORNIA
SUTTER BASIN PILOT FEASIBILITY STUDY
DRAFT REPORT
ALTERNATIVE SB-7 AND SB-8
PROFILE VIEW
STA 1325+00 TO 1375+00

Sheet reference number:
C-224

VERTICAL DATUM

THE VERTICAL DATUM OF THIS SURVEY IS THE NORTH AMERICAN VERTICAL DATUM OF 1988 (NAVD88) BEING BASED ON NATIONAL GEODETIC SURVEY (NGS) POINTS LISTED AND DERIVED BY GLOBAL POSITIONING SYSTEM (GPS) STATIC METHOD.

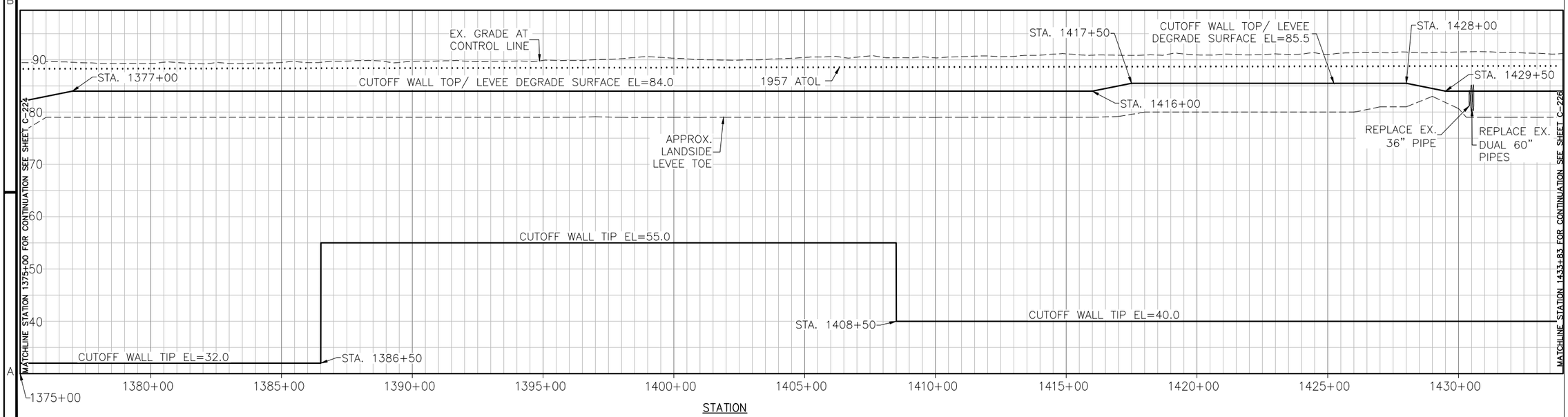

STATION

PROFILE

PROFILE
H: 1"=200'
V: 1"=10'

0 200 400

NOT FOR CONSTRUCTION

US Army Corps of Engineers
Sacramento District

Symbol	Description	Date	Approved
8	DESCRIPTION8	DATE8	APPROVAL8
7	DESCRIPTION7	DATE7	APPROVAL7
6	DESCRIPTION6	DATE6	APPROVAL6
5	DESCRIPTION5	DATE5	APPROVAL5
4	DESCRIPTION4	DATE4	APPROVAL4
3	DESCRIPTION3	DATE3	APPROVAL3
2	DESCRIPTION2	DATE2	APPROVAL2
1	DESCRIPTION1	DATE1	APPROVAL1

Designed by: –
Dwn by: –
Spec No.: –
Reviewed by: –
Submitted by: –
CHIEF, CIV ENGR DES SEC A
Date: –
Design file no: –
Drawing Code: –
File name: $$$$date$$$$
Plot date:
Plot scale: –
Rev: –

DEPARTMENT OF THE ARMY
CORPS OF ENGINEERS
SACRAMENTO, CALIFORNIA

SACRAMENTO DISTRICT
IN-HOUSE DESIGN
1325 "J" STREET
SACRAMENTO, CA 95814-2922

SUTTER & BUTTE COUNTY CALIFORNIA
SUTTER BASIN PILOT FEASIBILITY STUDY
DRAFT REPORT
ALTERNATIVE SB-7 AND SB-8
PROFILE VIEW
STA 1375+00 TO 1433+83

Sheet reference number:
C-225

VERTICAL DATUM

THE VERTICAL DATUM OF THIS SURVEY IS THE NORTH AMERICAN VERTICAL DATUM OF 1988 (NAVD88) BEING BASED ON NATIONAL GEODETIC SURVEY (NGS) POINTS LISTED AND DERIVED BY GLOBAL POSITIONING SYSTEM (GPS) STATIC METHOD.

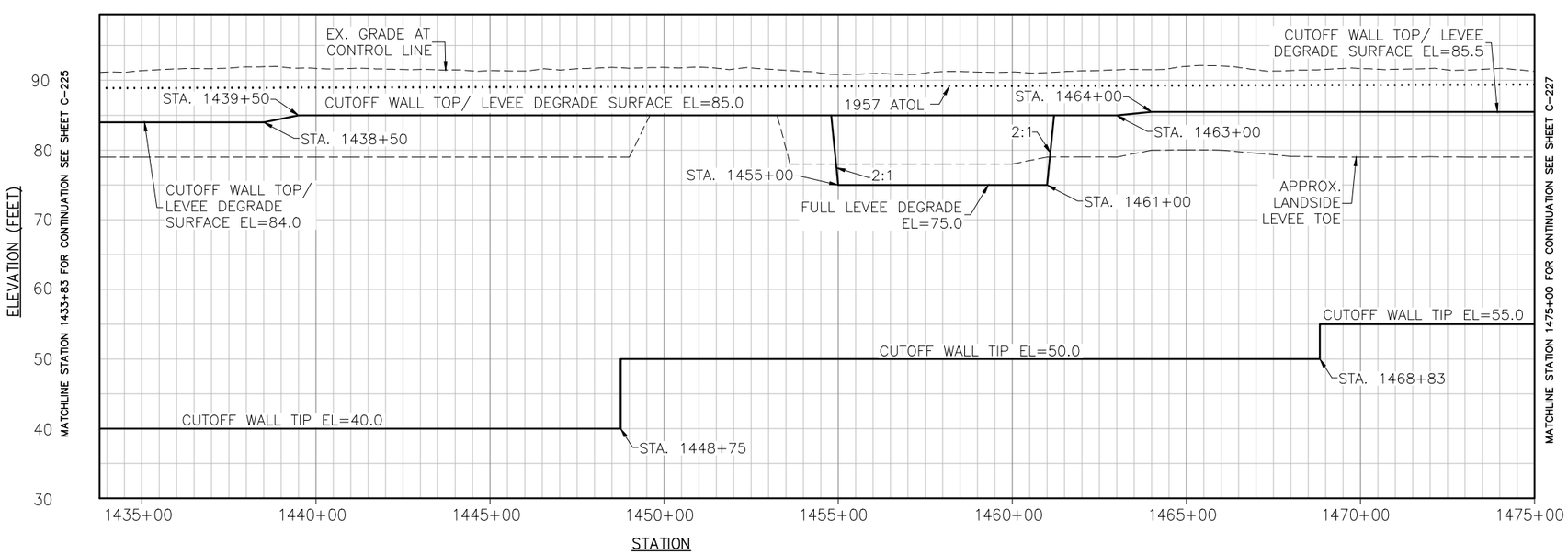

PROFILE

PROFILE
H: 1"=200'
V: 1"=10'

0 200 400

NOT FOR CONSTRUCTION

US Army Corps of Engineers
Sacramento District

Symbol	Description	Date	Approved
0A	DESCRIPTION8	DATE8	APPROVAL8
0A	DESCRIPTION7	DATE7	APPROVAL7
0A	DESCRIPTION6	DATE6	APPROVAL6
0A	DESCRIPTION5	DATE5	APPROVAL5
0A	DESCRIPTION4	DATE4	APPROVAL4
0A	DESCRIPTION3	DATE3	APPROVAL3
0A	DESCRIPTION2	DATE2	APPROVAL2
0A	DESCRIPTION1	DATE1	APPROVAL1

Designed by: – Date: –
Dwn by: – Spec No.: – Design file no: –
Reviewed by: – Drawing Code: –
Submitted by: – File name: $$$$date$$$$
Plot date:
Plot scale: –
CHIEF, CIV ENGR DES SEC A

DEPARTMENT OF THE ARMY
CORPS OF ENGINEERS
SACRAMENTO, CALIFORNIA

SACRAMENTO DISTRICT
IN-HOUSE DESIGN
1325 "J" STREET
SACRAMENTO, CA 95814-2922

SUTTER & BUTTE COUNTY CALIFORNIA
SUTTER BASIN PILOT FEASIBILITY STUDY
DRAFT REPORT
ALTERNATIVE SB-8
PROFILE VIEW
STA 1433+83 TO 1475+00

Sheet reference number:
C-226

VERTICAL DATUM

THE VERTICAL DATUM OF THIS SURVEY IS THE NORTH AMERICAN VERTICAL DATUM OF 1988 (NAVD88) BEING BASED ON NATIONAL GEODETIC SURVEY (NGS) POINTS LISTED AND DERIVED BY GLOBAL POSITIONING SYSTEM (GPS) STATIC METHOD.

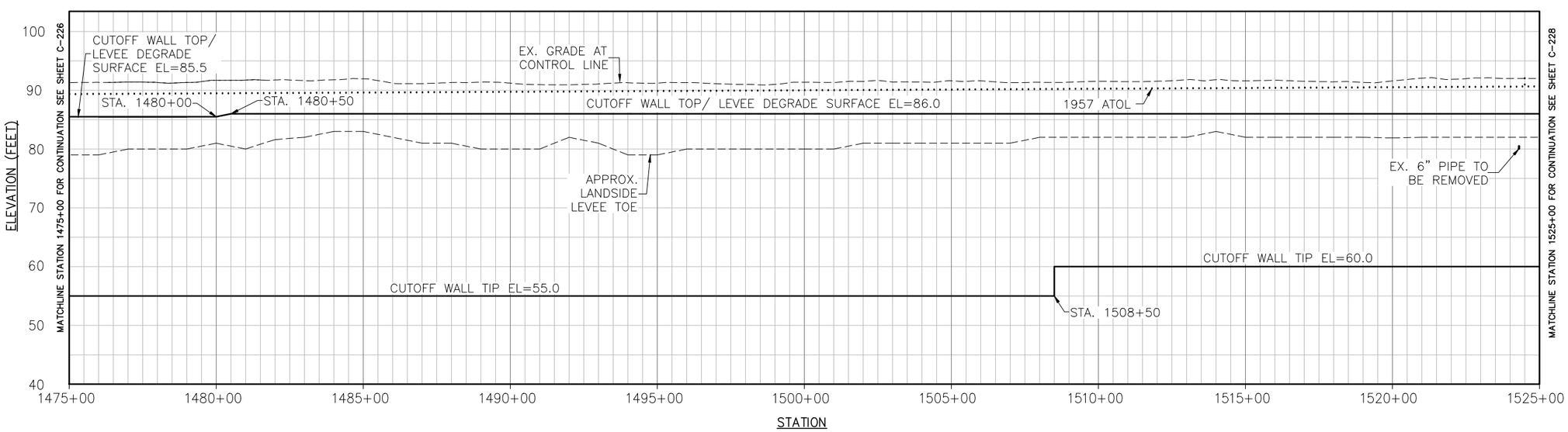

PROFILE

PROFILE
H: 1"=200'
V: 1"=10'

0 200 400

NOT FOR CONSTRUCTION

US Army Corps of Engineers
Sacramento District

Symbol	Description	Date	Approved
0	DESCRIPTION1	DATE1	APPROVAL1
0	DESCRIPTION2	DATE2	APPROVAL2
0	DESCRIPTION3	DATE3	APPROVAL3
0	DESCRIPTION4	DATE4	APPROVAL4
0	DESCRIPTION5	DATE5	APPROVAL5
0	DESCRIPTION6	DATE6	APPROVAL6
0	DESCRIPTION7	DATE7	APPROVAL7
0	DESCRIPTION8	DATE8	APPROVAL8

Designed by: –
Dwn by: –
Spec No.: –
Reviewed by: –
Submitted by: –
CHIEF, CIV ENGR DES SEC A
Date: –
Rev: –
Design File no: –
Drawing Code: –
File name: $$$$date$$$$
Plot date:
Plot scale: –

DEPARTMENT OF THE ARMY
CORPS OF ENGINEERS
SACRAMENTO, CALIFORNIA

SACRAMENTO DISTRICT
IN-HOUSE DESIGN
1325 "J" STREET
SACRAMENTO, CA 95814-2922

SUTTER & BUTTE COUNTY CALIFORNIA
SUTTER BASIN PILOT FEASIBILITY STUDY
DRAFT REPORT
ALTERNATIVE SB-8
PROFILE VIEW
STA 1475+00 TO 1525+00

Sheet reference number:
C-227

VERTICAL DATUM

THE VERTICAL DATUM OF THIS SURVEY IS THE NORTH AMERICAN VERTICAL DATUM OF 1988 (NAVD88) BEING BASED ON NATIONAL GEODETIC SURVEY (NGS) POINTS LISTED AND DERIVED BY GLOBAL POSITIONING SYSTEM (GPS) STATIC METHOD.

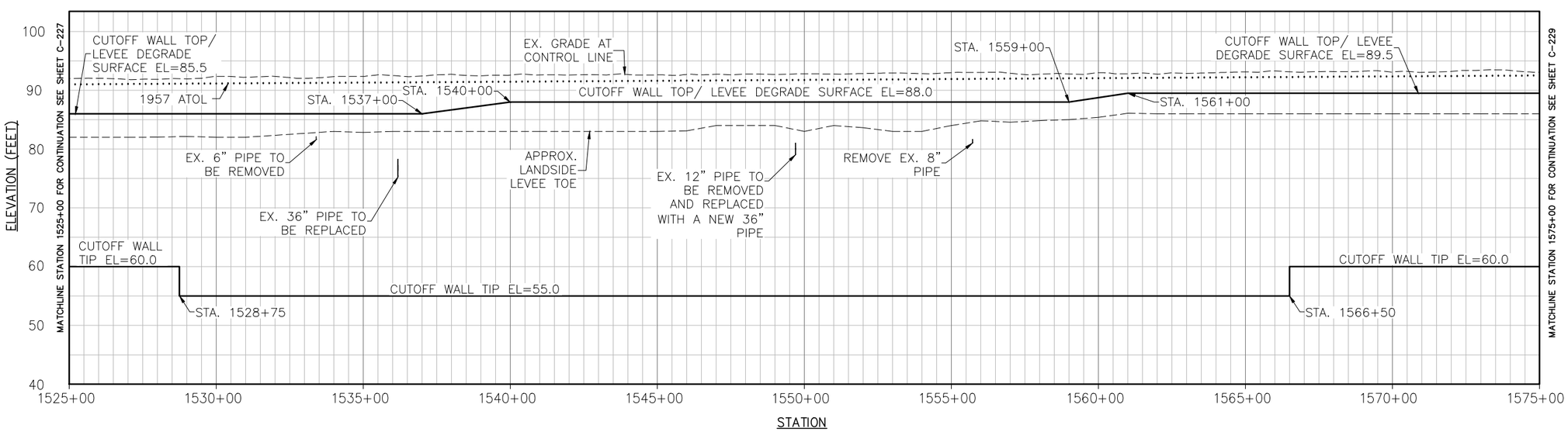

PROFILE

PROFILE
H: 1"=200'
V: 1"=10'

0 200 400

NOT FOR CONSTRUCTION

US Army Corps of Engineers
Sacramento District

Symbol	Description	Date	Approved
0	DESCRIPTION1	DATE1	APPROVAL1
0	DESCRIPTION2	DATE2	APPROVAL2
0	DESCRIPTION3	DATE3	APPROVAL3
0	DESCRIPTION4	DATE4	APPROVAL4
0	DESCRIPTION5	DATE5	APPROVAL5
0	DESCRIPTION6	DATE6	APPROVAL6
0	DESCRIPTION7	DATE7	APPROVAL7
0	DESCRIPTION8	DATE8	APPROVAL8

Designed by: –
Dwn by: –
Spec No.: –
Reviewed by: –
Submitted by: –
CHIEF, CIV ENGR DES SEC A
Date: –
Rev: –
Design File no: –
Drawing Code: –
File name: $$$$date$$$$
Plot date:
Plot scale: –

DEPARTMENT OF THE ARMY
CORPS OF ENGINEERS
SACRAMENTO, CALIFORNIA

SACRAMENTO DISTRICT
IN-HOUSE DESIGN
1325 "J" STREET
SACRAMENTO, CA 95814-2922

SUTTER & BUTTE COUNTY CALIFORNIA
SUTTER BASIN PILOT FEASIBILITY STUDY
DRAFT REPORT
ALTERNATIVE SB-8
PROFILE VIEW
STA 1525+00 TO 1575+00

Sheet reference number:
C-228

VERTICAL DATUM

THE VERTICAL DATUM OF THIS SURVEY IS THE NORTH AMERICAN VERTICAL DATUM OF 1988 (NAVD88) BEING BASED ON NATIONAL GEODETIC SURVEY (NGS) POINTS LISTED AND DERIVED BY GLOBAL POSITIONING SYSTEM (GPS) STATIC METHOD.

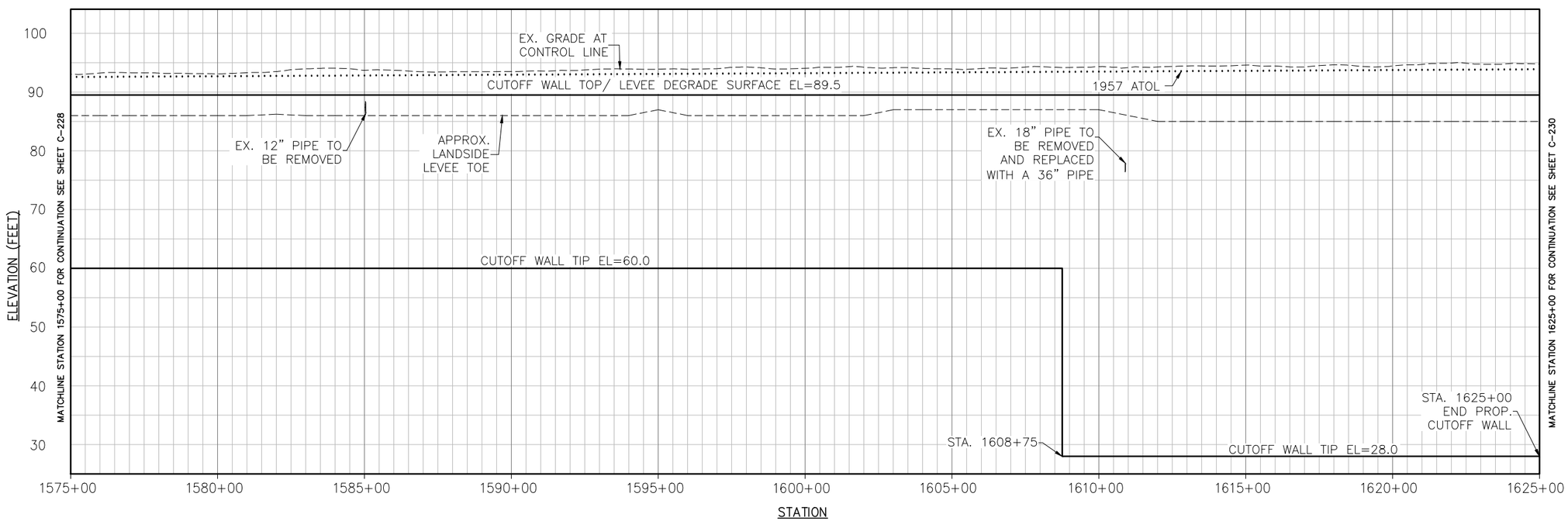

PROFILE

PROFILE

H: 1"=200'
V: 1"=10'

0 200 400

NOT FOR CONSTRUCTION

US Army Corps of Engineers
Sacramento District

Symbol	Description	Date	Approved
8	DESCRIPTION8	DATE8	APPROVAL8
7	DESCRIPTION7	DATE7	APPROVAL7
6	DESCRIPTION6	DATE6	APPROVAL6
5	DESCRIPTION5	DATE5	APPROVAL5
4	DESCRIPTION4	DATE4	APPROVAL4
3	DESCRIPTION3	DATE3	APPROVAL3
2	DESCRIPTION2	DATE2	APPROVAL2
1	DESCRIPTION1	DATE1	APPROVAL1

Designed by: –
Dwn by: –
Spec No.: –
Date: –
Rev: –
Reviewed by: –
Design File no: –
Drawing Code: –
Submitted by: –
File name: $$$$date$$$$
Plot date:
Plot scale: –
DWG, CV, EWR, DES, SEC, A

DEPARTMENT OF THE ARMY
CORPS OF ENGINEERS
SACRAMENTO, CALIFORNIA

SACRAMENTO DISTRICT
IN-HOUSE DESIGN
1325 "J" STREET
SACRAMENTO, CA 95814-2922

SUTTER & BUTTE COUNTY CALIFORNIA
SUTTER BASIN PILOT FEASIBILITY STUDY
DRAFT REPORT
ALTERNATIVE SB-8
PROFILE VIEW
STA 1575+00 TO 1625+00

Sheet reference number:
C-229

VERTICAL DATUM

THE VERTICAL DATUM OF THIS SURVEY IS THE NORTH AMERICAN VERTICAL DATUM OF 1988 (NAVD88) BEING BASED ON NATIONAL GEODETIC SURVEY (NGS) POINTS LISTED AND DERIVED BY GLOBAL POSITIONING SYSTEM (GPS) STATIC METHOD.

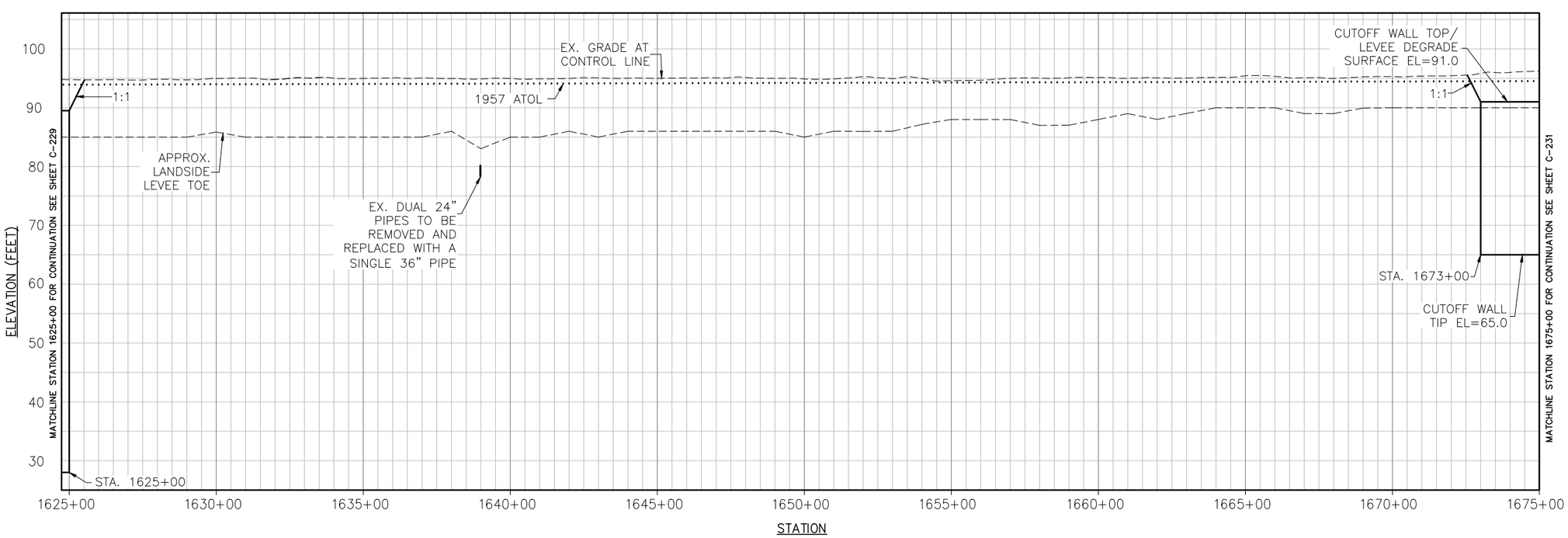

PROFILE

PROFILE
H: 1"=200'
V: 1"=10'

0 200 400

NOT FOR CONSTRUCTION

US Army Corps of Engineers
Sacramento District

Symbol	Description	Date	Approved
0A	DESCRIPTION8	DATE8	APPROVAL8
0A	DESCRIPTION7	DATE7	APPROVAL7
0A	DESCRIPTION6	DATE6	APPROVAL6
0A	DESCRIPTION5	DATE5	APPROVAL5
0A	DESCRIPTION4	DATE4	APPROVAL4
0A	DESCRIPTION3	DATE3	APPROVAL3
0A	DESCRIPTION2	DATE2	APPROVAL2
0A	DESCRIPTION1	DATE1	APPROVAL1

Designed by: – Date: – Rev: –
Dwn by: – Spec No.: – Design file no: –
Reviewed by: – Drawing Code: –
Submitted by: – File name: $$$$date$$$$
Plot date:
Plot scale: –
CHIEF, CIV ENGR DES SEC A

DEPARTMENT OF THE ARMY
CORPS OF ENGINEERS
SACRAMENTO, CALIFORNIA

SACRAMENTO DISTRICT
IN-HOUSE DESIGN
1325 "J" STREET
SACRAMENTO, CA 95814-2922

SUTTER & BUTTE COUNTY CALIFORNIA
SUTTER BASIN PILOT FEASIBILITY STUDY
DRAFT REPORT
ALTERNATIVE SB-8
PROFILE VIEW
STA 1625+00 TO 1675+00

Sheet reference number:
C-230

VERTICAL DATUM

THE VERTICAL DATUM OF THIS SURVEY IS THE NORTH AMERICAN VERTICAL DATUM OF 1988 (NAVD88) BEING BASED ON NATIONAL GEODETIC SURVEY (NGS) POINTS LISTED AND DERIVED BY GLOBAL POSITIONING SYSTEM (GPS) STATIC METHOD.

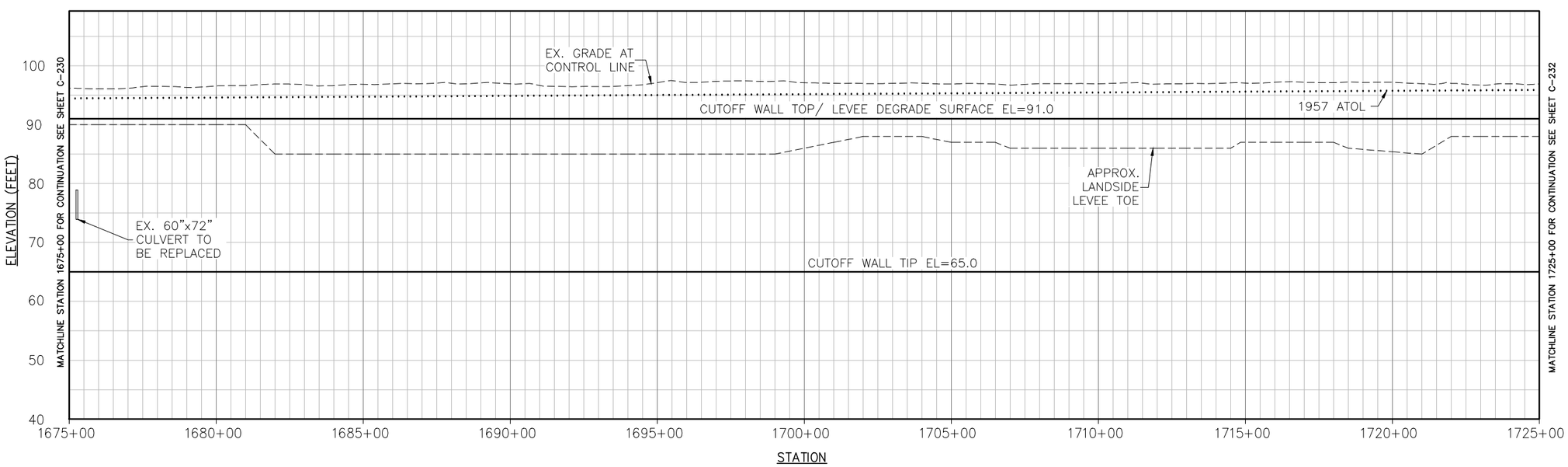

PROFILE

PROFILE
H: 1"=200'
V: 1"=10'

0 200 400

NOT FOR CONSTRUCTION

US Army Corps of Engineers
Sacramento District

Symbol	Description	Date	Approved
8	DESCRIPTION8	DATE8	APPROVAL8
7	DESCRIPTION7	DATE7	APPROVAL7
6	DESCRIPTION6	DATE6	APPROVAL6
5	DESCRIPTION5	DATE5	APPROVAL5
4	DESCRIPTION4	DATE4	APPROVAL4
3	DESCRIPTION3	DATE3	APPROVAL3
2	DESCRIPTION2	DATE2	APPROVAL2
1	DESCRIPTION1	DATE1	APPROVAL1

Designed by: – Date: – Rev: –
Dwn by: – Spec No.: – Design file no: –
Reviewed by: – Drawing Code: –
Submitted by: – File name: $$$$date$$$$
Plot date:
Plot scale: –
CHIEF, CIV ENGR DES SEC A

DEPARTMENT OF THE ARMY
CORPS OF ENGINEERS
SACRAMENTO, CALIFORNIA

SACRAMENTO DISTRICT
IN-HOUSE DESIGN
1325 "J" STREET
SACRAMENTO, CA 95814-2922

SUTTER & BUTTE COUNTY CALIFORNIA
SUTTER BASIN PILOT FEASIBILITY STUDY
DRAFT REPORT
ALTERNATIVE SB-8
PROFILE VIEW
STA 1675+00 TO 1725+00

Sheet reference number:
C-231

VERTICAL DATUM

THE VERTICAL DATUM OF THIS SURVEY IS THE NORTH AMERICAN VERTICAL DATUM OF 1988 (NAVD88) BEING BASED ON NATIONAL GEODETIC SURVEY (NGS) POINTS LISTED AND DERIVED BY GLOBAL POSITIONING SYSTEM (GPS) STATIC METHOD.

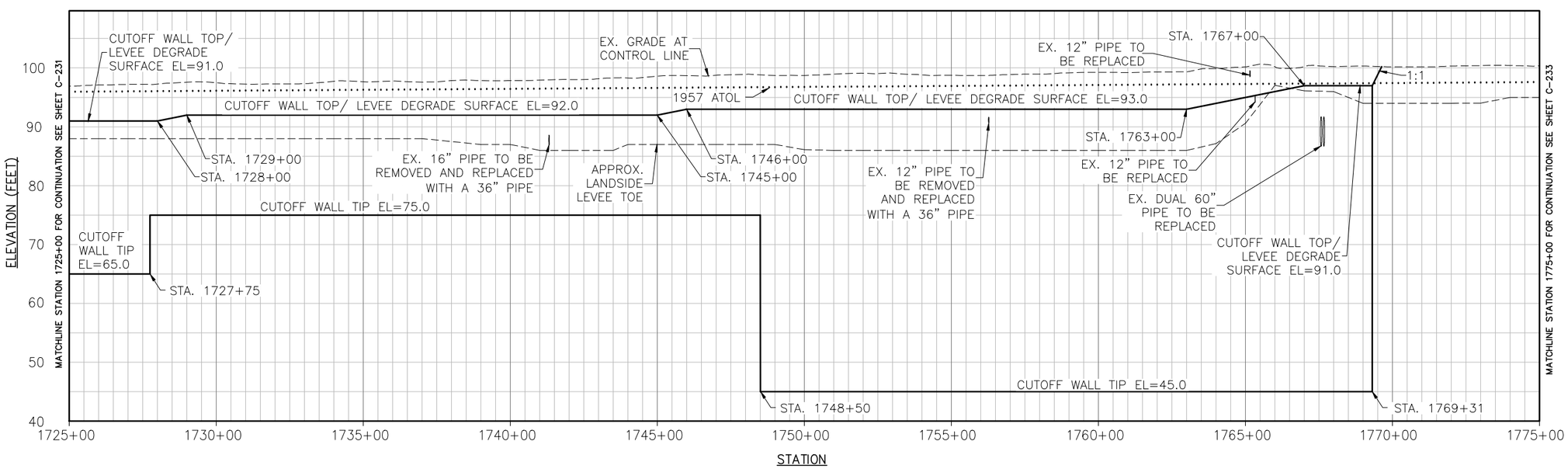

PROFILE

PROFILE
H: 1"=200'
V: 1"=10'

0 200 400

NOT FOR CONSTRUCTION

US Army Corps of Engineers
Sacramento District

Symbol	Description	Date	Approved
0A	DESCRIPTION8	DATE8	APPROVAL8
0A	DESCRIPTION7	DATE7	APPROVAL7
0A	DESCRIPTION6	DATE6	APPROVAL6
0A	DESCRIPTION5	DATE5	APPROVAL5
0A	DESCRIPTION4	DATE4	APPROVAL4
0A	DESCRIPTION3	DATE3	APPROVAL3
0A	DESCRIPTION2	DATE2	APPROVAL2
0A	DESCRIPTION1	DATE1	APPROVAL1

Designed by: – Date: – Rev. –
Dwn by: – Spec No.: – Design file no: –
Reviewed by: – Drawing Code: –
Submitted by: – File name: $$$$date$$$$
Plot date:
Plot scale: –
CHIEF, CIV ENGR DES SEC A

DEPARTMENT OF THE ARMY
CORPS OF ENGINEERS
SACRAMENTO, CALIFORNIA

SACRAMENTO DISTRICT
IN-HOUSE DESIGN
1325 "J" STREET
SACRAMENTO, CA 95814-2922

SUTTER & BUTTE COUNTY CALIFORNIA
SUTTER BASIN PILOT FEASIBILITY STUDY
DRAFT REPORT
ALTERNATIVE SB-8
PROFILE VIEW
STA 1725+00 TO 1775+00

Sheet reference number:
C-232

VERTICAL DATUM

THE VERTICAL DATUM OF THIS SURVEY IS THE NORTH AMERICAN VERTICAL DATUM OF 1988 (NAVD88) BEING BASED ON NATIONAL GEODETIC SURVEY (NGS) POINTS LISTED AND DERIVED BY GLOBAL POSITIONING SYSTEM (GPS) STATIC METHOD.

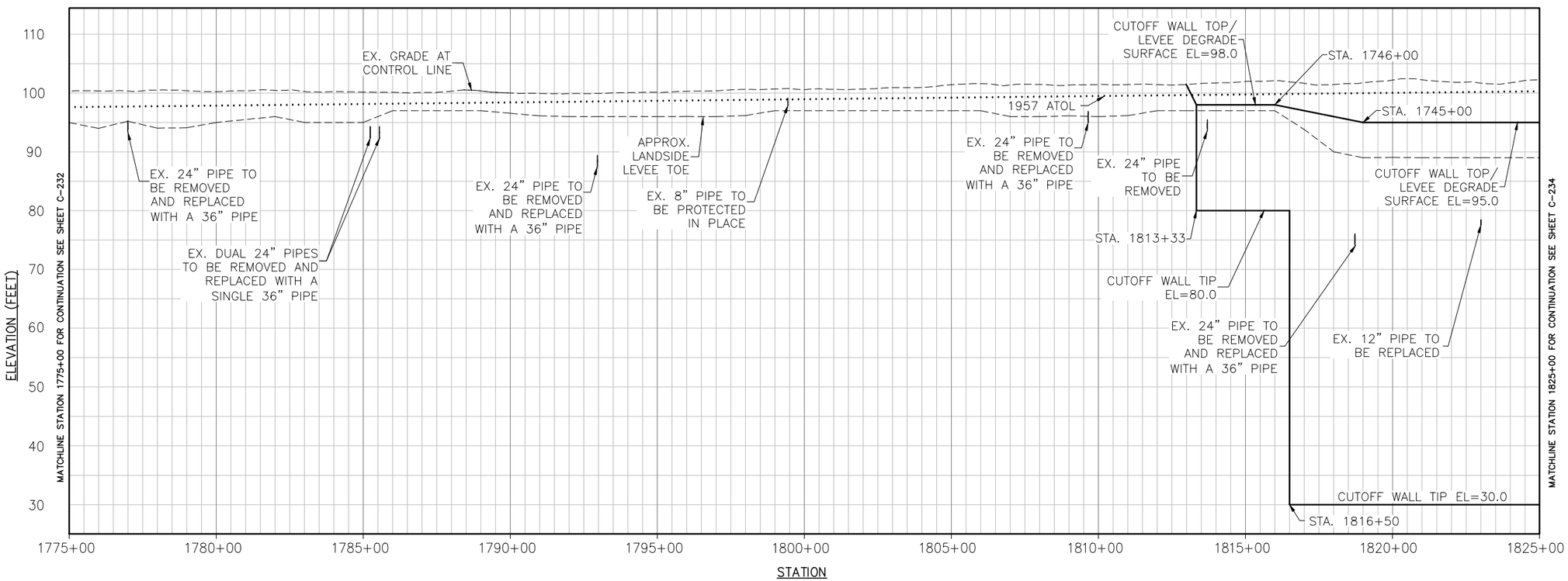

PROFILE

PROFILE
H: 1"=200'
V: 1"=10'

0 200 400

NOT FOR CONSTRUCTION

US Army Corps of Engineers
Sacramento District

Symbol	Description	Date	Approved
0A	DESCRIPTION8	DATE8	APPROVAL8
0A	DESCRIPTION7	DATE7	APPROVAL7
0A	DESCRIPTION6	DATE6	APPROVAL6
0A	DESCRIPTION5	DATE5	APPROVAL5
0A	DESCRIPTION4	DATE4	APPROVAL4
0A	DESCRIPTION3	DATE3	APPROVAL3
0A	DESCRIPTION2	DATE2	APPROVAL2
0A	DESCRIPTION1	DATE1	APPROVAL1

Designed by: –
Dwn by: –
Spec No.: –
Reviewed by: –
Submitted by: –
CHIEF, CIV ENGR SDS SEC A
Date: –
Rev: –
Design file no: –
Drawing Code: –
File name: $$$$date$$$$
Plot date:
Plot scale: –

DEPARTMENT OF THE ARMY
CORPS OF ENGINEERS
SACRAMENTO, CALIFORNIA

SACRAMENTO DISTRICT
IN-HOUSE DESIGN
1325 "J" STREET
SACRAMENTO, CA 95814-2922

SUTTER & BUTTE COUNTY CALIFORNIA
SUTTER BASIN PILOT FEASIBILITY STUDY
DRAFT REPORT
ALTERNATIVE SB-8
PROFILE VIEW
STA 1775+00 TO 1825+00

Sheet reference number:
C-233

VERTICAL DATUM

THE VERTICAL DATUM OF THIS SURVEY IS THE NORTH AMERICAN VERTICAL DATUM OF 1988 (NAVD88) BEING BASED ON NATIONAL GEODETIC SURVEY (NGS) POINTS LISTED AND DERIVED BY GLOBAL POSITIONING SYSTEM (GPS) STATIC METHOD.

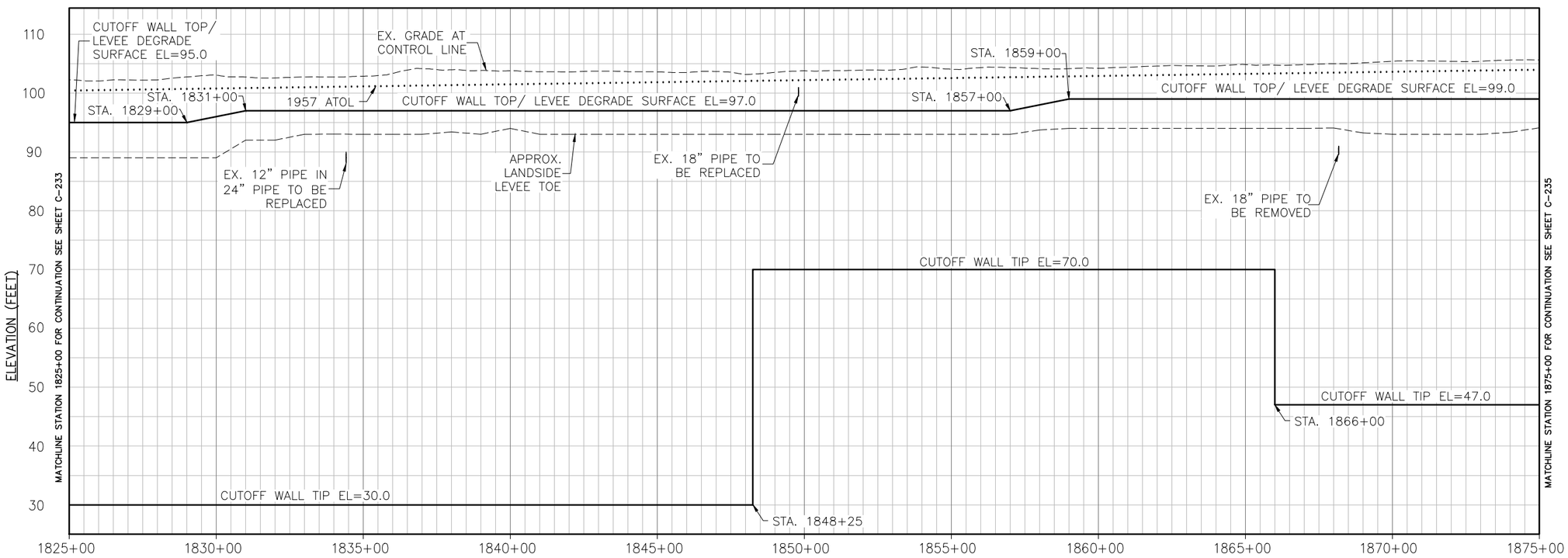

PROFILE

PROFILE
H: 1"=200'
V: 1"=10'

0 200 400

NOT FOR CONSTRUCTION

US Army Corps of Engineers
Sacramento District

Symbol	Description	Date	Approved
0	DESCRIPTION8	DATE8	APPROVAL
0	DESCRIPTION7	DATE7	APPROVAL
0	DESCRIPTION6	DATE6	APPROVAL
0	DESCRIPTION5	DATE5	APPROVAL
0	DESCRIPTION4	DATE4	APPROVAL
0	DESCRIPTION3	DATE3	APPROVAL
0	DESCRIPTION2	DATE2	APPROVAL
0	DESCRIPTION1	DATE1	APPROVAL

Designed by: –
Dwn by: –
Reviewed by: –
Submitted by: –
CHIEF, CIV ENGR DES SEC A
Date: –
Spec No.: –
Design file no: –
Drawing Code: –
File name: –
Plot date: $$$$date$$$$
Plot scale: –
Rev: –

DEPARTMENT OF THE ARMY
CORPS OF ENGINEERS
SACRAMENTO, CALIFORNIA

SACRAMENTO DISTRICT
IN-HOUSE DESIGN
1325 "J" STREET
SACRAMENTO, CA 95814-2922

SUTTER & BUTTE COUNTY CALIFORNIA
SUTTER BASIN PILOT FEASIBILITY STUDY
DRAFT REPORT
ALTERNATIVE SB-8
PROFILE VIEW
STA 1825+00 TO 1875+00

Sheet reference number:
C-234

VERTICAL DATUM

THE VERTICAL DATUM OF THIS SURVEY IS THE NORTH AMERICAN VERTICAL DATUM OF 1988 (NAVD88) BEING BASED ON NATIONAL GEODETIC SURVEY (NGS) POINTS LISTED AND DERIVED BY GLOBAL POSITIONING SYSTEM (GPS) STATIC METHOD.

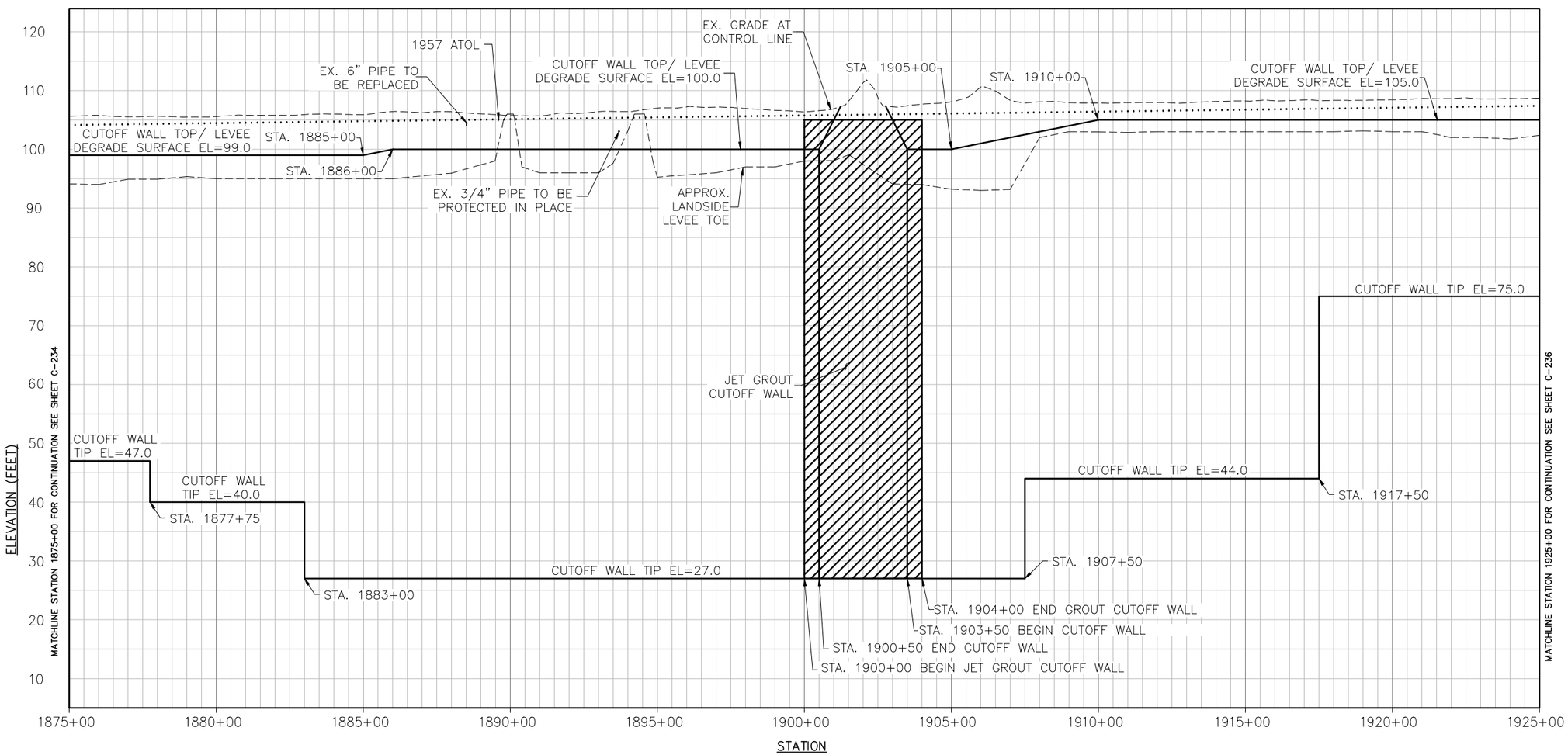

PROFILE

PROFILE

H: 1"=200'
V: 1"=10'

0 200 400

NOT FOR CONSTRUCTION

US Army Corps of Engineers
Sacramento District

Symbol	Description	Date	Approved
DA	DESCRIPTION8	DATE8	APPROVAL8
DA	DESCRIPTION7	DATE7	APPROVAL7
DA	DESCRIPTION6	DATE6	APPROVAL6
DA	DESCRIPTION5	DATE5	APPROVAL5
DA	DESCRIPTION4	DATE4	APPROVAL4
DA	DESCRIPTION3	DATE3	APPROVAL3
DA	DESCRIPTION2	DATE2	APPROVAL2
DA	DESCRIPTION1	DATE1	APPROVAL1

Designed by: –
Dwn by: –
Reviewed by: –
Submitted by: –
CHIEF, CIV ENGR SDS SEC A
Date: –
Spec No.: –
Design File no: –
Drawing Code: –
File name: $$$$date+$$$$
Plot date:
Plot scale: –
Rev: –

DEPARTMENT OF THE ARMY
CORPS OF ENGINEERS
SACRAMENTO, CALIFORNIA

SACRAMENTO DISTRICT
IN-HOUSE DESIGN
1325 "J" STREET
SACRAMENTO, CA 95814-2922

SUTTER & BUTTE COUNTY CALIFORNIA
SUTTER BASIN PILOT FEASIBILITY STUDY
DRAFT REPORT
ALTERNATIVE SB-8
PROFILE VIEW
STA 1875+00 TO 1925+00

Sheet reference number:
C-235

VERTICAL DATUM

THE VERTICAL DATUM OF THIS SURVEY IS THE NORTH AMERICAN VERTICAL DATUM OF 1988 (NAVD88) BEING BASED ON NATIONAL GEODETIC SURVEY (NGS) POINTS LISTED AND DERIVED BY GLOBAL POSITIONING SYSTEM (GPS) STATIC METHOD.

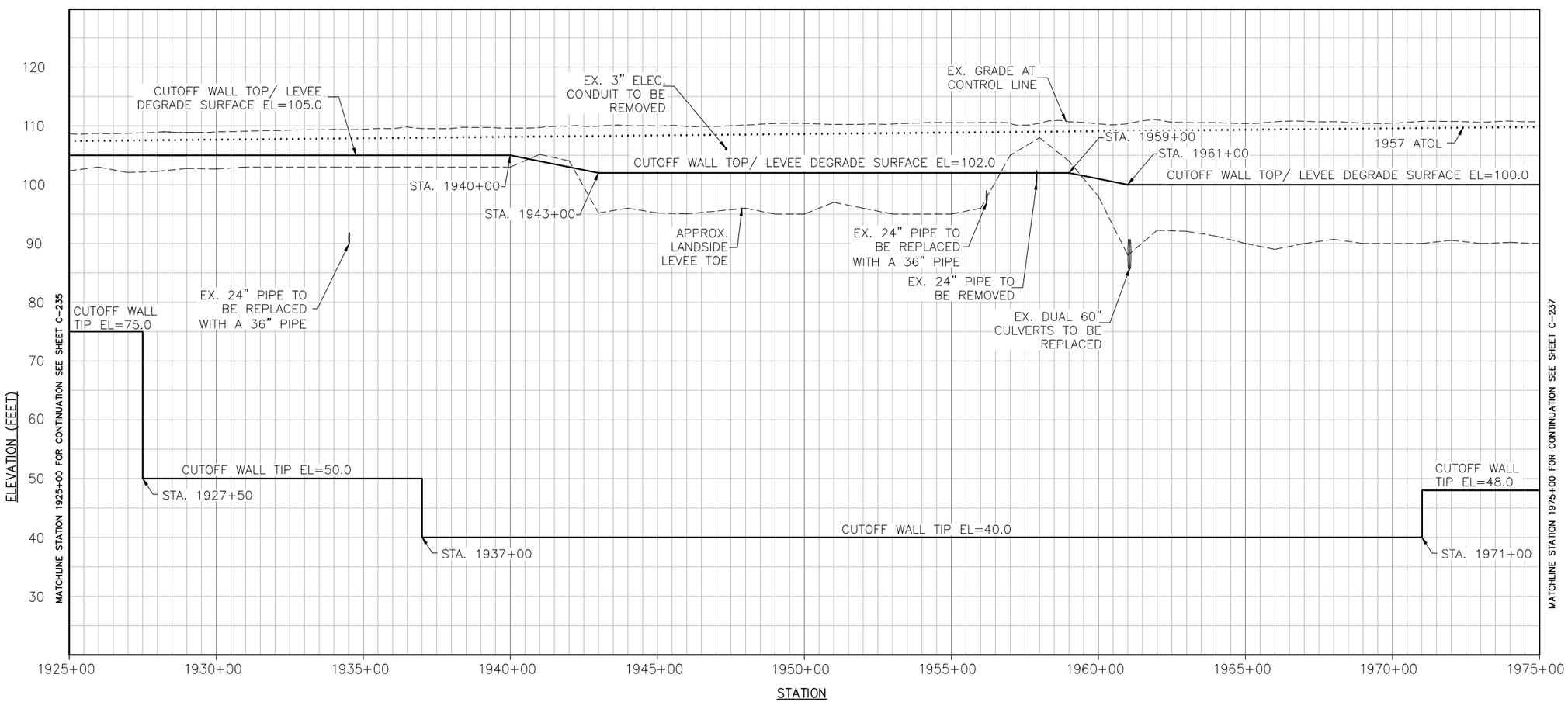

PROFILE

PROFILE
H: 1"=200'
V: 1"=10'

0 200 400

NOT FOR CONSTRUCTION

US Army Corps of Engineers
Sacramento District

Symbol	Description	Date	Approved
08	DESCRIPTION8	DATE8	APPROVAL8
07	DESCRIPTION7	DATE7	APPROVAL7
06	DESCRIPTION6	DATE6	APPROVAL6
05	DESCRIPTION5	DATE5	APPROVAL5
04	DESCRIPTION4	DATE4	APPROVAL4
03	DESCRIPTION3	DATE3	APPROVAL3
02	DESCRIPTION2	DATE2	APPROVAL2
01	DESCRIPTION1	DATE1	APPROVAL1

Designed by: –
Dwn by: –
Spec No.: –
Date: –
Rev: –
Design File no: –
Reviewed by: –
Drawing Code: –
Submitted by: –
CHIEF, CIV ENGR DES SEC A
File name: $$$$date$$$$
Plot date: –
Plot scale: –

DEPARTMENT OF THE ARMY
CORPS OF ENGINEERS
SACRAMENTO, CALIFORNIA

SACRAMENTO DISTRICT
IN-HOUSE DESIGN
1325 "J" STREET
SACRAMENTO, CA 95814-2922

SUTTER & BUTTE COUNTY CALIFORNIA
SUTTER BASIN PILOT FEASIBILITY STUDY
DRAFT REPORT
ALTERNATIVE SB-8
PROFILE VIEW
STA 1925+00 TO 1975+00

Sheet reference number:
C-236

VERTICAL DATUM

THE VERTICAL DATUM OF THIS SURVEY IS THE NORTH AMERICAN VERTICAL DATUM OF 1988 (NAVD88) BEING BASED ON NATIONAL GEODETIC SURVEY (NGS) POINTS LISTED AND DERIVED BY GLOBAL POSITIONING SYSTEM (GPS) STATIC METHOD.

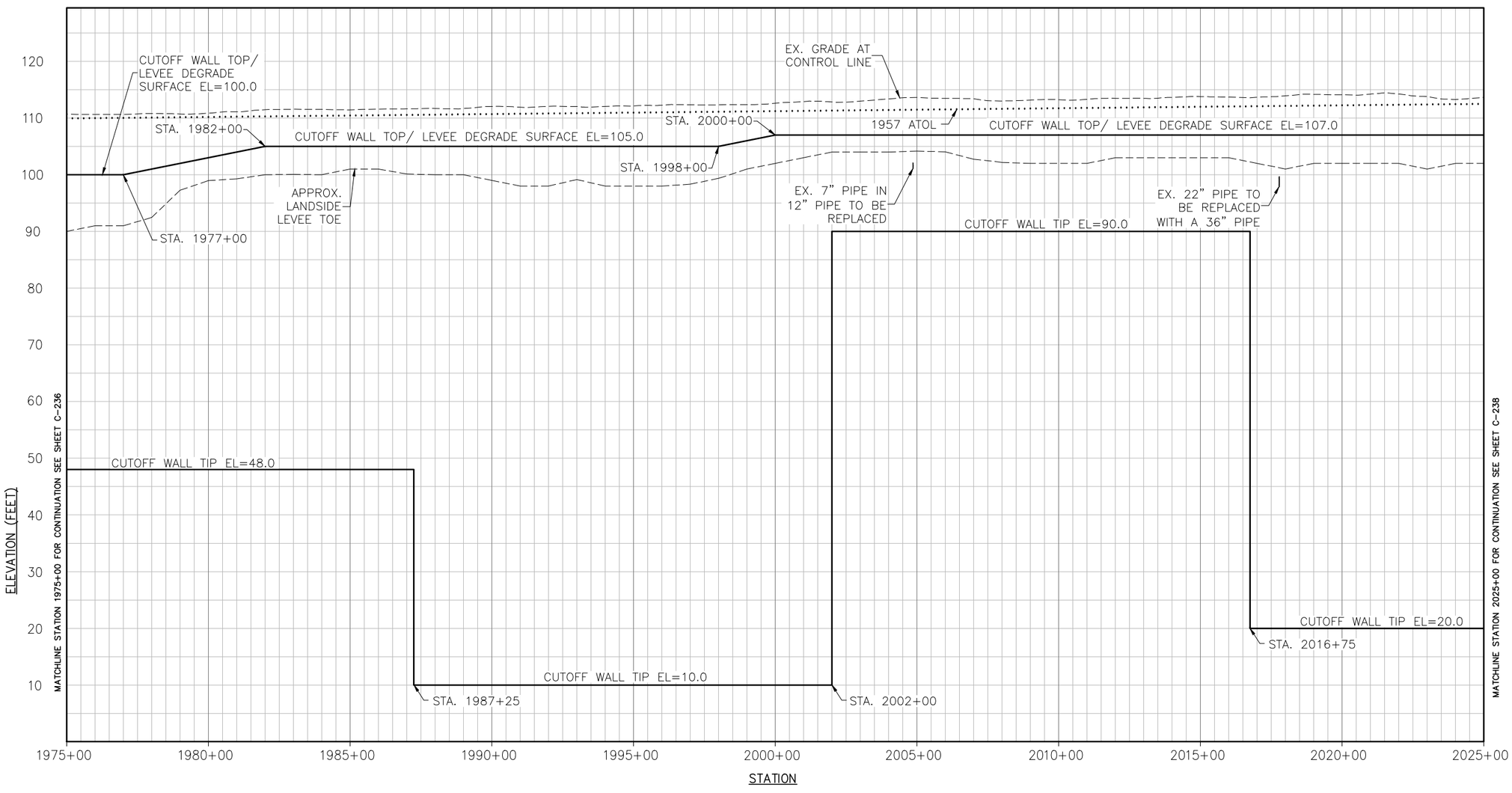

PROFILE

PROFILE
H: 1"=200'
V: 1"=10'

0 200 400

NOT FOR CONSTRUCTION

US Army Corps of Engineers
Sacramento District

Symbol	Description	Date	Approved
08	DESCRIPTION8	DATE8	APPROVAL8
07	DESCRIPTION7	DATE7	APPROVAL7
06	DESCRIPTION6	DATE6	APPROVAL6
05	DESCRIPTION5	DATE5	APPROVAL5
04	DESCRIPTION4	DATE4	APPROVAL4
03	DESCRIPTION3	DATE3	APPROVAL3
02	DESCRIPTION2	DATE2	APPROVAL2
01	DESCRIPTION1	DATE1	APPROVAL1

Designed by: –
Dwn by: –
Reviewed by: –
Submitted by: –
CHIEF, CIV ENGR DES SEC A
Date: –
Spec No.: –
Drawing Code: –
File name: $$$$date$$$$
Plot date:
Plot scale: –
Rev: –

DEPARTMENT OF THE ARMY
CORPS OF ENGINEERS
SACRAMENTO, CALIFORNIA

SACRAMENTO DISTRICT
IN-HOUSE DESIGN
1325 "J" STREET
SACRAMENTO, CA 95814-2922

SUTTER & BUTTE COUNTY CALIFORNIA
SUTTER BASIN PILOT FEASIBILITY STUDY
DRAFT REPORT
ALTERNATIVE SB-8
PROFILE VIEW
STA 1975+00 TO 2025+00

Sheet reference number:
C-237

VERTICAL DATUM

THE VERTICAL DATUM OF THIS SURVEY IS THE NORTH AMERICAN VERTICAL DATUM OF 1988 (NAVD88) BEING BASED ON NATIONAL GEODETIC SURVEY (NGS) POINTS LISTED AND DERIVED BY GLOBAL POSITIONING SYSTEM (GPS) STATIC METHOD.

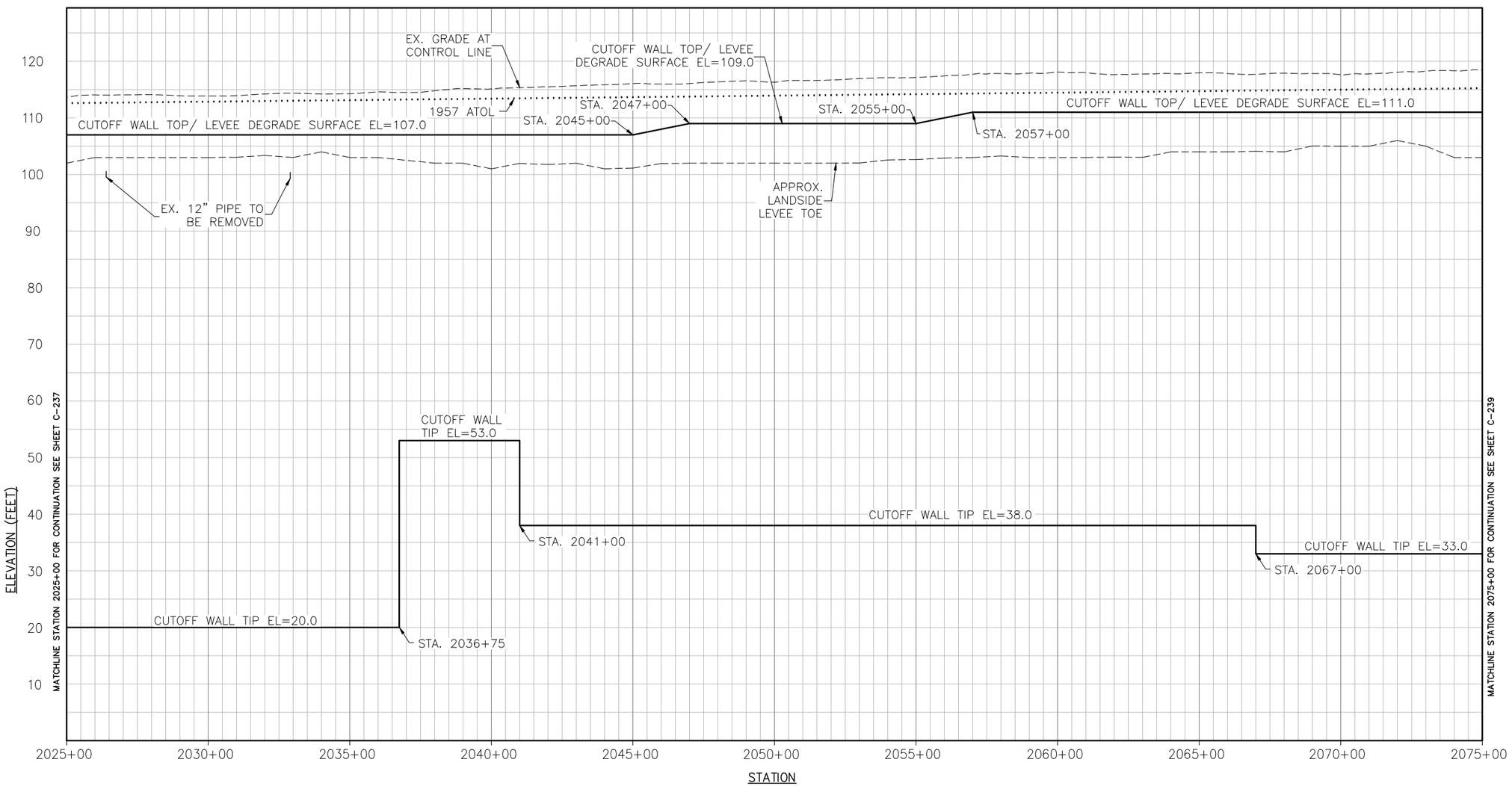

PROFILE

PROFILE
H: 1"=200'
V: 1"=10'

0 200 400

NOT FOR CONSTRUCTION

US Army Corps of Engineers
Sacramento District

Symbol	Description	Date	Approved
0A	DESCRIPTION8	DATE8	APPROVAL8
0A	DESCRIPTION7	DATE7	APPROVAL7
0A	DESCRIPTION6	DATE6	APPROVAL6
0A	DESCRIPTION5	DATE5	APPROVAL5
0A	DESCRIPTION4	DATE4	APPROVAL4
0A	DESCRIPTION3	DATE3	APPROVAL3
0A	DESCRIPTION2	DATE2	APPROVAL2
0A	DESCRIPTION1	DATE1	APPROVAL1

Designed by: –
Dwn by: –
Spec No.: –
Reviewed by: –
Drawing Code: –
Submitted by: –
Date: –
Design file no: –
File name: $$$$date$$$$
Plot date:
Plot scale: –
Rev: –
CADD: CIV DSGN JES SEC A

DEPARTMENT OF THE ARMY
CORPS OF ENGINEERS
SACRAMENTO, CALIFORNIA

SACRAMENTO DISTRICT
IN-HOUSE DESIGN
1325 "J" STREET
SACRAMENTO, CA 95814-2922

SUTTER & BUTTE COUNTY CALIFORNIA
SUTTER BASIN PILOT FEASIBILITY STUDY
DRAFT REPORT
ALTERNATIVE SB-8
PROFILE VIEW
STA 2025+00 TO 2075+00

Sheet reference number:
C-238

VERTICAL DATUM

THE VERTICAL DATUM OF THIS SURVEY IS THE NORTH AMERICAN VERTICAL DATUM OF 1988 (NAVD88) BEING BASED ON NATIONAL GEODETIC SURVEY (NGS) POINTS LISTED AND DERIVED BY GLOBAL POSITIONING SYSTEM (GPS) STATIC METHOD.

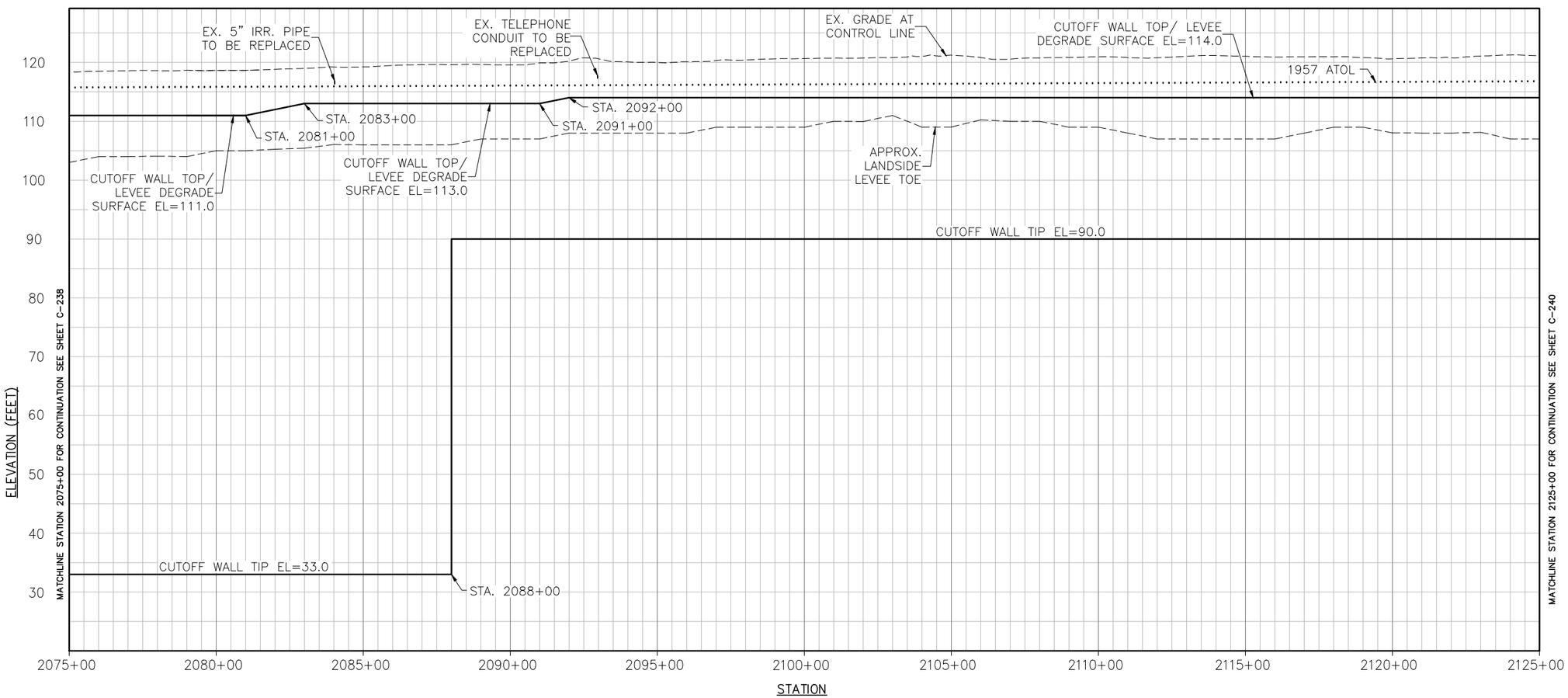

PROFILE

PROFILE
H: 1"=200'
V: 1"=10'

0 200 400

NOT FOR CONSTRUCTION

US Army Corps of Engineers
Sacramento District

Symbol	Description	Date	Approved
DA	DESCRIPTION8	DATE8	APPROVAL8
DA	DESCRIPTION7	DATE7	APPROVAL7
DA	DESCRIPTION6	DATE6	APPROVAL6
DA	DESCRIPTION5	DATE5	APPROVAL5
DA	DESCRIPTION4	DATE4	APPROVAL4
DA	DESCRIPTION3	DATE3	APPROVAL3
DA	DESCRIPTION2	DATE2	APPROVAL2
DA	DESCRIPTION1	DATE1	APPROVAL1

Designed by: –
Dwn by: –
Reviewed by: –
Submitted by: –
CHIEF, CIV ENGR DES SEC A
Date: –
Spec No.: –
Design file no: –
Drawing Code: –
File name: $$$$date$$$$
Plot date:
Plot scale: –
Rev: –

DEPARTMENT OF THE ARMY
CORPS OF ENGINEERS
SACRAMENTO, CALIFORNIA

SACRAMENTO DISTRICT
IN-HOUSE DESIGN
1325 "J" STREET
SACRAMENTO, CA 95814-2922

SUTTER & BUTTE COUNTY CALIFORNIA
SUTTER BASIN PILOT FEASIBILITY STUDY
DRAFT REPORT
ALTERNATIVE SB-8
PROFILE VIEW
STA 2075+00 TO 2125+00

Sheet reference number:
C-239

VERTICAL DATUM

THE VERTICAL DATUM OF THIS SURVEY IS THE NORTH AMERICAN VERTICAL DATUM OF 1988 (NAVD88) BEING BASED ON NATIONAL GEODETIC SURVEY (NGS) POINTS LISTED AND DERIVED BY GLOBAL POSITIONING SYSTEM (GPS) STATIC METHOD.

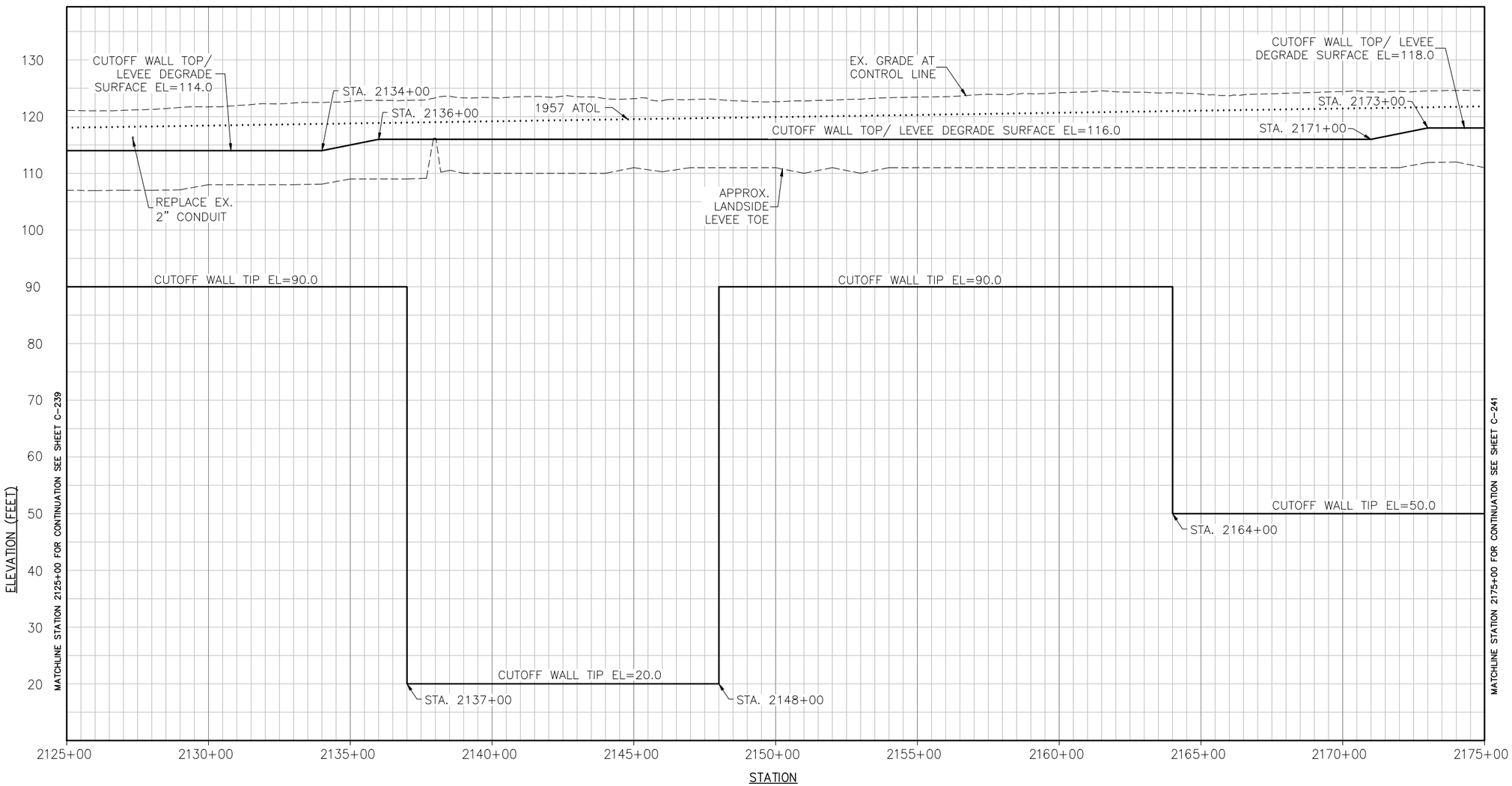

PROFILE

PROFILE
H: 1"=200'
V: 1"=10'

0 200 400

NOT FOR CONSTRUCTION

US Army Corps of Engineers
Sacramento District

Symbol	Description	Date	Approved
0A	DESCRIPTION8	DATE8	APPROVAL8
0X	DESCRIPTION7	DATE7	APPROVAL7
0A	DESCRIPTION6	DATE6	APPROVAL6
0A	DESCRIPTION5	DATE5	APPROVAL5
0A	DESCRIPTION4	DATE4	APPROVAL4
0A	DESCRIPTION3	DATE3	APPROVAL3
0A	DESCRIPTION2	DATE2	APPROVAL2
0A	DESCRIPTION1	DATE1	APPROVAL1

DEPARTMENT OF THE ARMY
CORPS OF ENGINEERS
SACRAMENTO, CALIFORNIA

SACRAMENTO DISTRICT
IN-HOUSE DESIGN
1325 "J" STREET
SACRAMENTO, CA 95814-2922

Designed by: –
Dwn by: –
Spec No.: –
Reviewed by: –
Submitted by: –
CHIEF, CIV ENGR DES SEC A
Date: –
Design file no: –
Drawing Code: –
File name: $$$$date$$$$
Plot date: –
Plot scale: –
Rev: –

SUTTER & BUTTE COUNTY CALIFORNIA
SUTTER BASIN PILOT FEASIBILITY STUDY
DRAFT REPORT
ALTERNATIVE SB-8
PROFILE VIEW
STA 2125+00 TO 2175+00

Sheet reference number:
C-240

VERTICAL DATUM

THE VERTICAL DATUM OF THIS SURVEY IS THE NORTH AMERICAN VERTICAL DATUM OF 1988 (NAVD88) BEING BASED ON NATIONAL GEODETIC SURVEY (NGS) POINTS LISTED AND DERIVED BY GLOBAL POSITIONING SYSTEM (GPS) STATIC METHOD.

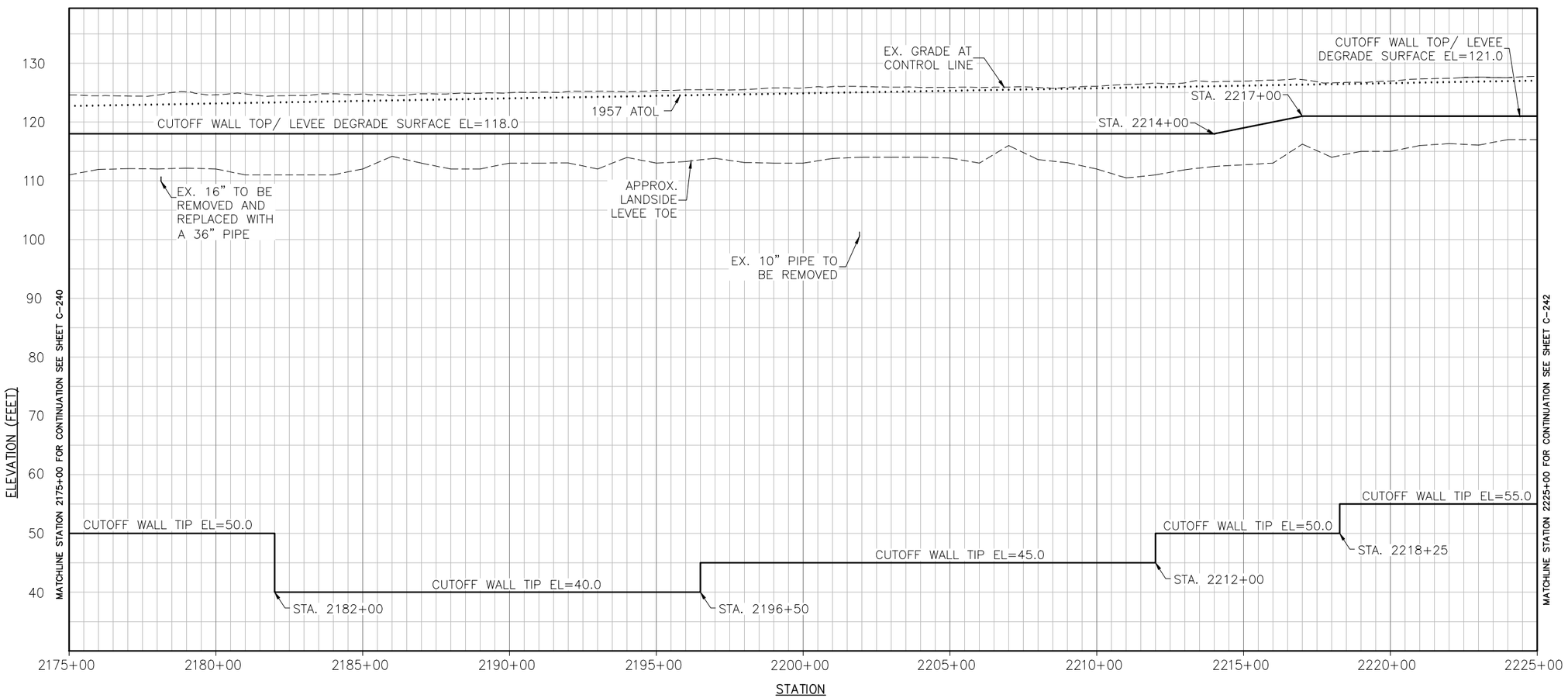

PROFILE

PROFILE
H: 1"=200'
V: 1"=10'

0 200 400

NOT FOR CONSTRUCTION

US Army Corps of Engineers
Sacramento District

Symbol	Description	Date	Approved
DA	DESCRIPTION8	DATE8	APPROVAL8
DA	DESCRIPTION7	DATE7	APPROVAL7
DA	DESCRIPTION6	DATE6	APPROVAL6
DA	DESCRIPTION5	DATE5	APPROVAL5
DA	DESCRIPTION4	DATE4	APPROVAL4
DA	DESCRIPTION3	DATE3	APPROVAL3
DA	DESCRIPTION2	DATE2	APPROVAL2
DA	DESCRIPTION1	DATE1	APPROVAL1

Designed by: –
Dwn by: –
Reviewed by: –
Submitted by: –
CHIEF, CIV ENGR SDS SEC A
Date: –
Spec No.: –
Design file no: –
Drawing Code: –
File name: $$$$date$$$$
Plot date:
Plot scale: –
Rev: –

DEPARTMENT OF THE ARMY
CORPS OF ENGINEERS
SACRAMENTO, CALIFORNIA

SACRAMENTO DISTRICT
IN-HOUSE DESIGN
1325 "J" STREET
SACRAMENTO, CA 95814-2922

SUTTER & BUTTE COUNTY CALIFORNIA
SUTTER BASIN PILOT FEASIBILITY STUDY
DRAFT REPORT
ALTERNATIVE SB-8
PROFILE VIEW
STA 2175+00 TO 2225+00

Sheet reference number:
C-241

VERTICAL DATUM

THE VERTICAL DATUM OF THIS SURVEY IS THE NORTH AMERICAN VERTICAL DATUM OF 1988 (NAVD88) BEING BASED ON NATIONAL GEODETIC SURVEY (NGS) POINTS LISTED AND DERIVED BY GLOBAL POSITIONING SYSTEM (GPS) STATIC METHOD.

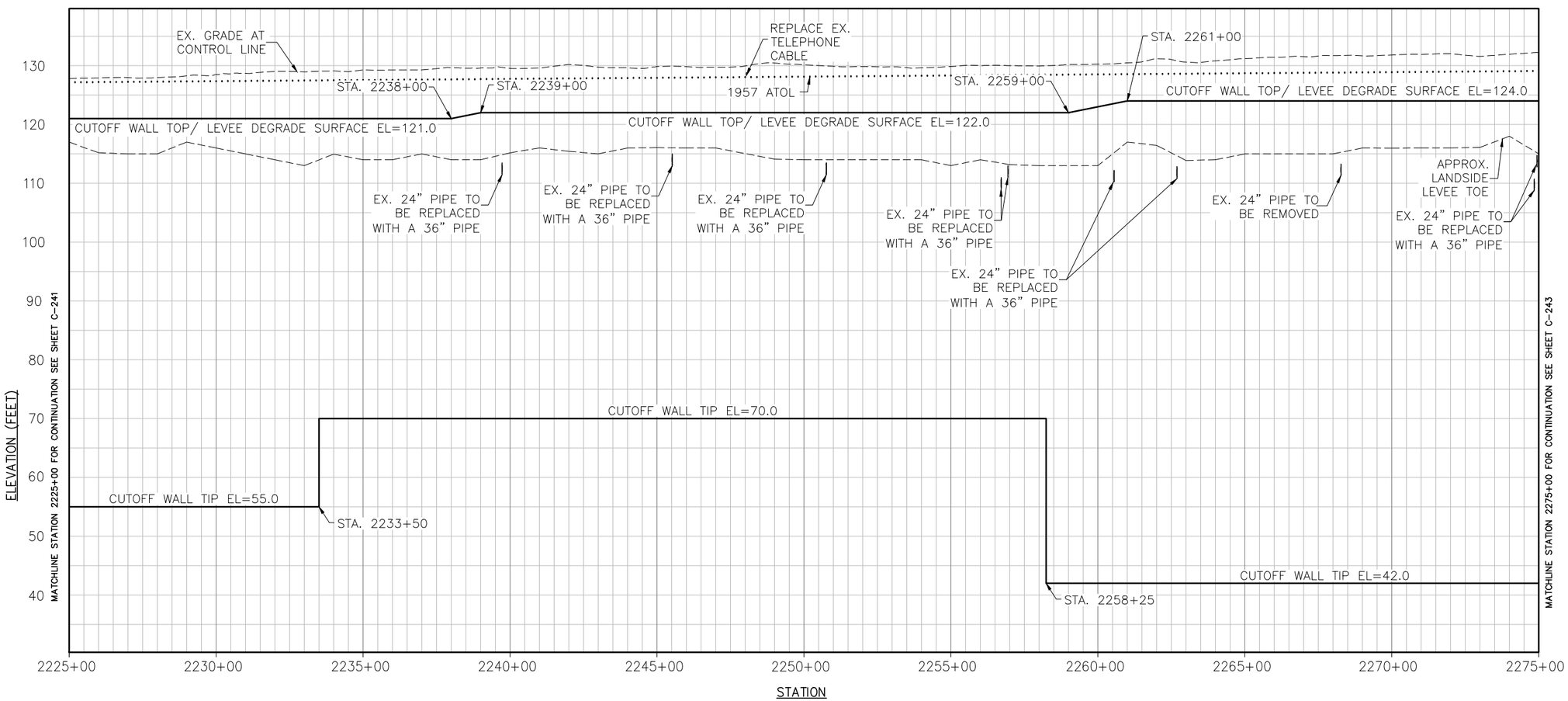

PROFILE

PROFILE
H: 1"=200'
V: 1"=10'

0 200 400

NOT FOR CONSTRUCTION

US Army Corps of Engineers
Sacramento District

Symbol	Description	Date	Approved
DA	DESCRIPTION8	DATE8	APPROVAL8
DA	DESCRIPTION7	DATE7	APPROVAL7
DA	DESCRIPTION6	DATE6	APPROVAL6
DA	DESCRIPTION5	DATE5	APPROVAL5
DA	DESCRIPTION4	DATE4	APPROVAL4
DA	DESCRIPTION3	DATE3	APPROVAL3
DA	DESCRIPTION2	DATE2	APPROVAL2
DA	DESCRIPTION1	DATE1	APPROVAL1

DEPARTMENT OF THE ARMY
CORPS OF ENGINEERS
SACRAMENTO, CALIFORNIA

SACRAMENTO DISTRICT
IN-HOUSE DESIGN
1325 "J" STREET
SACRAMENTO, CA 95814-2922

Designed by: –
Dwn by: –
Spec No.: –
Reviewed by: –
Submitted by: –
CHIEF, CIV ENGR DES SEC. A
Date: –
Rev: –
Design file no: –
Drawing Code: –
File name: –
Plot date: $$$$date$$$$
Plot scale: –

SUTTER & BUTTE COUNTY CALIFORNIA
SUTTER BASIN PILOT FEASIBILITY STUDY
DRAFT REPORT
ALTERNATIVE SB-8
PROFILE VIEW
STA 2225+00 TO 2275+00

Sheet reference number:
C-242

VERTICAL DATUM

THE VERTICAL DATUM OF THIS SURVEY IS THE NORTH AMERICAN VERTICAL DATUM OF 1988 (NAVD88) BEING BASED ON NATIONAL GEODETIC SURVEY (NGS) POINTS LISTED AND DERIVED BY GLOBAL POSITIONING SYSTEM (GPS) STATIC METHOD.

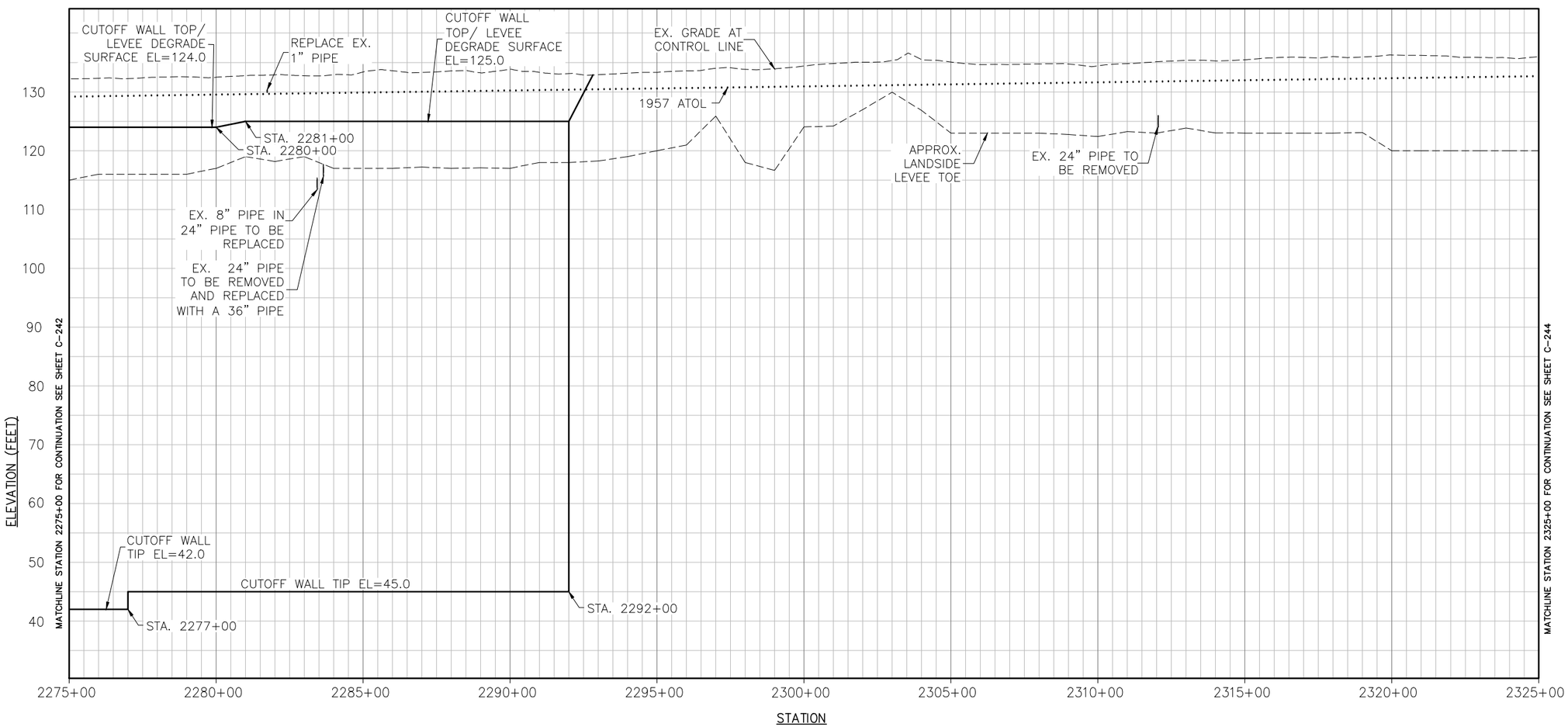

PROFILE

PROFILE
H: 1"=200'
V: 1"=10'

0 200 400

NOT FOR CONSTRUCTION

US Army Corps of Engineers
Sacramento District

Symbol	Description	Date	Approved
0A	DESCRIPTION8	DATE8	APPROVAL8
0A	DESCRIPTION7	DATE7	APPROVAL7
0A	DESCRIPTION6	DATE6	APPROVAL6
0A	DESCRIPTION5	DATE5	APPROVAL5
0A	DESCRIPTION4	DATE4	APPROVAL4
0A	DESCRIPTION3	DATE3	APPROVAL3
0A	DESCRIPTION2	DATE2	APPROVAL2
0A	DESCRIPTION1	DATE1	APPROVAL1

Designed by: –
Dwn by: –
Reviewed by: –
Submitted by: –
CHIEF, CIV ENGR DES SEC A
Date: –
Spec No.: –
Drawing Code: –
File name: $$$$date$$$$
Plot date:
Plot scale: –
Rev: –

DEPARTMENT OF THE ARMY
CORPS OF ENGINEERS
SACRAMENTO, CALIFORNIA

SACRAMENTO DISTRICT
IN-HOUSE DESIGN
1325 "J" STREET
SACRAMENTO, CA 95814-2922

SUTTER & BUTTE COUNTY CALIFORNIA
SUTTER BASIN PILOT FEASIBILITY STUDY
DRAFT REPORT
ALTERNATIVE SB-8
PROFILE VIEW
STA 2275+00 TO 2325+00

Sheet reference number:
C-243

VERTICAL DATUM

THE VERTICAL DATUM OF THIS SURVEY IS THE NORTH AMERICAN VERTICAL DATUM OF 1988 (NAVD88) BEING BASED ON NATIONAL GEODETIC SURVEY (NGS) POINTS LISTED AND DERIVED BY GLOBAL POSITIONING SYSTEM (GPS) STATIC METHOD.

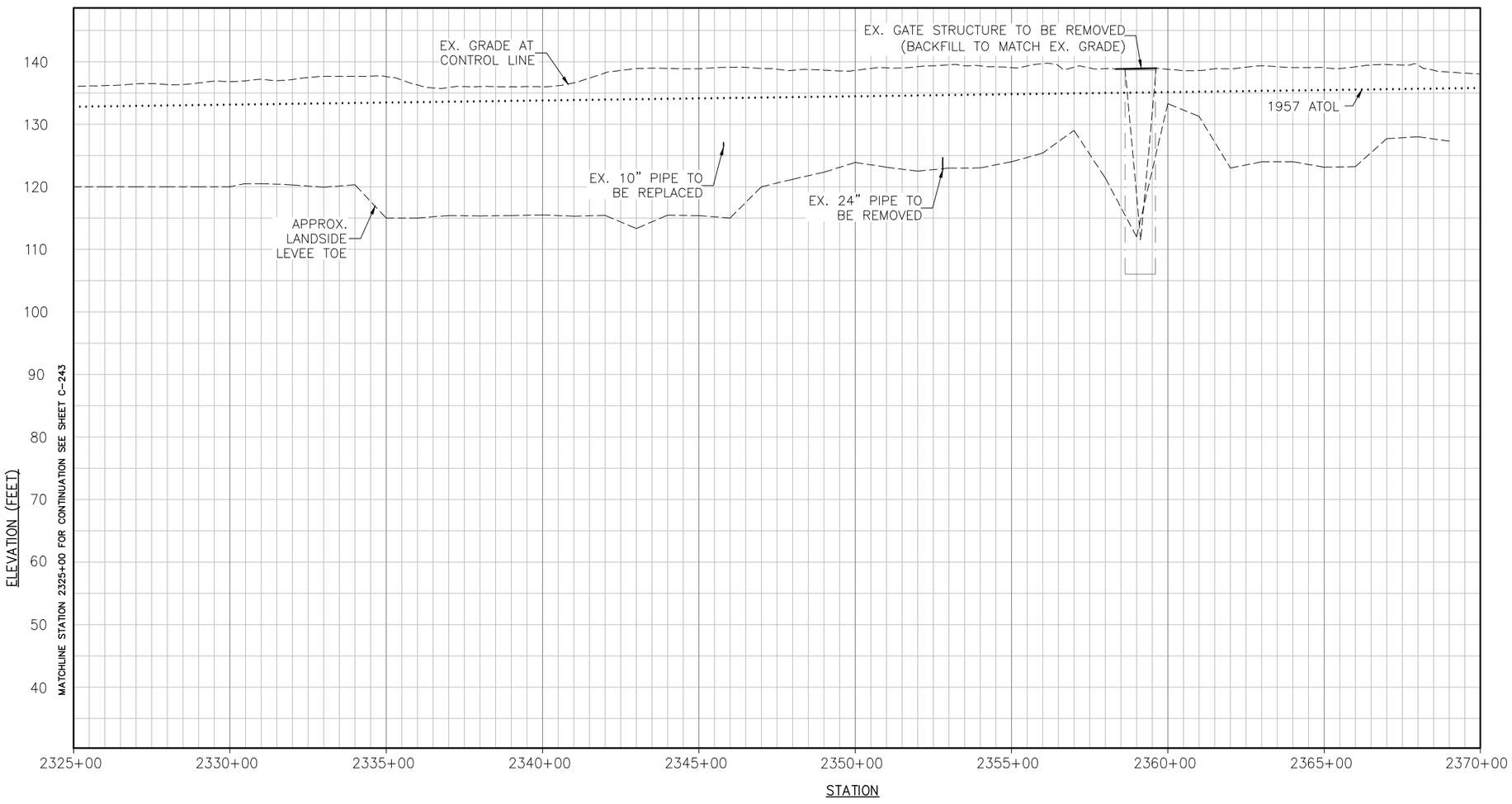

PROFILE

PROFILE
H: 1"=200'
V: 1"=10'

0 200 400

NOT FOR CONSTRUCTION

US Army Corps of Engineers
Sacramento District

Symbol	Description	Date	Approved
0A	DESCRIPTION8	DATE7	APPROVAL7
0A	DESCRIPTION7	DATE6	APPROVAL6
0A	DESCRIPTION6	DATE5	APPROVAL5
0A	DESCRIPTION5	DATE4	APPROVAL4
0A	DESCRIPTION4	DATE3	APPROVAL3
0A	DESCRIPTION3	DATE2	APPROVAL2
0A	DESCRIPTION2	DATE1	APPROVAL1
0A	DESCRIPTION1	Date	Approved

Designed by: –
Dwn by: –
Spec No.: –
Reviewed by: –
Drawing Code: –
Submitted by: –
Rev: –
Date: –
Design file no: –
File name: $$$$date$$$$
Plot date:
Plot scale: –
CHIEF, CIV ENGR DES SEC A

DEPARTMENT OF THE ARMY
CORPS OF ENGINEERS
SACRAMENTO, CALIFORNIA

SACRAMENTO DISTRICT
IN-HOUSE DESIGN
1325 "J" STREET
SACRAMENTO, CA 95814-2922

SUTTER & BUTTE COUNTY CALIFORNIA
SUTTER BASIN PILOT FEASIBILITY STUDY
DRAFT REPORT
ALTERNATIVE SB-8
PROFILE VIEW
STA 2325+00 TO 2368+00

Sheet reference number:
C-244

VERTICAL DATUM

THE VERTICAL DATUM OF THIS SURVEY IS THE NORTH AMERICAN VERTICAL DATUM OF 1988 (NAVD88) BEING BASED ON NATIONAL GEODETIC SURVEY (NGS) POINTS LISTED AND DERIVED BY GLOBAL POSITIONING SYSTEM (GPS) STATIC METHOD.

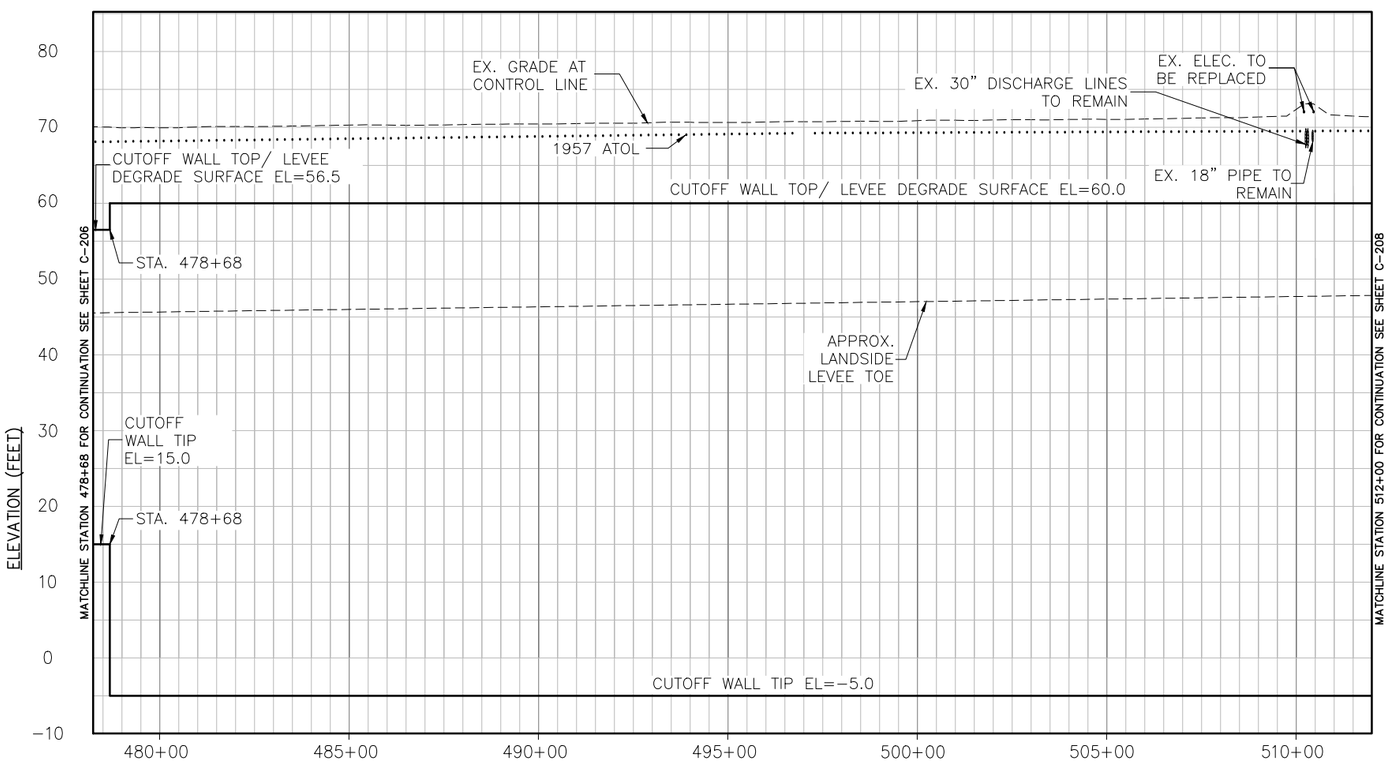

PROFILE

PROFILE
H: 1"=200'
V: 1"=10'

0 200 400

NOT FOR CONSTRUCTION

US Army Corps of Engineers
Sacramento District

Symbol	Description	Date	Approved
0A	DESCRIPTION1	DATE1	APPROVAL1
0B	DESCRIPTION2	DATE2	APPROVAL2
0C	DESCRIPTION3	DATE3	APPROVAL3
0D	DESCRIPTION4	DATE4	APPROVAL4
0E	DESCRIPTION5	DATE5	APPROVAL5
0F	DESCRIPTION6	DATE6	APPROVAL6
0G	DESCRIPTION7	DATE7	APPROVAL7
0H	DESCRIPTION8	DATE8	APPROVAL8

DEPARTMENT OF THE ARMY
CORPS OF ENGINEERS
SACRAMENTO, CALIFORNIA

SACRAMENTO DISTRICT
IN-HOUSE DESIGN
1325 "J" STREET
SACRAMENTO, CA 95814-2922

Designed by: –
Dwn by: –
Spec No.: –
Reviewed by: –
Submitted by: –
CHIEF, CIV ENGR SDS SEC A
Date: –
Design file no: –
Drawing Code: –
File name: $$$$date$$$$
Plot date: –
Plot scale: –
Rev: –

SUTTER & BUTTE COUNTY CALIFORNIA
SUTTER BASIN PILOT FEASIBILITY STUDY
DRAFT REPORT
ALTERNATIVE SB-7 AND SB-8
STAR BEND SETBACK OPTION
PROFILE VIEW
STA. 478+68 to STA. 512+00

Sheet reference number:
C-245

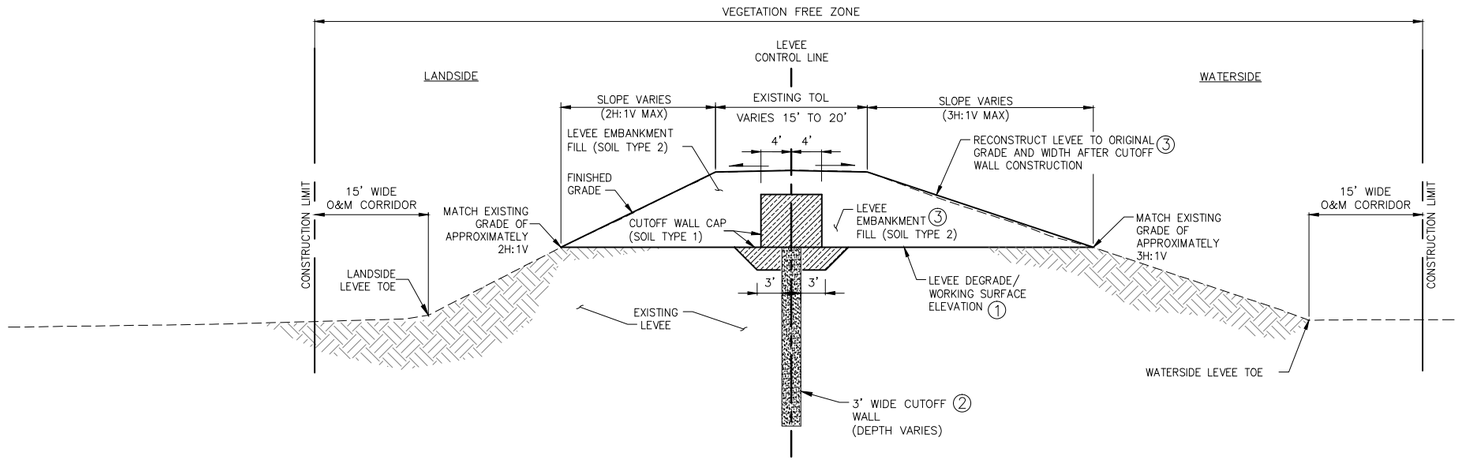

TYPICAL CUTOFF WALL

SCALE: NONE

CONSTRUCTION SEQUENCE:

1. DEGRADE EXISTING LEVEE.
2. CONSTRUCT CUTOFF WALL.
3. RECONSTRUCT LEVEE EMBANKMENT.

NOT FOR CONSTRUCTION

US Army Corps of Engineers®
Sacramento District

Symbol	Description	Date	Approved
D8	DESCRIPTION8	DATE8	APPROVAL8
D7	DESCRIPTION7	DATE7	APPROVAL7
D6	DESCRIPTION6	DATE6	APPROVAL6
D5	DESCRIPTION5	DATE5	APPROVAL5
D4	DESCRIPTION4	DATE4	APPROVAL4
D3	DESCRIPTION3	DATE3	APPROVAL3
D2	DESCRIPTION2	DATE2	APPROVAL2
D1	DESCRIPTION1	DATE1	APPROVAL1

Designed by: –
Dwn by: –
Spec No.: –
Date: –
Design file no: –
Rev. –
Reviewed by: –
Drawing Code: –
Submitted by: –
File name: $$$$cmd$$$$
Plot date: $$$$cmd$$$$
Plot scale: –
CHIEF, CIV ENGR DES SEC A

DEPARTMENT OF THE ARMY
CORPS OF ENGINEERS
SACRAMENTO, CALIFORNIA

SACRAMENTO DISTRICT
IN-HOUSE DESIGN
1325 "J" STREET
SACRAMENTO, CA 95814-2922

SUTTER & BUTTE COUNTY CALIFORNIA
SUTTER BASIN PILOT FEASIBILITY STUDY
DRAFT REPORT
ALTERNATIVE SB-7 AND SB-8
TYPICAL LEVEE IMPROVEMENT-CUTOFF WALL

Sheet reference number:
C-301

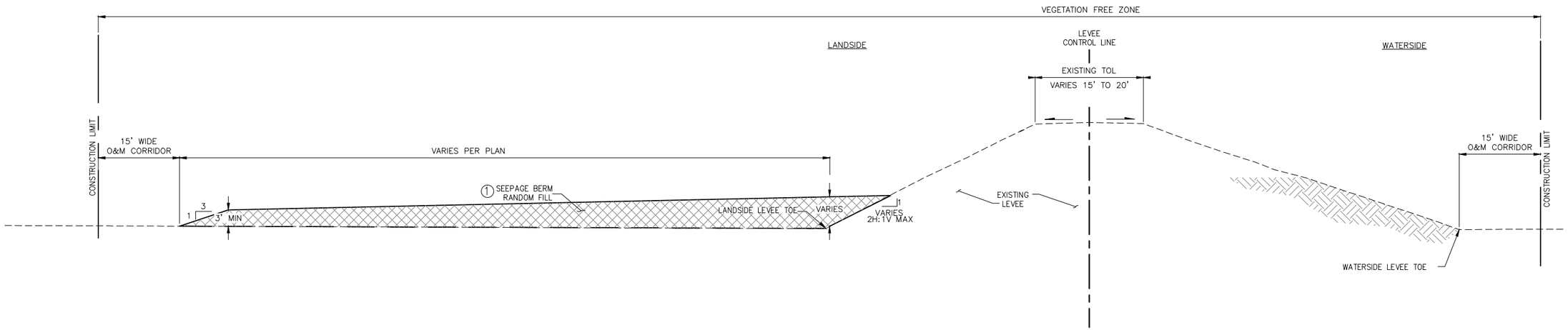

TYPICAL SEEPAGE BERM

SCALE: NONE

CONSTRUCTION SEQUENCE:

1. INSTALL RANDOM FILL FOR SEEPAGE BERM

NOT FOR CONSTRUCTION

US Army Corps of Engineers®
Sacramento District

Symbol	Description	Date	Approved
D8	DESCRIPTION8	DATE8	APPROVAL8
D7	DESCRIPTION7	DATE7	APPROVAL7
D6	DESCRIPTION6	DATE6	APPROVAL6
D5	DESCRIPTION5	DATE5	APPROVAL5
D4	DESCRIPTION4	DATE4	APPROVAL4
D3	DESCRIPTION3	DATE3	APPROVAL3
D2	DESCRIPTION2	DATE2	APPROVAL2
D1	DESCRIPTION1	DATE1	APPROVAL1

DEPARTMENT OF THE ARMY
CORPS OF ENGINEERS
SACRAMENTO, CALIFORNIA

SACRAMENTO DISTRICT
IN-HOUSE DESIGN
1325 "J" STREET
SACRAMENTO, CA 95814-2922

Designed by: –		Date: –	Rev. –
Dwn by: –	Spec No.: –	Design file no: –	
Reviewed by: –		Drawing Code: –	
Submitted by: – CHIEF, CIV ENGR DES SEC A		File name: $$$$.dwg Plot date: $$$$ Plot scale: –	

SUTTER & BUTTE COUNTY CALIFORNIA
SUTTER BASIN PILOT FEASIBILITY STUDY
DRAFT REPORT
ALTERNATIVE SB-7 AND SB-8
TYPICAL LEVEE IMPROVEMENT – SEEPAGE BERM

Sheet reference number:
C-302

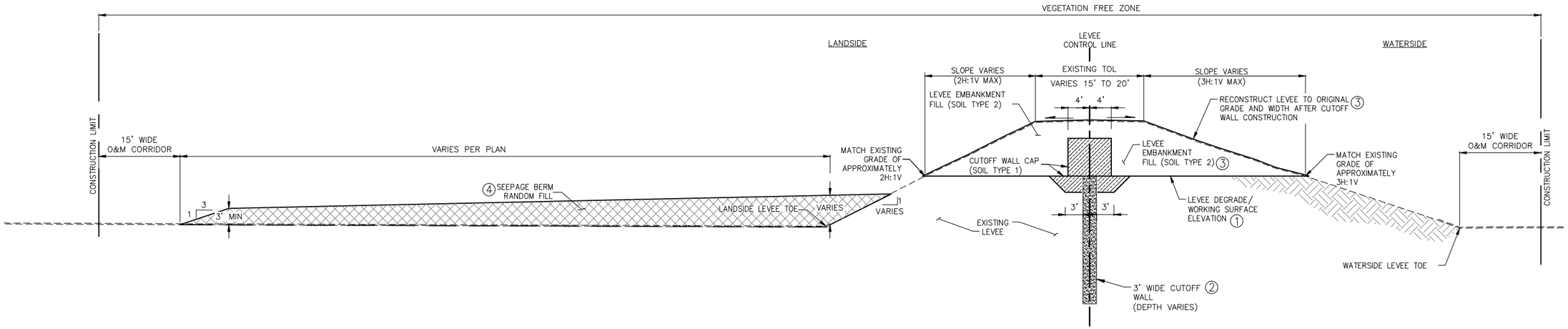

TYPICAL CUTOFF WALL WITH SEEPAGE BERM
SCALE: NONE

CONSTRUCTION SEQUENCE:

1. DEGRADE EXISTING LEVEE.
2. CONSTRUCT CUTOFF WALL.
3. RECONSTRUCT LEVEE EMBANKMENT.
4. INSTALL RANDOM FILL FOR SEEPAGE BERM

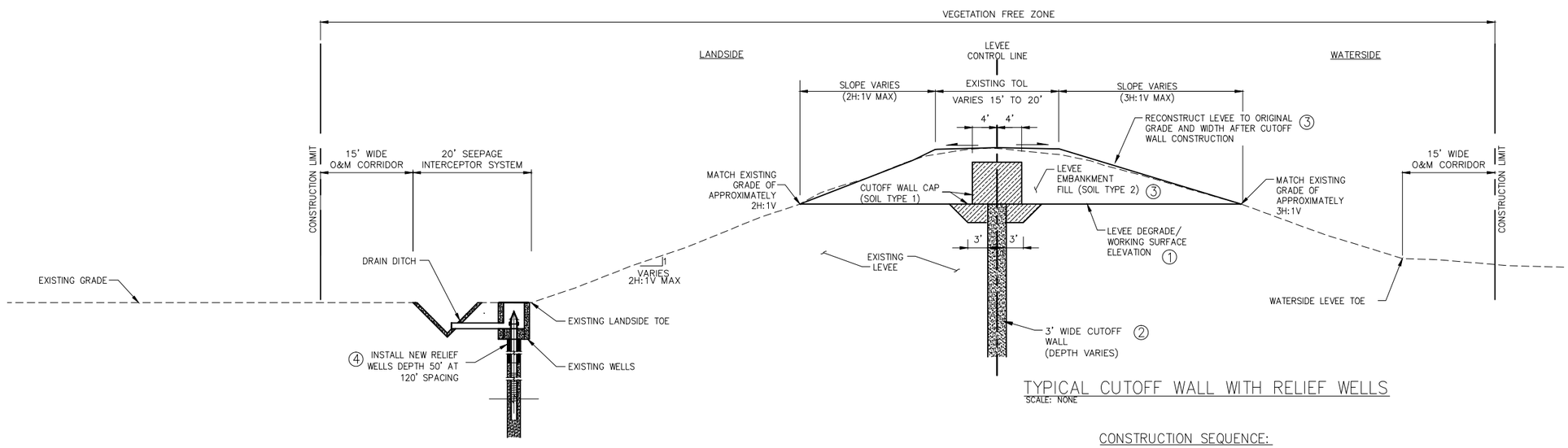

TYPICAL CUTOFF WALL WITH RELIEF WELLS
SCALE: NONE

CONSTRUCTION SEQUENCE:

1. DEGRADE EXISTING LEVEE.
2. CONSTRUCT CUTOFF WALL.
3. RECONSTRUCT LEVEE EMBANKMENT.
4. INSTALL ADDITIONAL RELIEF WELLS (WHERE APPLICABLE)

NOT FOR CONSTRUCTION

US Army Corps of Engineers®
Sacramento District

Symbol	Description	Date	Approved
D8	DESCRIPTION8	DATE8	APPROVAL8
D7	DESCRIPTION7	DATE7	APPROVAL7
D6	DESCRIPTION6	DATE6	APPROVAL6
D5	DESCRIPTION5	DATE5	APPROVAL5
D4	DESCRIPTION4	DATE4	APPROVAL4
D3	DESCRIPTION3	DATE3	APPROVAL3
D2	DESCRIPTION2	DATE2	APPROVAL2
D1	DESCRIPTION1	DATE1	APPROVAL1

Designed by: –
Dwn by: –
Spec No.: –
Reviewed by: –
Submitted by: –
CHIEF, CIV ENGR DES SEC A
Date: –
Design file no: –
Drawing Code: –
File name: $$$$date$$$$
Plot date:
Plot scale: –
Rev. –

DEPARTMENT OF THE ARMY
CORPS OF ENGINEERS
SACRAMENTO, CALIFORNIA

SACRAMENTO DISTRICT
IN-HOUSE DESIGN
1325 "J" STREET
SACRAMENTO, CA 95814-2922

SUTTER & BUTTE COUNTY CALIFORNIA
SUTTER BASIN PILOT FEASIBILITY STUDY
DRAFT REPORT
ALTERNATIVE SB-7 AND SB-8
TYPICAL LEVEE IMPROVEMENT – CUTOFF WALL WITH SEEPAGE BERM OR RELIEF WELLS

Sheet reference number:
C-303

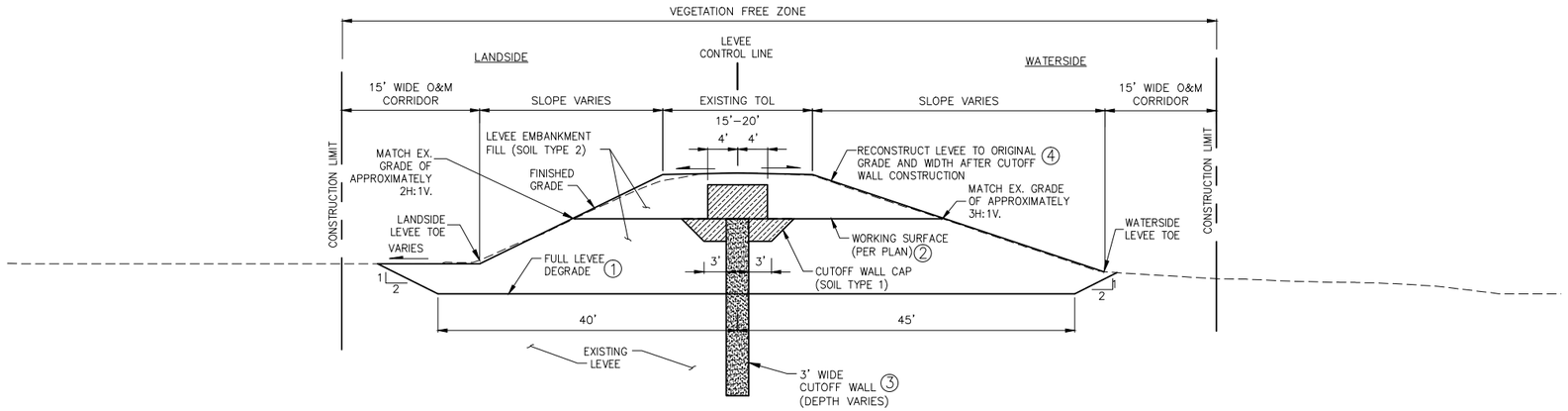

TYPICAL CUTOFF WALL WITH FULL LEVEE DEGRADE

SCALE: NONE

CONSTRUCTION SEQUENCE:

1. DEGRADE EXISTING LEVEE.
2. FILL UP TO WORKING SURFACE ELEVATION
3. CONSTRUCT CUTOFF WALL.
4. RECONSTRUCT LEVEE EMBANKMENT.

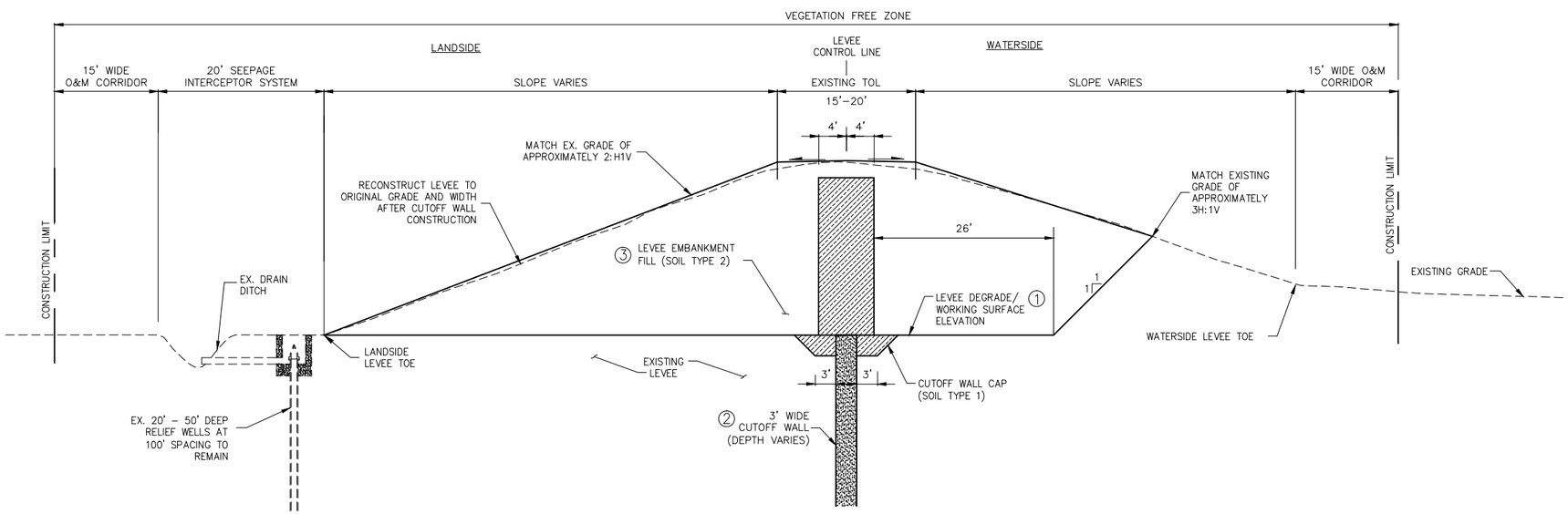

TYPICAL CUTOFF WALL WITH FULL LEVEE DEGRADE AND RELIEF WELLS

SCALE: NONE

CONSTRUCTION SEQUENCE:

1. DEGRADE EXISTING LEVEE.
2. CONSTRUCT CUTOFF WALL.
3. RECONSTRUCT LEVEE EMBANKMENT.

NOT FOR CONSTRUCTION

US Army Corps of Engineers®
Sacramento District

Symbol	Description	Date	Approved
D8	DESCRIPTION8	DATE8	APPROVAL8
D7	DESCRIPTION7	DATE7	APPROVAL7
D6	DESCRIPTION6	DATE6	APPROVAL6
D5	DESCRIPTION5	DATE5	APPROVAL5
D4	DESCRIPTION4	DATE4	APPROVAL4
D3	DESCRIPTION3	DATE3	APPROVAL3
D2	DESCRIPTION2	DATE2	APPROVAL2
D1	DESCRIPTION1	DATE1	APPROVAL1

Designed by: –
Dwn by: –
Spec No.: –
Reviewed by: –
Submitted by: –
CHIEF, CIV ENGR DES SEC A
Date: –
Design file no: –
Drawing Code: –
File name: $$$$date$$$$
Plot date: –
Plot scale: –
Rev. –

DEPARTMENT OF THE ARMY
CORPS OF ENGINEERS
SACRAMENTO, CALIFORNIA

SACRAMENTO DISTRICT
IN-HOUSE DESIGN
1325 "J" STREET
SACRAMENTO, CA 95814-2922

SUTTER & BUTTE COUNTY CALIFORNIA
SUTTER BASIN PILOT FEASIBILITY STUDY
DRAFT REPORT
ALTERNATIVE SB-7 AND SB-8
TYPICAL LEVEE IMPROVEMENT – CUTOFF WALL WITH FULL LEVEE DEGRADE AND RELIEF WELLS

Sheet reference number:
C-304

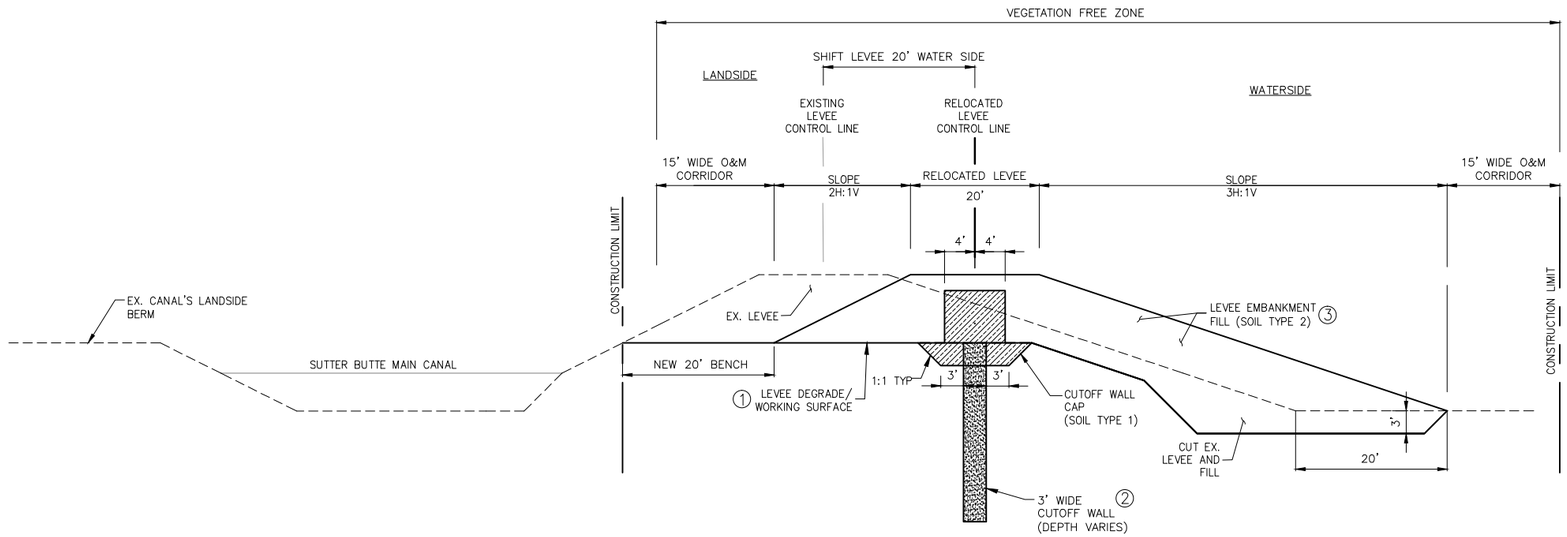

TYPICAL CUTOFF WALL WITH LEVEE RELOCATION

SCALE: NONE

CONSTRUCTION SEQUENCE:

1. DEGRADE EXISTING LEVEE.
2. CONSTRUCT CUTOFF WALL.
3. CONSTRUCT RELOCATED LEVEE EMBANKMENT.

NOT FOR CONSTRUCTION

US Army Corps of Engineers®
Sacramento District

Symbol	Description	Date	Approved
D8	DESCRIPTION8	DATE8	APPROVAL8
D7	DESCRIPTION7	DATE7	APPROVAL7
D6	DESCRIPTION6	DATE6	APPROVAL6
D5	DESCRIPTION5	DATE5	APPROVAL5
D4	DESCRIPTION4	DATE4	APPROVAL4
D3	DESCRIPTION3	DATE3	APPROVAL3
D2	DESCRIPTION2	DATE2	APPROVAL2
D1	DESCRIPTION1	DATE1	APPROVAL1

Designed by: –
Dwn by: –
Spec No.: –
Reviewed by: –
Submitted by: –
CHIEF, CIV ENGR DES SEC A
Date: –
Design file no: –
Drawing Code: –
File name: $$$$date$$$$
Plot date:
Plot scale: –
Rev. –

DEPARTMENT OF THE ARMY
CORPS OF ENGINEERS
SACRAMENTO, CALIFORNIA

SACRAMENTO DISTRICT
IN-HOUSE DESIGN
1325 "J" STREET
SACRAMENTO, CA 95814-2922

SUTTER & BUTTE COUNTY CALIFORNIA
SUTTER BASIN PILOT FEASIBILITY STUDY
DRAFT REPORT
ALTERNATIVE SB-7 AND SB-8
TYPICAL LEVEE IMPROVEMENT – CUTOFF WALL WITH LEVEE RELOCATION

Sheet reference number:
C-305

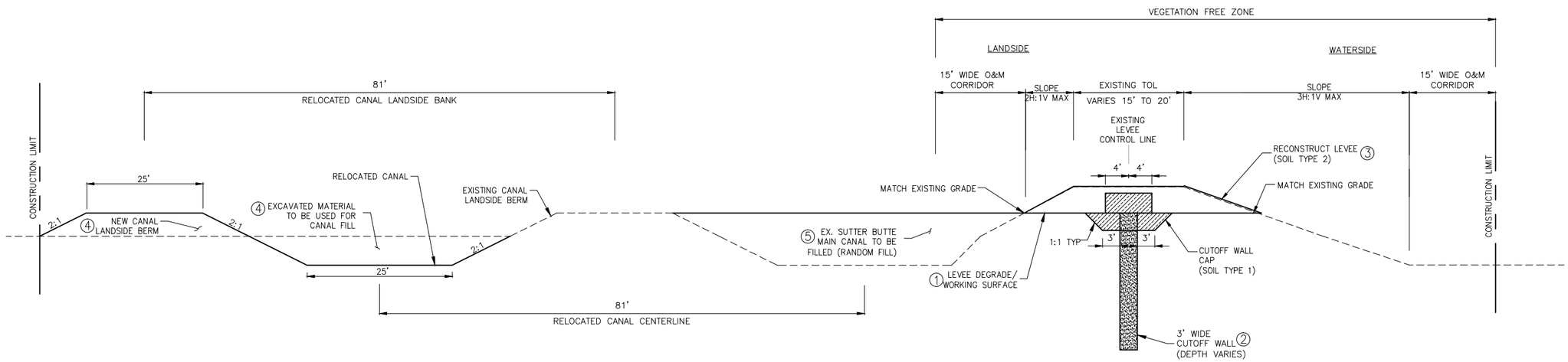

TYPICAL CUTOFF WALL WITH CANAL RELOCATION

SCALE: NONE

CONSTRUCTION SEQUENCE:

1. DEGRADE EXISTING LEVEE.
2. CONSTRUCT CUTOFF WALL.
3. RECONSTRUCT LEVEE EMBANKMENT.
4. EXCAVATE NEW SUTTER BUTTE CANAL AND CONSTRUCT NEW CANAL LANDSIDE BERM.
5. FILL SUTTER BUTTE CANAL WITH EXCAVATED MATERIAL

NOT FOR CONSTRUCTION

US Army Corps of Engineers®
Sacramento District

Symbol	Description	Date	Approved
D8	DESCRIPTION8	DATE8	APPROVAL8
D7	DESCRIPTION7	DATE7	APPROVAL7
D6	DESCRIPTION6	DATE6	APPROVAL6
D5	DESCRIPTION5	DATE5	APPROVAL5
D4	DESCRIPTION4	DATE4	APPROVAL4
D3	DESCRIPTION3	DATE3	APPROVAL3
D2	DESCRIPTION2	DATE2	APPROVAL2
D1	DESCRIPTION1	DATE1	APPROVAL1

Designed by: –
Dwn by: –
Spec No.: –
Reviewed by: –
Submitted by: –
CHIEF, CIV ENGR DES SEC A
Date: –
Design file no: –
Drawing Code: –
File name: $$$$date$$$$
Plot date:
Plot scale: –
Rev. –

DEPARTMENT OF THE ARMY
CORPS OF ENGINEERS
SACRAMENTO, CALIFORNIA

SACRAMENTO DISTRICT
IN-HOUSE DESIGN
1325 "J" STREET
SACRAMENTO, CA 95814-2922

SUTTER & BUTTE COUNTY CALIFORNIA
SUTTER BASIN PILOT FEASIBILITY STUDY
DRAFT REPORT
ALTERNATIVE SB-7 AND SB-8
TYPICAL LEVEE IMPROVEMENT – CUTOFF WALL WITH CANAL RELOCATION

Sheet reference number:
C-306

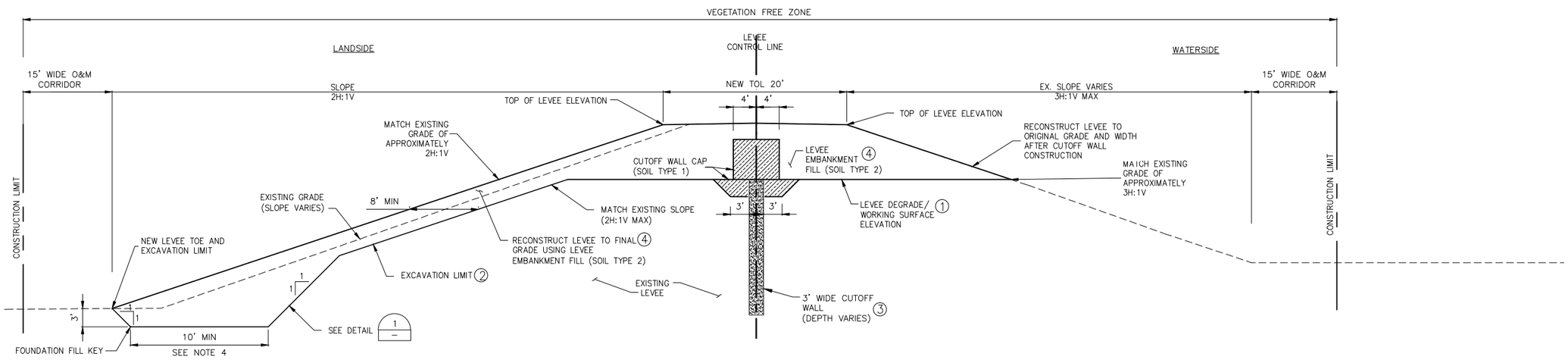

TYPICAL CUTOFF WALL WITH LANDSIDE TOE FILL

SCALE: NONE

CONSTRUCTION SEQUENCE:

1. DEGRADE EXISTING LEVEE.
2. EXCAVATE LANDSIDE OF EXISTING LEVEE.
3. CONSTRUCT CUTOFF WALL.
4. RECONSTRUCT LEVEE EMBANKMENT.

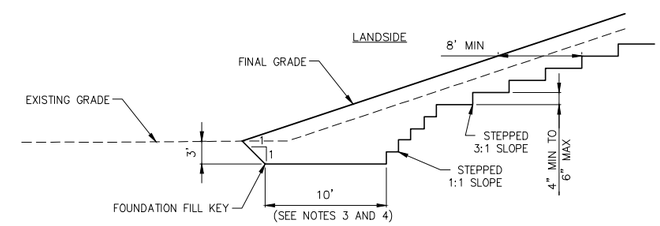

1 — FILL KEY AND BENCHING DETAIL

NTS

TYPICAL KEY & BENCHING NOTES:

1. PLACE FILL IN HORIZONTAL LIFTS AGAINST VERTICAL FACES CUT INTO EXISTING LEVEE MATERIAL.
2. THE BOTTOM OF THE KEY TRENCH SHALL BE SCARIFIED TO A DEPTH OF 8 INCHES AND RECOMPACTED TO 95% MAXIMUM DENSITY PER ASTM D698.
3. THE LEVEE KEY TRENCH SHALL BE INSPECTED BY THE AGENCY'S GEOTECHNICAL ENGINEER BEFORE PLACEMENT OF FILL.
4. WHERE EMBANKMENT FILL IS GREATER THAN 10' IN WIDTH, FOUNDATION KEY SHALL EXTEND FROM THE TOE OF THE NEW LEVEE TO THE TOE OF THE EXISTING LEVEE. IN NO CASE SHALL THE FOUNDATION KEY WIDTH BE LESS THAN 10'.

NOT FOR CONSTRUCTION

US Army Corps of Engineers®
Sacramento District

Symbol	Description	Date	Approved
D8	DESCRIPTION8	DATE8	APPROVAL8
D7	DESCRIPTION7	DATE7	APPROVAL7
D6	DESCRIPTION6	DATE6	APPROVAL6
D5	DESCRIPTION5	DATE5	APPROVAL5
D4	DESCRIPTION4	DATE4	APPROVAL4
D3	DESCRIPTION3	DATE3	APPROVAL3
D2	DESCRIPTION2	DATE2	APPROVAL2
D1	DESCRIPTION1	DATE1	APPROVAL1

Designed by: –
Dwn by: –
Spec No.: –
Reviewed by: –
Submitted by: –
CHIEF, CIV ENGR DES SEC A
Date: –
Design file no: –
Drawing Code: –
File name: $$$$cmd$$$$
Plot date: –
Plot scale: –
Rev. –

DEPARTMENT OF THE ARMY
CORPS OF ENGINEERS
SACRAMENTO, CALIFORNIA

SACRAMENTO DISTRICT
IN-HOUSE DESIGN
1325 "J" STREET
SACRAMENTO, CA 95814-2922

SUTTER & BUTTE COUNTY CALIFORNIA
SUTTER BASIN PILOT FEASIBILITY STUDY
DRAFT REPORT
ALTERNATIVE SB-7 AND SB-8
TYPICAL LEVEE IMPROVEMENT – TYPICAL CUTOFF WALL WITH LANDSIDE TOE FILL

Sheet reference number:
C-307

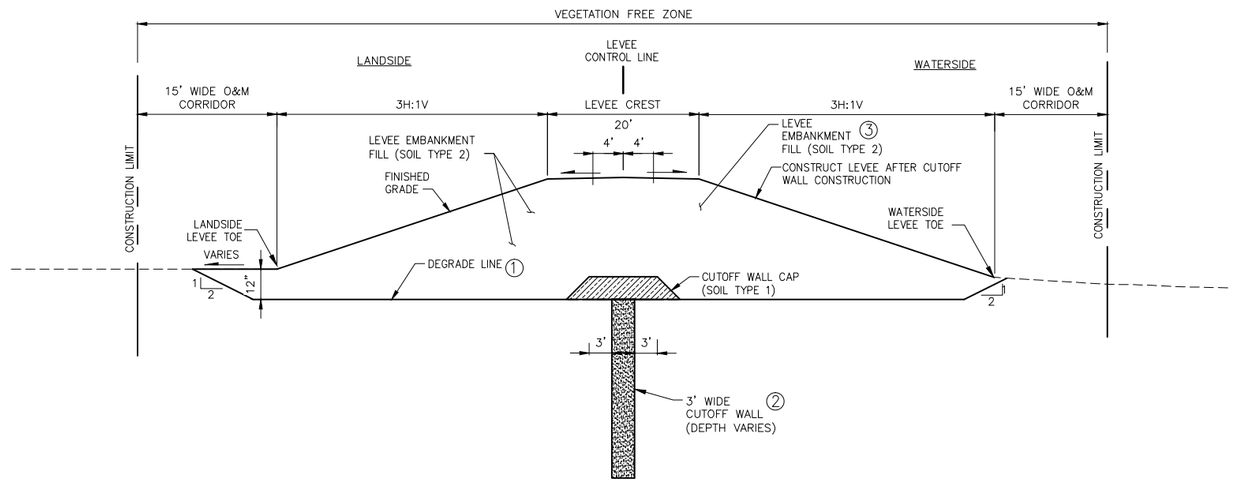

TYPICAL NEW LEVEE WITH CUTOFF WALL

SCALE: NONE

CONSTRUCTION SEQUENCE:

1. EXCAVATE TO DEGRADE LINE
2. CONSTRUCT CUTOFF WALL.
3. CONSTRUCT LEVEE EMBANKMENT.

NOT FOR CONSTRUCTION

US Army Corps of Engineers®
Sacramento District

Symbol	Description	Date	Approved
D8	DESCRIPTION8	DATE8	APPROVAL8
D7	DESCRIPTION7	DATE7	APPROVAL7
D6	DESCRIPTION6	DATE6	APPROVAL6
D5	DESCRIPTION5	DATE5	APPROVAL5
D4	DESCRIPTION4	DATE4	APPROVAL4
D3	DESCRIPTION3	DATE3	APPROVAL3
D2	DESCRIPTION2	DATE2	APPROVAL2
D1	DESCRIPTION1	DATE1	APPROVAL1

DEPARTMENT OF THE ARMY
CORPS OF ENGINEERS
SACRAMENTO, CALIFORNIA

Designed by: –
Dwn by: –
Spec No.: –
Reviewed by: –
Date: –
Design file no: –
Drawing Code: –
Submitted by: –
Chief, CIV ENGR DES SEC A
File name: –
Plot date: $$$$date$$$$
Plot scale: –
Rev. –

SACRAMENTO DISTRICT
IN-HOUSE DESIGN
1325 "J" STREET
SACRAMENTO, CA 95814-2922

SUTTER & BUTTE COUNTY CALIFORNIA
SUTTER BASIN PILOT FEASIBILITY STUDY
DRAFT REPORT
ALTERNATIVE SB-7 AND SB-8
TYPICAL LEVEE IMPROVEMENT – NEW LEVEE WITH CUTOFF WALL

Sheet reference number:
C-308

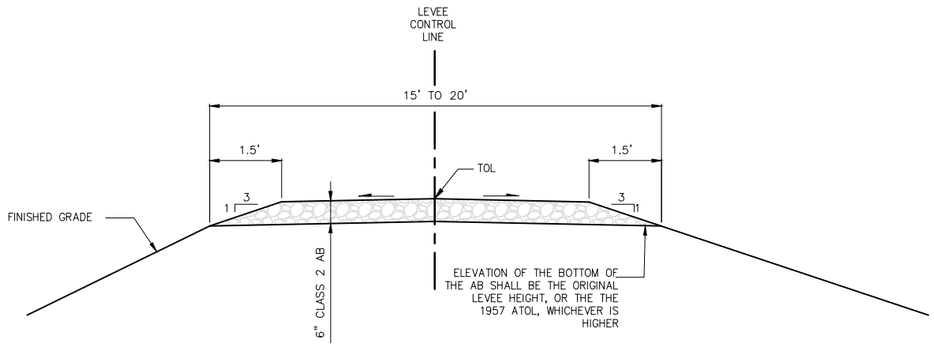

CROWN SURFACING DETAIL (TYP)

NTS

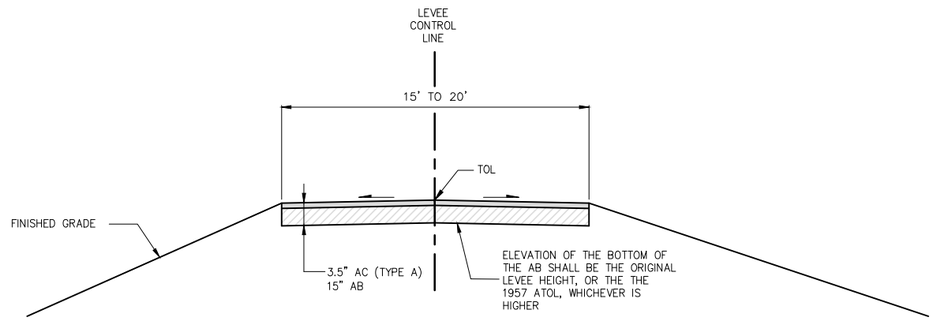

PAVED LEVEE ROAD SECTION

NTS

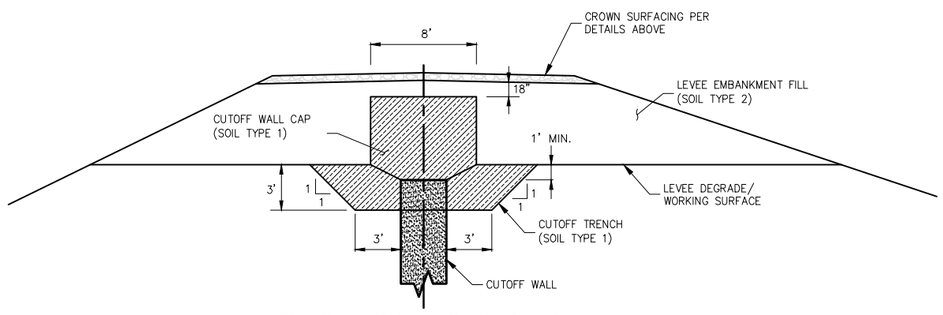

CUTOFF WALL CAP DETAIL

NTS

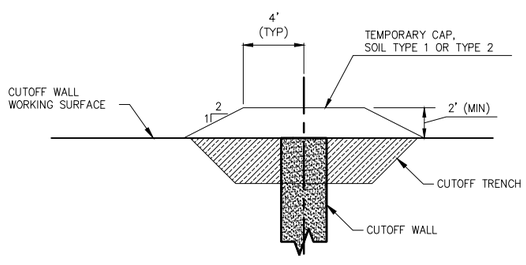

TEMPORARY CAP DETAIL

NTS

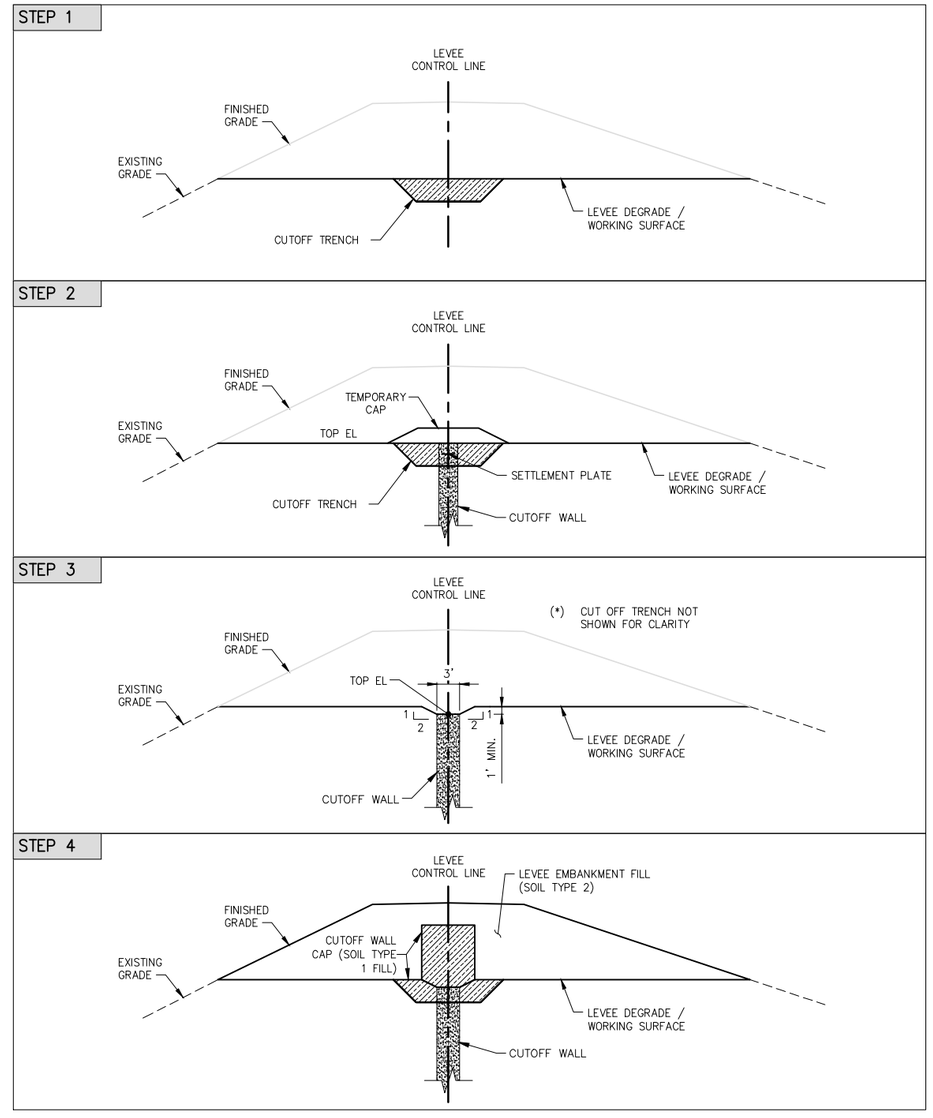

TYPICAL CUTOFF WALL CONSTRUCTION SEQUENCE

NTS

NOT FOR CONSTRUCTION

US Army Corps of Engineers®
Sacramento District

Symbol	Description	Date	Approved
D8	DESCRIPTION8	DATE8	APPROVAL8
D7	DESCRIPTION7	DATE7	APPROVAL7
D6	DESCRIPTION6	DATE6	APPROVAL6
D5	DESCRIPTION5	DATE5	APPROVAL5
D4	DESCRIPTION4	DATE4	APPROVAL4
D3	DESCRIPTION3	DATE3	APPROVAL3
D2	DESCRIPTION2	DATE2	APPROVAL2
D1	DESCRIPTION1	DATE1	APPROVAL1

Designed by: –
Dwn by: –
Reviewed by: –
Submitted by: –
CHIEF, CIV ENGR DES SEC A
Date: –
Spec No.: –
Design file no: –
Drawing Code: –
File name: $$$$date$$$$
Plot date: –
Plot scale: –
Rev. –

DEPARTMENT OF THE ARMY
CORPS OF ENGINEERS
SACRAMENTO, CALIFORNIA

SACRAMENTO DISTRICT
IN-HOUSE DESIGN
1325 "J" STREET
SACRAMENTO, CA 95814-2922

SUTTER & BUTTE COUNTY CALIFORNIA
SUTTER BASIN PILOT FEASIBILITY STUDY
DRAFT REPORT
ALTERNATIVE SB-7 AND SB-8
TYPICAL LEVEE IMPROVEMENT – MISC. DETAILS

Sheet reference number:
C-309

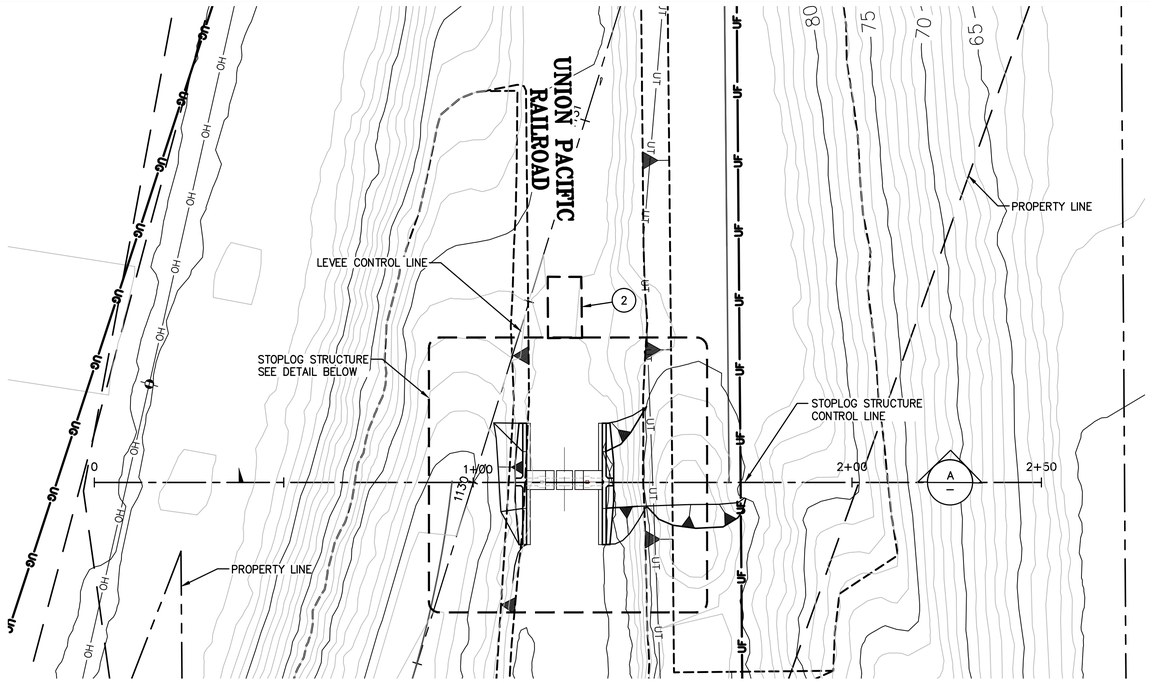

STOPLOG STRUCTURE – PLAN

SCALE: 1"= 20'

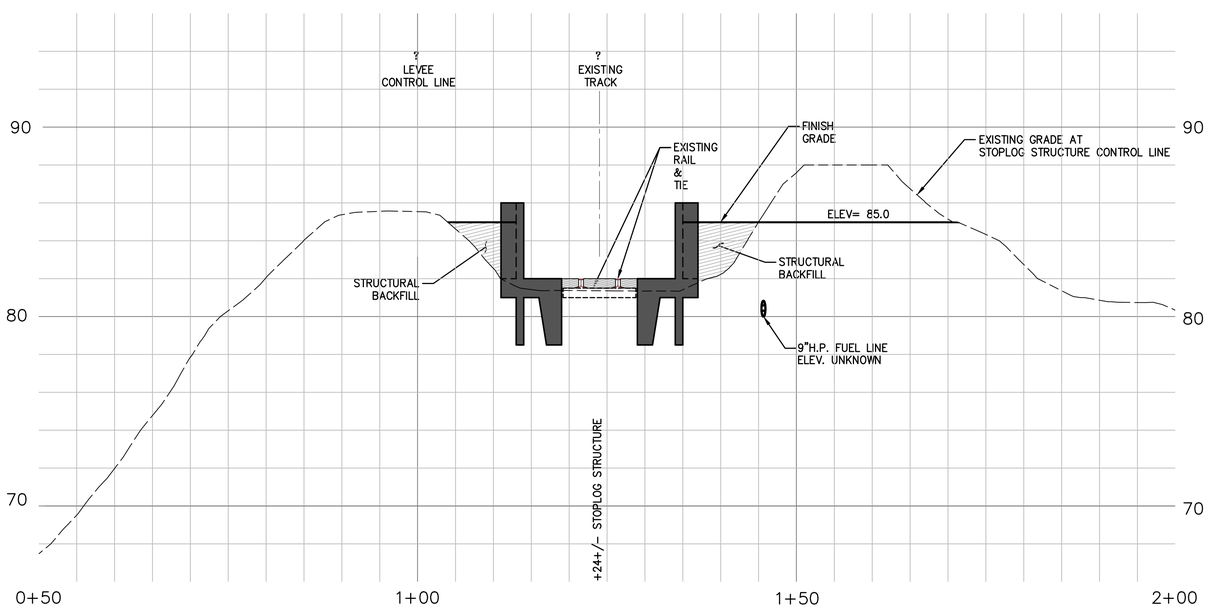

STOPLOG STRUCTURE – ELEVATION

60

CONSTRUCTION NOTES:

1. CUTOFF WALL AND LEVEE DEGRADE NOT SHOWN, SEE DWG C-314 FOR WALL LOCATION AND LEVEE EXCAVATIONS.
2. EXISTING CONCRETE PANELS TO REMAIN.

NOT FOR CONSTRUCTION

US Army Corps of Engineers®
Sacramento District

Symbol	Description	Date	Approved
D8	DESCRIPTION8	DATE8	APPROVAL8
D7	DESCRIPTION7	DATE7	APPROVAL7
D6	DESCRIPTION6	DATE6	APPROVAL6
D5	DESCRIPTION5	DATE5	APPROVAL5
D4	DESCRIPTION4	DATE4	APPROVAL4
D3	DESCRIPTION3	DATE3	APPROVAL3
D2	DESCRIPTION2	DATE2	APPROVAL2
D1	DESCRIPTION1	DATE1	APPROVAL1

Designed by: –
Dwn by: –
Reviewed by: –
Submitted by: –
CHIEF, DIV ENGR DES SEC A

Date: –
Spec No.: –
Design file no: –
Drawing Code: –
File name: –
Plot date: $$$$date$$$$
Plot scale: –
Rev. –

DEPARTMENT OF THE ARMY
CORPS OF ENGINEERS
SACRAMENTO, CALIFORNIA

SACRAMENTO DISTRICT
IN-HOUSE DESIGN
1325 J STREET
SACRAMENTO, CA 95814-2922

SUTTER & BUTTE COUNTY CALIFORNIA
SUTTER BASIN PILOT FEASIBILITY STUDY
DRAFT REPORT

ALTERNATIVE SB-7 AND SB-8

TYPICAL LEVEE IMPROVEMENT – STOP LOG STRUCTURE

Sheet reference number:

C-310

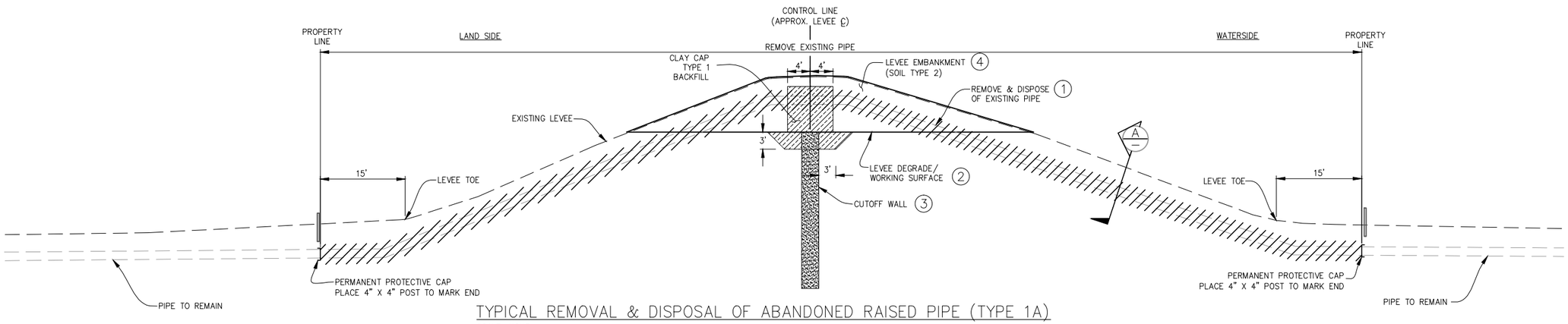

TYPICAL REMOVAL & DISPOSAL OF ABANDONED RAISED PIPE (TYPE 1A)

SCALE: NONE

CONSTRUCTION SEQUENCE:

1. EXCAVATE, REMOVE AND DISPOSE OF EXISTING PIPE OFFSITE, AND BACKFILL UP TO WORKING SURFACE.
2. DEGRADE EXISTING LEVEE.
3. CONSTRUCT CUTOFF WALL.
4. RECONSTRUCT LEVEE EMBANKMENT.

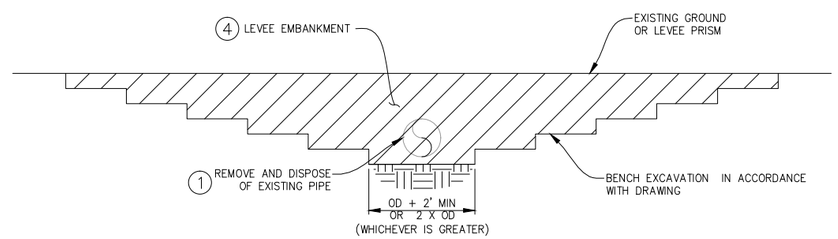

SECTION (A/1)

SCALE: NONE

SCHEDULE OF RAISED PIPE REMOVALS		
EXISTING STATION	EXISTING PIPE DIA.	APPROX. DEPTH
219+00	12 IN	UNKNOWN
365+00	8 IN	4.8 FT
386+63	8 IN	4.6 FT
396+32	8 IN	4.1 FT
442+80	8 IN	4.1 FT
460+11	8 IN	4.1 FT
529+47	6 IN	4.0 FT
536+64	5 IN	2.0 FT
545+41	8 IN	3.1 FT
856+23	24 IN	5.2 FT
881+39	6 IN	5.1 FT
881+43	14 IN	5.1 FT
988+05	3 IN	UNKNOWN
1020+85	4 IN	UNKNOWN
1037+50	8 IN	UNKNOWN
1180+50	12 IN	UNKNOWN
1180+98	3 IN	UNKNOWN
1181+50	8 IN	UNKNOWN
1524+35	6 IN	UNKNOWN
1532+40	6 IN	UNKNOWN
1888+50	6 IN	5.2 FT
1893+60	1 IN	UNKNOWN

NOT FOR CONSTRUCTION

US Army Corps of Engineers®
Sacramento District

Symbol	Description	Date	Approved
D8	DESCRIPTION8	DATE8	APPROVAL8
D7	DESCRIPTION7	DATE7	APPROVAL7
D6	DESCRIPTION6	DATE6	APPROVAL6
D5	DESCRIPTION5	DATE5	APPROVAL5
D4	DESCRIPTION4	DATE4	APPROVAL4
D3	DESCRIPTION3	DATE3	APPROVAL3
D2	DESCRIPTION2	DATE2	APPROVAL2
D1	DESCRIPTION1	DATE1	APPROVAL1

Designed by: –
Dwn by: –
Spec No.: –
Reviewed by: –
Submitted by: –
CHIEF, CIV ENGR DES SEC A
Date: –
Design file no: –
Drawing Code: –
File name: $$$$cmd$$$$
Plot date: –
Plot scale: –
Rev. –

DEPARTMENT OF THE ARMY
CORPS OF ENGINEERS
SACRAMENTO, CALIFORNIA

SACRAMENTO DISTRICT
IN-HOUSE DESIGN
1325 "J" STREET
SACRAMENTO, CA 95814-2922

SUTTER & BUTTE COUNTY CALIFORNIA
SUTTER BASIN PILOT FEASIBILITY STUDY
DRAFT REPORT
ALTERNATIVE SB-7 AND SB-8
TYPICAL UTILITY IMPROVEMENT – REMOVAL AND DISPOSAL OF ABANDONED RAISED PIPE

Sheet reference number:
C-401

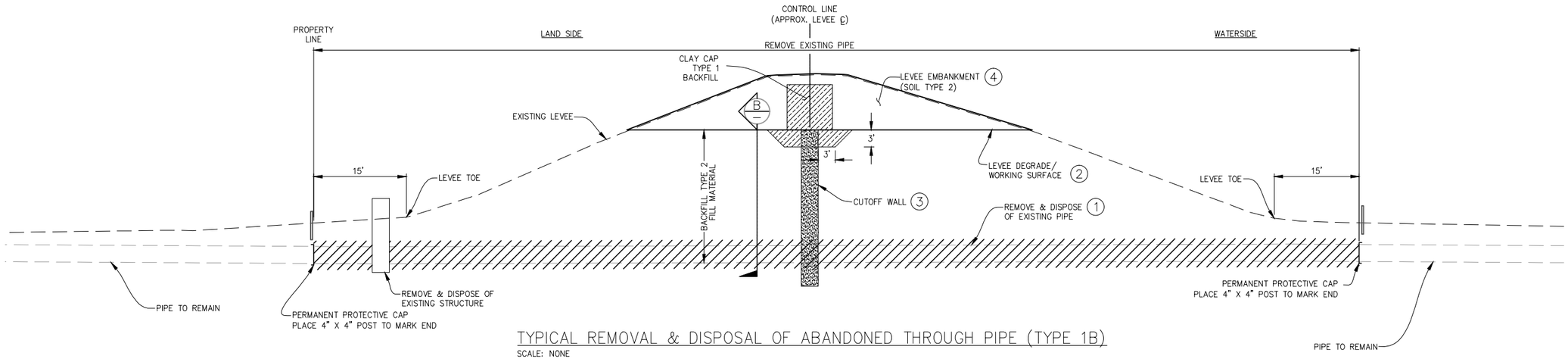

TYPICAL REMOVAL & DISPOSAL OF ABANDONED THROUGH PIPE (TYPE 1B)

SCALE: NONE

CONSTRUCTION SEQUENCE:

1. EXCAVATE, REMOVE AND DISPOSE OF EXISTING PIPE OFFSITE, AND BACKFILL UP TO WORKING SURFACE.
2. DEGRADE EXISTING LEVEE.
3. CONSTRUCT CUTOFF WALL.
4. RECONSTRUCT LEVEE EMBANKMENT.

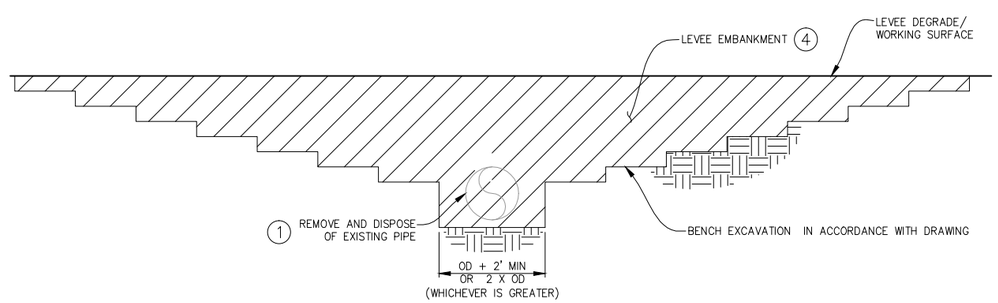

SECTION B/1

SCALE: NONE

SCHEDULE OF THROUGH PIPE REMOVALS		
EXISTING STATION	EXISTING PIPE DIA.	APPROX. DEPTH
298+89	36 IN	UNKNOWN
407+72	8 IN	21.8 FT
1043+52	27 IN	38.6 FT
1556+22	8 IN	UNKNOWN
1585+05	12 IN	UNKNOWN
1785+55	24 IN	UNKNOWN
1813+70	24 IN	UNKNOWN
1868+17	18 IN	UNKNOWN
2026+40	12 IN	13.5 FT
2032+90	12 IN	14.0 FT
2201+87	10 IN	13.1 FT
2268+27	24 IN	18.4 FT
2312+05	24 IN	UNKNOWN
2352+80	24 IN	UNKNOWN

NOT FOR CONSTRUCTION

US Army Corps of Engineers®
Sacramento District

Symbol	Description	Date	Approved
D8	DESCRIPTION8	DATE8	APPROVAL8
D7	DESCRIPTION7	DATE7	APPROVAL7
D6	DESCRIPTION6	DATE6	APPROVAL6
D5	DESCRIPTION5	DATE5	APPROVAL5
D4	DESCRIPTION4	DATE4	APPROVAL4
D3	DESCRIPTION3	DATE3	APPROVAL3
D2	DESCRIPTION2	DATE2	APPROVAL2
D1	DESCRIPTION1	DATE1	APPROVAL1

DEPARTMENT OF THE ARMY
CORPS OF ENGINEERS
SACRAMENTO, CALIFORNIA

SACRAMENTO DISTRICT
IN-HOUSE DESIGN
1325 "J" STREET
SACRAMENTO, CA 95814-2922

Designed by: –
Dwn by: –
Spec No.: –
Reviewed by: –
Submitted by: –
CHIEF, CIV ENGR DES SEC A
Date: –
Design file no: –
Drawing Code: –
File name: $$$$cmd$$$$
Plot date: –
Plot scale: –
Rev. –

SUTTER & BUTTE COUNTY CALIFORNIA
SUTTER BASIN PILOT FEASIBILITY STUDY
DRAFT REPORT
ALTERNATIVE SB-7 AND SB-8
TYPICAL UTILITY IMPROVEMENT – REMOVAL AND DISPOSAL OF ABANDONED THROUGH PIPE

Sheet reference number:
C-402

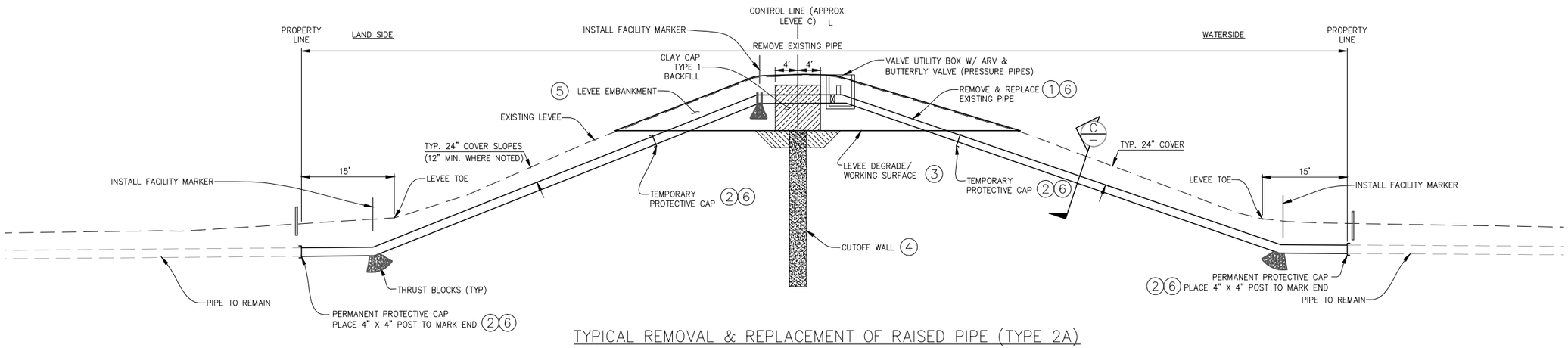

TYPICAL REMOVAL & REPLACEMENT OF RAISED PIPE (TYPE 2A)

SCALE: NONE

SCHEDULE OF RAISED PIPE REPLACEMENTS			
EXISTING STATION	EXISTING PIPE DIA.	APPROX. DEPTH	NEW PIPE DIA.
209+23	14 IN	3.0 FT	14 IN
409+50	18 IN	1.7 FT	18 IN
409+55	14 IN	1.4 FT	14 IN
409+58	18 IN	0.8 FT	18 IN
409+62	18 IN	0.8 FT	18 IN
409+66	18 IN	0.8 FT	18 IN
409+84	2 IN	2.0 FT	2 IN
512+06	2–15 IN	3.8 FT	2–15 IN
647+61	26 IN	1.4 FT	26 IN
647+66	26 IN	1.4 FT	26 IN
647+70	26 IN	1.4 FT	26 IN
647+74	26 IN	1.6 FT	26 IN
664+07	8 IN	3.6 FT	8 IN
689+09	18 IN	27.6 FT	16 IN
828+55	24 IN	2.3 FT	
831+10			2–24 IN
856+08	24 IN	5.2 FT	24 IN
893+78	12 IN	3.3 FT	12 IN
893+84	16 IN	2.7 FT	16 IN
894+23	CABLE	UNKNOWN	CABLE
913+19	2–12 IN	3.0 FT	2–12 IN
972+00	2 IN	UNKNOWN	2 IN
1028+10	CABLE	UNKNOWN	CABLE
1029+10	CABLE	UNKNOWN	CABLE
1043+03	16 IN	1.3 FT	16 IN

SCHEDULE OF RAISED PIPE REPLACEMENTS			
EXISTING STATION	EXISTING PIPE DIA.	APPROX. DEPTH	NEW PIPE DIA.
1043+22	24 IN	4.0 FT	24 IN
1043+27	24 IN	2.0 FT	24 IN
1043+45	36 IN	5.0 FT	36 IN
1073+41	12 IN	UNKNOWN	12 IN
1079+91	8 IN	UNKNOWN	8 IN
1096+50	48 IN	N/A	48 IN
1096+62	42 IN	2.5 FT	42 IN
1096+71	24 IN	4.7 FT	24 IN
1096+81	28 IN	5.0 FT	30 IN
1111+46	16 IN	1.1 FT	16 IN
1127+48	10 IN	2.0 FT	10 IN
1131+82	CABLE	UNKNOWN	CABLE
1132+09	9 IN	UNKNOWN	9 IN
1135+31	16 IN	UNKNOWN	16 IN
1229+41	16 IN	3.0 FT	16 IN
1265+29	18 IN	UNKNOWN	18 IN
1314+80	20 IN	1.4 FT	20 IN
1347+00	CABLE	UNKNOWN	CABLE
1430+40	36 IN	15.6 FT	36 IN
1430+48	60 IN	15.6 FT	60 IN
1430+56	60 IN	15.6 FT	60 IN
1823+01	12 /24 IN	21.8 FT	12 IN
1834+42	12 /24 IN	15.4 FT	12 IN
1849+80	18 IN	2.8 FT	18 IN
2004+86	7 IN	14.0 FT	7 IN
2084+03	5 IN	14.0 FT	5 IN
2092+90	CABLE	UNKNOWN	CABLE
2127+33	2 IN	2.0 FT	2 IN
2248+30	CABLE	UNKNOWN	CABLE
2283+44	1 IN	UNKNOWN	1 IN
2283+44	8 /24IN	17.3 FT	8 IN
2345+79	10 IN	12.7 FT	10 IN

CONSTRUCTION SEQUENCE:

1. EXCAVATE, REMOVE AND DISPOSE OF EXISTING PIPE OFFSITE, AND BACKFILL UP TO DEGRADE / WORKING SURFACE.
2. PROVIDE CAP AND MARKER AT THE END OF THE EXISTING PIPE WITH PROPER THRUST BLOCK OR RESTRAINED JOINT FOR PRESSURIZED PIPES.
3. DEGRADE EXISTING LEVEE.
4. CONSTRUCT CUTOFF WALL.
5. RECONSTRUCT LEVEE EMBANKMENT.
6. EXCAVATE, INSTALL NEW PIPE, CONNECT TO EXISTING PIPE, INSTALL MARKER AND BACKFILL

NOTE: THE BOTTOM OF THE NEW PIPE SHALL BE ABOVE THE FREEBOARD ELEVATION AT THE LEVEE CROWN

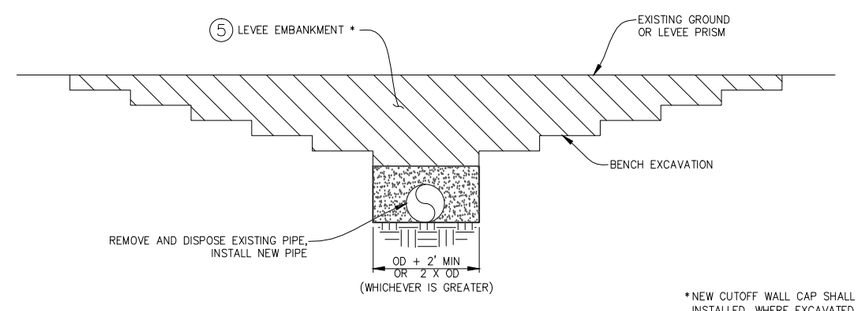

SECTION C

SCALE: NONE

*NEW CUTOFF WALL CAP SHALL BE INSTALLED, WHERE EXCAVATED, FOUR (4) FEET BOTH SIDES FOR WALL.

NOT FOR CONSTRUCTION

US Army Corps of Engineers®
Sacramento District

Symbol	Description	Date	Approved
D8	DESCRIPTION8	DATE8	APPROVAL8
D7	DESCRIPTION7	DATE7	APPROVAL7
D6	DESCRIPTION6	DATE6	APPROVAL6
D5	DESCRIPTION5	DATE5	APPROVAL5
D4	DESCRIPTION4	DATE4	APPROVAL4
D3	DESCRIPTION3	DATE3	APPROVAL3
D2	DESCRIPTION2	DATE2	APPROVAL2
D1	DESCRIPTION1	DATE1	APPROVAL1

Designed by: –
Dwn by: –
Reviewed by: –
Submitted by: –
CHIEF, CIV ENGR DES SEC A
Date: –
Spec No.: –
Design file no: –
Drawing Code: –
File name: –
Plot date: $$$$date$$$$
Plot scale: –
Rev. –

DEPARTMENT OF THE ARMY
CORPS OF ENGINEERS
SACRAMENTO, CALIFORNIA

SACRAMENTO DISTRICT
IN-HOUSE DESIGN
1325 "J" STREET
SACRAMENTO, CA 95814-2922

SUTTER & BUTTE COUNTY CALIFORNIA
SUTTER BASIN PILOT FEASIBILITY STUDY
DRAFT REPORT
ALTERNATIVE SB-7 AND SB-8
TYPICAL UTILITY IMPROVEMENT – REMOVAL AND REPLACEMENT OF RAISED PIPE

Sheet reference number:
C-403

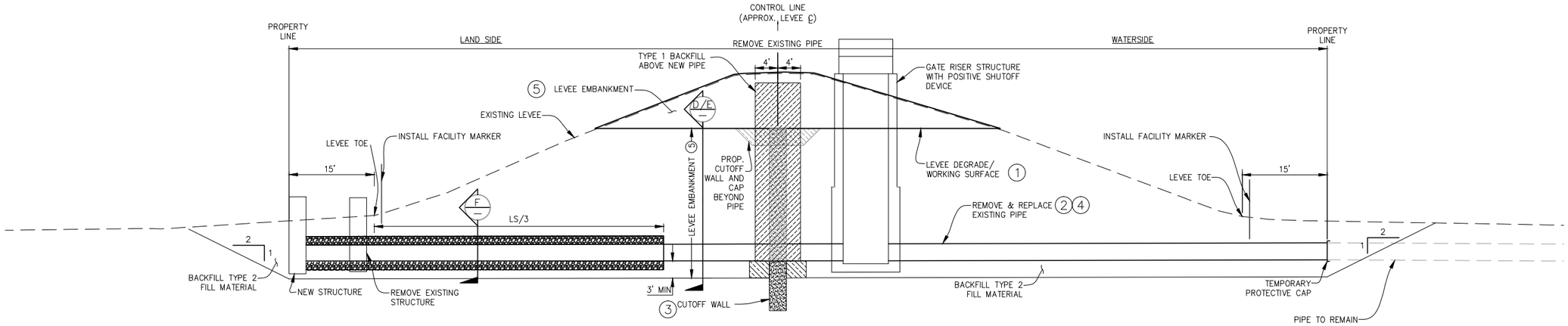

TYPICAL REMOVAL & REPLACEMENT OF THROUGH PIPE (TYPE 2B)

SCALE: NONE

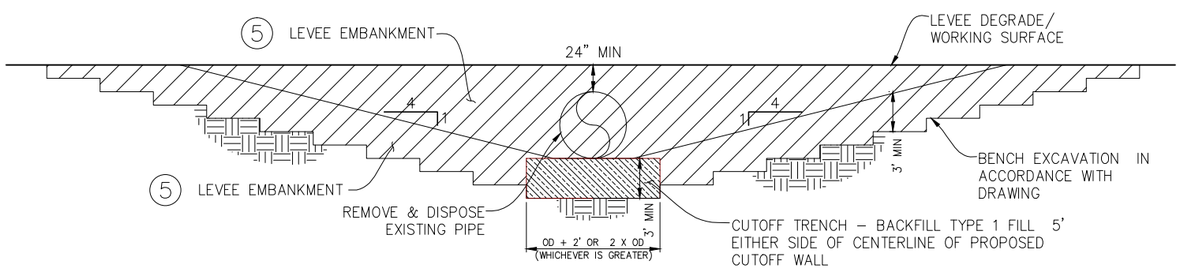

SECTION D

SCALE: NONE

CONSTRUCTION SEQUENCE:

1. DEGRADE EXISTING LEVEE.
2. EXCAVATE, REMOVE AND DISPOSE OF EXISTING PIPE OFFSITE, AND BACKFILL UP TO WORKING SURFACE (SEE SECTION D).
3. CONSTRUCT CUTOFF WALL.
4. EXCAVATE, INSTALL NEW PIPE AND BACKFILL UP TO WORKING SURFACE (SEE SECTION E).
5. RECONSTRUCT LEVEE EMBANKMENT FOR AREA EXCAVATED FOR PIPE AN RISER INSTALLATION.

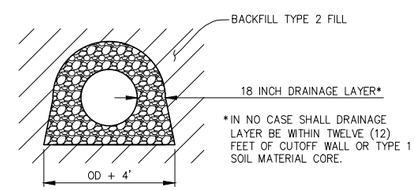

SECTION F

SCALE: NONE

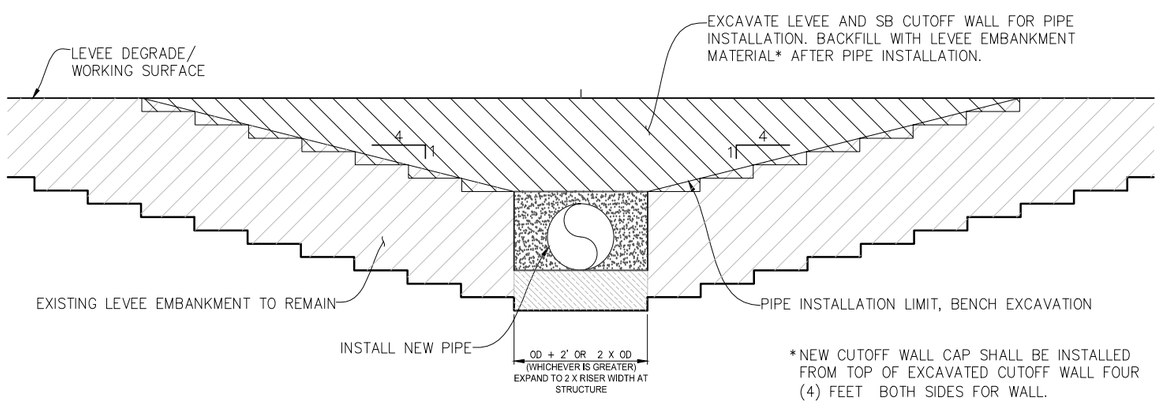

*NEW CUTOFF WALL CAP SHALL BE INSTALLED FROM TOP OF EXCAVATED CUTOFF WALL FOUR (4) FEET BOTH SIDES FOR WALL.

SECTION E

SCALE: NONE

SCHEDULE OF THROUGH PIPE REPLACEMENTS			
EXISTING STATION	EXISTING PIPE DIA.	APPROX. DEPTH RISER	NEW PIPE DIA.
298+38	54 IN	25.1 FT	54 IN
1536+12	36 IN	20.0 FT	36 IN
1549+63	12 IN	13.7 FT	36 IN
1639+00	2–24 IN	19.0 FT	36 IN
1767+57	60 IN	15.0 FT	60 IN
1765+77	60 IN	15.0 FT	60 IN
1777+00	24 IN	7.9 FT	36 IN
1785+24	24 IN	8.4 FT	36 IN
1792+96	24 IN	8.0 FT	36 IN
1809+65	24 IN	9.4 FT	24 IN
1818+72	24 IN	21.6 FT	36 IN

SCHEDULE OF THROUGH PIPE REPLACEMENTS			
EXISTING STATION	EXISTING PIPE DIA.	APPROX. DEPTH RISER	NEW PIPE DIA.
1961+03	2–60 IN	24.6 FT	2–60 IN
2017+78	22 IN	18.3 FT	36 IN
2178+39	16 IN	16.8 FT	36 IN
2239+66	24 IN	18.6 FT	36 IN
2245+52	24 IN	18.2 FT	36 IN
2250+76	24 IN	21.7 FT	36 IN
2256+71	24 IN	24.0 FT	36 IN
2256+94	24 IN	18.4 FT	36 IN
2260+55	24 IN	20.0 FT	36 IN
2262+69	24 IN	24.6 FT	36 IN
2274+86	24 IN	24.8 FT	36 IN
2274+95	24 IN	24.5 FT	36 IN
2283+65	24 IN	17.3 FT	36 IN

NOT FOR CONSTRUCTION

US Army Corps of Engineers®
Sacramento District

Symbol	Description	Date	Approved
D8	DESCRIPTION8	DATE8	APPROVAL8
D7	DESCRIPTION7	DATE7	APPROVAL7
D6	DESCRIPTION6	DATE6	APPROVAL6
D5	DESCRIPTION5	DATE5	APPROVAL5
D4	DESCRIPTION4	DATE4	APPROVAL4
D3	DESCRIPTION3	DATE3	APPROVAL3
D2	DESCRIPTION2	DATE2	APPROVAL2
D1	DESCRIPTION1	DATE1	APPROVAL1

Designed by: –
Dwn by: –
Spec No.: –
Reviewed by: –
Submitted by: –
CHIEF, CIV ENGR DES SEC A
Date: –
Design file no: –
Drawing Code: –
File name: $$$$date$$$$
Plot date:
Plot scale: –
Rev. –

DEPARTMENT OF THE ARMY
CORPS OF ENGINEERS
SACRAMENTO, CALIFORNIA

SACRAMENTO DISTRICT
IN-HOUSE DESIGN
1325 "J" STREET
SACRAMENTO, CA 95814-2922

SUTTER & BUTTE COUNTY CALIFORNIA
SUTTER BASIN PILOT FEASIBILITY STUDY
DRAFT REPORT
ALTERNATIVE SB-7 AND SB-8
TYPICAL UTILITY IMPROVEMENT – REMOVAL AND REPLACEMENT OF THROUGH PIPE

Sheet reference number:
C-404

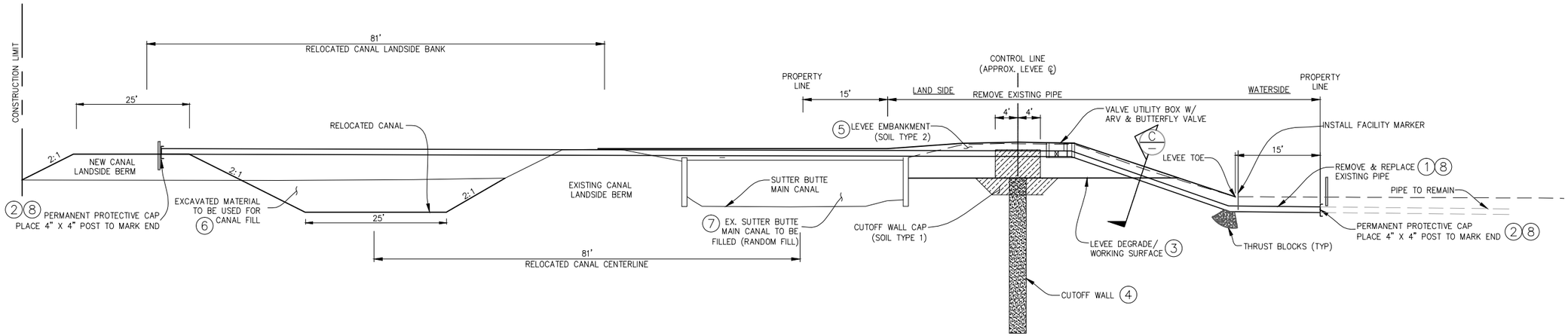

TYPICAL REMOVAL & REPLACEMENT OF RAISED PIPE WITH CANAL RELOCATION (TYPE 3A1)

SCALE: NONE

CONSTRUCTION SEQUENCE:

1. EXCAVATE, REMOVE AND DISPOSE OF EXISTING PIPE OFFSITE, AND BACKFILL UP TO DEGRADE / WORKING SURFACE.
2. PROVIDE CAP AND MARKER AT THE END OF THE EXISTING PIPE WITH PROPER THRUST BLOCK OR RESTRAINED JOINT FOR PRESSURIZED PIPES.
3. DEGRADE EXISTING LEVEE.
4. CONSTRUCT CUTOFF WALL.
5. RECONSTRUCT LEVEE EMBANKMENT.
6. EXCAVATE NEW SUTTER BUTTE CANAL AND CONSTRUCT NEW LANDSIDE BERM
7. FILL SUTTER BUTTE CANAL WITH EXCAVATED MATERIAL
8. EXCAVATE, INSTALL NEW PIPE, CONNECT TO EXISTING PIPE, INSTALL MARKER AND BACKFILL

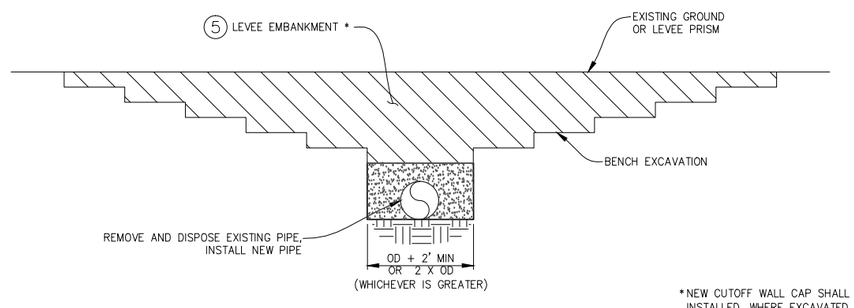

SECTION (C)

SCALE: NONE

*NEW CUTOFF WALL CAP SHALL BE INSTALLED, WHERE EXCAVATED, FOUR (4) FEET BOTH SIDES FOR WALL.

SCHEDULE OF RAISED PIPE REPLACEMENTS W/ CANAL RELOCATION			
EXISTING STATION	EXISTING PIPE DIA.	APPROX. DEPTH	NEW PIPE DIA.
1765+15	12 IN	1.0 FT	12 IN

NOT FOR CONSTRUCTION

US Army Corps of Engineers®
Sacramento District

Symbol	Description	Date	Approved
D8	DESCRIPTION8	DATE8	APPROVAL8
D7	DESCRIPTION7	DATE7	APPROVAL7
D6	DESCRIPTION6	DATE6	APPROVAL6
D5	DESCRIPTION5	DATE5	APPROVAL5
D4	DESCRIPTION4	DATE4	APPROVAL4
D3	DESCRIPTION3	DATE3	APPROVAL3
D2	DESCRIPTION2	DATE2	APPROVAL2
D1	DESCRIPTION1	DATE1	APPROVAL1

Designed by: –
Dwn by: –
Spec No.: –
Reviewed by: –
Submitted by: –
CHIEF, CIV ENGR DES SEC A
Date: –
Design file no: –
Drawing Code: –
File name: $$$$date$$$$
Plot date:
Plot scale: –
Rev. –

DEPARTMENT OF THE ARMY
CORPS OF ENGINEERS
SACRAMENTO, CALIFORNIA

SACRAMENTO DISTRICT
IN-HOUSE DESIGN
1325 "J" STREET
SACRAMENTO, CA 95814-2922

SUTTER & BUTTE COUNTY CALIFORNIA
SUTTER BASIN PILOT FEASIBILITY STUDY
DRAFT REPORT
ALTERNATIVE SB-7 AND SB-8
TYPICAL UTILITY IMPROVEMENT – REMOVAL AND REPLACEMENT OF RAISED PIPE W/ CANAL RELOCATION

Sheet reference number:
C-405

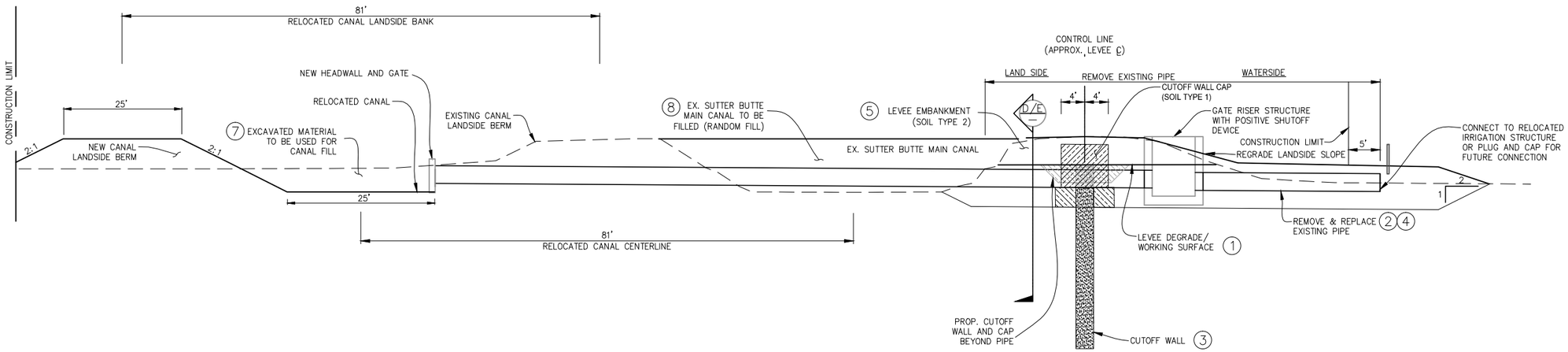

TYPICAL REMOVAL & REPLACEMENT OF THROUGH PIPE WITH CANAL RELOCATION (TYPE 3A2)

SCALE: NONE

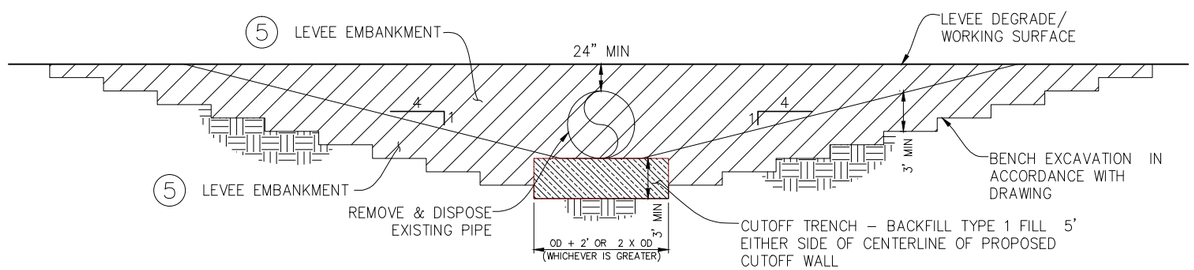

SECTION D

SCALE: NONE

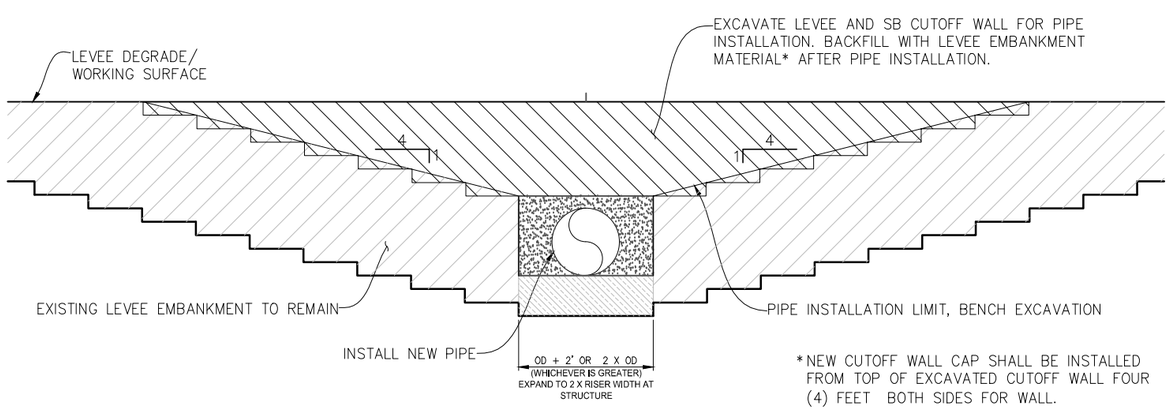

*NEW CUTOFF WALL CAP SHALL BE INSTALLED FROM TOP OF EXCAVATED CUTOFF WALL FOUR (4) FEET BOTH SIDES FOR WALL.

SECTION E

SCALE: NONE

CONSTRUCTION SEQUENCE:

1. DEGRADE EXISTING LEVEE.
2. EXCAVATE, REMOVE AND DISPOSE OF EXISTING PIPE OFFSITE, AND BACKFILL UP TO WORKING SURFACE.
3. CONSTRUCT CUTOFF WALL.
4. EXCAVATE, INSTALL NEW PIPE AND BACKFILL UP TO WORKING SURFACE.
5. RECONSTRUCT LEVEE EMBANKMENT FOR AREA EXCAVATED FOR PIPE AND RISER INSTALLATION.
6. EXCAVATE NEW SUTTER BUTTE CANAL AND CONSTRUCT LANDSIDE BERM
7. BACKFILL OLD SUTTER BUTTE CANAL

SCHEDULE OF THROUGH PIPE REPLACEMENTS WITH CANAL RELOCATION

EXISTING STATION	EXISTING PIPE DIA.	APPROX. DEPTH RISER	NEW PIPE DIA.
1756+27	12 IN	10.1 FT	18 IN
1765+33	12 IN	7.6 FT	12 IN

NOT FOR CONSTRUCTION

US Army Corps of Engineers®
Sacramento District

Symbol	Description	Date	Approved
D8	DESCRIPTION8	DATE8	APPROVAL8
D7	DESCRIPTION7	DATE7	APPROVAL7
D6	DESCRIPTION6	DATE6	APPROVAL6
D5	DESCRIPTION5	DATE5	APPROVAL5
D4	DESCRIPTION4	DATE4	APPROVAL4
D3	DESCRIPTION3	DATE3	APPROVAL3
D2	DESCRIPTION2	DATE2	APPROVAL2
D1	DESCRIPTION1	DATE1	APPROVAL1

Designed by: – Date: – Rev. –
Dwn by: – Spec No.: – Design file no: –
Reviewed by: – Drawing Code: –
Submitted by: – CHIEF, CIV ENGR DES SEC A File name: $$$$date$$$$ Plot date: Plot scale: –

DEPARTMENT OF THE ARMY
CORPS OF ENGINEERS
SACRAMENTO, CALIFORNIA

SACRAMENTO DISTRICT
IN-HOUSE DESIGN
1325 "J" STREET
SACRAMENTO, CA 95814-2922

SUTTER & BUTTE COUNTY CALIFORNIA
SUTTER BASIN PILOT FEASIBILITY STUDY
DRAFT REPORT
ALTERNATIVE SB-7 AND SB-8
TYPICAL UTILITY IMPROVEMENT – REMOVAL AND REPLACEMENT OF THROUGH PIPE W/ CANAL RELOCATION

Sheet reference number:
C-406

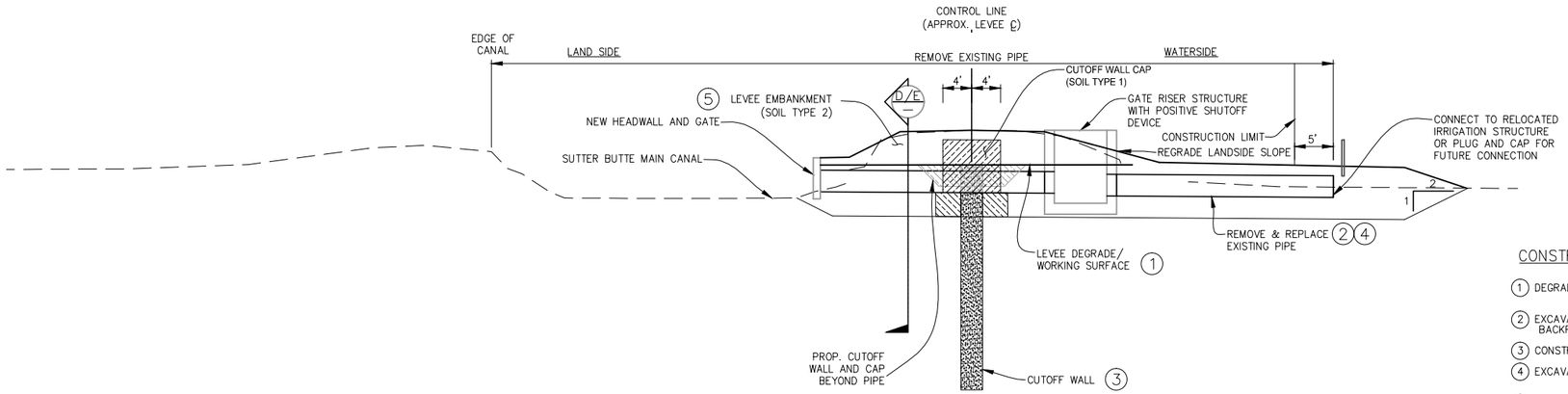

TYPICAL REMOVAL & REPLACEMENT OF THROUGH PIPE ADJACENT TO CANAL (TYPE 3B)

SCALE: NONE

CONSTRUCTION SEQUENCE:

1. DEGRADE EXISTING LEVEE.
2. EXCAVATE, REMOVE AND DISPOSE OF EXISTING PIPE OFFSITE, AND BACKFILL UP TO WORKING SURFACE.
3. CONSTRUCT CUTOFF WALL.
4. EXCAVATE, INSTALL NEW PIPE AND BACKFILL UP TO WORKING SURFACE.
5. RECONSTRUCT LEVEE EMBANKMENT FOR AREA EXCAVATED FOR PIPE AND RISER INSTALLATION.

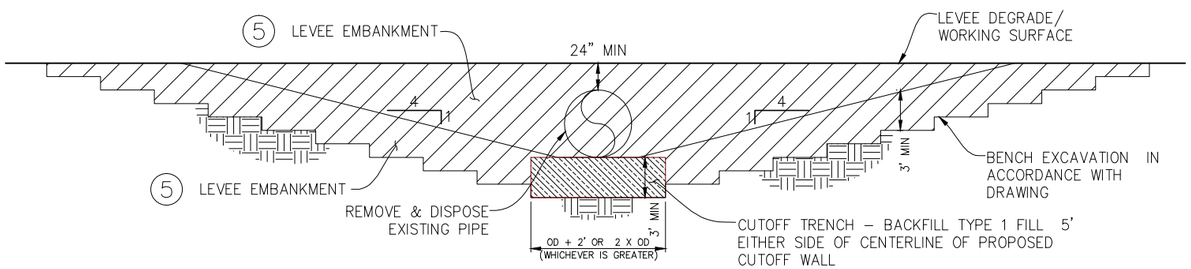

SECTION D/–

SCALE: NONE

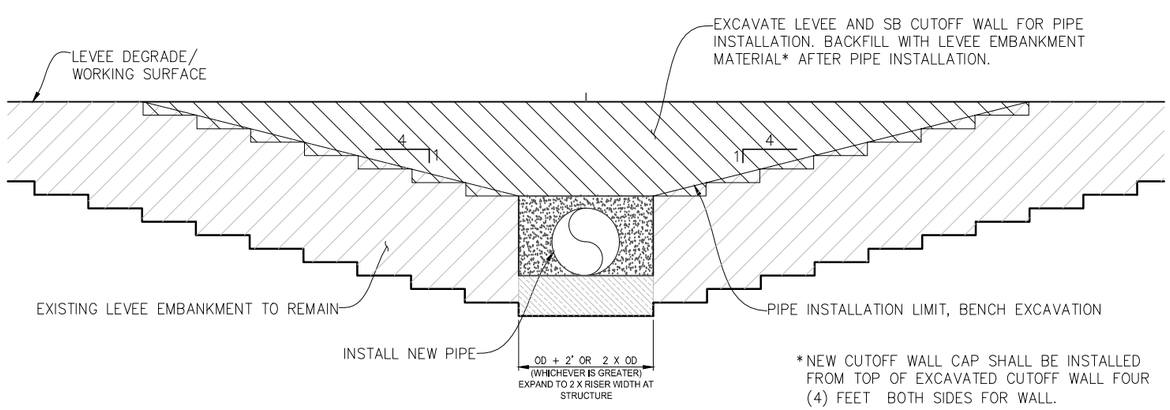

*NEW CUTOFF WALL CAP SHALL BE INSTALLED FROM TOP OF EXCAVATED CUTOFF WALL FOUR (4) FEET BOTH SIDES FOR WALL.

SECTION E/–

SCALE: NONE

SCHEDULE OF THROUGH PIPE REPLACEMENTS ADJACENT TO CANAL			
EXISTING STATION	EXISTING PIPE DIA.	APPROX. DEPTH RISER	NEW PIPE DIA.
1956+20	24 IN	16.9 FT	36 IN

NOT FOR CONSTRUCTION

US Army Corps of Engineers®
Sacramento District

Symbol	Description	Date	Approved
D8	DESCRIPTION8	DATE8	APPROVAL8
D7	DESCRIPTION7	DATE7	APPROVAL7
D6	DESCRIPTION6	DATE6	APPROVAL6
D5	DESCRIPTION5	DATE5	APPROVAL5
D4	DESCRIPTION4	DATE4	APPROVAL4
D3	DESCRIPTION3	DATE3	APPROVAL3
D2	DESCRIPTION2	DATE2	APPROVAL2
D1	DESCRIPTION1	DATE1	APPROVAL1

Designed by: –	Date: –	Rev. –	
Dwn by: –	Spec No.: –	Design file no: –	
Reviewed by: –		Drawing Code: –	
Submitted by: –		File name:	
CHIEF, CIV ENGR DES SEC A		Plot date: $$$$date$$$$	
		Plot scale: –	

DEPARTMENT OF THE ARMY
CORPS OF ENGINEERS
SACRAMENTO, CALIFORNIA

SACRAMENTO DISTRICT
IN-HOUSE DESIGN
1325 "J" STREET
SACRAMENTO, CA 95814-2922

SUTTER & BUTTE COUNTY CALIFORNIA
SUTTER BASIN PILOT FEASIBILITY STUDY
DRAFT REPORT
ALTERNATIVE SB-7 AND SB-8
TYPICAL UTILITY IMPROVEMENT – REMOVAL AND REPLACEMENT OF THROUGH PIPE ADJACENT TO CANAL

Sheet reference number:
C-407

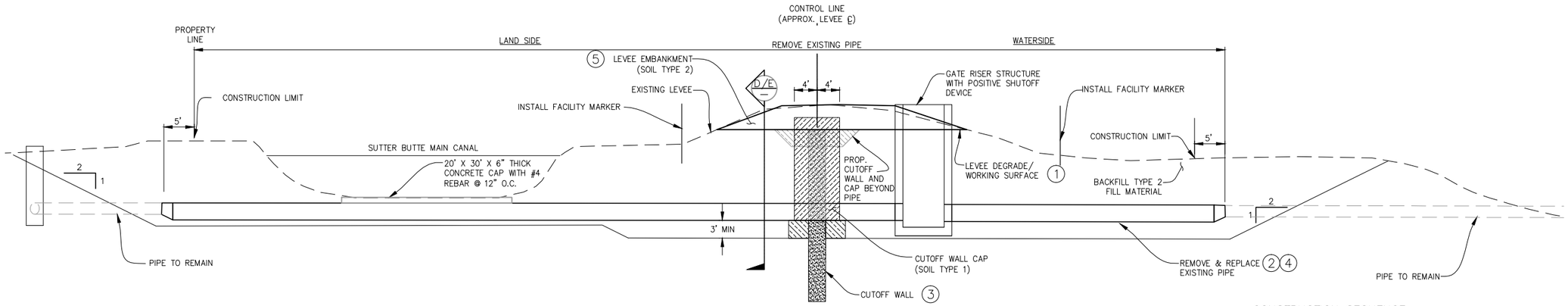

TYPICAL REMOVAL & REPLACEMENT OF THROUGH PIPE UNDER CANAL (TYPE 3C1)

SCALE: NONE

CONSTRUCTION SEQUENCE:

1. DEGRADE EXISTING LEVEE.
2. EXCAVATE, REMOVE AND DISPOSE OF EXISTING PIPE OFFSITE, AND BACKFILL UP TO WORKING SURFACE (SEE SECTION D).
3. CONSTRUCT CUTOFF WALL.
4. EXCAVATE, INSTALL NEW PIPE AND BACKFILL UP TO WORKING SURFACE (SEE SECTION E).
5. RECONSTRUCT LEVEE EMBANKMENT FOR AREA EXCAVATED FOR PIPE AND RISER INSTALLATION.

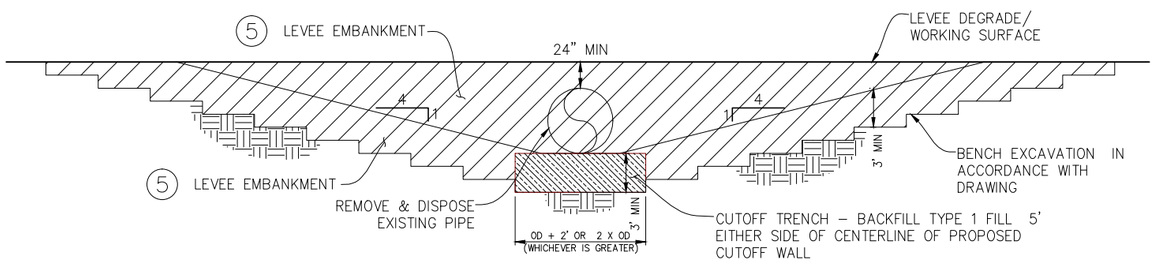

SECTION D

SCALE: NONE

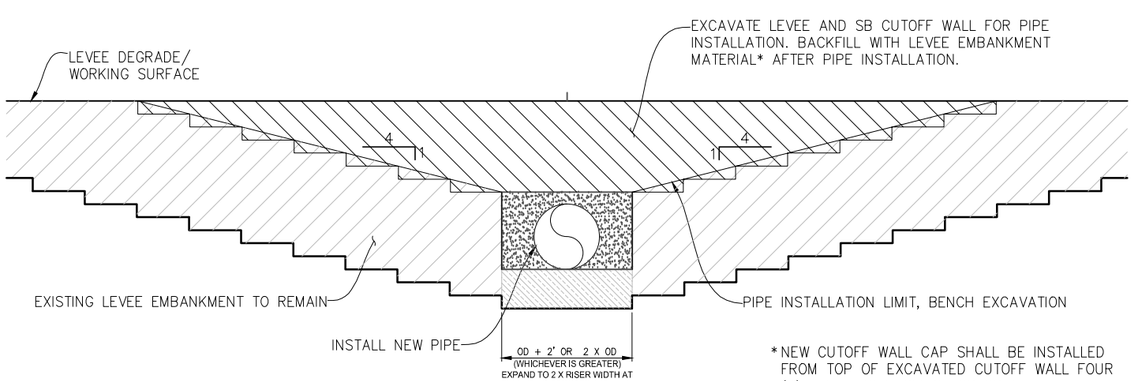

*NEW CUTOFF WALL CAP SHALL BE INSTALLED FROM TOP OF EXCAVATED CUTOFF WALL FOUR (4) FEET BOTH SIDES FOR WALL.

SECTION E

SCALE: NONE

SCHEDULE OF THROUGH PIPE REPLACEMENTS UNDER CANAL			
EXISTING STATION	EXISTING PIPE DIA.	APPROX. DEPTH RISER	NEW PIPE DIA.
1934+54	24 IN	21.6 FT	36 IN

NOT FOR CONSTRUCTION

US Army Corps of Engineers®
Sacramento District

Symbol	Description	Date	Approved
D8	DESCRIPTION8	DATE8	APPROVAL8
D7	DESCRIPTION7	DATE7	APPROVAL7
D6	DESCRIPTION6	DATE6	APPROVAL6
D5	DESCRIPTION5	DATE5	APPROVAL5
D4	DESCRIPTION4	DATE4	APPROVAL4
D3	DESCRIPTION3	DATE3	APPROVAL3
D2	DESCRIPTION2	DATE2	APPROVAL2
D1	DESCRIPTION1	DATE1	APPROVAL1

Designed by: – | Date: – | Rev. –
Dwn by: – | Spec No.: – | Design file no: –
Reviewed by: – | Drawing Code: –
Submitted by: – | File name: $$$$date$$$$
Chief, Cv Engr DES SEC A | Plot scale: – | Plot date:

DEPARTMENT OF THE ARMY
CORPS OF ENGINEERS
SACRAMENTO, CALIFORNIA

SACRAMENTO DISTRICT
IN-HOUSE DESIGN
1325 "J" STREET
SACRAMENTO, CA 95814-2922

SUTTER & BUTTE COUNTY CALIFORNIA
SUTTER BASIN PILOT FEASIBILITY STUDY
DRAFT REPORT
ALTERNATIVE SB-7 AND SB-8
TYPICAL UTILITY IMPROVEMENT – REMOVAL AND REPLACEMENT OF THROUGH PIPE UDNER CANAL

Sheet reference number:
C-408

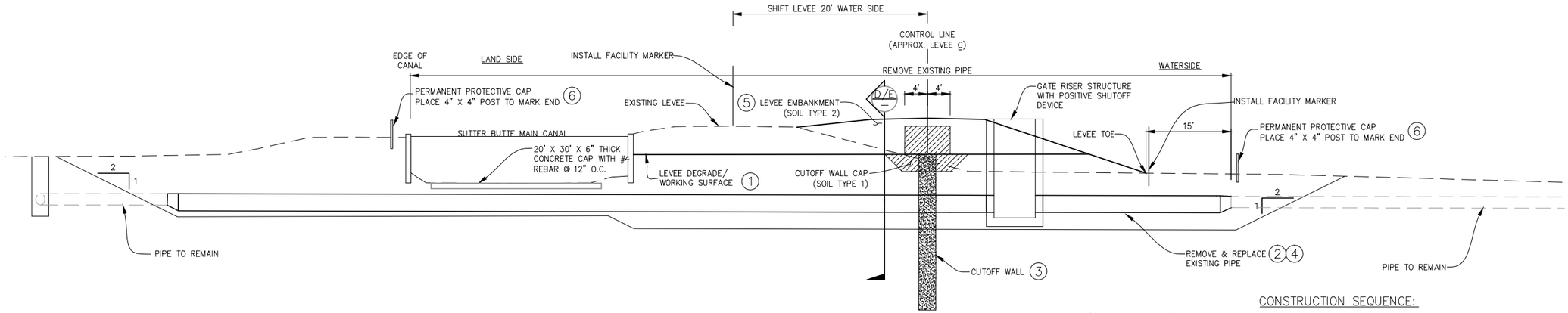

TYPICAL REMOVAL & REPLACEMENT OF THROUGH PIPE UNDER CANAL WITH LEVEE RELOCATION (TYPE 3C2)

SCALE: NONE

CONSTRUCTION SEQUENCE:

1. DEGRADE EXISTING LEVEE.
2. EXCAVATE, REMOVE AND DISPOSE OF EXISTING PIPE OFFSITE, AND BACKFILL UP TO WORKING SURFACE (SEE SECTION D).
3. CONSTRUCT CUTOFF WALL.
4. EXCAVATE, INSTALL NEW PIPE AND BACKFILL UP TO WORKING SURFACE (SEE SECTION E).
5. RECONSTRUCT LEVEE EMBANKMENT FOR AREA EXCAVATED FOR PIPE AN RISER INSTALLATION.
6. EXCAVATE, INSTALL NEW PIPE, CONNECT TO EXISTING PIPE, INSTALL MARKER AND BACKFILL

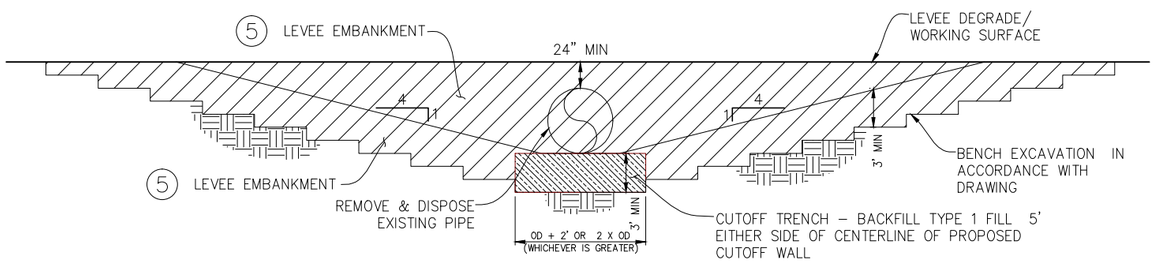

SECTION D/–

SCALE: NONE

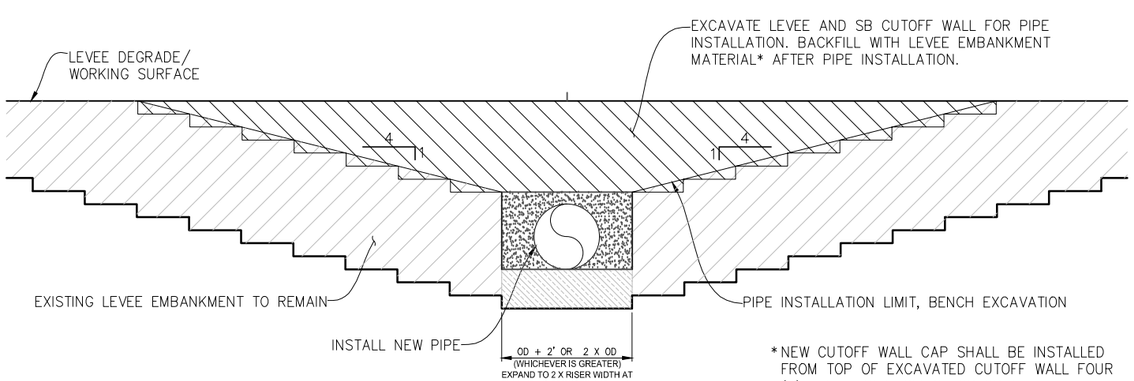

*NEW CUTOFF WALL CAP SHALL BE INSTALLED FROM TOP OF EXCAVATED CUTOFF WALL FOUR (4) FEET BOTH SIDES FOR WALL.

SECTION E/–

SCALE: NONE

SCHEDULE OF THROUGH PIPE REPLACEMENTS UNDER CANAL W/ LEVEE RELOCATION			
EXISTING STATION	EXISTING PIPE DIA.	APPROX. DEPTH RISER	NEW PIPE DIA.
1610+92	18 IN	18.9 FT	36 IN
1675+27	60x72 IN	17.0 FT	60x72 IN
1741+32	16 IN	14.8 FT	18 IN

NOT FOR CONSTRUCTION

US Army Corps of Engineers®
Sacramento District

Symbol	Description	Date	Approved
D8	DESCRIPTION8	DATE8	APPROVAL8
D7	DESCRIPTION7	DATE7	APPROVAL7
D6	DESCRIPTION6	DATE6	APPROVAL6
D5	DESCRIPTION5	DATE5	APPROVAL5
D4	DESCRIPTION4	DATE4	APPROVAL4
D3	DESCRIPTION3	DATE3	APPROVAL3
D2	DESCRIPTION2	DATE2	APPROVAL2
D1	DESCRIPTION1	DATE1	APPROVAL1

Designed by: –
Dwn by: –
Reviewed by: –
Submitted by: –
Chief, Cv Engr DES SEC A
Date: –
Spec No.: –
Drawing Code: –
File name: $$$$cmd$$$$
Plot date: –
Plot scale: –
Rev. –

DEPARTMENT OF THE ARMY
CORPS OF ENGINEERS
SACRAMENTO, CALIFORNIA

SACRAMENTO DISTRICT
IN-HOUSE DESIGN
1325 "J" STREET
SACRAMENTO, CA 95814-2922

SUTTER & BUTTE COUNTY CALIFORNIA
SUTTER BASIN PILOT FEASIBILITY STUDY
DRAFT REPORT
ALTERNATIVE SB-7 AND SB-8
TYPICAL UTILITY IMPROVEMENT – REMOVAL AND REPLACEMENT OF THROUGH PIPE UDNER CANAL W/LEVEE RELOCATION

Sheet reference number:
C-409