APPENDIX F:
RECREATION RESOURCES TECHNICAL APPENDIX

This page intentionally left blank

This Appendix provides a summary of the public access and recreation features associated with the South Bay Salt Pond (SBSP) Restoration Project, Phase 2 actions, and a review of applicable plans and policies of regulatory agencies and project stakeholders, evaluation of trail use demand, and identification of key components and design guidelines for public access and recreation facilities to be completed as part of this project. The project impacts associated with public access and recreation features are presented in Chapter 3.6, Recreation Resources, of the main text.

This Appendix contains information on the following components:

- Regulatory Framework;
- Existing Public Access and Recreation Facilities;
- Recreation Regulatory Permit Requirements;
- Phase 1 Public Access and Recreation Feaatures;
- Phase 2 Public Access and Recreation Alternatives;
- Projected Trail Use; and
- Public Access and Recreation Design Guidelines.

This page intentionally left blank

TABLE OF CONTENTS

1. Alternatives 1-1
2. Physical Setting 2-1
3. Regulatory Setting 3-1
   3.1 Regulatory and Managerial Framework 3-1
   3.2 Existing Public Access and Recreation Facilities 3-11
   3.3 Recreation-Related Review and Permits 3-4
4. Programmatic and Phase 1 Public Access and Recreation Alternatives 4-1
   4.1 Overview 4-1
   4.2 Alviso-Island Ponds 4-1
   4.3 Alviso-Mountain View Ponds 4-2
   4.4 Alviso-A8 Ponds 4-2
   4.5 Ravenswood Ponds 4-2
5. Phase 2 Public Access and Recreation Alternatives 5-1
   5.1 Alviso-Island Ponds 5-1
   5.2 Alviso-Mountain View Ponds 5-1
   5.3 Alviso-A8 Ponds 5-2
   5.4 Ravenswood Ponds 5-2
6. Projected Trail Use 6-1
7. Public Access and Recreation Design Guidelines 7-1
   7.1 Trails 7-1
   7.2 Boardwalks and Viewing Platforms 7-6
   7.3 Signage, Wayfinding and Site Furnishings 7-6
   7.4 Design to Minimize Wildlife Conflicts 7-7
8. References 8-1

Tables

Table H-1 Recreation-Related City/County Plans
Table H-2 SBSP Restoration Project Area Public Access and Recreation Related Plans and Projects
Table H-3 Alviso–Island Ponds Existing Public Access and Recreation
Table H-4 Alviso–A8 Ponds Existing Public Access and Recreation
Table H-5 Alviso–Mountain View Ponds Existing Public Access and Recreation
Table H-6 Ravenswood Ponds Existing Public Access and Recreation
Table H-7 Recreation-Related Regulations and Permit Summary
Table H-8 Bay Trail Design Guidelines

Figures

Figure H-1. Public Access and Recreation in the Vicinity of the Phase 2 Area
Figure H-2. Typical Levee Trail Section
Figure H-3 Typical Boardwalk/Viewing Platform Section
Figure H-4. Facilities at Cullinan Ranch, San Pablo Bay National Wildlife Refuge
Figure H-5. Typical South Bay Salt Pond Restoration Project, Phase 1, Viewing Platform Furnishings (Ravenswood Pond SF2)
Figure H-6. Typical South Bay Salt Pond Restoration Project Phase 1 Bench

1. ALTERNATIVES

A primary goal of the South Bay Salt Pond (SBSP) Restoration Project is to provide public access and recreation. The vision of the project is to help establish an interrelated trail system, provide wildlife viewing and interpretative opportunities, create small watercraft launch points, and allow for waterfowl hunting.

Phase 1 actions included identification and design of trails and other public improvements at locations within each pond complex. This included 2.9 miles of new trails that were completed within the Phase 1 area. Additional trail, recreation and interpretive facilities are in the construction phase and are scheduled to open in 2015.

Public access and recreation features to be evaluated as part of Phase 2 Project Alternatives, as well as information regarding uses in the surrounding vicinity were collected through several methods, including: stakeholder meetings; Geographic Information Systems (GIS) data compiled for this project; personal communications; site tours; research and review of existing plans, policies, regulations, codes, and reports; and baseline information contained in the SBSP Restoration Project Initial Stewardship Plan (ISP) and the SBSP Restoration Project Public Access and Recreation Phase I Existing Conditions Report, which is incorporated by reference.

This page intentionally left blank

2. PHYSICAL SETTING

The Phase 2 project area includes proposed actions at four locations referred to as "pond clusters." Three of these ponds clusters are located in the Alviso pond complex, and the fourth is in the Ravenswood pond complex. They are illustrated in the figures in Chapter 2, Alternatives. The ponds in each named cluster are as follows:

- Alviso-Island Ponds A19, A20, and A21;
- Alviso-A8 Ponds A8 and A8S;
- Alviso-Mountain View Ponds A1, A2W, and Charleston Slough; and
- Ravenswood Ponds R3, R4, R5, and S5.

With the exception of Charleston Slough, which is owned by the City of Mountain View, all of these areas are owned and managed by the U.S. Fish and Wildlife Service (USFWS) as part of the Don Edwards San Francisco Bay National Wildlife Refuge (Refuge).

This page intentionally left blank

3. REGULATORY SETTING

A detailed discussion of the regulatory framework for the SBSP Restoration Project area was provided in the project's Public Access and Recreation Existing Conditions Report. A summary of relevant regulations related to public access and recreation are provided herein. The portions of the SBSP Restoration Project Phase 2 that are covered in the Draft Environmental Impact Statement/Environmental Impact Report (Draft EIS/R) are primarily governed by the applicable codes, regulations, and policies of USFWS, with additional regulation by the San Francisco Bay Conservation and Development Commission (BCDC). Together, these entities compose the legal and managerial framework with which to plan and manage existing and proposed public access and recreation for the SBSP Restoration Project Phase 2. These agencies own, manage, or have jurisdiction over parts of the SBSP Restoration Project Phase 2 area. Additionally, the policies of county and city general plans, regulatory agencies such as the California Department of Fish and Wildlife (CDFW), and region-wide, recreation-related plans such as the Association of Bay Area Governments (ABAG)-led Bay Trail effort also influence the development of future public access and recreation facilities on SBSP Restoration Project, Phase 2 area lands; they are summarized herein.

3.1 Regulatory and Managerial Framework

USFWS is the primary land-owning and managing agency in the SBSP Restoration Project, Phase 2 area.

BCDC has jurisdiction over the SBSP Restoration Project, Phase 2 area relative to public access and recreation. The jurisdiction of these agencies composes the legal and managerial framework with which to plan and manage existing and proposed public access and recreation for the SBSP Restoration Project area.

The cities of Mountain View, Palo Alto, and Menlo Park own adjacent recreation facilities that connect directly to trails and recreation facilities that would be constructed as part of the project. In addition, there are several trail studies and master plans for the area in and around Phase 2 of the SBSP Restoration Project that contain policies and recommendations for public access and recreation facilities.

3.1.1 United States Fish and Wildlife Service

As noted above, the Alviso and Ravenswood pond complexes are owned and managed by USFWS as part of the Don Edwards San Francisco Bay National Wildlife Refuge (Refuge). These pond complexes are governed by laws, executive orders, and directives that guide public use and recreation on such refuges. These cover a range of topics, including the administration, management, planning of refuges, special areas, and policies governing regulations affecting public use (e.g., fees, concessions, visitor protection, waterfowl hunting, fishing, trails, trapping, off-road vehicles, and motor boats). Below is a summary of the key laws that govern public access and recreation uses within the National Wildlife Refuge System (NWRS). Other applicable laws that USFWS must follow on their lands are outlined in the project's Public Access and Recreation Existing Conditions Report.

The National Wildlife Refuge System Administration Act of 1966 (16 United State Code [USC] 668dd–668ee, as amended) (Administration Act) states that the USFWS focuses the mission of the NWRS on conservation of fish, wildlife, and plant resources and their habitats. The Administration Act closes national wildlife refuges to all uses until a compatibility determination has been made. The Secretary of the Interior (Secretary) may open refuge areas to any use, including waterfowl hunting and/or fishing,

upon a determination that such uses are compatible with the purposes of the refuge and the NWRS mission. The action also must be in accordance with provisions of all laws applicable to the areas, developed in coordination with the appropriate state fish and wildlife agencies, and consistent with the principles of sound aquatic and wildlife management and administration. These requirements ensure that USFWS maintains the biological integrity, diversity, and environmental health of the NWRS for the benefit of present and future generations of Americans.

The Administration Act and Refuge Recreation Act (Recreation Act) of 1962 (16 USC 460k–460k-4) governs the administration and public use of the NWRS. The Recreation Act authorizes the Secretary to administer areas within the NWRS for public recreation as an appropriate incidental or secondary use only to the extent that doing so is practicable and not inconsistent with the primary purpose(s) for which Congress and USFWS established the areas. The Recreation Act also authorizes the Secretary to issue regulations to carry out the purposes of the Acts and regulate uses.

Amendments enacted by the National Wildlife Refuge System Improvement Act (Improvement Act) of 1997 (PL 105-57) build upon the Administration Act in a manner that provides an “Organic Act” for the NWRS similar to those that exist for other public federal lands. The Improvement Act serves to ensure that USFWS effectively manages the NWRS as a national network of lands, waters, and interests for the protection and conservation of the Nation's wildlife resources. As described above, the Administration Act states that the mission of the NWRS is to conserve fish, wildlife, and plant resources and their habitats. The Improvement Act requires that, before allowing a new use of a refuge or before expanding, renewing, or extending an existing use of a refuge, the Secretary must determine that the use is compatible. The Improvement Act established as the policy of the United States that wildlife-dependent recreation, when compatible, is a legitimate and appropriate public use of the NWRS through which the American public can develop an appreciation for fish and wildlife. The Improvement Act established six wildlife-dependent recreational uses, when compatible, as the priority general public uses of the NWRS. These uses, sometimes referred to as “Priority Uses,” are hunting, fishing, wildlife observation, photography, environmental education, and interpretation.

The San Francisco Bay National Wildlife Refuge Complex includes several different refuges, of which the Don Edwards San Francisco Bay National Wildlife Refuge is one. This Refuge has recently developed and implemented a Comprehensive Conservation Plan (USFWS 2012) to guide management activities on all parts of the Refuge that are not part of the full SBSP Restoration Project. The lands within the SBSP Restoration Project, Phase 2 area were covered by the Adaptive Management Plan and the 2007 South Bay Salt Pond Restoration Project Programmatic EIS/R(2007 EIS/R), so those areas were explicitly excluded from the Comprehensive Conservation Plan.

Some ponds within the Phase 2 area allow hunting by special permit. Regulations vary by pond and are discussed in **Section 3.2**. According to the Refuge Manager, ponds may be open or closed to hunting based on an evaluation of conditions to determine if habitat improvements have occurred or if there are impacts to sensitive species (Eric Mruz, personal communication).

3.1.2 Federal Laws and Regulations

Accessibility

Access to project facilities by people of all abilities is subject to regulations and standards set forth by the United States Access Board. The Access Board is an independent federal agency that promotes equality

for people with disabilities, and develops and maintains design criteria for the built environment. The Board provides technical assistance and training on these requirements and on accessible design and continues to enforce accessibility standards that cover federally funded facilities. There are two sets of standards that may apply to project improvements: the Architectural Barriers Act (ABA), which applies to facilities on federal lands, and the Americans with Disabilities Act (ADA), which will apply to any connecting facilities or when required by local partner jurisdictions as part of project implementation.

Architectural Barriers Act

Standards issued under the Architectural Barriers Act (ABA) apply to facilities designed, built, altered, or leased with certain federal funds. Passed in 1968, the ABA is one of the first laws to address access to the built environment. The law applies to USFWS lands, as well as projects built or altered with federal grants or loans.

To address the need for accessibility standards for outdoor areas, the Access Board developed the Architectural Barriers Act Accessibility Guidelines; Outdoor Developed Areas, which became effective November 25, 2013[1]. These guidelines have been incorporated into Chapter 10 of the ABA Standards, and include design standards for facilities such as piers and platforms; outdoor constructed features such as picnic tables, benches and viewing scopes; viewing areas; outdoor recreation access routes; and trails. The standards also outline the conditions for exceptions to accessibility compliance.

Americans with Disabilities Act

The United States Congress enacted the Americans with Disabilities Act (ADA) in 1990 to address discrimination against individuals with physical and mental disabilities. The ADA requires that all facilities and buildings open to the public be accessible to those with disabilities.

The ADA does not directly pertain to federally owned lands; the federal government is required to comply with the Architectural Barriers Act (ABA) (see above), but most of the SBSP Restoration Project is a collaboratively funded and managed effort with participation by the State of California and by a number of county and city agencies and special districts. Thus, generally, the SBSP Restoration Project will also meet ADA standards and comply with ADA requirements.

Title 24, California Building Code

The State of California has also adopted a set of design guidelines for accessible facilities, incorporating ADA guidelines. These requirements are contained in the California Code of Regulations, Title 24, Part II, California Building Code (CBC)[2]. CBC contains general building design and construction requirements relating to fire and life safety, structural safety, and access compliance. As noted above, project facilities located on non-federal lands or subject to local approval are subject to ADA and state accessibility Title 24 regulations.

[1] Architectural and Transportation Barriers Compliance Board, September 26, 2013, Architectural Barriers Act Accessibility Guidelines; Outdoor Developed Areas, Final Rule, 36 CFR Part 1191 RIN 3014-AA22.
[2] California Code of Regulations, Title 24 Part 2, November 1, 2013.

3.1.3 Regional Regulatory Framework

San Francisco Bay Conservation and Development Commission

Phase 2 of the SBSP Restoration Project falls within the jurisdiction of the BCDC. The McAteer-Petris Act (California Government Code 66600 – 66682) is the key legal provision under California state law that preserves San Francisco Bay from indiscriminate filling. The BCDC, which is charged by the State to prepare a plan (San Francisco Bay Plan) for the long-term use of the Bay, reviews applications for projects that fall within BCDC jurisdictions for their ability to provide "maximum feasible public access."

Under the McAteer-Petris Act, the BCDC requires locations for water-oriented land uses and increased public access to shoreline and waters, and encourages the provision of maximum feasible public access to the Bay and its shoreline as long as such access is compatible with wildlife protection. Similarly, the San Francisco Bay Plan contains policies that encourage the development of waterfront recreation facilities and linkages between existing shoreline parks, and requires the provision of these opportunities in relationship to sensitive biological species, habitats, and future restoration of salt ponds.

The BCDC amended the salt pond section of the San Francisco Bay Plan on August 18, 2005. The amendment focuses on the significance of salt ponds to Bay wildlife, on the opportunity for salt ponds to be restored to tidal action, and on the need to maximize public access and recreational opportunities while avoiding significant adverse effects on wildlife. Policy 5 of the amendment addresses the need for comprehensive planning of any development proposal in a salt pond that (1) integrates regional and local habitat restoration and management objectives and plans and (2) provides opportunities for collaboration among different stakeholders (e.g., agencies, landowners, other private interests, and the public). Relevant to recreation resources is the need to incorporate provisions for public access and recreational opportunities appropriate to the land's use, size, and existing future habitat values in the planning process.

The San Francisco Bay Plan identifies the Shoreline Spaces: Public Access Design Guidelines for San Francisco Bay (handbook) as a guide to siting and designing public access. The handbook, published by the BCDC, functions as a design resource for development projects along San Francisco Bay's shoreline, and includes recommendations for site planning, designing, and developing attractive and usable public access areas. The handbook also covers in-lieu public access and management issues associated with maintenance of public access areas. The handbook discusses general planning principles, and specifies that "the design of public access areas should create a sense of place based on the site's unique shoreline characteristics, the aesthetic quality of the proposed development, and the intensity and nature of the proposed use" (BCDC 2005). The handbook identifies the following seven public access objectives and provides recommendations on how these objectives could be accomplished:

- Make public access public.
- Make public access usable.
- Provide, maintain, and enhance visual access to the Bay and shoreline.
- Maintain and enhance the visual quality of the Bay, shoreline and adjacent developments.
- Provide connections to and continuity along the shoreline.
- Take advantage of the Bay setting.

- Ensure that public access is compatible with wildlife through siting, design, and management strategies.

The handbook also identifies 18 public access improvements that could be implemented with any given project. These improvements must be implemented in a manner consistent with the San Francisco Bay Plan's public access policies, and some are required as part of the BCDC's permit decisions. Included in these improvements are stormwater management systems, roads and highways along the shoreline, designated public access parking and staging areas, in-car Bay viewing, pedestrian and bicycle bridges, gathering and seating areas, site furnishings, signage/comprehensive sign programs, methods to avoid adverse effects on wildlife, shoreline erosion control, shoreline edge treatments that provide a closeness to the water, trail design, public access across launch ramps, shoreline planting, pedestrian and vehicular railings, fishing facilities, point access at ports and water-related industrial areas, and interpretative elements and public art. Although these are not legally enforceable standards, they are advisory and aimed at enhancing shoreline access.

San Francisco Bay Trail (Bay Trail)

The Bay Trail is a planned recreational corridor that, when complete, will encircle San Francisco Bay and San Pablo Bay with a continuous network of bicycling and hiking trails. It will connect the shoreline of all nine Bay Area counties, link 47 cities, and cross the major toll bridges in the region. To date, approximately 310 miles of the alignment – over 60 percent of the Bay Trail's ultimate length – have been completed.

Senate Bill 100, authored by then-state Senator Bill Lockyer and passed into law in 1987, directed the ABAG to develop a plan for this "ring around the Bay," including a specific alignment for the Bay Trail. The Bay Trail Plan, adopted by ABAG in July 1989, includes a proposed alignment; a set of policies to guide the future selection, design and implementation of routes; and strategies for implementation and financing.

Bay Trail segments within or adjacent to the Project include segments within Bedwell Bayfront Park and along Hwy 84 (maintained by City of Menlo Park), Palo Alto Baylands Nature Preserve (City of Palo Alto), and Mountain View Shoreline Park (City of Mountain View).

Depending upon the alternative, some of these Bay Trail facilities would be temporarily closed and/or rebuilt as part of Phase 2 actions.

Many of the public access facilities constructed as part of Phase 2 could connect to these existing Bay Trail segments. New trail segments being considered as part of Phase 2 actions are not currently shown as planned segments of the Bay Trail, but could be considered as part of the Bay Trail network in the future.

San Francisco Bay Area Water Trail (Water Trail)

The Water Trail was authorized by the San Francisco Bay Area Water Trail Act, which was signed into law in September 2005. The Act directed the San Francisco Bay Conservation and Development Commission, in coordination with other agencies and organizations, to conduct a public process to develop the San Francisco Bay Area Water Trail Plan, and assigned the California State Coastal Conservancy to be the lead agency for implementing the plan. The Water Trail is a network of access sites (or "trailheads") that enables people using non-motorized small boats or other beachable sailcraft, such as kayaks, canoes, dragon boats, and stand-up paddle and windsurf boards, to safely enjoy single and

multiple-day trips around San Francisco Bay. This regional trail has the potential to enhance Bay Area communities' connections to the Bay and to create new linkages to existing shoreline open space and other regional trails, such as the Bay Trail. The Water Trail is to include educational, stewardship, and outreach components. Facilities in Palo Alto Baylands Park and Nature Preserve and at Alviso Marina County Park are designated as existing Water Trail Sites; they have launch facilities or planned facilities (e.g., ramp, float, etc.) that are used for non-motorized small boat access or are planned for this use; and are open to the public.

3.1.4 3.1.4 Local Regulatory Framework

In addition to the legal and managerial framework discussed above, policies of regional and local planning jurisdictions may apply to the development of public access and recreation facilities within the SBSP Restoration Project, Phase 2 area, including General Plans as well as bicycle and pedestrian plans for each jurisdiction. Relevant goals, policies, implementation, and action statements of these agencies are described below in **Table F-1.**

The SBSP Restoration Project, Phase 2 area falls within multiple counties (Alameda, San Mateo, and Santa Clara) and cities (Fremont, Menlo Park, Mountain View, Palo Alto, and San Jose). These entities have identified goals and policies that guide development within their jurisdictions. Public access and recreational development in the SBSP Restoration Project, Phase 2 area would need to coordinate with the goals and policies prescribed in the county and city plans. Table F 1 also identifies General Plan goals and policies that may apply to SBSP Restoration Project, Phase 2 lands, based on their location within the jurisdictions.

Table F-1 Recreation-Related City/County Plans

POND COMPLEX	CITY PLANS/POLICIES	COUNTY PLANS/POLICIES
Alviso Island Ponds **A19, A20, A21** **City of Fremont, Alameda County**	City of Fremont General Plan (GP) Parks and Recreation Element, which identifies Bay Trail segments north and east of the Phase 2 area adjacent to Ponds A22 and A23, as well as Goal 8-3 Interagency Collaboration and Implementation 8-3.1.C both encourage the Don Edwards San Francisco Bay National Wildlife Refuge, to maintain and enhance recreational offerings to the community.	Alameda County GP Open Space Element contains objectives, general open space principles, and principles for shoreline and San Francisco Bay (Bay) open space. The Recreation Element calls for protection of shoreline areas with a linear band of wildlife and open space preservation areas along the Bay shoreline.
	City of Fremont Bicycle Master Plan (2012) and Fremont Pedestrian Plan (2007) include policies and programs for bicycling and walking. Multi-use trail segments are shown north and east of the Phase 2 area.	Alameda County Transportation Commission Countywide Bicycle Plan and Countywide Pedestrian Plan contain polices and recommendations for implementation of a connected trail network for bicycling and walking. These Plans identify multi=use trails north and east of the Phase 2 area.
Alviso-Mountain View Ponds **A1, A2W, Charleston Slough** **City of Mountain View, Santa**	City of Mountain View 2030 GP, Goal/Policy POS-3 to protect and preserve shoreline areas for low-intensity uses; Goal/Policy POS-9 to use sustainable design and provide accessible facilities; Goals/Policies MOB-3 and MOB-4 to encourage walkability, bikeability, and a connected pedestrian and bicycle network.	Santa Clara County GP Parks and Recreation Chapter Strategies to balance environmental and recreational opportunities, complete a string of recreation and open space facilities along the Bay, and preserve visually and environmentally significant open space resources.

POND COMPLEX	CITY PLANS/POLICIES	COUNTY PLANS/POLICIES
Clara County, Portion of Charleston Slough levee is in City of Palo Alto, with easements owned by Santa Clara Valley Water District (SCVWD)	City of Mountain View Pedestrian Master Plan and City of Mountain View Bicycle Transportation Plan Update illustrate the existing trails network at Shoreline Mountain View Park.	Santa Clara County Countywide Trails Master Plan Update. Trails in the Phase 2 area are identified as the San Francisco Bay Trail and the Bay Recreation Retracement Route.
	City of Mountain View North Bayshore Precise Plan includes a network of trails and transportation improvements to connect to the existing trail system within Shoreline Mountain View Park.	Valley Transportation Authority Countywide Bicycle Plan shows the Bay Trail Cross County Bicycle Corridor in the vicinity of the Phase 2 area.
	City of Palo Alto Transportation Implementation Plan Policies to complete the Bay Trail in Palo Alto and to provide and maintain opportunities for bicycling and walking in the city; Natural Environment Element Policy N1and related programs to manage open space areas in a manner that meets habitat protection goals, public safety concerns, and low-impact recreation needs.	SCVWD is the primary water resource management agency for Santa Clara County, including treated water, flood protection, environmental stewardship, and open space and trails. The 2010 Draft Flood Protection and Stream Stewardship Master Plan includes programs to work with the cities and county to implement 70 miles of new trails by 2016 to meet community expectations in the Clean, Safe Creeks program.
Alviso A8 Ponds City of San Jose, Santa Clara County	Envision San Jose 2040 General Plan, Environmental Leadership Goals and Policies ER-3, Bay and Baylands; Quality of Life, Parks, Open Space and Recreation PR1, PR3, PR6, PR7; Land Use and Transportation TR2 Goals and Policies promoting walking and bicycling	Santa Clara County GP Parks and Recreation Chapter Strategies to balance environmental and recreational opportunities, complete a string of recreation and open space facilities along the Bay, and preserve visually and environmentally significant open space resources.
		Santa Clara County - Countywide Trails Master Plan Update. Trails in the project area are identified as San Francisco Bay Trail, and Bay Recreation Retracement Route.
		Valley Transportation Authority Countywide Bicycle Plan shows the Bay Trail Cross County Bicycle Corridor in the vicinity of the Phase 2 area.
Ravenswood Ponds R3, R4, R5, S5 City of Menlo Park, San Mateo County	City of Menlo Park General Plan, Open Space, Conservation, Noise, and Safety Element Goal OSC1 and related policies to maintain, protect, and enhance open space and natural resources; OSC1.6 SBSP Restoration Project and flood management project to continue to support and participate in federal and state efforts related to the SBSP Restoration Project and Flood Management Project. Provide public access to the Bay for scenic enjoyment and recreation opportunities as well as conservation education opportunities related to the open Bay, the sloughs, and the marshes; Goal OSC 2 and related policies and programs to provide open space and pedestrian and bicycle paths, including the Bay Trail.	San Mateo County GP (vegetative, water, fish, and wildlife resources policies 1.33; Park and Recreation Resources policies 6.3, 6.4, 6.14, 6.37, and 6.38; and General Open Space policies 9.40, 9.41, and 9.42).
		The San Mateo County Comprehensive Bicycle and Pedestrian Plan includes the system of trails along Bayshore Expressway, Facebook and Bedwell Bayfront Park. This plan also identifies a proposed Bay Trail extension west of the Phase 2 area to connect with Redwood City.
	The Menlo Park Comprehensive Bicycle Development Plan sets forth the recommended bikeway and trail system within the City. Bikeways and trails within or near the Phase 2 area include the Facebook trail loop, the Bay Trail along Bayfront Expressway, and the network of trails within Bedwell Bayfront Park.	

3.1.5 Other Recreation-Related Plans and Policies

Other plans that guide or influence development of public access and recreation facilities for the SBSP Restoration Project area are summarized below.

The CDFW and USFWS published the South Bay Salt Pond Restoration Project Interim Stewardship Plan in June 2003[3]. The ISP described the interim operation and maintenance of the former Cargill ponds prior to the development of the long-term plan. A Draft Environmental Impact Statement / Environmental Impact Report (EIS/R)[4], published in December 2003, was conducted to evaluate the environmental impacts that could occur with implementation of the ISP. The Final EIR/EIS was published in December 2007.

The ISP summarizes relevant regional plans that support open space, recreation, and public access uses. It does not provide policies or regulations associated with management of recreation or open space; rather, it references those documents that provide guidance on wetland restoration and address public access and recreation. The ISP indicates that many of the land use and open space elements for the county and cities are outdated, and land use planning documents and programs often supersede the documents and programs of local jurisdictions with respect to planning, protection, and restoration of lands within the Estuary. The BCDC's San Francisco Bay Plan[5], the San Francisco Estuary Project's (SFEP) Comprehensive Conservation Management Plan (CCMP)[6], the Baylands Ecosystem Habitat Goals Report[7], the San Francisco Bay Joint Venture (SFBJV) Implementation Strategy[8], and the Bay Trail Plan[9] were reviewed in the ISP for their wetland restoration goals and objectives, some of which include support for recreational opportunities.

These Plans, as well as others that provide guidance on development of public access and recreation components in or near the SBSP Restoration Project, Phase 2 area are summarized in **Table F-2** and should be considered during implementation of public access and recreation features to ensure consistency and coordination between projects.

[3] Life Science!, June 2003, *South Bay Salt Ponds Initial Stewardship Plan*.
[4] EDAW, Et. al., December 2007, *South Bay Salt Pond FEIS/R*.
[5] San Francisco Bay Conservation and Development Commission, 1968, amended September 2006, *San Francisco Bay Plan.*
[6] San Francisco Estuary Project, 2007, *Comprehensive Conservation Management Plan*, from http://www.sfestuary.org/about-us/strategic-plan/.
[7] Monroe, M. et al, SFEI, 1997, *Baylands Ecosystem Habitat Goals Report*.
[8] San Francisco Bay Joint Venture (SFBJV), 2001, *Implementation Strategy*, from http://www.sfbayjv.org/about-strategy.php.
[9] Association of Bay Area Governments, 1999, *Bay Trail Plan*, from http://www.baytrail.org/baytrailplan.html#plansummary.

Table F-2 SBSP Restoration Project Area Public Access and Recreation Related Plans and Projects

RELATED PLANS	AGENCY IN CHARGE	PLAN ESSENCE AND RELEVANCE TO RECREATION
Baylands Ecosystem Habitat Goals Report (1999)	San Francisco Bay Area Wetlands Ecosystem Goals Project	The Report is a guide for restoring and improving the Baylands and adjacent habitats of the San Francisco Estuary. It recommends the types, extent, and distribution of habitats needed to sustain healthy wetlands ecosystems in the South Bay and the assessment of opportunities and constraints for public access during the design phase of all restoration activities.
SFBJV Implementation Strategy (2001)	SFBJV	The Strategy builds on the science-based recommendations of the Goals Project and establishes specific acreage goals for wetlands restoration, including bay habitats, seasonal wetlands, and creeks and lakes. The Implementation Strategy recognizes the contribution of recreation activities at wetlands.
Public Access and Wildlife Compatibility Staff Report	BCDC	A study to review the effects of wildlife from public access and recreation with strategies for minimizing adverse impacts through siting, design and management of public access features.
The Bay Trail Plan	Association of Bay Area Governments (ABAG)	The Plan proposes to develop 500 miles of regional hiking and bicycling trails around San Francisco Bay and San Pablo Bay that connect more than 90 parks and publicly accessible open spaces and future water trails. (Portions of the proposed Bay Trail shown near the Phase 2 area are conceptual alignments only and will require further environmental analysis prior to final design.)
Master Plan 1997	East Bay Regional Park District (EBRPD)	The intent of the Master Plan is to define the vision, mission, and priorities for EBRPD for the subsequent 10 years. It provides policies and guidelines in order to achieve the highest standards of service in resource conservation, management, interpretation, public access, and education.
Wildlife and Public Access Study Preliminary Findings	Bay Trail Project	Scientific investigation of the potential effects of nonmotorized, recreational trails on shorebirds and waterfowl that use mudflat foraging habitat adjacent to San Francisco Bay.
2010 Draft Flood Protection and Stream Stewardship Master	Santa Clara Valley Water District	The objective of the Master Plan is to guide the strategic investment of public funds in Santa Clara County over the next 25 years for strategic long-term planning to achieve the district's goals and objectives. Master Plan objectives include natural flood protection; reduced potential for flood damages; healthy creek and bay ecosystems; clean, safe water in creeks and bays; and trails, open space, and water resources management The Master Plan identifies programs to work with cities and the county to implement 70 miles of new trails by 2016 to meet community expectations in the Clean, Safe Creeks program.
Newark-Fremont Bay Trail Realignment Feasibility Study 2013	City of Fremont and City of Newark	The feasibility study identifies a shoreline-oriented trail along the 15 miles of Bay edge in the Newark and Fremont study area that would be incorporated into the Bay Trail system. For much of Newark and Fremont, the current Bay Trail alignment is planned either along city streets or along the active Union Pacific Railroad Corridor. In an effort to provide better access to the shoreline and in keeping with Bay Trail goals, this study examines the best solutions for a shoreline-

Table F-2 SBSP Restoration Project Area Public Access and Recreation Related Plans and Projects

RELATED PLANS	AGENCY IN CHARGE	PLAN ESSENCE AND RELEVANCE TO RECREATION
		oriented bicycle and pedestrian trail network. The study area encompasses trails at the Don Edwards National Wildlife Refuge Headquarters in the vicinity of SR 84 and continues south to the existing Bay Trail in the vicinity of Coyote Creek at Dixon Landing Road.
Strategic Plan for Santa Clara County Parks and Recreation System (2004)	SCCPRD	The plan is a blueprint for the county's park system, which encompasses 45,000 acres within 27 park units. It assesses existing outdoor recreation needs and opportunities and provides goals and action plans.
Santa Clara County Trails Master Plan Update (1995)	Santa Clara County Parks and Recreation Department	The plan is an element of the *Santa Clara County General Plan*. It directs the County's trail implementation efforts through provision of objectives, policies, and guidelines on trail design, use, and management. The update proposes approximately 535 miles of off-street countywide trail routes and 120 miles of on-street bicycle-only routes.
Santa Clara County Uniform Interjurisdictional Trail Design, Use, and Management Guidelines (1999)	Santa Clara County Parks and Recreation Department	The guidelines address interjurisdictional coordination between the County, its 15 cities, and the other special districts and agencies that provide trails within the county.
Prospectus for the San Francisco Bay Area Water Trail (2003)	Bay Access, Inc.(non-profit organization)	The prospectus proposes a Bay Area water trail for human-powered and beachable watercraft. It identifies 86 existing launching/landing sites, including sites around the SBSP Restoration Project, Phase 2rea.
Bay Trail Master Plan for the City of San Jose (2002)	City of San Jose	The Master Plan proposes a 13.3-mile trail alignment of the Bay Trail through San Jose. The section, which is the largest uncompleted trail segment in Santa Clara County, is a critical link between the San Francisco Peninsula and the East Bay.
Menlo Park Bay Trail Feasibility Study (2005)	City of Menlo Park	The study explores the possibility of extending the Bay Trail for the City of Menlo Park. The proposed 0.5-mile future trail would utilize the east and south levees of Pond SF2.
Valley Transportation Plan 2020 (2000)	Santa Clara Valley Transportation Authority	The plan describes the investment programs, partnerships, expenditure plans, and program implementation of transportation facilities and services of the County over the next 20 years. These programs include the Bicycle and Pedestrian Programs.
2001 Transportation Plan for the Bay Area (2001)	Metropolitan Transportation Commission	The plan identifies specific investments and strategies to maintain, manage, and improve the surface transportation network in the nine-county San Francisco Bay Area through the year 2025.
Stevens Creek Trail Connected Vision (2014 est.)	City of Sunnyvale	In-progress plan to identify potential routes to close gaps in the Stevens Creek Trail in Cupertino, Mountain View, Los Altos, and Sunnyvale. The study will assist the four cities in determining feasible alternatives and selecting and coordinating a preferred alternative for completion of a multi-use trail in the Stevens Creek corridor
Regional Open Space Study (1998)	Midpeninsula Regional Open Space District	The study is a planning tool for implementing the district's mission; it identifies existing and desired public access opportunities.
Alviso Slough proposed	City of San Jose	The City of San Jose plans to construct a pedestrian bridge across Alviso Slough just west of Gold Street. It would be for

Table F-2 SBSP Restoration Project Area Public Access and Recreation Related Plans and Projects

RELATED PLANS	AGENCY IN CHARGE	PLAN ESSENCE AND RELEVANCE TO RECREATION
pedestrian bridge		recreational use and would connect two trails that currently exist north and south of the slough.
Ecosystem Restoration Program Plan Strategic Plan for Ecosystem Restoration (2000)	California Bay-Delta Authority	The principal program component of the California Federal Bay-Delta Program for restoring the ecological health of the Bay-Delta ecosystem. The plan identified recreation as part of its goals.
Note: Please refer to the *South Bay Salt Pond Restoration Project Public Access and Recreation Existing Conditions Report* for details on these plans		

3.2 Existing Public Access and Recreation Facilities

The existing public access and recreation facilities in and near the Phase 2 pond clusters are shown on **Figure F-1**. A more focused and spatially relevant list of the facilities, activities, and restrictions near each of the pond clusters is presented and described in **Tables F-3** through **F-6**.

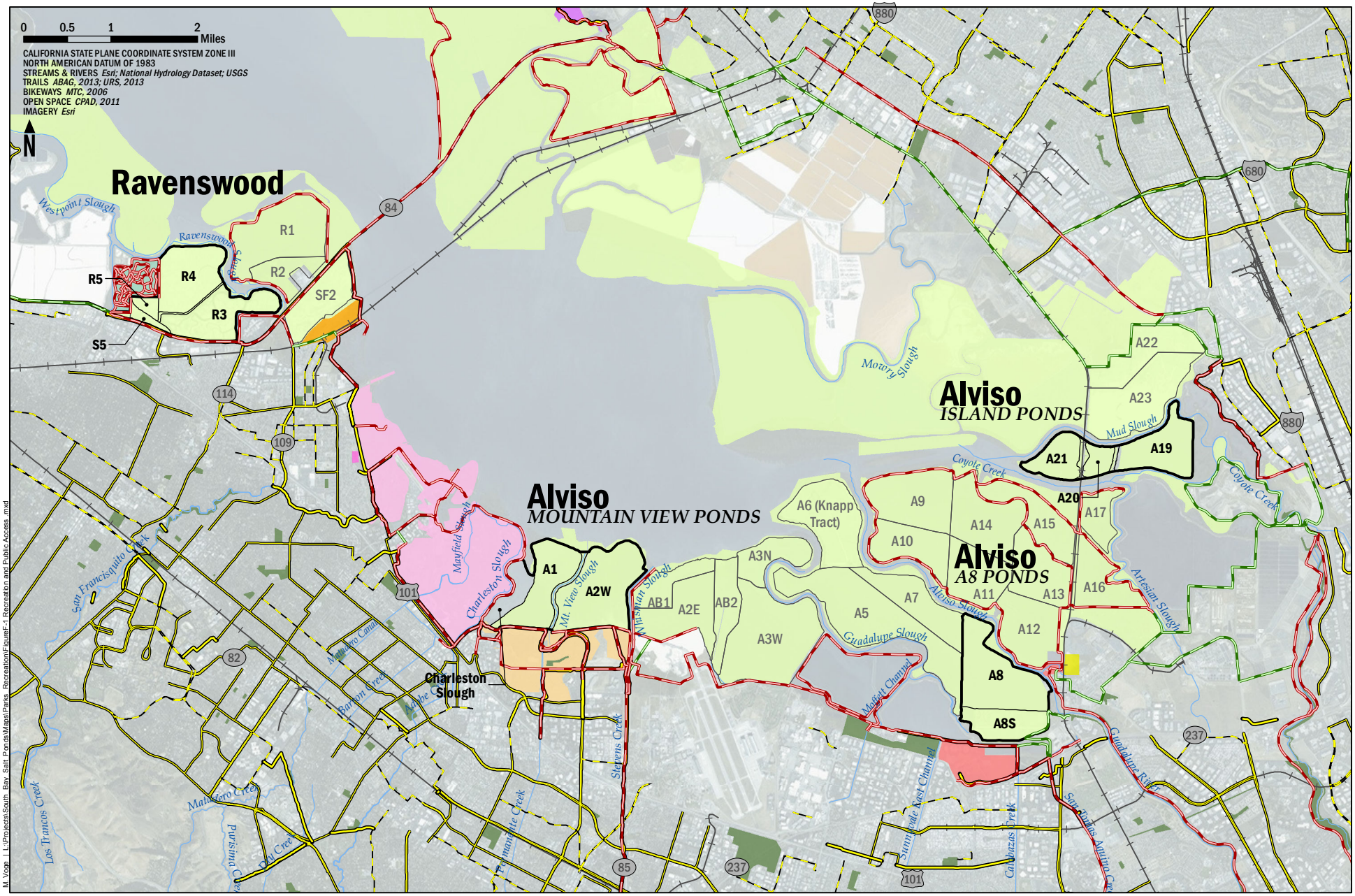

LEGEND

Trails
- Existing
- Proposed

Bike path class
- 1 - Separated path for cyclists & pedestrians
- 2 - Painted lanes solely for cyclists
- 3 - Signed routes on shared roads

Regional Open Space
- CA Department of Fish & Wildlife
- City of East Palo Alto
- City of Menlo Park
- City of Mountain View
- City of Newark
- City of Palo Alto
- East Bay Regional Park District
- San Francisco Public Utilities Commission
- San Mateo County Parks & Recreation
- Santa Clara County Parks & Recreation
- U.S. Fish & Wildlife Service
- Parks & Open Space Outside Project Area
- Phase 2 Project Area

URS

South Bay Salt Pond Restoration Project

Figure F-1

Recreation and Public Access

M.Voge | I:\Projects\South_Bay_Salt_Ponds\Maps\Parks_Recreation\FigureF-1 Recreation and Public Access .mxd

This page intentionally left blank

Table F-3 Alviso–Island Ponds Existing Public Access and Recreation

RECREATIONAL FEATURES	NEARBY LOCATIONS
Trails	**Bay Trail Spine** The nearest segment of the Bay Trail is approximately 0.5 mile east of Pond A19, constructed as part of Bayside Business Park, or approximately 1 mile north at Auto Mall Parkway.
Boating	**Bay and its tributaries** Access is not restricted in waterways around the Phase 2 ponds, but boating within the ponds is restricted to hunting (see below).
Access Points and Staging Areas	**Bayside Business Park** There are two trailheads nearby, but no land access to the Alviso-Island pond cluster (Island Ponds).
Waterfowl Hunting	**Hunting by boat is allowed.** Pond A19 is open for hunting 7 days a week during the fall and winter waterfowl hunting season. Access to Pond A19 is by boat only. Boats must access Pond A19 from the Bay and hunting is only allowed from the boat inside the pond. Shooting from levees is prohibited. Ponds A20 and 21 are not open for hunting.
Dog Use	Dogs are allowed in hunting areas during waterfowl hunting season, with a Special Use Permit.
Fishing	Fishing by boat is allowed in the Bay and sloughs only. Fishing is prohibited in all Refuge ponds and from levees.
Environmental Education Center at the Refuge	Docent-led tours and interpretive displays at the Environmental Education Center (EEC) at the Refuge provide an overview of the Island Ponds from trails at Ponds A16 and A17, south of Coyote Creek. No physical access to the area is allowed.

Table F-4 Alviso–A8 Ponds Existing Public Access and Recreation

RECREATIONAL FEATURES	NEARBY LOCATIONS
Trails	Access to levee roads is currently allowed for driving vehicles, walking, or bicycling associated with hunting. **Bay Trail Spine** Planned Bay Trail segment is located at the southwest corner of Pond A8S. Existing Bay Trail spine is located south of Pond A8S on the south side of Guadalupe Slough, adjacent to Sunnyvale Baylands Park.
	Guadalupe River Trail This trail, which is east of the project site, connects to the Bay Trail at Alviso Marina County Park.
Boating	**Bay and Its Tributaries** Access is not restricted in waterways around the Phase 2 ponds, but boating is not permitted within the ponds except during hunting season and with a permit
	Alviso Marina County Park (Santa Clara County Parks) A boat launch, marina, and a Bay Area Water Trail access point are nearby.
Parks	**Alviso Marina County Park (Santa Clara County Parks)**

	Recreation activities include hiking, bicycling, bird watching, and picnicking. Dogs are allowed in the County Park's pathways and picnic areas, but are not allowed on the trails, levees, and boardwalks. A boat launch provides access to San Francisco Bay for motorized and non-motorized watercraft. The site is a designated access point for the Bay Area Water Trail.
	Baylands Park (City of Sunnyvale) Active recreation resources include hiking, bicycling, amphitheater, picnicking, group facilities, and four playground areas. Pets are not allowed within the park.
Access Points and Staging Areas	Gold Street gate provides access to ponds and levees for hunting only.
Viewing Platforms	Wildlife observation areas, platforms, boardwalks, and benches are located at the EEC, Alviso Marina County Park, and Baylands Park.
Waterfowl Hunting	Pond A8 is open to hunting on Wednesdays, Saturdays, and Sundays during the fall and winter waterfowl hunting season. Access to ponds is allowed from Gold Street in Alviso. Hunting from the levees is allowed (walking or bicycling on levees is allowed). Hunters must maintain a minimum distance of 100 feet from adjacent hunters when hunting on the levees. Hunting from boats is allowed. Motorized vehicles on levees are not allowed.
Dog Use	Dogs are allowed in hunting areas during waterfowl hunting season, with a Special Use Permit.
Fishing	Fishing is allowed by boat in the Bay and sloughs only. Fishing is prohibited in all Refuge ponds and from levees.
Environmental Education Center at the Refuge	Docent-led tours and interpretive displays are located at the EEC, approximately 0.5 mile east of Pond A8.

Table F-5 Alviso–Mountain View Ponds Existing Public Access and Recreation

RECREATIONAL FEATURES	NEARBY LOCATIONS
Trails	**Bay Trail Spine** The Bay Trail spine is in Mountain View's Shoreline Park, south of Pond A1 and Pond A2W, west and south of Charleston Slough.
	Adobe Creek Loop Trail (Bay Trail) The Bay Trail is located west of Charleston Slough, in the Palo Alto Baylands Nature Preserve.
	Stevens Creek Trail The trail is located between Ponds A2W and A2E, on the east levee of Stevens Creek.
	Mountain View Shoreline Park The park has 8 miles of paved trails.
Access Points and Staging Areas	**Palo Alto Baylands Nature Preserve** (west of the pond cluster)
	San Antonio Road/Terminal Boulevard (parking, restrooms, and trailhead)
	Shoreline Park, Mountain View (south of the pond cluster)
Boating	**Bay and its tributaries** Access is not restricted in waterways around the Phase 2 ponds, but boating is not permitted within the ponds.
	Palo Alto Baylands Nature Preserve Non-motorized, hand-launched watercraft are allowed. There is a Bay Area Water Trail access point.
	Mountain View Shoreline Park A 50-acre sailing lake is located within Shoreline Park, with non-motorized watecraft rental and lessons, windsurfing, and other facilities

Waterfowl Hunting	Per USFWS Hunting Regulations, Ponds A2E and AB1, east of the project area, are open to waterfowl hunting on Wednesdays, Saturdays, and Sundays during the fall and winter waterfowl hunting season; a Refuge Special Use Permit is required. Ponds A1 and A2W are not open for hunting.
Dog Use	**USFWS Refuge Lands** Dogs are allowed in hunting areas during waterfowl hunting season, with a Special Use Permit
	Palo Alto Baylands Nature Preserve Dogs are allowed on leash.
	Mountain View Shoreline Park Dogs not allowed within the park. There is an adjacent dog park outside Shoreline Park's limits.
Fishing	Fishing is allowed by boat in the Bay and sloughs only. Fishing is prohibited in all Refuge ponds and from levees.
Palo Alto Baylands Park and Nature Preserve	The park offers docent-led tours, interpretive displays, environmental education field trips, hands-on activities, classroom presentations, and other outreach.
Mountain View Shoreline Park	The park offers docent-led tours focusing on the environment, interpretive displays, a Junior Ranger program, sailing, and watercraft activities. The park has an 18-hole golf course, a clubhouse, and banquet facilities. The historic Rengstorff House is located in the park, and there are areas for jogging, walking, bird watching, and kite flying.
Viewing Platforms	Wildlife observation areas, platforms, and benches are located along the site perimeter at the south end of Charleston Slough, in Palo Alto Baylands Park and Nature Preserve and Shoreline Park

Table F-6 Ravenswood Ponds Existing Public Access and Recreation

RECREATIONAL FEATURES	NEARBY LOCATIONS
Trails	**Bay Trail Spine** The Bay Trail spine extends along State Route (SR) 84/Bayfront Expressway and the south borders of Ponds R3 and S5 and continues between Ponds R2 and SF2 and onto the Dumbarton Bridge.
	Ravenswood Trail Hiking is allowed on this unimproved trail around Ponds R1 and R2, east of the Phase 2 site.
	Phase 1 Bay Trail Spur This trail lies east of the Phase 2 site, along the eastern edge of Pond SF2.
	Bedwell Bayfront Park Trail A loop trail winds around the perimeter of the park, adjacent to Ponds R4, R5, and S5. Other trails are located within the park.
	Facebook Loop Trail This trail is a paved public shoreline trail southeast of Pond R3.
Boating	No boating is allowed.
Access Points and Staging Areas	An access road and parking areas are located at the Marsh Road entrance to Bedwell Bayfront Park and further into the park on the western side, near the restrooms
Waterfowl Hunting	At Greco Island (adjacent to Pond R4), waterfowl hunting by boat only is allowed 7 days a week. No land or tidal access is allowed. At Ponds R1 and R2, waterfowl hunting is allowed seven days a week, only from the existing levees. Access to ponds is by foot or bicycle from either of two trailheads

	off SR 84. Hunting is prohibited within 300 feet of SR 84 and the Pacific Gas and Electric Company (PG&E) substation.
Dog Use	**Bedwell Bayfront Park** Dogs are allowed on leash.
	USFWS Refuge Lands Dogs are allowed in hunting areas during waterfowl hunting season, with a Special Use Permit.
Fishing	Fishing is allowed by boat in the Bay and sloughs only. Fishing is prohibited in all Refuge ponds and from levees.
Interpretive Exhibits and Viewing Platforms	Exhibits are located in the parking area at the entrance to Bedwell Bayfront Park on Marsh Road, at a viewing point at the top of the hill near the northeast corner of the park, and along the Pond SF2 Trail.

3.3 Recreation-Related Review and Permits

Proposed recreation components may be subject to various state and federal regulations that would require approvals and/or permits for proposed public access and recreation development. Depending on the location of the proposed public access and recreation facilities, the USFWS may be exempt from the permit requirements of other local and regional jurisdictions. However, because the lead agencies may partner with local or regional groups (*e.g.*, cities, counties, and regional park districts) to execute specific recreation-related project components, plan reviews, agreements, and/or permits may be needed or required. Agencies that may have review and/or permit requirements over proposed recreational components include the planning, recreation, park districts, public works, and/or flood control departments of the municipalities where the project components occur.

3.3.1 BCDC Permit Overview

The BCDC will have jurisdiction over some aspects of the SBSP Restoration Project, Phase 2's public access and recreation components. Therefore, an overview of the BCDC permit process is provided. A BCDC permit is required for all filling, dredging, and any substantial change in use or development activities at the salt pond or managed wetland areas[10]. Once BCDC receives an application, it has 30 days to determine whether the application is complete. BCDC issues three types of permits: Regionwide Permit (for routine work), Administrative Permit (minor repair or improvement), or Major Permit

[10] "Defined by the McAteer-Petris Act, the area over which the BCDC has jurisdiction can be generally described as: (1) the San Francisco Bay and all areas that are subject to tidal action from the south end of the Bay to the Golden Gate Bridge and to the Sacramento River; (2) a 100-foot-wide shoreline band located immediately landward of the edge of the Bay; (3) salt ponds; (4) managed wetlands; and (5) other certain waterways and tributaries to the Bay." (BCDC 2005a). The McAteer-Petris Act Section 66610(c) defines BCDC's "salt pond" jurisdiction as "salt ponds consisting of all areas which have been diked off from the bay and have maintained during the three years immediately preceding the effective date of the amendment of this section during the 1969 Regular Session of the Legislature for the solar evaporation of bay water in the course of salt production" (BCDC 2005b). The Act states that the "salt ponds 'jurisdiction' is retained even if an area is no longer used for salt production. Once an area is defined as a salt pond, it remains within the Commission's 'salt pond' jurisdiction. When a salt pond is opened to the tides, the area would have simultaneous 'bay' and 'salt pond' jurisdiction because the 'salt pond' jurisdiction is not extinguished when tide enters the site" (BCDC 2005b). Under the McAteer-Petris Act, the BCDC must assure that every project requiring BCDC approval provides maximum feasible public access, consistent with the proposed project (BCDC 2005a).

(extensive repair or improvement). The size, location, and impacts of a project determine the type of permit required. Each permit has its own set of requirements with respect to necessity for BCDC review, public hearing, and timeline.

Typical BCDC permit conditions include provision of public access to the Bay and other improvements; requirements for the construction, installation, use, and maintenance of public access areas; plan review requirements that must be met before construction can begin; and mitigation requirements to offset adverse environmental impacts of the project. Failure to comply with permit conditions can invalidate the permit and lead to fines and legal action against the permittee. Design of public access and recreation facilities may be evaluated for compliance with the State's climate change policies, including sea level rise.

Applications for major projects are evaluated by BCDC's Design Review Board, an advisory board made up of architects, landscape architects, engineers, and other design professionals. The design review is normally scheduled prior to a public hearing and after any draft environmental document has been circulated. Buildings or other facilities constructed on Bay fill may be evaluated by BCDC's Engineering Criteria Review Board, an advisory panel composed of civil engineers, geologists, soil engineers, structural engineers, and other experts. The Engineering Criteria Review is usually held after a permit has been issued for the project.

Table F-7 provides a summary of the types of permits or agreements that may be required to carry out specific construction or maintenance activities associated with public access and recreation development.

Table F-7 Recreation-Related Regulations and Permit Summary

ADMINISTERING AGENCIES	DESIGN REVIEW/AGREEMENT/PERMIT	REGULATION
USFWS	Provides Compatibility Determination (Priority Uses).	National Wildlife Refuge System Improvement Act
	Provides Programmatic Consultation to create the Biological Opinion.	Federal Endangered Species Act Section 7 and 9
	Requires Habitat Conservation Plan (including "take permit," no-surprises clause, safe harbors, and yet-to-be listed species protection for landowner).	Federal Endangered Species Act Section 10
	Issues "no effect" or "not likely to affect" letter.	Consultation with the United States Army Corps of Engineers (USACE) under Section 7
	Protects against destruction of migratory bird nests and possession of migratory bird "parts."	Migratory Bird Treaty Act
CDFW	California Environmental Quality Act (CEQA) review (wetland/riparian mitigation and monitoring plans).	California Environmental Quality Act
	Issues streambed alteration permit required for any modification of a streambed or bank.	California Fish and Game Code Section 1600
	Provides State Management Agreement (Take Permit) for state-listed species.	California Endangered Species Act
	Protects native resident and migratory bird eggs and nests.	California Fish and Game Code Sections 3503 and 3503.5
BCDC	Conducts reviews for filling, dredging, substantial change in use, or development activities at the salt ponds or managed wetland areas, including recreation-related projects.	McAteer-Petris Act
San Francisco Bay Regional Water Quality Control Board	Issues water quality certification as part of USACE permit.	Section 401 of the Federal Clean Water Act
United States Army Corps of Engineers	Issues Nationwide or Individual Permit to perform dredge or fill activities in the Waters of the U.S., including wetlands.	Section 404 of Federal Clean Water Act, Porter-Cologne Water Quality Act
	Issues permit to create obstructions or fill of navigable waters of the U.S.	Section 10 of the Rivers and Harbors Act of 1899

4. PROGRAMMATIC AND PHASE 1 PUBLIC ACCESS AND RECREATION ALTERNATIVES

4.1 Overview

The 2007 EIS/R included several public access and recreation alternatives based on the three programmatic alternatives developed for the SBSP project. Programmatic Alternative A would be the No Action Alternative. Programmatic Alternative B would be a 50/50-percent mix of tidal marsh and enhanced managed ponds, which was named the Managed Pond Emphasis, and Programmatic Alternative C would be a 90 percent tidal marsh/10 percent managed pond mix called the Tidal Habitat Emphasis.

Some of the public access and recreation features identified in previous planning efforts are within or adjacent to the Phase 2 project areas, and certain features were identified as being interchangeable, depending upon managed pond or tidal emphasis, and adaptively managed during implementation. Descriptions of public access and recreation alternatives are contained in the Final 2007 EIS/R, Chapter 2, Description of Alternatives; Chapter 3.7, Recreation Resources; and the following 2007 EIS/R figures:

- Alviso (includes Island Ponds, Mountain View Ponds, and A8 Ponds):
  - 2007 EIS/R Figure 2-4B Programmatic Alternative A, Alviso No Action;
  - 2007 EIS/R Figure 2-5B Programmatic Alternative B, Managed Pond Emphasis, Alviso Year 50; and
  - 2007 EIS/R Figure 2-7B Programmatic Alternative C Tidal Habitat Emphasis Alviso Year 50.
- Ravenswood:
  - 2007 EIS/R Figure 2-4C Programmatic Alternative A, Ravenswood No Action;
  - 2007 EIS/R Figure 2-5C Programmatic Alternative B, Managed Pond Emphasis, Ravenswood Year 50; and
  - 2007 EIS/R Figure 2-7C Programmatic Alternative C Tidal Habitat Emphasis Ravenswood Year 50.

A description of potential public access and recreation features within the Phase 2 project area and identified in the prior planning is summarized below. In addition, some of the trail segments identified in prior planning were of concern to regulatory agencies or stakeholders, and a notation was made on the figures for these segments: “Denotes trails that were identified during the alternatives development process as being of particular concern to permitting agencies for potential to disrupt habitat.” This means that certain trails shown on the maps in the 2007 EIS/R may not be feasible to implement and still meet the project’s wildlife habitat-related goals. Where these segments were identified is noted below.

4.2 Alviso-Island Ponds

The Alviso-Island pond cluster (also referred to as Island Ponds) consists of Ponds A19, A20, and A21; the levees surrounding each pond; and some of the fringe marsh outside of these levees, including the narrow marsh between Ponds A19 and A20.

Public Access and Recreation Components. Prior planning included an option for the Bay Trail spine to utilize the existing Union Pacific Railroad corridor and cross through the historic remains of the Town of Drawbridge. This segment would extend from the northwest corner of Pond A22 to the northwest corner of Pond A17, which is between Ponds A21 and A22 in the Phase 2 project area, and would provide an alternate route for the Bay Trail spine in the Island Ponds area. This trail segment was identified as a concern with the potential to disrupt habitat. This trail segment is not included in any alternatives for Phase 2.

4.3 Alviso-Mountain View Ponds

The Alviso-Mountain View pond cluster consists of Pond A1, Pond A2W, the levees surrounding each pond, some of the fringe marsh outside of the pond and slough levees, Permanente Creek, and Mountain View Slough. For the purposes of Phase 2 planning and in this EIS/R, Charleston Slough, which is owned by the City of Mountain View and technically not part of the Refuge, is considered part of the Mountain View pond cluster, as are the levees surrounding it.

Public Access and Recreation Components. Prior planning included a spur trail along the existing PG&E access road on the east side of Pond A2W to provide access to San Francisco Bay, with a viewing opportunity at the end of the spur. The approximately 5,000-foot-long trail segment terminated at the end of Stevens Creek/Whisman Slough.

This trail segment is included in Phase 2 Alternative C, but the Phase 2 (9,000-foot-long) trail is longer and extends further eastward towards Mountain View Slough.

4.4 Alviso-A8 Ponds

The Alviso-A8 pond cluster (also referred to as A8 Ponds) consists of Ponds A8 and A8S and the levees surrounding each pond. This pond cluster is located in the southern central portion of the 25-pond Alviso pond complex.

Public Access and Recreation Components. Prior planning identified a City of San Jose Bay Trail spine segment surrounding the “Legacy Partners” property, located at the southeast corner of Pond A8S. The City of San Jose has proposed a pedestrian bridge crossing Alviso Slough to access this proposed Bay Trail segment. Phase 1 also identified a viewing platform to be constructed at the northeastern corner of Pond A8S (to be coordinated with San Jose). This trail segment is outside the Phase 2 area; the viewing platform is not included in any alternatives for Phase 2.

4.5 Ravenswood Ponds

The Ravenswood pond cluster consists of Ponds R3, R4, R5, and S5; the levees surrounding each pond and some of the fringe marsh outside of these levees; and the All-American Canal. Existing trails, trailheads, access points and interpretive facilities within Bedwell Bayfront Park, along SR 84, and surrounding areas are not within the Phase 2 area and would remain unchanged.

Public Access and Recreation Components. At the Ravenswood Ponds, two alternatives were identified to provide public access and recreation facilities, depending on managed pond or tidal emphasis. Common to both alternatives is the provision of a year-round trail connecting the existing Bay Trail on SR 84 along the eastern edge of Ponds R4 and R5 as well as a year-round spur trail from the northeast corner of Bedwell Bayfront Park to the vicinity of Greco Island, with viewing opportunities and

interpretive displays to be developed in cooperation with the City of Menlo Park. These trails extend north from the existing Bay Trail spine and would provide year-round access to a viewing platform at the northwestern corner of Pond R4, with views to Greco Island, South San Francisco Bay, and Pond R4. This segment included a viewing platform at the northeast corner of Menlo Park's Bedwell Bayfront Park, which would be accessible via this proposed trail. Establishment of this platform would require coordination and agreement with the City of Menlo Park. An additional viewing platform would be accessible via this trail, located on the levee dividing Ponds R3 and R4. These trail segments and two viewing platforms are included in Alternatives C and D of Phase 2.

*Managed Pond Emphasis***.** For the managed pond emphasis, Programmatic Alternative B also included a year-round loop trail that would be located along the perimeter of Pond R3 to follow the existing levee that would remain. This would connect to the existing spur trail along the bayside of the Facebook complex and to the Bay Trail spine along SR 84. It would also connect to the proposed spur trail along Pond R5 and Bedwell Bayfront Park. A viewing platform was proposed where this trail meets Ravenswood Slough. This loop trail was identified as partial compensation for the loss of approximately 7 miles of trail that would be removed, consisting of an existing trail around Ponds R1 and R2 that would be breached and restored to tidal habitat. An interpretive display would be offered at the historic Red Barn site, located in the southwest corner of Bayfront Park, which would require partnership with the Cargill Company (owners of the former barn, which thereafter spent some years as a pumphouse and which is now a telemetry station). This trail segment and recreational feature were identified as a concern with the potential to disrupt habitat. This trail segment and associated recreational feature are not included in any alternatives for Phase 2.

Tidal Habitat Emphasis. For the tidal emphasis, Programmatic Alternative C also included a proposed spur trail on the east side of Pond R3 with a viewing platform and small watercraft launch at Ravenswood Slough. This trail segment and recreational feature were identified as a concern with the potential to disrupt habitat. This trail segment and its associated recreational feature are not included in any alternatives for Phase 2.

This page intentionally left blank

5. PHASE 2 PUBLIC ACCESS AND RECREATION ALTERNATIVES

The Phase 2 action alternatives propose restoration, flood management, and public access and recreation activities at four separate pond clusters: the Alviso-Island Ponds, the Alviso-Mountain View Ponds, the Alviso-A8 Ponds, and the Ravenswood Ponds. Actions at each pond cluster are independent of any activity at the other clusters and essentially constitute stand-alone projects.

5.1 Alviso-Island Ponds

The Alviso-Island pond cluster (also referred to as Island Ponds) consists of Ponds A19, A20, and A21; the levees surrounding each pond; and some of the fringe marsh outside of these levees, including the narrow marsh between Ponds A19 and A20.

Public Access and Recreation Components. No public access or recreation is currently provided, and no public access or recreation improvements are proposed as part of any Phase 2 alternatives.

5.2 Alviso-Mountain View Ponds

The Alviso-Mountain View pond cluster consists of Pond A1, Pond A2W, the levees surrounding each pond, some of the fringe marsh outside of the pond and slough levees, Permanente Creek, and Mountain View Slough. For the purposes of Phase 2 planning and in this EIS/R, Charleston Slough, which is owned by the City of Mountain View and technically not part of the Refuge, is considered part of the Mountain View pond cluster, as are the levees surrounding it.

Existing public access and recreation facilities in the general area include the Palo Alto segment of the Bay Trail, the Mountain View segment of the Bay Trail, restrooms and trailhead access facilities at San Antonio Road/Terminal Boulevard, a viewing platform at the south end of Charleston Slough, and other local trails and recreational facilities within Mountain View Shoreline Park. These facilities would remain unchanged, temporarily closed or relocated during construction, or rebuilt, depending on the project alternative; however, none of these facilities would be permanently removed.

5.2.1 Alternative Mountain View A (No Action)

Public Access and Recreation Components. No new public access or recreation features would be completed.

Existing trails on many of the levees along the boundary of the pond cluster would continue to be maintained.

5.2.2 Alternative Mountain View B

A new trail and viewing platforms would be installed to improve public access and recreation at these ponds. A new viewing platform would be constructed along the existing Bay Trail near the southeast corner of Pond A1 at Permanente Creek. A 700-foot spur trail to a viewing platform would be constructed along the improved western levee of Pond A1. Wildlife viewing opportunities from the trails along the southern shore of Pond A1 would be improved with the addition of one viewing platform. Trail design would account for landfill cells below and behind the trail, and the trail would be designed to avoid these landfill cells.

Levee crests destined for trail access would be finished with a 4-inch-thick layer of crushed gravel to provide all-weather access and to be compliant with the ABA on federal lands and with the ADA where the trails are part of the Bay Trail system or where project partners (e.g., state, county, or city agency) have compliance obligations.

5.2.3 Alternative Mountain View C

To improve public access and recreation at the Mountain View pond cluster, over 10,000 feet of new trails and four viewing platforms would be installed. As part of restoration and flood control actions, the existing Bay Trail along the improved, raised western and southern levees of Charleston Slough would be rebuilt. A viewing platform would be added to the southern trail along Pond A1. The landward side of the A1 breach would be armored to prevent the levee beneath the trail and viewing platform from being scoured away. A spur trail and interpretive feature would be constructed at the northern end of Charleston Slough. Improvements would be made to the trail along the western and southern levees of Charleston Slough to accommodate any improvements to those levees. Improvements would also be made to a trail along the levee on the east and north sides of Pond A2W to the end of the PG&E-access levee road (including a bridge over breaches on this levee), and a viewing platform would be installed on the improved levee.

Levee crests destined for trail access would be finished with a 4-inch-thick layer of crushed gravel to provide all-weather access and to be compliant with the ABA on federal lands and with the ADA where the trails are part of the Bay Trail system or where project partners (e.g., state, county, or city agency) have compliance obligations.

5.3 Alviso-A8 Ponds

The Alviso-A8 Pond cluster (also referred to as A8 Ponds) consists of Ponds A8 and A8S and the levees surrounding each pond. This pond cluster is located in the southern portion of the 25-pond Alviso pond complex.

No public access or recreation is currently provided except for in-season hunting, and no public access or recreation improvements are proposed as part of any Phase 2 alternatives.

5.4 Ravenswood Ponds

The Phase 2 Ravenswood pond cluster consists of Ponds R3, R4, R5, and S5; the levees surrounding each pond and some of the fringe marsh outside of these levees; and the All-American Canal. Existing trails, trailheads, access points, and interpretive facilities within Bedwell Bayfront Park, along SR 84, and surrounding areas are not within the Phase 2 area and would remain unchanged.

5.4.1 Alternative Ravenswood A (No Action)

No new public access or recreation features would be completed.

Existing trails at the adjacent Bedwell Bayfront Park, owned by the City of Menlo Park, and the existing Bay Trail along SR 84 would continue to be used and maintained separately.

5.4.2 Alternative Ravenswood B

A viewing platform or exhibit would be constructed on or adjacent to an existing trail near Ponds R5 and S5 to improve the public access and environmental educational benefits available at the adjacent wildlife habitat in Ponds R5 and S5.

5.4.3 Alternative Ravenswood C

A 2,700-foot improved trail along the eastern levees of Ponds R5 and S5 would be constructed and linked to the existing trails outside of these ponds. This trail would require improvements to the berm-like levees between Ponds R4 and R5, between Ponds R3 and R5, and between Ponds R3 and S5 to raise the trail elevation and provide sufficient width for a two-way trail. This alternative would include 1,500 feet of trail on an improved levee to meet sea-level rise needs as well as 1,200 feet of trail on existing levees improved to provide adequate width and level trail surface to meet accessibility guidelines. The proposed water control structures between Ponds R4 and R5 and between Ponds R3 and S5 would need to be set low enough to allow the trail to be constructed on top of them. Also, this trail would necessitate a break in the fence along the southern borders of Ponds R5 and S5 where it leaves the Refuge and connects to the Bay Trail.

A viewing platform near Ponds R5 and S5 would be constructed on or adjacent to an existing trail or the new trail described above to improve the public access and interpretive benefits available at the adjacent wildlife habitat in Ponds R5 and S5. The exact location would be determined during a later design phase. This action, by interpretive opportunities at these ponds, would provide the public with enhanced recreational experiences at the relatively high-use Bedwell Bayfront Park in Menlo Park.

A 1,200 foot spur trail and viewing platform would be constructed along the northwestern corner of Pond R4. The trail would begin at the northeast corner of Bedwell Bayfront Park and extend to the northeast along a boardwalk above the lowered and breached levee. A new viewing platform would be constructed at the northern terminus of the trail.

Levee crests destined for trail access would be finished with a 4-inch-thick layer of crushed gravel to provide all-weather access and to be compliant with the ABA on federal lands and with the ADA where the trails are part of the Bay Trail system or where project partners (e.g., state, county, or city agency) have compliance obligations.

5.4.4 Alternative Ravenswood D

A 2,700-foot trail would be constructed along the eastern levees of Ponds R5 and S5 and linked to the existing trails on the outer levees of these ponds to form a loop around these ponds. Levee improvements would be completed to allow a minimum 8-foot-wide accessible trail, and the levee would be elevated as needed to comply with the projected sea level rise. The proposed water control structures between Ponds R4 and R5 and between Ponds R3 and S5 would need to be set low enough to allow the trail to be constructed on top of them. This trail would also necessitate a break in the fence along the southern borders of Ponds R5 and S5 where it leaves the Refuge and connects to the Bay Trail.

A viewing platform or feature would be constructed on or adjacent to an existing trail near Ponds R5 and S5 to improve the public access and educational benefits available at the adjacent wildlife habitat in the ponds. Incorporating interpretive opportunities at these ponds would enhance the public's recreational experiences at the relatively high-use Bedwell Bayfront Park in Menlo Park.

A 1,200 foot spur trail and viewing platform would be constructed on the existing levee along the northwestern corner of Pond R4. The trail would begin at the corner of Bedwell Bayfront Park and extend to the northeast along the existing levee, which would be improved as needed for restoration and sea level rise projections.

Levee crests destined for trail access would be finished with a 4-inch-thick layer of crushed gravel to provide all-weather access and to be compliant with the ABA on federal lands and with the ADA where the trails are part of the Bay Trail system or where project partners (e.g., state, county, or city agency) have compliance obligations.

6. PROJECTED TRAIL USE

The trail segments proposed for the SBSP Phase 2 project area are recreational spur trails. Although they will provide public access opportunities for pedestrians and bicyclists, the trails do not constitute a through trail system (a spine trail) that would provide non-motorized commuter access from one neighborhood location to another. The existing Bay Trail segments within the project area will remain, although some segments may be temporarily closed, temporarily relocated, or rebuilt during project construction.

Based on a trail user satisfaction survey completed for the project (Sokale and Trulio 2013), recreational trail users who would be expected to use these trails are primarily local (live within 5 to 10 miles of the trail), and may drive or bicycle to the trailhead parking from where they live. In addition, a small but significant percentage of the potential trail users work in the immediate area and use the trail system during work hours. Recreational trail users include those desiring to exercise (run or walk), to walk with friends and family, and to observe nature and wildlife. As would be expected, the trail user satisfaction survey found slightly higher trail use during weekends than during week days, and slightly higher trail use during the late spring, summer, and early fall months when weather is good, rather than during the late fall and winter months when weather is more likely to be wet. The trail user survey also found that trail user priorities included keeping the trail clean and well maintained with good signage and facilities such as parking, restrooms, and benches. The 568 visitors who completed surveys were less interested in historical and natural history interpretive signs and panels, boardwalks, and overlooks.

Some trail use information for the general area of the project is reported in the trail user satisfaction survey, which allows for extrapolation and rough approximation of the number of new trail users expected as a result of the project. Between 750,000 and 900,000 people were estimated to have visited the Refuge annually between 2009 and 2011, and a majority of these visitors used the 30 miles of trails within the 30,000 acre Refuge, especially the trail system near the Visitor Center and Environmental Education Center (EEC) parking areas (Sokale and Trulio 2013). This equates to approximately 25 to 30 visitors annually per acre of Refuge, or about 25,000 to 30,000 visitors annually per mile of trail. This information does not consider that a disproportionate amount of trail use likely occurs in the 1 or 2 miles of trail immediately surrounding the main visitor center in Fremont and the EEC in Alviso, but provides a rough guide to overall trail use.

If (for discussion purposes) trail users were spread out equally each day throughout the year, this would be a daily use of about 68 to 82 people per mile of trail. Considering that trail use would be more concentrated during the better-weather months of the year, with slightly more trail use on weekends, daily trail use is likely to be in the range of 100 to 150 people per day per pond cluster during periods of highest use, with average daily use throughout the year at 50 to 60.

Trail options are being considered that range from about ¾ mile of new trail to a little more than 2 miles of new trail to be built as part of Phase 2 actions. Rough extrapolation of the annual trail use rates at the Refuge would indicate increases in daily use in the range of 50 to 60 users per pond complex for the options with minimal trail development (18,000 to 22,000 annually), and approximately 100 to 150 (200 to 300 cumulative users per day) for options that provide a more extensive recreational trail experience (73,000 to 110,000 cumulative annually).

The trail user satisfaction study (Sokale and Trulio 2013) cited trail counts completed by the City of San Jose along the more urban Guadalupe River Trail (7-hour period on Wednesday, September 18, 2012)

that recorded daily use rates of more than 1,100 people (nearly 400,00 annually). The Guadalupe River Trail provides cross-town and local transportation and commute options in addition to recreational opportunities. In contrast, trail counts that same day along the Los Gatos Creek Trail in San Jose were less than 100 users, and along the Los Alamitos Creek Trail were just over 80 users. Trail count statistics collected in San Jose indicate that trail use has increased approximately 5 to 6 percent each year, with larger increases in trails that are suitable for commuting (City of San Jose 2011).

Although they are located in an urban area, the SBSP Phase 2 trails are intended to be recreational in nature and would not provide commuting opportunities that link with a regional trail system. Based on this, the daily use estimate range of 50 to 60 users per pond complex for options with minimal trail development and 100 to 150 daily users per pond complex for a more extensive trail network are reasonable approximations.

7. PUBLIC ACCESS AND RECREATION DESIGN GUIDELINES

Where feasible, all public access and recreation facilities must be designed to be accessible. The Architectural Barriers Act standards apply to most of the Phase 2 area, which applies to facilities on federal lands. Project elements on adjacent non-federal lands or connecting to local and regional facilities must be compliant with the Americans with Disabilities Act, as well as California specific regulations for accessibility. The ABA Standards for outdoor developed areas were adopted in 2013[11], and are discussed herein.

This Section provides guidance regarding the physical design of public access and recreation features, such as trails, viewing platforms, signage, and site furnishings. This Section also identifies construction protocols that will be implemented as part of the project to minimize disturbance to adjacent areas and avoid disruption of sensitive species during construction. Trail design issues include:

- Trails;
- Boardwalks and viewing platforms;
- Signage, wayfinding and site furnishings, and
- Designs that minimize wildlife conflicts.

7.1 Trails

ABA Standards. Trails must provide a firm and stable surface, with sufficient width, gradient and vertical clearance for unobstructed passage. Trails that connect facilities such as parking areas, restrooms, and viewing platforms are considered "Outdoor Recreation Access Routes" in the ABA Standards, with a minimum 36" clear width with additional passage (60" minimum width at 200 foot intervals) and turning space (48" at 180 degree turns). A minimum of 60 inches unobstructed tread width is recommended for trails and boardwalks to minimize conflicts. The trail section must have a firm and stable surface with gaps or obstructions of less than ½ inch.

The trail should have maximum cross slope of 2 percent and 5 percent longitudinal grade. Short ramps are allowed (up to 10% for outdoor access routes and up to 12% for trail segments) to accommodate grade transitions. Since the site is relatively flat, trails will be able to be built in compliance with accessibility guidelines for trail gradient.

Recommendations. Trails that are on non-federal lands are generally required to be minimum 48" wide. For trails that are heavily used, a minimum trail width of 8 to 10 feet, with additional area for shoulders, is recommended to allow two-way trail use, or where the trail segment will be incorporated into a regional trail system, such as the Bay Trail.

The trail should be surfaced with a durable material that complies with universal access needs. Paving designs should be selected that provide permeability, where appropriate, and that fit with the shoreline setting. In some locations, it will be appropriate to remain as "natural" as feasible; therefore, the trail could be constructed as a permeable path with cemented quarry fines or decomposed granite over

[11] U. S. Access Board, 2005, *ABA Standards*, Chapter10, from http://www.access-board.gov/guidelines-and-standards/buildings-and-sites/about-the-aba-standards/aba-standards/chapter-10-recreation-facilities.

aggregate base or other stabilizer. Trail sections along ramps, bridges, culvert crossings, and boardwalk approaches, and any trails that will be routinely utilized by motorized vehicles for access and maintenance should be paved.

The trail should generally be elevated slightly above the existing grade to allow construction of a uniform trail surface without obstacles. During the design of each trail segment, the design of facilities should consider levee slope stability, erosion potential, and pathway drainage. In general, trails on levee segments would be crowned to minimize erosion risk.

Bay Trail Design Guidelines

Consistency with the Bay Trail Plan design guidelines will be needed for segments that are incorporated into this regional trail system. Some segments of the existing Bay Trail may be rebuilt, or segments added to the Bay Trail network as part of project implementation. Bay Trail Plan design guidelines are provided in Table F-8. Two-way trail segments would generally be considered multi-use paths.

Table F-8 Bay Trail Design Guidelines

ITEM	HIGH-USE (SEPARATE PATHS)*	MULTI-USE PATHS*	BICYCLE-ONLY PATHS*	HIKING-ONLY PATHS	NATURAL TRAILS
Min. width (one way)	8-10 feet	10 feet	8 feet	5 feet	3-5 feet [a]
Min. width (two way)	10-12 feet	10-12 feet	10-12 feet	8-10 feet	5 feet
Surface	asphalt[b]	asphalt	asphalt	hardened	natural/ boardwalks[c]
Horizontal clearance (including shoulders)	12-16 feet	14-16 feet	10 feet	9-12 feet	7-9 feet
Shoulder[d]	2 feet	2 feet	2 feet	2 feet	unspecified
Vertical clearance	10 feet	10 feet	10 feet	10 feet	unspecified
Cross slope	2% max	2% max	2% max	2% max	unspecified
Maximum grades[e]	5%	5%	5%	5%	unspecified

Standards meet Caltrans Class I bikeway standards

[a] Minimum widths that are less than 5 feet will be required to have 5-by-5-foot turnouts at intervals to meet accessibility standards.

[b] High-use pedestrian path could be a hardened surface other than asphalt.

[c] Natural surfaces may require surface hardening to provide accessibility.

[d] Area specified is area on both sides of the trail.

[e] Percentage grade for short distances with flat rest areas at turnouts except where site conditions require a greater slope for short distance.

A typical levee trail section is shown on **Figure F-2.**

Figure F-2. Typical Levee Trail Section

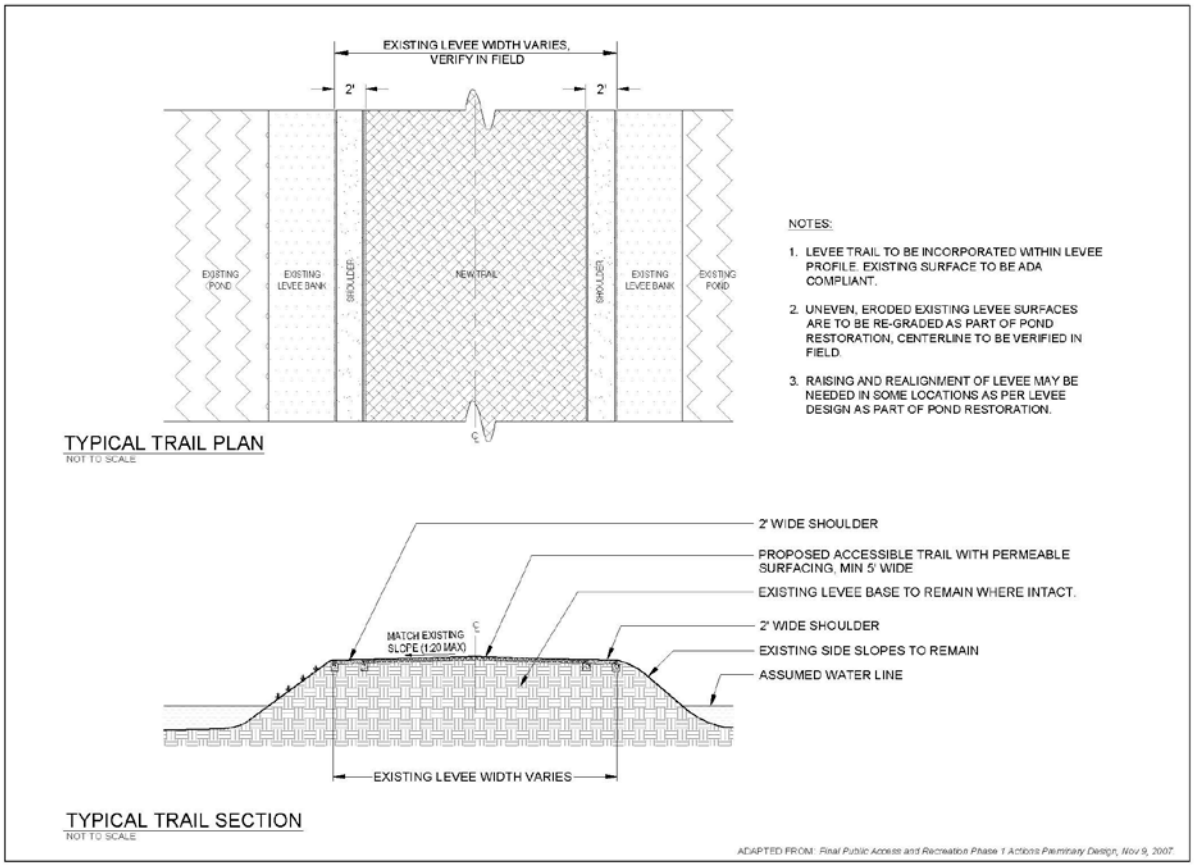

Figure F-2. Typical Levee Trail Section
SOUTH BAY SALT POND RESTORATION PROJECT

Figure F-3 Typical Boardwalk/Viewing Platform Section

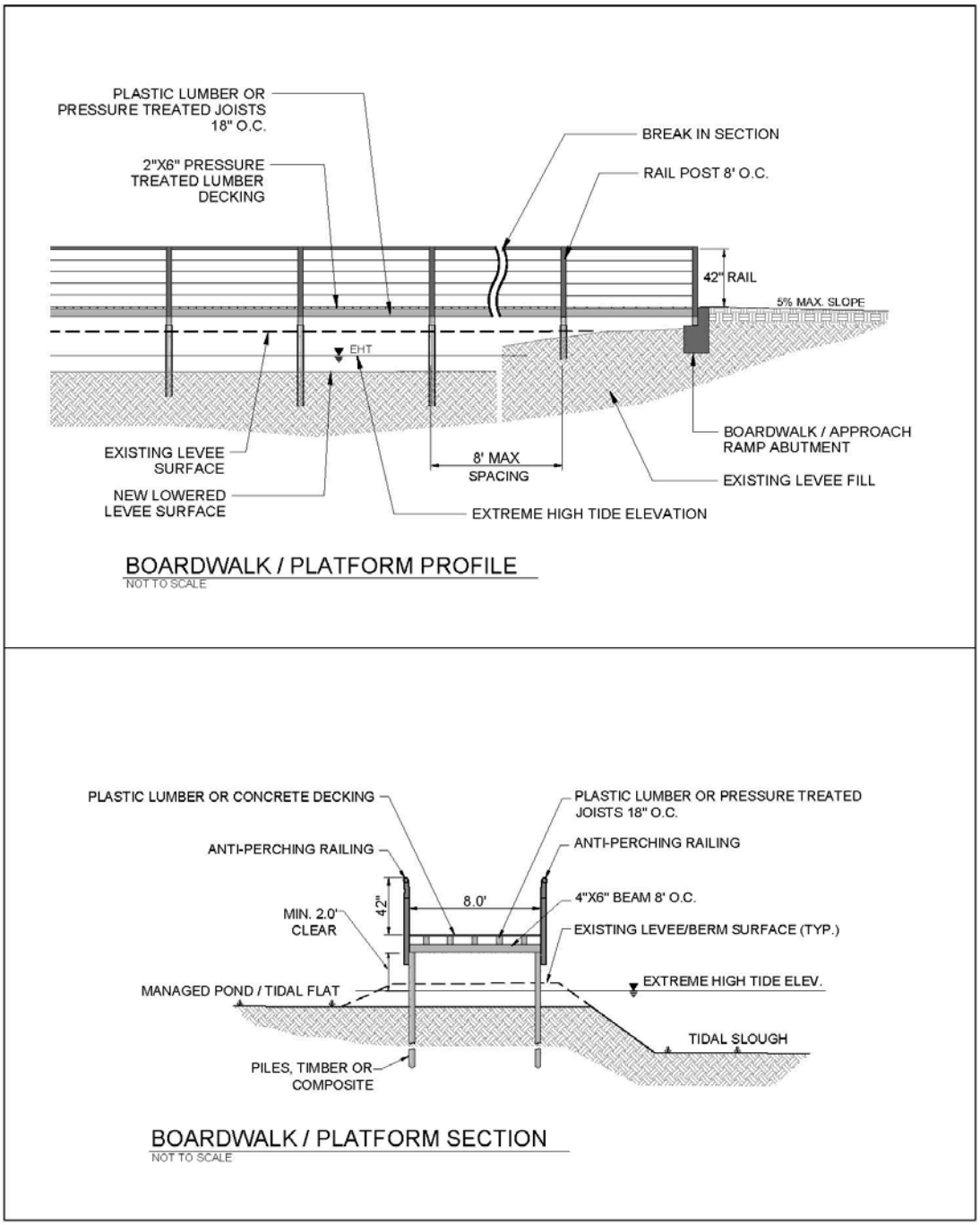

Figure F-3. Typical Boardwalk / Platform
SOUTH BAY SALT POND RESTORATION PROJECT

7.2 Boardwalks and Viewing Platforms

Boardwalks and viewing platforms are proposed in some alternatives to provide access and viewing opportunities in areas where the existing levees will be lowered for improved tidal action. Boardwalks are also used to provide a separation between trail users and adjacent habitat. Boardwalks and viewing platforms would generally be constructed within or adjacent to the existing levee/upland footprint. A typical boardwalk and platform section is shown on **Figure F-3.**

ABA Standards. Trails that connect facilities such as parking areas to viewing platforms are considered Outdoor Recreation Access Routes, as discussed above. Viewing areas must contain a minimum 36”x48”clear space for each viewing area. Railings and/or edge protection must be provided to prevent slipping off the platform. Gradient requirements are the same as for trails.

Recommendations. If a boardwalk is constructed, it should be built using strong and durable materials requiring a minimum of maintenance and capable of supporting lightweight vehicle loads. Because the boardwalk would be on or adjacent to constructed wetlands, use of construction materials and methods that minimize disturbance are critically important. Non-corrosive piers or pilings would likely be used for the boardwalk foundation system, and coated or sealed to avoid leaching of material into adjacent soft soils. The recommended boardwalk would consist of, at a minimum, 2- by-6-inch joists and 4-by-6-inch beams of Trimax (or equivalent structural composite lumber) or Ipe (sustainable, long-life tropical hardwood) and 2-by-6-inch recycled plastic lumber decking. The boardwalks would connect to the adjacent grade with approach ramps constructed of engineered fill at a maximum 5 percent slope. Prefabricated galvanized steel, aluminum, or other materials should also be considered.

Detailed foundation and structural recommendations must be followed up with a comprehensive geotechnical investigation and structural analysis as part of the development of final construction plans.

7.3 Signage, Wayfinding and Site Furnishings

Signs, interpretive elements, benches, viewing scopes and other built features must be located to provide adequate usable space as well as vertical clearance. These elements should not be placed within the area designated as a trail or access route.

Caltrans’ *California Manual on Uniform Traffic Control Devices* (Caltrans 2014) includes advisory, warning, directional, and informational signs for bicyclists, pedestrians, and other users. Signage for the project should be consistent with all regulatory agencies.

Sign design should be consistent throughout the project, and sign elements should be grouped and designed to minimize visual intrusion. Sign elements may include more than one agency’s signs as well as directional and informational elements. In accordance with accessibility regulations, it may be appropriate to provide information about a trail’s running slope, width, cross-slope, and other characteristics to enable people to make informed decisions about using trails based on the characteristics of the trails. Signs along the levee top will be minimized to avoid creation of raptor perches.

In general, all signs should be located 2 to4 feet from the edge of the trail surface, have a minimum vertical clearance of 8.5 feet when located above the trail surface, and be a minimum of 4 feet above the

trail surface when located on the side of the trail. All signs should be oriented so that trail users can see them clearly.

Facilities that were installed in fall 2013 at Cullinan Ranch, which is part of San Pablo Bay National Wildlife Refuge, are shown on Figure F-4. These facilities include prefabricated ramps, dock platforms, a viewing platform, a permeable trail, and other facilities that incorporate composite materials that may be appropriate for use at the SBSP Phase 2 site Design themes and prototypical site furnishings were developed as part of Phase 1 actions and should be continued, where appropriate, to provide a common design scheme. Typical site furnishings (developed for and implemented in Phase 1) are shown on Figures F-5, and F-6.

7.4 Design to Minimize Wildlife Conflicts

An important component of providing public access near sensitive wildlife areas is to limit the potential impact of human intrusion and trespass into sensitive areas. The selection of public access alternatives to be considered as part of project evaluation has included extensive input from regulatory agencies as well as site-specific studies. All proposed trails are located on existing levees, and several project alternatives include the creation of habitat transition zones to increase habitat diversity as well as provide a buffer between trails and areas that may become habitat to sensitive species in the future.

Figure F-4. Facilities at Cullinan Ranch, San Pablo Bay National Wildlife Refuge

Typical Boardwalk and Platform Elements[7]

[7] Cullinan Ranch, San Pablo Bay National Wildlife Refuge, January 2014

Figure F-5. Typical South Bay Salt Pond Restoration Project, Phase 1, Viewing Platform Furnishings (Ravenswood Pond SF2)

Typical Phase 1 Recreation and Public Access Features

Figure F-6. Typical South Bay Salt Pond Restoration Project Phase 1 Bench

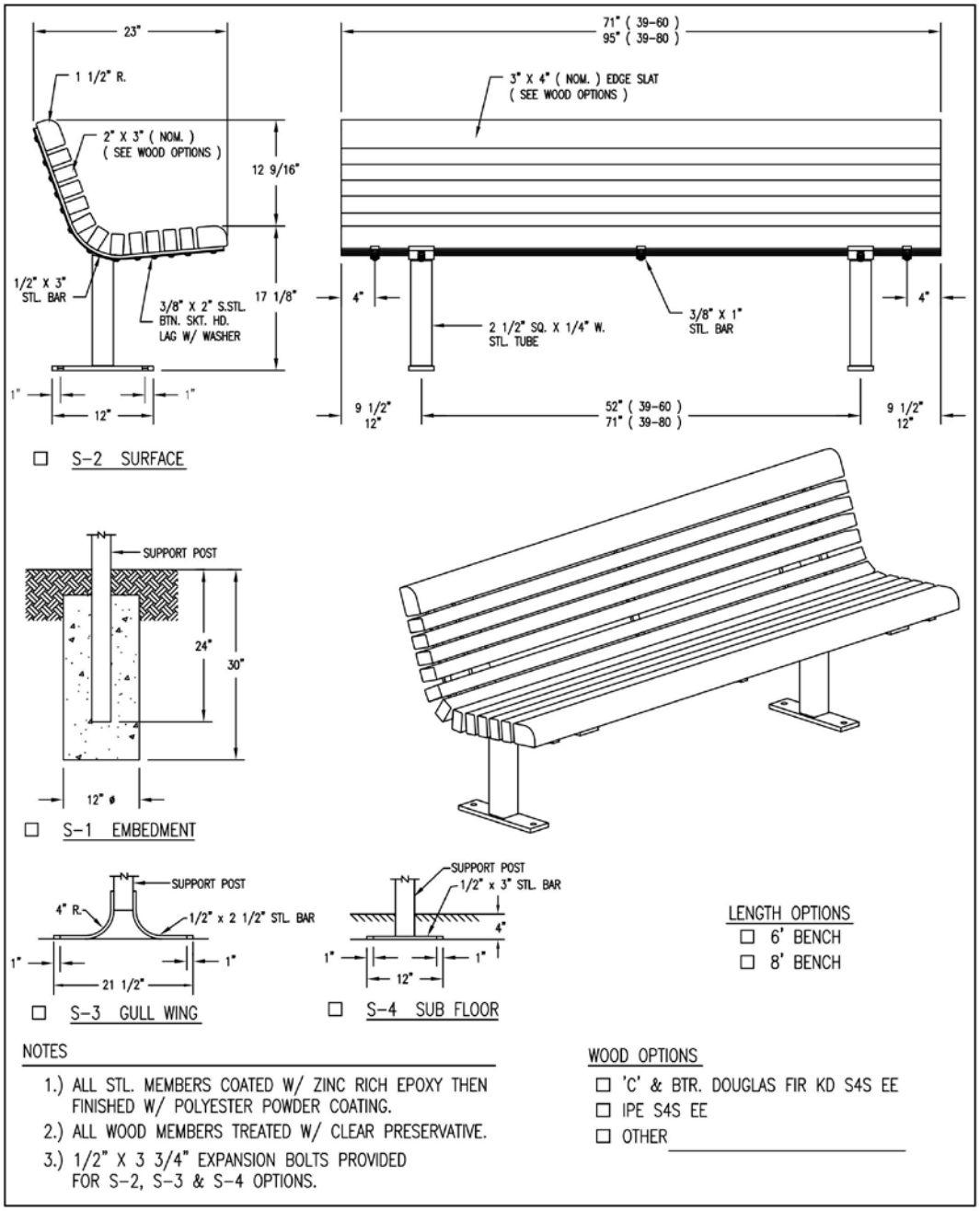

Figure F-6. Typical Bench
SOUTH BAY SALT POND RESTORATION PROJECT

This page intentionally left blank

8. REFERENCES

Alameda County Open Space Element, May 5, 1994

Alameda County Recreation Element, May 5, 1994.

Alameda County Transportation Commission, October 2012, *Alameda Countywide Bicycle Plan*.

Alameda County Transportation Commission, October 2012, *Alameda Countywide Pedestrian Plan*,

Architectural and Transportation Barriers Compliance Board, September 26, 2013, Architectural Barriers Act Accessibility Guidelines; Outdoor Developed Areas, Final Rule, 36 CFR Part 1191 RIN 3014-AA22.

Association of Bay Area Governments, 1999, *Bay Trail Plan*, from http://www.baytrail.org/baytrailplan.html#plansummary.

California Code of Regulations, Title 24 Part 2, November 1, 2013.

California State Coastal Conservancy, March 2011, *San Francisco Bay Area Water Trail Enhanced Water Trail Plan*.

California State Coastal Conservancy, March 2011, *San Francisco Bay Area Water Trail Final Environmental Impact Report*.

California Department of Transportation (Caltrans), 2014, *California Manual on Uniform Traffic Control Devices*, from http://www.dot.ca.gov/hq/traffops/engineering/mutcd/pdf/camutcd2014/CAMUTCD2014.pdf.

City/County Association of Governments of San Mateo County, September 2011, *San Mateo County Comprehensive Bicycle and Pedestrian Plan*.

City of Fremont, December 13, 2011, *General Plan Update*.

City of Fremont, January 2012, *Bicycle Master Plan*.

City of Fremont, December 2007, *Pedestrian Master Plan*.

City of San Jose, 2011, Trail Count 2011.

City of Menlo Park, May 21, 2013, *Open Space, Conservation, Noise and Safety Elements*.

City of Menlo Park, 2005, *Menlo Park Comprehensive Bicycle Development Plan*.

City of Mountain View, July 10, 2012, *2030 General Plan*.

City of Mountain View, January 2015, *Bicycle Plan, Bicycle Transportation Plan Update*.

City of Mountain View, January 2014, *Pedestrian Master Plan*.

City of Mountain View, December 2014, *North Bayshore Precise Plan*.

City of Palo Alto, 2007, *Comprehensive Plan*.

City of San Jose, *Envision San Jose 2040*.

EDAW, November 9, 2007, *South Bay Salt Pond Restoration Project Public Access and Recreation Final Preliminary Design*.

EDAW, et. al., December 2007, *South Bay Salt Pond Restoration Project Final EIS/R*.

Life Science!, June 2003, *South Bay Salt Ponds Initial Stewardship Plan*.

Monroe, M., et al, SFEI, 1997, *Baylands Ecosystem Habitat Goals Report*.

Mruz, Eric. Refuge Manager, Don Edwards San Francisco Bay National Wildlife Refuge. Personal Communication, August 2013.

National Highway Cooperative Research Program. *Guidelines for Analysis of Investments in Bicycle Facilities*. Transportation Research Board 2006, Washington, DC

San Francisco Bay Conservation and Development Commission, July 2007, *Access Points for Human-Powered Boats and Beachable Sail Craft on San Francisco Bay*.

San Francisco Bay Conservation and Development Commission, 1968, amended September 2006, *San Francisco Bay Plan.*

San Francisco Bay Conservation and Development Commission, April 2005, *Shoreline Spaces; Public Access Design Guidelines for the San Francisco Bay*.

San Francisco Bay Joint Venture (SFBJV), 2001, *Implementation Strategy*, from http://www.sfbayjv.org/about-strategy.php

San Francisco Estuary Project, 2007, *Comprehensive Conservation Management Plan*, from http://www.sfestuary.org/about-us/strategic-plan/.

Santa Clara County, *General Plan 1994*.

Santa Clara County, *Trails Master Plan Update November 1995*.

Santa Clara Valley Water District, September 30, 2010, *Draft Flood Protection and Stream Stewardship Master Plan*.

San Mateo County, November 1986, *General Plan Policies*.

Sokale, Jana, and Lynne Trulio, September 21, 2013, *South Bay Salt Pond Restoration Project: Trail User Satisfaction Study*.

Trulio, Lynne, Ecological Research Center, US Geological Survey, et al., January 31, 2012, *Report on Nesting Snowy Plover Response to New Trail Use in the South Bay Salt Pond Restoration Project*.

U.S. Access Board, Architectural Barriers Act Standards, from http://www.access-board.gov/guidelines-and-standards/buildings-and-sites/about-the-aba-standards/aba-standards.

U.S. Access Board, Americans with Disabilities Act Standards, from http://www.access-board.gov/guidelines-and-standards/buildings-and-sites/about-the-ada-standards/ada-standards.

U. S. Fish and Wildlife Service, 2012. *Comprehensive Conservation Plan for Don Edwards San Francisco Bay National Wildlife Refuge*.

U. S. Fish and Wildlife Service, 2013, *2013 -2014 Waterfowl Hunting Regulations*, from http://www.fws.gov/refuge/Don_Edwards_San_Francisco_Bay/hunting.html.

Valley Transportation Authority, *Santa Clara Countywide Bicycle Plan*, August 2008.

This page intentionally left blank