Appendix B
Applicant's Description of the Project

PROJECT DESCRIPTION

PacifiCorp (doing business as Rocky Mountain Power), the Applicant for right-of-way across federal lands for the purpose of constructing, operating, and maintaining the proposed Gateway South transmission line as associated facilities, submitted this description of the project to enable the Bureau of Land Management (BLM), to determine and disclose the potential impacts of the project on the environment. This project description includes descriptions of components (e.g., transmission line structures, communication system, series compensation stations, terminal substations) and activities associated with construction, operation, and maintenance associated with a typical 500-kilovolt transmission line. The project description applies to all alternative routes addressed in the Energy Gateway South Transmission Project Environmental Impact Statement (EIS). In a few instances, calculations are provided for an alternative route, but are intended to be representative of all alternative routes. The project description included as Appendix B in the Draft EIS (January 2014) was refined from the original application (December 2008) and submitted to the BLM in August 2013, and was updated most recently in early 2015 for preparing the Final EIS.

CONTENTS

1 INTRODUCTION 1-1
1.1 Transmission Segment Descriptions 1-2
1.1.1 Segment 1 Aeolus – Series Compensation Substation No. 1 1-2
1.1.2 Segment 2 Series Compensation Substation No. 1 – Series Compensation Substation No. 2 1-2
1.1.3 Segment 3 Series Compensation Substation No. 2 – Clover Substation 1-2
1.1.4 Segment 4a Clover Substation – Mona Substation No. 1 1-2
1.1.5 Segment 4b Clover Substation – Mona Substation No. 2 1-2
1.1.6 Segment 4c Mona Substation – Huntington Substation 1-3
1.1.7 Bears Ears to Bonanza 345kV Relocation 1-3
1.2 Substation Descriptions 1-3
1.2.1 Aeolus Substation 1-3
1.2.2 Series Compensation Substation No. 1 1-3
1.2.3 Series Compensation Substation No. 2 1-3
1.2.4 Clover Substation 1-4
1.2.5 Mona Substation 1-4
2 SYSTEM COMPONENTS 2-1
2.1 Transmission Structures 2-1
2.1.1 Types of Transmission Line Support Structures 2-1
2.1.2 Structure and Conductor Clearances 2-8
2.1.3 Structure Foundations 2-8
2.2 Conductors 2-9
2.2.1 Conductors for Segments 1, 2, and 3 2-9
2.2.2 Conductors for Segments 4a and 4b 2-9
2.2.3 Conductors for Segment4c 2-9
2.3 Other Hardware 2-10
2.3.1 Insulators 2-10
2.3.2 Grounding Systems 2-10
2.3.3 Minor Additional Hardware 2-10
2.3.4 Potential for Cathodic Protection 2-11
2.4 Communications Systems 2-11
2.4.1 Optical Ground Wire 2-11
2.4.2 Regeneration Stations 2-12
2.5 Access to the Right of Way 2-13
2.6 Series Compensation Substations 2-16
2.6.1 Bay 2-16
2.6.2 Access Road 2-16
2.6.3 Control Building 2-16
2.6.4 Fencing 2-17
2.6.5 Distribution Supply Lines 2-17
3 SYSTEM CONSTRUCTION 3-1
3.1 Land Requirements and Disturbance 3-1
3.1.1 Right-of-Way Width 3-1
3.1.2 Right-of-Way Acquisition 3-2
3.1.3 Land Disturbance 3-2
3.2 Transmission Line Construction 3-4
3.2.1 Transmission Line System Access 3-4
3.2.2 Geotechnical Investigations within the Right-of-way 3-5
3.2.3 Multi-purpose Yards 3-8

3.2.4 Site Preparation 3-8
3.2.5 Install Structure Foundations 3-8
3.2.6 Erect Support Structures 3-10
3.2.7 String Conductors, Shield Wire, and Fiber Optic Ground Wire 3-11
3.2.8 Site Reclamation 3-13
3.3 Communications System 3-14
3.3.1 Regeneration Stations 3-14
3.3.2 Access Road 3-14
3.4 Substation/Series Compensation Substation Construction 3-15
3.4.1 Substation Roads 3-16
3.4.2 Geotechnical Drilling 3-16
3.4.3 Clearing and Grading 3-16
3.4.4 Multi-purpose Yards 3-16
3.4.5 Grounding 3-17
3.4.6 Fencing 3-17
3.4.7 Foundation Installation 3-17
3.4.8 Oil Containment 3-17
3.4.9 Structure, Control Building, and Equipment Installation 3-18
3.4.10 Control Building Construction 3-18
3.4.11 Conductor Installation 3-18
3.4.12 Conduit and Control Cable Installation 3-18
3.4.13 Construction Cleanup 3-18
3.4.14 Reclamation 3-18
3.5 Special Construction Techniques 3-19
3.5.1 Blasting 3-19
3.5.2 Helicopter Use 3-19
3.5.3 Water Use 3-20
3.6 Construction Elements 3-21
3.6.1 Construction Workforce 3-21
3.6.2 Construction Equipment and Traffic 3-22
3.6.3 Construction Equipment and Traffic 3-22
3.6.4 Removal of Facilities and Waste Disposal 3-32
3.6.5 Construction Schedule 3-32
4 SYSTEM OPERATION AND MAINTENANCE 4-1
4.1 Routine System Operation and Maintenance 4-1
4.1.1 Routine System Inspection, Maintenance, and Repair 4-2
4.1.2 Transmission Line Maintenance 4-2
4.1.3 Hardware Maintenance and Repairs 4-2
4.1.4 Access Road and Work Area Repair 4-3
4.1.5 Vegetation Management 4-3
4.1.6 Substation and Regeneration Station Maintenance 4-7
4.2 Emergency Response 4-8
4.2.1 Fire Protection 4-8
5 DECOMMISSIONING 5-1
REFERENCES 1
Attachment A – Access Road Standards 1

FIGURES

Figure 1 Project Layout Diagram 1-5
Figure 2 Proposed Tangent Single-circuit 500-kilovolt Lattice Steel Structure (Delta Configuration) 2-2
Figure 3 Alternate Proposed Single-circuit 500-kilovolt Lattice Steel Structure (Horizontal Configuration) 2-2
Figure 4 Proposed Tangent Single-circuit 500-kilovolt H-frame Structure 2-3
Figure 5 Proposed Guyed V 2-3
Figure 6 Proposed Guyed Delta 2-4
Figure 7 Proposed Tangent Single-circuit 345-kilovolt H-frame Structure 2-5
Figure 8 Proposed Single-circuit 345-kilovolt Mono-pole Tangent Structure (for angles 0°–5°) 2-6
Figure 9 Proposed Double-circuit 345-kilovolt Mono-pole Tangent Structure (for angles 0°–5°) 2-7
Figure 10 Typical Regeneration Station Site 2-13
Figure 11 Typical 500-kilovolt Substation 2-17
Figure 12 Transmission Line Construction Sequence 3-4
Figure 13 Conductor Installation 3-12
Figure 14 Live-line Maintenance Space Requirements, Single-circuit 345-kilovolt Line 4-4
Figure 15 Live-line Maintenance Space Requirements, Single-circuit 500-kilovolt Line 4-5
Figure 16 Single-circuit 345-kilovolt Line (top), Single-circuit 500-kilovolt Line (bottom) 4-6
Figure 17 Right-of-way Vegetation Management in Steep Terrain 4-7

TABLES

Table 1 Typical 500-kilovolt Structure Type Foundation 2-8
Table 2 Typical 345-kilovolt Structure Type Foundations 2-9
Table 3 Summary of Land Disturbance Required for Construction and Operation of the 500- and 345-kilovolt Transmission Lines 3-2
Table 4 Estimated Water Usage 3-21
Table 5 Work Force Estimation – Duration and Totals for Construction of a 500-kilovolt Transmission Line 3-23
Table 6 Equipment and Manpower Needed for Series Compensation Stations 3-25
Table 7 Typical Equipment and Duration of Use for Construction of a 500-kilovolt Transmission Line 3-27
Table 8a Project Duration Schedule – Months 1 to 8 3-35
Table 8b Project Duration Schedule – Months 9 to 16 3-36
Table 8c Project Duration Schedule – Months 17 to 24 3-37
Table 8d Project Duration Schedule – Months 25 to 32 3-38

LIST OF ACRONYMS

AC	Alternating current
ANSI	American National Standards Institute
ATV	All-terrain vehicle
CPT	Cone penetration test
EIS	Environmental impact statement
FAA	Federal Aviation Administration
IEEE	Institute of Electrical and Electronics Engineers
IRP	Integrated Resource Plan
kV	Kilovolt
MW	Megawatt
NEPA	National Environmental Policy Act of 1969
NERC	North American Electricity Reliability Council
NESC	National Electrical Safety Code
OATT	Open access transmission tariff
OHGW	Overhead ground wire
OPGW	Optical ground wire
POD	Plan of Development
ReMi	Refraction microtremor
WECC	Western Electricity Coordinating Council

1 INTRODUCTION

This appendix contains information provided by PacifiCorp (doing business as Rocky Mountain Power, the Company), applicant for right-of-way across federal land for construction, operation, and maintenance of the Energy Gateway South Transmission Project (Gateway South or Project). This appendix provides detailed information regarding the scope of work and components of the transmission system evaluated in the environmental impact statement (EIS) for the Project, including the transmission structures, communications system, and substations and series compensation stations. The component descriptions (Section 1.0) apply to the transmission segments and substation descriptions. It provides details regarding the system components (Section 2.0) and construction of the system (Section 3.0), provides information regarding the operations and maintenance of the system (Section 4.0), and decommissioning (Section 5.0).

The Project is part of the Company's transmission expansion program, called Energy Gateway, which is intended to add new transmission lines connecting new and existing generation resources to customers throughout the Company's service territory. Energy Gateway is composed of several large-scale projects that will address customers' increasing electric energy use and improve system reliability.

The Project is designed to provide 1,500 megawatts (MW) of new capacity needed to meet the current and forecasted needs of the Company's customers. These forecasts are based on the Company's 2013 Integrated Resource Plan (IRP) as required to fulfill the regulatory requirements and guidelines established by the public utility commissions of the states served by the Company. The IRP addresses the obligations of each company pursuant to its open access transmission tariff (OATT) to plan for and expand its transmission system in a nondiscriminatory manner based on the needs of its native load and network customers.

Gateway South is independent of, and would be built regardless of, any particular new generation or transmission project(s) that are also planned. The transmission grid, of which it would become a part, can be thought of in terms of hubs, spokes, and a backbone connecting the hubs. Each substation is a hub, and receives or sends electricity along the spokes. For this system to work, a backbone of high-capacity transmission lines is needed to connect the hubs and transport the electricity to where it is needed.

The purpose of the transmission line is to satisfy several distinct, yet inter-related needs, explained above. The purposes of the Project relative to meeting these needs are summarized below:

- Provide long-term transmission capacity to move resources to growing load centers
- Connect Gateway West and Gateway Central, providing operational flexibility for the bulk electric network, reliability, and supports path ratings for each segment
- Improve capacity and reliability of other interconnected transmission lines associated with Energy Gateway
- Reduce transmission limitations on the existing system
- Provide incremental transmission capacity planned at approximately 1,500 MW

As proposed, the Project would be comprised of an extra-high-voltage alternating current (AC) transmission line that would run between planned, proposed, and existing substations. A proposed single-circuit 500-kilovolt (kV) transmission line approximately 400 to 540 miles in length (depending on the alternative route chosen) would begin at the planned Aeolus Substation (planned as part of Gateway West) near Medicine Bow, Wyoming; connect to two separate, proposed series compensation substations;

and terminate at the existing Clover Substation (built as part of Gateway Central) near Mona, Utah. The two proposed series compensation substations would be located at approximately the one-third and two-thirds points of the transmission line between the Aeolus and Clover substations. Modifications at the existing Mona Substation are required to re-terminate existing lines to accommodate the nearby 500kV termination at Clover Substation.

1.1 Transmission Segment Descriptions

A schematic diagram of the Project segments described below is provided as Figure 1 – Project Layout Diagram.

1.1.1 Segment 1 Aeolus – Series Compensation Substation No. 1

Segment 1 is composed of one single-circuit 500kV transmission line[1] proposed between the planned Aeolus Substation near Medicine Bow, Wyoming, and the proposed Series Compensation Substation No. 1. The location of Series Compensation Substation No.1 would be dependent on the transmission-line route selected.

1.1.2 Segment 2 Series Compensation Substation No. 1 – Series Compensation Substation No. 2

Segment 2 is composed of one single-circuit 500kV transmission line proposed between the proposed Series Compensation Substation No. 1 and the proposed Series Compensation Substation No. 2. The location of Series Compensation Substation No. 2 would be dependent on transmission-line route selected.

1.1.3 Segment 3 Series Compensation Substation No. 2 – Clover Substation

Segment 3 is composed of one single-circuit 500kV transmission line proposed between the proposed Series Compensation Substation No. 2 and the Clover Substation. The location of Clover Substation is near Mona, Utah.

1.1.4 Segment 4a Clover Substation – Mona Substation No. 1

Segment 4a consists of rebuilding the single-circuit portion of the Clover – Mona 345kV No. 1 transmission line between the Clover Substation and the Mona Substation. The line is approximately 3 miles in length and would be rebuilt on existing right-of-way.

1.1.5 Segment 4b Clover Substation – Mona Substation No. 2

Segment 4b consists of rebuilding the single-circuit portion of the Clover – Mona 345kV No. 2 transmission line between the Clover Substation and the Mona Substation. The line is approximately 3 miles in length and would be rebuilt on existing right-of-way.

[1] A single-circuit transmission line (whether 345kV or 500kV) is composed of three electrical phases and two lightning protection shield wires. One of the lighting-protection shield wires is a steel overhead ground wire (OHGW), and the other is typically an optical ground wire (OPGW). The OPGW contains glass fibers used for communication along the fiber path for data transfer between the Company's facilities. The data transferred is required for system control and monitoring.

1.1.6 Segment 4c Mona Substation – Huntington Substation

Segment 4c consists of rerouting the existing Mona – Huntington 345kV transmission line into the Clover Substation and then out of the substation headed north to the Mona Substation. This reroute would involve construction of two new single-circuit 345kV transmission-line segments extending off the existing route, approximately 1 mile in length each.

A new transmission-line corridor would be needed for the north-south portion of the new line between the Mona Substation and Clover Substation, north of the Clover Substation. Also, a new transmission corridor would be needed for a new alignment extending east-west from the existing Mona – Huntington 345kV line into the existing Clover Substation. Existing/abandoned structures would be removed when the new transmission lines are placed in service.

1.1.7 Bears Ears to Bonanza 345kV Relocation

PacifiCorp will relocate a small portion of the existing Bears Ears to Bonanza line outside the Raven Ridge ACEC in a manner as to also accommodate the GWS alignment outside the ACEC. Engineering details regarding the relocation will be completed upon approval of a final route in the Record of Decision and right-of-way grant.

1.2 Substation Descriptions

1.2.1 Aeolus Substation

This planned substation will be built as part of the Gateway West and a single 500kV dead-end structure will be constructed inside that substation for this Project. Major facility/equipment additions to be installed at Aeolus Substation for Gateway South include, but are not limited to, substation steel dead-end structures and bus work. It is anticipated that all work involved with terminating the Gateway South 500kV line would be performed within the substation fence as proposed by Gateway West.

1.2.2 Series Compensation Substation No. 1

Construction of proposed Series Compensation Substation No. 1 would consist of installation of circuit breakers and related switching equipment, bus supports, and other equipment to be installed for the 500kV transmission-line structures. Additional equipment, including 500kV series capacitors, shunt-reactor banks, and emergency generators along with all associated site preparation, fencing, foundations, protection, control, communications equipment, and metering would be installed. Locations for the series compensation stations have not yet been identified, but would be located approximately one-third the distance from the Aeolus Substation to the planned Clover Substation. Based on a route of approximately 400 miles, this places this station approximately 133 miles from Aeolus Substation.

1.2.3 Series Compensation Substation No. 2

Construction of proposed Series Compensation Substation No. 2 would consist of installation of circuit breakers and related switching equipment, bus supports, and other equipment to be installed for the 500kV transmission-line structures. Additional equipment, including 500kV series capacitors, shunt-reactor banks, and emergency generators along with all associated site preparation, fencing, foundations, protection, control, communications equipment, and metering would be installed. Locations for the series compensation stations have not yet been identified, but generally would be located approximately two-thirds the distance from the planned Aeolus Substation to the planned Clover Substation. Based on aroute

of approximately 400 miles, this places this station approximately 133 miles from both Clover Substation and Series Compensation Station No. 1.

1.2.4 Clover Substation

Clover Substation is an existing facility of Gateway Central and has been permitted and assessed under previous National Environmental Policy Act (NEPA) documentation. Expansion of the existing facility, within the area previously permitted and assessed, is necessary to accommodate the equipment required to terminate the new 500kV and 345kV transmission lines into the substation. Major facility/equipment additions to Clover Substation include, but are not limited to, 500kV and 345kV related equipment; i.e., circuit breaker(s), shunt capacitor(s), series capacitor(s), and shunt reactor(s) along with all associated site preparation, fencing, foundations, steel substation towers, bus work, and protection and control metering.

1.2.5 Mona Substation

Changes to the existing Mona Substation occurring within the existing fence line include installation of new circuit breakers, protective relaying metering, substation structural members, and bus work to upgrade the Mona to Clover No. 1 and No. 2 transmission line bays. For Gateway South, it is anticipated that the current footprint of the Mona Substation will remain the same with no expansion of the substation required.

Figure 1 Project Layout Diagram

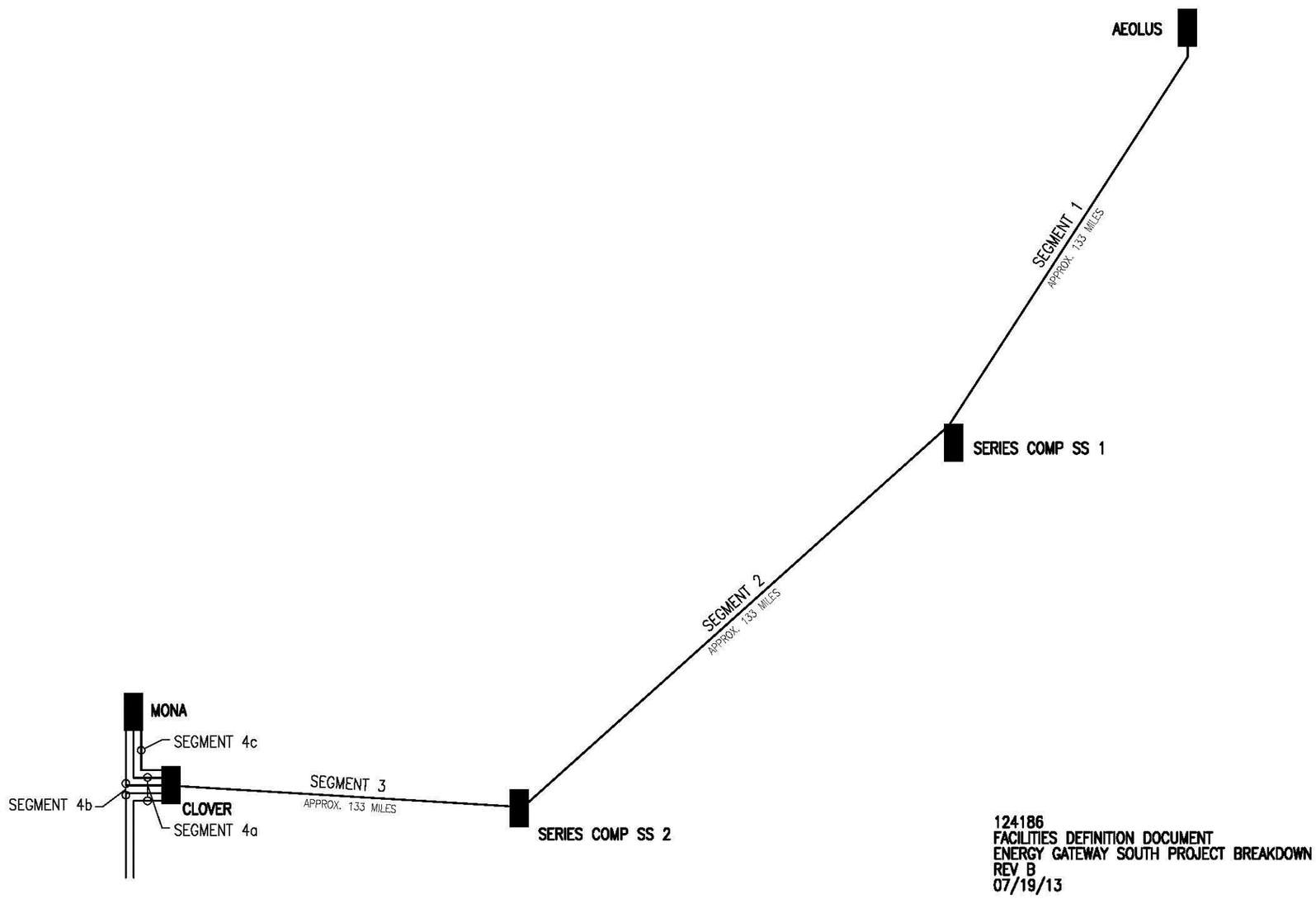

2 SYSTEM COMPONENTS

This section describes the various components of the transmission system for the Project, including the structures themselves, conductors used, other hardware needed, communication system, access to right-of-way, and, finally, the substations. Both the proposed and alternative structures are described below.

2.1 Transmission Structures

2.1.1 Types of Transmission Line Support Structures

The proposed transmission line circuits typically would be supported by the following types of 500/345kV structures: 500kV self-supporting single circuit lattice steel, self-supporting single circuit steel H-frame, single circuit "guyed" lattice steel, single circuit steel mono-pole and/or 345kV double circuit steel mono-pole structures. Tangent structures are designed to support the conductors where the transmission-line angle at the structure location is typically 1 degree or less, meaning the transmission line is essentially a straight line. Very similar structures by appearance support the line at line angle (direction changes) up to about 30 degrees. A structure with more complex insulator assembles and heavier/stronger structures would be used when line angles are greater than 30 degrees.

500-KILOVOLT STEEL STRUCTURES

Lattice-steel structures, Figures 2, 3, 5, and 6 would be fabricated with galvanized steel members treated to produce a dulled galvanized finish. The average distance between 500kV structures, or span, would be 1,000 to 1, 800 feet (with an average span length of 1,500 feet) with occasional longer spans in rough terrain. Structure heights would vary depending on terrain and the requirement to maintain minimum conductor clearances from ground. The 500kV single-circuit structures would vary in height from 140 to 200 feet.

In general, single-circuit guyed lattice steel structures would be used in Wyoming, Colorado, and portions of Utah as tangent towers (in locations that have a line angle equal to or less than 1 degree) in flat to rolling terrain. In areas where terrain is rougher and in locations that have a line angle equal to or less than 1 degree, tangent towers would be self-supporting lattice steel structures. Self-supporting lattice steel towers would be used in all areas of the project where angles in the line would be greater than 1 degree.

H-frame steel structures, Figure 4, would be fabricated as tubular self-weathering steel treatment to produce a rust-like finish. The average distance between 500kV structures would be 1,200 to 1,300 feet. Structure heights would vary depending on terrain and the requirement to maintain minimum conductor clearances from ground. The 500kV single-circuit H-frame structures would vary in height from 110 to 165 feet.

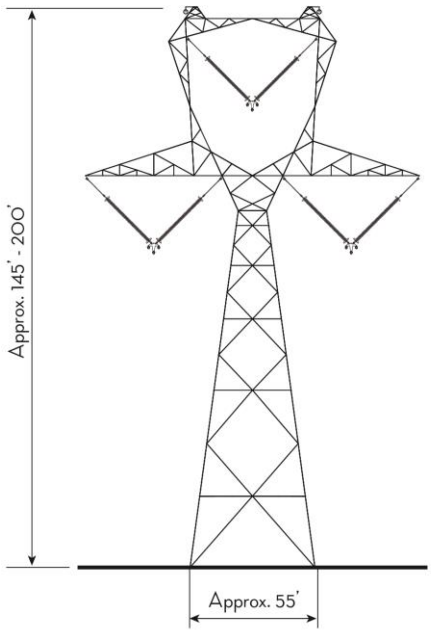

Figure 2 Proposed Tangent Single-circuit 500-kilovolt Lattice Steel Structure (Delta Configuration)

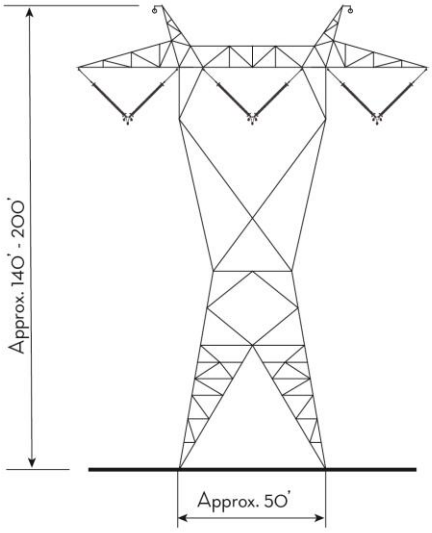

Figure 3 Alternate Proposed Single-circuit 500-kilovolt Lattice Steel Structure (Horizontal Configuration)

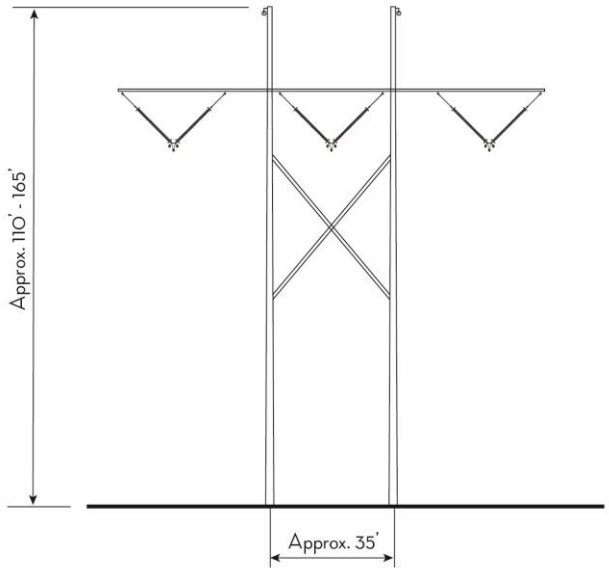

Figure 4 Proposed Tangent Single-circuit 500-kilovolt H-frame Structure

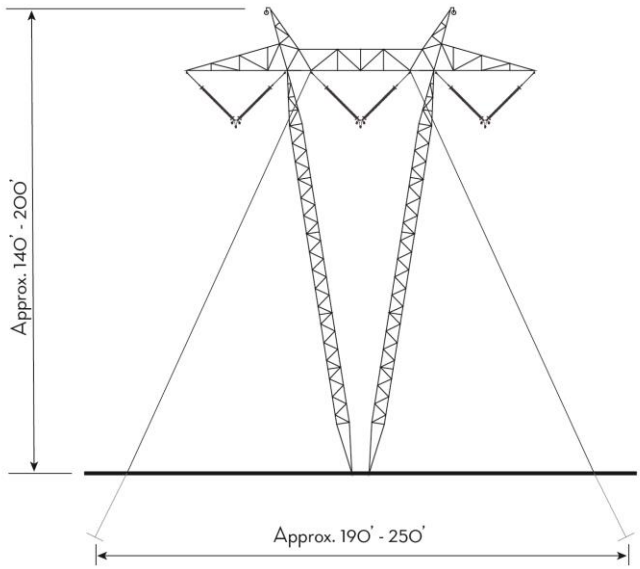

Figure 5 Proposed Guyed V

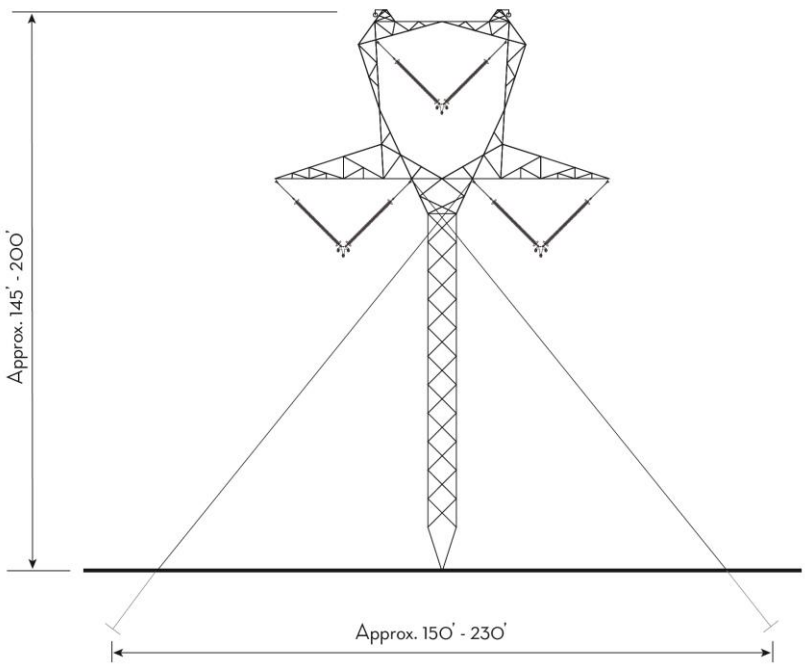

Figure 6 Proposed Guyed Delta

345-KILOVOLT STEEL STRUCTURES

The two existing and one proposed 345kV single-circuit transmission lines between the Clover and Mona substations (Segments 4a, 4b, and 4c) would use steel H-frame, steel mono-pole single circuit, and/or steel mono-pole double circuit 345kV structures (Figures 7, 8 and 9). PacifiCorp will relocate a small portion of the existing Bears Ears to Bonanza 346kV line outside the Raven Ridge ACEC in a manner as to also accommodate the GWS alignment outside the ACEC. Engineering details regarding structure types will be completed upon approval of a final route in the Record of Decision and right-of-way grant.

The 345kV structures would be steel H-frame, steel mono-pole single-circuit or steel mono-pole double-circuit structures depending on final design requirements. The steel H-frame structures would use self-weathering steel or a dulled galvanized steel finish. Weathering steel is manufactured from a group of steel alloys that were developed to eliminate the need for maintenance painting. This type of steel alloy forms a stable dark red-brown rust-like appearance after exposed to the weather for a few years. The average distance between H-frame structures would be approximately 800 to 1,200 feet. Typically, the 345kV single-circuit H-frame structures would have pole lengths ranging between 80 and 140 feet. Embedment depths are typically 10 percent of the pole length plus 5 feet, which in the case of this Project is expected to range between 13 and 19 feet.

The average span between single-circuit monopole structures would be approximately 700 to 800 feet. Structures would be set on a drilled-pier foundation. The structure heights above ground would vary from 85 to 130 feet.

The average distance between double-circuit monopole structures would be approximately 700 to 800 feet. Structures would be set on a drilled-pier foundation. The structure heights above ground would vary from 95 to 150 feet.

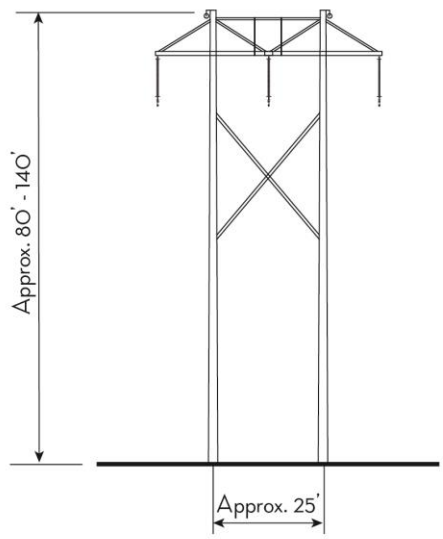

Figure 7 Proposed Tangent Single-circuit 345-kilovolt H-frame Structure

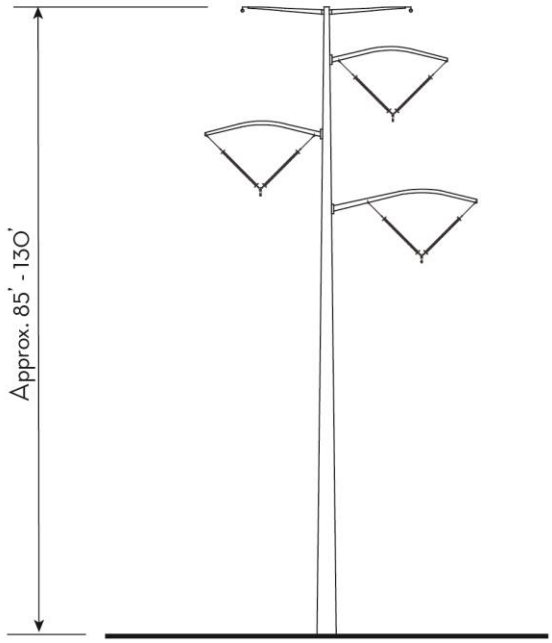

Figure 8 Proposed Single-circuit 345-kilovolt Mono-pole Tangent Structure (for angles 0°–5°)

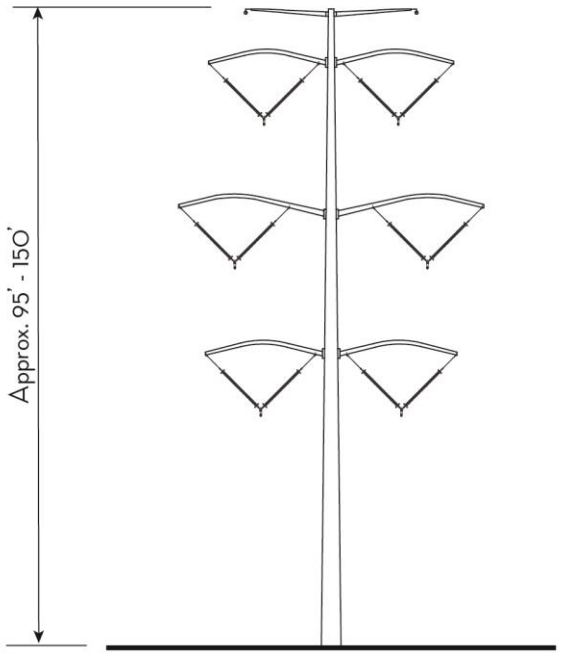

Figure 9 Proposed Double-circuit 345-kilovolt Mono-pole Tangent Structure (for angles 0°–5°)

2.1.2 Structure and Conductor Clearances

Conductor phase-to-phase and phase-to-ground clearance parameters are determined in accordance with the National Electrical Safety Code (NESC), ANSI C2, produced by the American National Standards Institute (ANSI) and are often supplemented by PacifiCorp's own standards that further address safety and performance criteria. The NESC code provides for minimum distances between the conductors and ground, crossing points of other lines and the transmission support structure and other conductors, and minimum working clearances for personnel during energized operation and maintenance activities (Institute of Electrical and Electronics Engineers [IEEE] 2007). Typically, the clearance of conductors above ground is no less than 35 feet for 500kV and no less than 30 feet for 345kV. During detailed design, clearances may be increased to account for localized and special conditions.

2.1.3 Structure Foundations

The 500kV single-circuit lattice-steel self-supported structures each require four foundations with one on each of the four corners of the lattice structures. The 500kV H-frame requires two foundations, one foundation for each tubular steel leg. The foundation diameter and depth for both steel-lattice and H-frame structures would be determined during final design and are dependent on the type of soil or rock present at each site; typical diameters and depths of foundation are shown in Table 1. Typically, the foundations for the self-supported single-circuit tangent lattice and H-frame structures would be composed of steel-reinforced concrete drilled piers.

Guyed V and Delta type structures require a single foundation located where the support legs meet the ground surface. Guyed V and Delta structures each require four guy anchors.

Table 1
Typical 500-kilovolt Structure Type Foundation

Structure Type	Number of Foundations /Anchors	Foundation Diameter (feet)	Foundation Depth (feet)	Area of All Foundations (square feet)
Tangent lattice (Delta Configuration)	4	4.0	21.0	52.0
Tangent lattice (Horizontal Configuration)	4	4.0	21.0	52.0
Small angle lattice	4	4.0	27.0	52.0
Medium angle lattice	4	4.0	30.0	52.0
Medium dead-end lattice	4	5.0	36.0	80.0
Heavy dead-end lattice	4	5.0	41.0	80.0
Tangent H-frame tubular steel	2	6.0	25.0	57.0
Angle H-frame tubular steel	2	7.0	30.0	77.0
Dead-end H-frame tubular steel	2	8.0	40.0	100.0
Guyed V	1/4	~5.0	~15.0	20.0
Guyed Delta	1/4	~5.0	~15.0	20.0

Depending on soil and tubular-steel structure type, the 345kV foundations would be either drilled-pier foundations or directly embedded. Typically, the tangent (no line angle change) 345kV single-circuit H-frame structures are directly embedded into the ground and do not require concrete foundations. The embedment depth is typically 10 percent of the pole length plus 5 feet. The diameter of the hole excavated for embedment is typically the pole diameter plus 18 inches. When a pole is placed in a hole, native or select backfill would be used to fill the voids around the perimeter of the hole.

Monopole 345kV single- and double-circuit structures would use a drilled-pier foundation. The foundation diameter and depth would be determined during final design and are dependent on the type of

soil or rock present at each specific site. Typical foundation diameters and depths for the single-circuit and double-circuit mono-pole structure families are shown in Table 2.

Table 2
Typical 345-kilovolt Structure Type Foundations

Structure Type	Number of Foundations	Foundation Diameter (feet)	Foundation Depth (feet)	Area of All Foundations (square feet)
Single Circuit				
Tangent H-frame	2	4.0	18.0	26.0
Tangent monopole	1	7.0	24.0	39.0
Small angle monopole	1	7.5	26.0	45.0
Medium dead-end lattice	1	4.0	20.0	13.0
Heavy dead-end lattice	1	4.0	25.0	13.0
Double Circuit				
Tangent monopole	1	8.5	32.0	57.0
Small angle monopole	1	9.0	34.0	64.0
Medium dead-end monopole	1	10.5	40.0	87.0
Heavy dead-end monopole	1	12.0	45.0	114.0

2.2 Conductors

2.2.1 Conductors for Segments 1, 2, and 3

The proposed conductor for the self-supported 500kV lines as well as the guyed steel 500kV lines is 1272 kcmil ACSR triple bundled "Bittern." For all 500kV lines, each phase of the three-phase circuit[2] would be composed of three sub-conductors in a triple bundle configuration. The triple-bundled configuration is proposed to provide adequate current carrying capacity and to provide for a reduction in audible noise and radio interference as compared to a single large-diameter conductor. Each 500 kV sub-conductor would have a 45/7 aluminum/steel stranding, with an overall conductor diameter of 1.345 inches and a weight of 1.432 pounds per foot and a nonspecular finish[3].

2.2.2 Conductors for Segments 4a and 4b

The proposed conductor for the 345 kV lines, (Segments 4a, and 4b) is 1,272 kcmil 45/7 ACSR “Bittern.” Each phase of the 345kV three-phase circuit would be composed of two sub-conductors. The individual 1,272 kcmil conductors would be bundled in a vertical configuration with spacing of 18 inches. The double-bundle configuration is proposed to provide adequate current carrying capacity and to provide for a reduction in audible noise and radio interference when compared to a single large-diameter conductor. Each 345kV conductor would have 45/7 aluminum/steel stranding, with an overall conductor diameter of 1.345 inches and a weight of 1.432 pounds per foot and a nonspecular finish.

2.2.3 Conductors for Segment4c

The proposed conductor for the relocated Mona – Huntington 345kV transmission line loop into Clover Substation (Segments 4c) is 954 kcmil 54/7 ACSR “Cardinal.” Each phase of the 345kV three-phase

[2] For transmission lines, a circuit consists of three phases. A phase may consist of one conductor or multiple conductors (i.e., sub-conductors) bundled together.
[3] Nonspecular finish refers to a “dull” finish rather than a “shiny” finish.

circuit would be composed of two sub-conductors in a double-bundle configuration. The individual 954 kcmil conductors would be bundled in a vertical configuration with spacing of 18 inches. The double-bundle configuration is proposed to provide adequate current carrying capacity and to provide for a reduction in audible noise and radio interference when compared to a single large-diameter conductor. Each 345kV conductor would have 54/7 aluminum/steel stranding, with an overall conductor diameter of 1.196 inches and a weight of 1.229 pounds per foot and a nonspecular finish.

2.3 Other Hardware

2.3.1 Insulators

As shown in Figures 2 through 9, insulator assemblies for both the 345kV and 500kV tangent structures would consist of two strings of insulators in the form of a "V" or a single string of insulators in the form of an "I." The V shaped configuration of the insulators restrains the conductor bundle from excessive swing into the structure in high winds allowing a more compact phase separation. The I-shaped configuration is hung vertically from the cross arm, arm, bridge or cross rope cable in the form of an "I" and is subject to higher swing angles in high winds than the "V." Dead-end insulator assemblies for both 345kV and 500kV lines would use an I-shaped configuration in the horizontal position on both the ahead and back span sides of the structure, which consists of insulators suspended from either a structure dead-end cross arm or bridge in the form of a horizontal "I." The conductor from the ahead and back span sides of the structure is connected from either of the horizontal I-shaped configuration, through an I-shaped configuration insulator or "jumper" in the vertical position, to the horizontal I-shaped configuration on the opposite side of the structure. Tangent structures utilize three (3) insulator assemblies where dead-end structures consist of nine (9) total I-shaped insulator strings: six (6) in the horizontal position and three (3) in the vertical position. Insulators would be composed of porcelain, toughened glass or polymer.

2.3.2 Grounding Systems

A grounding system would be installed at the base of each transmission structure that would consist of copper ground rods embedded into the ground in immediate proximity to the structure foundation and connected to the structure by a buried copper lead. When the resistance to ground for each transmission structure would be greater than 15 ohms with the use of ground rods, counterpoise would be installed to lower the resistance to 15 ohms or less. Counterpoise consists of a bare copper-clad or galvanized-steel cable buried a minimum of 12 inches deep, extending from structures (from one or more legs of structure) for approximately 200 feet within the right-of-way. During final design of the transmission line segments, appropriate electrical studies would be conducted to identify the issues associated with paralleling other facilities and the types of equipment that would need to be installed (if any) to mitigate the effects of the induced currents. In extremely rare situations where the soil conditions are nonresistant, the buried copper lead may need to be extended outside of the right-of-way. Coordination with the agencies would occur in these instances.

2.3.3 Minor Additional Hardware

In addition to the conductors, insulators, and overhead shield wires, other associated hardware would be installed on the structure as part of the insulator assembly to support the conductors and shield wires. This hardware would include clamps, shackles, links, plates, and various other pieces composed of galvanized steel and aluminum.

Other hardware that is not associated with the transmission of electricity may be installed as part of the Project. This hardware may include aerial marker spheres or aircraft warning lighting as required for the

conductors or structures per Federal Aviation Administration (FAA) regulations.[4] Structure proximity to airports and structure height are the determinants of whether FAA regulations would apply based on an assessment of wire/structure strike risk.

2.3.4 Potential for Cathodic Protection

When a high-voltage, alternating-current transmission line runs in parallel with a steel pipeline for a considerable length, significant voltages can be induced onto the pipeline. This alternating-current interference can result in damage to the pipeline coating and/or damage to the pipeline's wall. The Company's preference is to separate the proposed transmission line from the existing pipeline wherever possible. The Company and the applicable federal land-managing agency would work collaboratively to adjust the alignment to achieve an appropriate separation between existing pipelines and agency-preferred alternative route where needed, balancing the technical factors with sensitive environmental concerns.

Mitigative techniques can control induced voltages on an influenced pipeline and, for this existing condition of this project, the two mitigation techniques with most potential are as follows:

(1) Installation of parallel wires (zinc ribbons) bonded to the pipeline at regular intervals (to disperse the current away from the pipeline). As we understand it, installation of the ribbon requires excavation of a trench (approximately 24 inches wide and 36 inches deep) parallel to the pipeline. The zinc ribbon is laid in the trench and, at regular intervals, the zinc ribbon is attached to the pipeline. We understand that the surface disturbance associated with the trenching activities is about 11 feet wide. If there are multiple parallel pipelines in a corridor, a zinc ribbon would have to be installed for each. The zinc ribbon would have to be replaced approximately every 15 years.

(2) Locating the proposed transmission line to provide a greater separation between the existing pipeline and proposed transmission line. As an example, a separation distance of approximately 2,000 feet has been tentatively estimated by Questar Pipeline Company in the Uinta Basin area; however, determining the interference effects on the pipeline requires complex calculation of transmission line and pipeline electrical characteristics, electrical system parameters, and accurate representation of the soil structure (soil resistivity) to understand requirements for prudent separation. These studies would be conducted as the transmission line and access roads are designed and engineered.

As noted above, in order to avoid the additional surface disturbance associated with installation of the zinc ribbon, the preference is to separate the proposed transmission line from the existing pipeline.

2.4 Communications Systems

2.4.1 Optical Ground Wire

Reliable and secure communications for system control and monitoring of Gateway South is very important to maintain the operational integrity of the Project and of the overall interconnected system. Primary communications for relaying and control would be provided via the optical ground wire (OPGW), for the Company's operation of the transmission system, which would be installed on the transmission lines. For the 500kV transmission lines, a secondary communications path would be

[4] U.S. Department of Transportation, Federal Aviation Administration, Advisory Circular AC 70/7460-1K Obstruction Marking and Lighting, August 1, 2000; and Advisory Circular AC 70/7460-2K Proposed Construction or Alteration of Objects that May Affect the Navigable Airspace, March 1, 2000.

provided by the Company's existing microwave system, which is currently installed from the Central Wyoming area to existing substations in central Utah. A secondary communications path also may be developed using a power line carrier for the Company's operation of the transmission system. No new microwave sites are anticipated for the Project. Updated microwave equipment may be installed at existing sites and at the substations.

Each structure would have two lightning-protection shield wires installed on the peaks of each of the 500kV single-circuit lattice-steel and H-frame structures. On the 345-kV H-frame structures, these lightning-protection shield wires would be installed at the top of each pole. On both the 500kV and 345kV transmission lines where communication is required, one of the shield wires would be composed of extra-high-strength-steel wire with a diameter of 0.5 inch and a weight of 0.517 pound per foot. The second shield wire would be an OPGW constructed of aluminum and steel, which carries 48 glass fibers within its core. The OPGW would have a diameter of 0.64 inch and a weight of 0.375 pound per foot. The glass fibers inside the OPGW shield wire would provide optical data transfer capability among the Company's facilities along the fiber path for the Company's operation of the transmission system. The data transferred are required for system control and monitoring. On lines where communication is not required, both of the shield wires would be composed of the extra-high-strength steel wires. For Gateway South, all 500kV line segments would be designed to carry an OPGW. For the 345kV lines, Segment 4a would be designed to carry an OPGW.

2.4.2 Regeneration Stations

As the data signal is passed through the optical fiber cable, the signal degrades with distance. Consequently, signal regeneration stations are required to amplify the signals if the distance between substations or regeneration stations exceeds 55 miles. The exact locations cannot be determined at this time and would be based on the selected route.

A regeneration station may be housed within a substation control house in those cases where a substation is located along or near the final transmission route at an appropriate milepost. Otherwise, land must be obtained. Where a new site is required, the typical site would be 100 feet by 100 feet, with a fenced area of 75 feet by 75 feet. A 12-foot- by 32-foot- by 9-foot-tall building or equipment shelter (metal or concrete) would be placed on the site, and access roads to the site and power from the local electric distribution circuits would be required. An emergency generator with a liquid-petroleum-gas-fuel tank would be installed, in compliance with current regulations, at the site inside the fenced area. Two diverse communication cable routes (aerial and/or buried) from the transmission right-of-way to the equipment shelter would be required. Figure 10 illustrates the plan arrangement of a typical regeneration station.

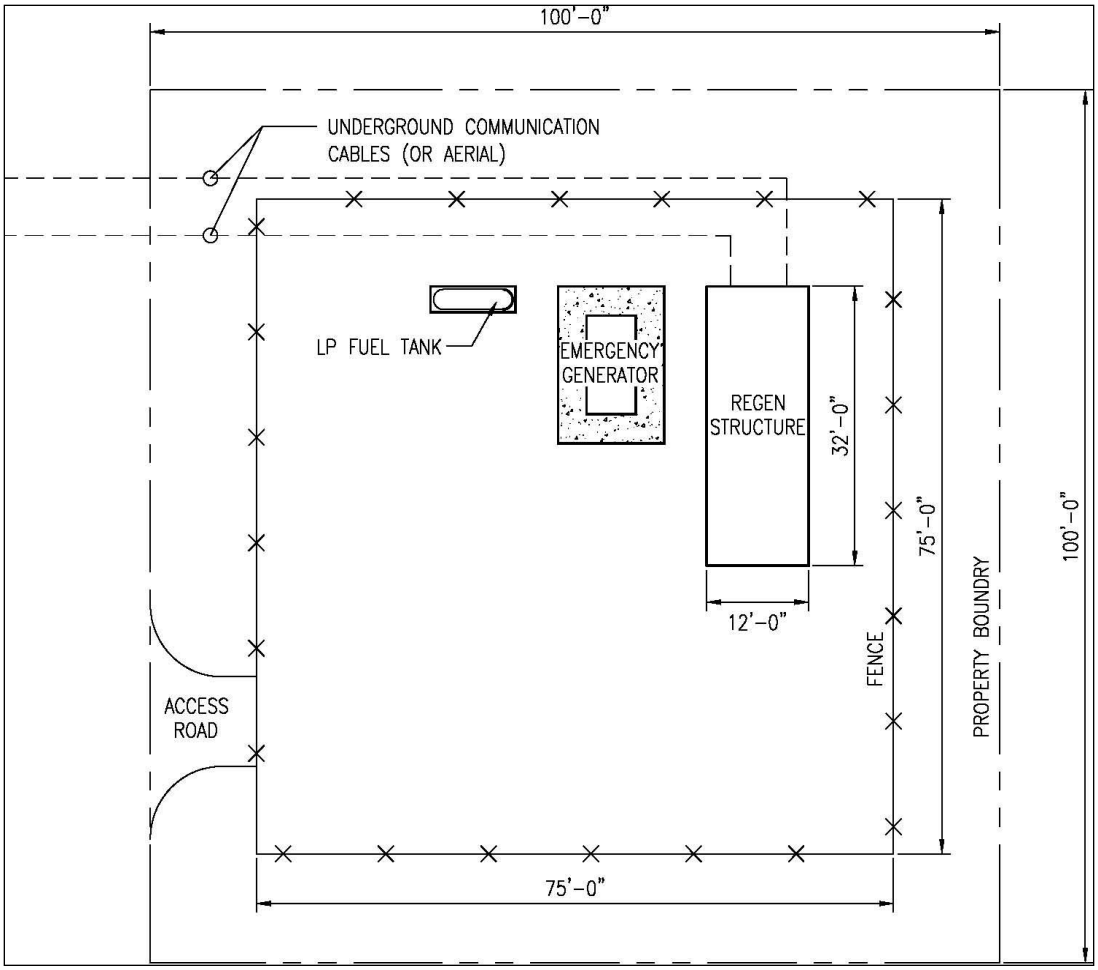

Figure 10 Typical Regeneration Station Site

2.5 Access to the Right of Way

Access to the right-of-way is an essential part of the construction and operation of the Project. Large foundation auger equipment, heavily loaded trucks, cranes, and specialized transmission-line construction equipment would be required for construction, maintenance, and emergency restoration activities. Annual ground-based inspections require vehicular access using four-wheel-drive trucks or four-wheel-drive all-terrain vehicles (ATVs) to each structure site. Section 4 (System Operation and Maintenance) describes in detail operational requirements.

During construction, vehicular access would be required to each structure. New access would be constructed and existing pathways widened as needed. Access not required after construction would be restored to the original condition or left as is, depending on landowner or land-management agency requirements.

Access construction employs heavy equipment including bulldozers, front-end loaders, dump trucks, water trucks, backhoes, excavators (both tracked and rubber-tired), and graders. Other specialized equipment, including boom trucks to install culverts in some areas, would be used where needed. Access would be built to provide a stable, permanent minimum 14-foot-wide travel surface. Depending on the

side slope, disturbance width would be larger than 14-feet and can include cuts and fills, crowning and ditching, at-grade water bars, and various kinds of water-body crossings.

The largest of the heavy equipment needed, which dictates the minimum-needed road dimensions, is a truck-mounted aerial-lift crane 100,000 pounds gross-vehicle-weight eight-wheel-drive, 210-foot telescoped boom. Vehicle width is 8feet 6 inches (102 inches) or less and wheelbase is approximately 40 feet. To accommodate this equipment, the road specifications require a minimum 14-foot-wide road top (travel way) with minimum 16- to 22-foot-wide road width in turns. The required access disturbance area and travel way in areas of rolling to hilly terrain would require a wider disturbance to account for cuts and fills, or where vehicles are required to pass one another while traveling in opposite directions.

During routine operations (by four-wheel-drive truck and ATVs), vehicular access would be needed to each structure for periodic inspections and maintenance and to areas of forest or tall shrubs to control vegetation in the right-of-way for safe operation. In an emergency (i.e., in the event of a structure or conductor failure) full emergency access, including cranes and other heavy equipment, would be needed. Based on historical reliability of lattice structures and conductors, it is anticipated that only a small fraction of the structure sites would require emergency access over the life of the Project.

Following are access types anticipated to be used and or developed for the Project. The Company's typical water-body crossings standards are included as Attachment A of this appendix, Rocky Mountain Power's Transmission Construction Standard TA501.

Existing Roads – No Improvement: The Existing Roads – No improvement access-road type includes existing paved or all weather surfaced roads that meet the Company's construction road standards. The Company's construction-road standards include the use of a minimum travel surface width of 14 feet and require a travel-surface width of up to 22 feet depending on the radius of curves.

The Existing Roads - No Improvement access-road type includes existing maintained paved or all-weather surfaced roads that are able to be used in their current condition. The use of the term 'No-Improvement' is intended to signify that no additional new disturbance would be created outside of an established disturbed area. As such, the Existing Roads - No Improvement access-road type could include regular maintenance to make the road passable for construction. Regular maintenance could include, but is not limited to, minor blading activities, repair of washed out areas, wash-boarded areas, depressions requiring graveling, approach installation, and other minor improvements.

Existing Roads – Improvements Required: The Existing Roads - Improvements Required access-road type includes existing roads that require improvements to meet the Company's construction-road standards. The Existing Roads - Improvements Required access-road type includes existing roads that may require widening to a minimum 14 foot travel-surface width to meet the Company's construction-road standards. In areas of steep terrain, the road travel-surface width could be a maximum of 22 feet to meet the Company's construction-road standards, depending on radius of curves and the slope of the terrain. As a result, total disturbance has the potential to exceed 22 feet, depending on the slope of the terrain. Disturbed areas, as a result of cut-and-fill slopes, would exceed the travel-surface width in areas of steep terrain.

Improvements to this access-road type could include, but are not limited to, blading to create a road to meet the Company's construction-road standards, cut-and-fill activities, re-establishing drainage features, tree removal, boulder and rock removal, bridge and culvert construction, installation of wash crossings, and other improvements to provide an adequate surface to support construction and maintenance vehicles.

Improvements to this access-road type may require reclamation to preconstruction conditions as determined by the land-management agency requirements or landowner requirements.

New Roads - Bladed: The New Roads – Bladed access-road type includes the construction of new permanent access roads where existing roads do not exist with the purpose of allowing for access to the Project right-of-way. New bladed access roads would be constructed to meet the Company's construction-road standards. The Company's road-construction standards include constructing a minimum travel-surface width of 14 feet. In areas of steep terrain, the road travel-surface width could be a maximum of 22 feet to meet the Company's construction-road standards, depending on radius of curves and the slope of the terrain. As a result, total disturbance has the potential to exceed 22 feet, depending on the slope of terrain. Disturbed areas, as a result of cut-and-fill slopes, would exceed the travel-surface width in areas of steep terrain.

New Roads – Overland Travel: The New Roads – Overland Travel access-road type includes new permanent access routes that would use Overland Travel with the purpose of allowing for access to the Project right-of-way. It is intended that Overland Travel access is used in areas where access can be attained without construction of roads according to the Company's access road standards. As such, overland travel would be used in areas of relatively flat topography. The result would be an access route that eventually would become a two-track trail or naturally revegetate completely, but still allow the Company's access without grading after construction.

Overland travel comprises the following two different methods:

- **Drive and Crush**, which is vehicular travel to access a site without significantly modifying the terrain. Vegetation is crushed, but not cropped, soil is compacted but no surface soil is removed. Even though vegetation may be damaged or destroyed, this creates vertical mulch on the surface soil and leaves the seed bank in place. Crushed vegetation would likely resprout after temporary use is stopped. A dozer, grader, or other type of equipment may be used to move boulders or other obstructions that prevent overland travel. Additionally, minor areas where the planned access crosses a side slope that exceeds the allowable slope for access by construction or maintenance vehicles, may be graded to provide safe passage. The disturbed area would be blended, to the extent practicable, into the existing grades and revegetated according to the prescribed mitigations.

- **Clear and Cut**, which is considered as above-grade removal of vegetation in order to improve or provide suitable access for equipment. All vegetation is removed using above-grade cutting methods that leave the root crown intact. Soils are compacted, but no surface soil is removed. A dozer, grader, or other type of equipment may be used to move boulders or other obstructions that prevent overland travel. Additionally, minor areas where the planned access crosses a side slope that exceeds the allowable slope for access by construction or maintenance vehicles, may be graded to provide safe passage. The disturbed area would be blended, to the extent practicable, into the existing grades and revegetated according to the prescribed mitigations.

Temporary Roads: The Temporary Roads access-road type is the temporary construction or use of roads to access a site and can include existing trails or two-track roads or overland travel access to support the construction of the Project and access the Project right-of-way. This access-road type may not require construction to meet the Company's road-construction standards. However, this access road type would be constructed to provide a safe travel way and, as such, temporary disturbance could result. Temporary disturbance would be dictated by the underlying ground conditions, but disturbance could range from significant, such as blading/cut and fill activities, to minor, such as overland travel.

Unless otherwise noted by the land-management agency or landowner, this access-road type requires reclamation, to the extent practicable, to preconstruction conditions.

2.6 Series Compensation Substations

As mentioned in Section 1.2 of this appendix, two series compensation substations are planned. They are required to improve the transport capacity and efficiency of the transmission line. Locations for the stations have not been identified, as of the date of this Draft EIS; however, they would be located approximately one-third (Series Compensation Station No. 1) and two-thirds (Series Compensation Station No. 2) of the distance from the Aeolus Substation to the Clover Substation. The Company's preference is to site each series compensation station in-line with the transmission line. However, if directly routing the line through the station is precluded because of potential conflict with station site requirements, land use(s), or sensitive environmental resource, the line would diverge from centerline (but remain within a 4-mile-wide area) to provide a connection into and out of the series compensation station.

The following sections describe key components of series compensation substations.

2.6.1 Bay

A substation "bay" is the physical location within a substation fenced area where the high-voltage circuit breakers and associated steel transmission line termination structures, high-voltage switches, bus supports, controls, and other equipment are installed. For the 500kV transmission line, circuit breakers, high-voltage switches, bus supports, and transmission line termination structures typically would be installed. The tallest structures in the substations would be the 500kV dead-end structures, which vary in height from approximately 70 to 135 feet, and/or a microwave antenna tower, which would be 100 feet or more depending on the height needed to maintain line of sight to the nearest microwave relay site. Additional equipment including 500kV transformers and 500kV shunt reactors (which resemble a transformer in appearance), and 500kV shunt-capacitor banks would be installed.

Figure 11 is a perspective sketch illustrating the appearance of a typical 500kV substation with multiple line connections.

2.6.2 Access Road

Permanent all-weather access roads are required at the series compensation substation sites to provide access for personnel, material deliveries, vehicles, trucks, heavy equipment, low-boy tractor trailer rigs (used for moving large transformers), and ongoing maintenance activities at each site. Substation access roads are normally well-compacted, graded gravel roads approximately 20 feet wide with a minimum 110-foot turning radius to accommodate the delivery of large transformers to the site. New access roads would be developed from public roads to the two series compensation substations.

2.6.3 Control Building

One or more control buildings are required at each substation to house protective relays, control devices, battery banks for primary control power, and remote monitoring equipment. The size and construction of the building depends on individual substation requirements. Typically, the control building would be constructed of concrete block, pre-engineered metal sheathed, or composite surfaced materials. Special control buildings may be developed within the series compensation substation developments to house other control and protection equipment.

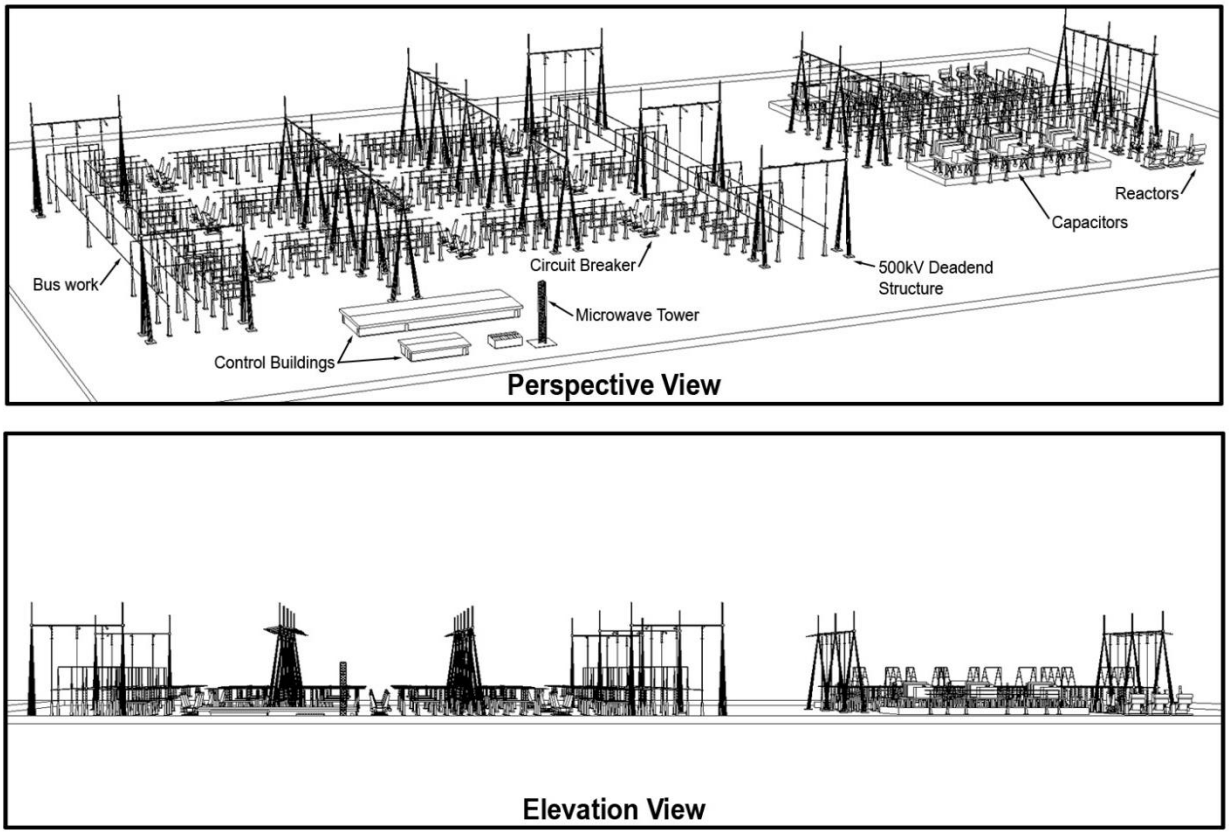

Figure 11 Typical 500-kilovolt Substation

2.6.4 Fencing

Security fencing would be installed around the entire perimeter of each series compensation substation to protect sensitive equipment and prevent accidental contact with energized conductors by third parties. This 7-foot-high fence would be constructed of chain link with steel posts, with 1 foot of barbed wire above the chain link and with locked gates.

2.6.5 Distribution Supply Lines

Station-service power would be required at each substation or regeneration station. Typically, station-service power is provided from a local electric distribution line, located in proximity to the substation or regeneration station. The voltage of the distribution supply line is typically 34.5kV or lower and carried on wood poles. For all new substations sites, it would be necessary to extend the electric distribution line from a suitable take-off point on the existing distribution line to the new Gateway South substation site or regeneration station. The location and routing of the existing distribution lines to the new substation sites would be determined during the final design process. Modifications to the existing distribution facilities may be necessary to provide increased capacity to support the expansions at the existing substation sites.

3 SYSTEM CONSTRUCTION

The following section and subsections describe land requirements and construction activities for the Project, including transmission line, series compensation substations, communication, and associated ancillary features.

All construction would be completed in accordance with the Project Construction Plan of Development (POD), which would be required as a condition of any federal land-use authorization (e.g., right-of-way grant, special-use permit, license agreement). The stipulation that the Construction POD should be completed prior to the issuance of a Notice to Proceed would be incorporated into such land-use authorization. The Construction POD will include such documents as:

- Traffic and Transportation Management Plan
- Stormwater Pollution Prevention Plan Framework
- Spill Prevention, Containment, and Countermeasures Plan Framework
- Historic Property Treatment Plan
- Blasting Plan Framework
- Plant and Wildlife Species Conservation Measures Plan
- Erosion, Dust Control, and Air Quality Plan
- Hazardous Materials Management Plan Framework
- Emergency Preparedness and Response Plan Framework
- Noxious Weed Management Plan
- Fire Protection Plan
- Stream, Wetland, Well, and Spring Protection Plan
- Paleontological Resources Treatment Plan
- Reclamation, Revegetation, and Monitoring Framework Plan

The Construction POD also will include more detailed descriptions of construction activities and requirements.

3.1 Land Requirements and Disturbance

3.1.1 Right-of-Way Width

The Company proposes to acquire a permanent 250-foot-wide right-of-way for the 500kV single-circuit sections of the Project, and a 150-foot-wide right-of-way for the 345kV single-circuit Segment 4c of the Project. Segments 4a and 4b would be in existing right-of-way. The determination of these widths is based on two criteria:

- Sufficient clearance in the span between support structures to obstacles outside the right-of-way must be maintained during a high wind event when the conductors are blown towards the right-of-way edge.

- Sufficient room must be provided within the right-of-way at the support structures to perform transmission line maintenance. See Subsection 4.1 of this document for details of maintenance requirements.

During construction, temporary permission and/or right-of-way would be required from landowners and land-management agencies during construction of temporary components of the Project such as multi-purpose construction yards and helicopter fly yards. During operation, Project land requirements would be restricted to the right-of-way, access roads, series compensation substations, and communication facilities. Access to the right-of-way would be in accordance with the land rights obtained as part of the grant or easement acquisition process. As further details of the final Project design are engineered, the amount of land required may change.

3.1.2 Right-of-Way Acquisition

Rights-of-way for transmission line facilities on private lands would be obtained as perpetual easements. Land for series compensation substations or regeneration stations would be obtained in fee simple where located on private land. Every effort would be made to purchase the land and/or obtain easements on private lands through reasonable negotiations with the landowners. All negotiations with landowners would be conducted in good faith, and the Project's effect on the parcel or any other concerns the landowner may have would be addressed.

In order to achieve the capacity needed to serve present and future loads within the Company's service areas, the North American Electricity Reliability Corporation (NERC) and Western Electricity Coordinating Council (WECC) reliability standards require minimum separation from existing transmission lines that serve substantially the same load as that served by each of the new Gateway South transmission segments. In these cases, it is the Company's minimum separation guideline that the Gateway South transmission line be located at least 250 feet from the nearest existing 230kV or higher-voltage transmission lines or at least 300 feet from planned high-voltage transmission lines. Land between rights-of-way that are separated to meet reliability criteria would not be encumbered with an easement, but could be limited in some land uses due to the proximity of two or more large transmission lines.

3.1.3 Land Disturbance

Table 3 includes disturbance dimensions of land from construction and operation activities for the Project.

Table 3
Summary of Land Disturbance Required for Construction and Operation of the 500- and 345-kilovolt Transmission Lines

Feature	Description
500kV Transmission Line	
Line length	Approximately 400 to 540 miles (depending on route selected)
Span length	Self-supporting steel-lattice 1,000 to 1,500 feet
	H-frame 1,200 to 1,300 feet
	Guyed steel-lattice 1,000 to 1,800 feet
Structures per mile	Self-supporting steel-lattice approximately 4 to 5
	H-frame approximately 4
	Guyed steel-lattice approximately 3 to 4
Right-of-way width	250 feet
Land Temporarily Disturbed	
Structure work area	250 by 250 feet per structure
Wire-pulling/tensioning	250 by 400 feet; two every 3 to 5 miles

Table 3 Summary of Land Disturbance Required for Construction and Operation of the 500- and 345-kilovolt Transmission Lines	
Feature	**Description**
Splicing sites	100 by 100 feet every 9,000 feet
Guard structures	150 by 75 feet; approximately 1.4 structures per 1 mile
Multi-purpose construction yards	30-acre site located approximately every 20 miles on private and/or public land (locations to be determined) [1]
Helicopter fly yards	15-acre site located approximately every 5 miles[2]
Access roads (improve existing, spur, and new)	Improve existing, spur, and new roads would be a minimum of 14-foot-wide travel surface (in steeper terrain the travel surface width could be a maximum of 22 feet for radius of curves) plus disturbance for grading and drainage features (total distance to be determined)
Land Permanently Required	
Area occupied by structure (pad)	0.08 acre per structure (guyed and self-supporting)
Series compensation stations	Two at 160 acres each
Communication regeneration station	100 by 100 feet with 75- by 75-foot fenced areas and a 12- by 32-foot building; one station approximately every 55 miles
Access roads (improve existing, spur, and new)	Improved existing, spur, and new roads would typically have a 14-foot-wide travel surface (in steeper terrain the travel surface width could be a maximum of 22 feet for radius of curves) plus disturbance for grading and drainage features (total distance to be determined)
345kV Transmission Lines[3]	
Line lengths	Three segments totaling approximately 6.6 miles
Span length	H-frame 800 to 1,200 feet
	Single- and double-circuit mono-pole – 700 to 800 feet
Structures per mile	H-frame approximately 4 to 7 per mile
	Single- and double-circuit mono-pole approximately 6 to 8 per mile
Right-of-way width	Segments 4a and 4b on existing right-of-way, Segment 4c 150 feet
Land Temporarily Disturbed	
Structure work area	150 by 200 feet per structure
Wire-pulling/tensioning	150 by 400 feet; one site per 345kV segment
Splicing site	100 by 100 feet; one site for segments 4a and 4b
Guard structures	150 by 75 feet approximately 1.4 structures per 1 mile
Multi-purpose construction yards	10-acre site; one site located near Clover Substation
Helicopter fly yard	15-acre site located near Clover Substation (location to be determined)[2]
Access roads (improve existing, spur, and new)	Improve existing, spur, and new roads would be 14 feet wide
Land Permanently Required	
Area occupied by structure (pad)	5 by 40 feet per structure (H-frame)
Access roads (improve existing, spur, and new)	Improve existing, spur, and new roads would be 14 feet wide

NOTES:
[1]Multi-purpose construction yards include concrete batch plants, which would occur approximately every 60 miles except in areas where the Project could be serviced by existing concrete batch plants. Helicopter landing and refueling also would occur in the multi-purpose construction yards.
[2]Helicopter fly yards, which are used to transport materials to structure work areas during construction, also may include space dedicated for refueling helicopters.
[3] Engineering details regarding the relocation and structure types will be completed upon approval of a final route in the Record of Decision and right-of-way grant.

3.2 Transmission Line Construction

The following sections describe the transmission-line construction activities and procedures for Gateway South. Figure 12 illustrates the transmission line construction sequence. Substation construction is described in Subsection 2.4 of this appendix. Various construction activities would occur during the construction process, with several construction crews operating simultaneously at different locations on three transmission line segments (spreads).

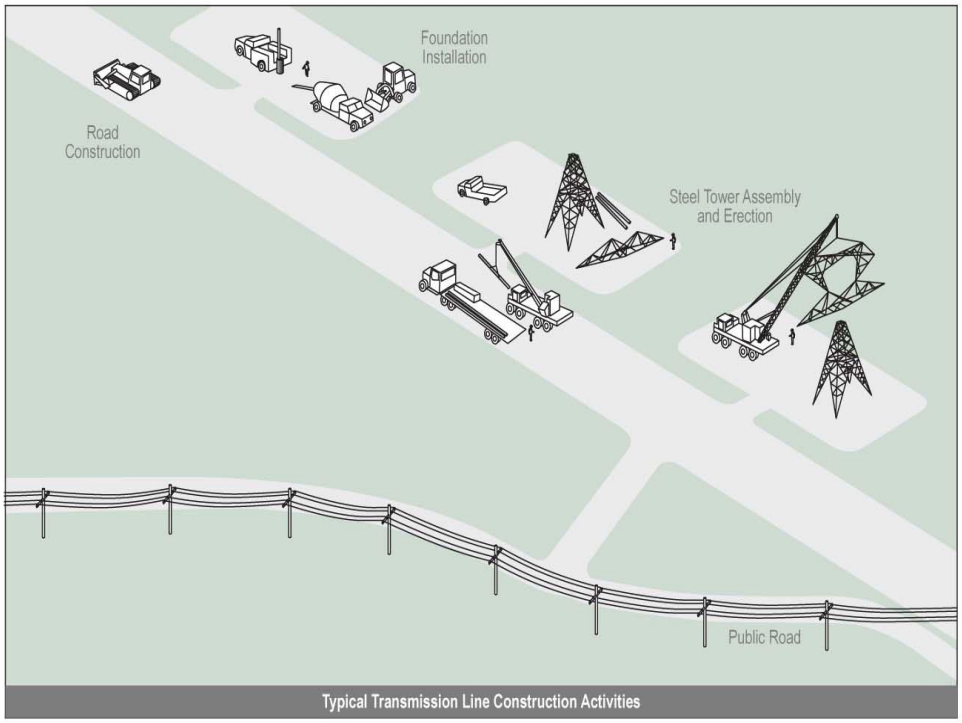

Figure 12 Transmission Line Construction Sequence

Approximately 400 to 540 miles (depending on alternative route selected) of 500kV transmission lines and associated support structures would be constructed, between Aeolus Substation and Clover Substation. Less than 10 miles of three segments (Segments 4a, 4b, and 4c) would be 345kV construction between the Clover and Mona substations.

3.2.1 Transmission Line System Access

Construction of the 500kV and 345kV transmission lines would require vehicle, truck, and crane access to each new structure site for construction crews, materials, and equipment. Similarly, construction of other Project components such as staging yards and substation sites would require vehicle access.

Transmission line right-of-way access would be a combination of new access, improvements to existing access, and use of existing access as is. New access or improvements to existing access would be constructed using a bulldozer or grader, followed by a roller to compact and smooth the ground. Front-end loaders would be used to move the soil locally or off site. Typically, access to the transmission line right-of-way and structure sites requires a 14-foot-wide travel way for straight sections and a 16- to 22-foot-wide travel way at curves to facilitate safe movement of equipment and vehicles. However, in certain areas, access widths through curves may exceed 22 feet. Wherever possible, new access would be

constructed within the proposed transmission line right-of-way, or existing access would be used. In other cases, access would be required between the proposed transmission line and existing access. Erosion control and sedimentation measures such as crossroad drainage, at-grade water bars, culverts, sediment basins, or perimeter control would be installed as required to minimize erosion during and subsequent to construction of the Project.

After Project construction, existing and new permanent access would be used by maintenance crews and vehicles for inspection and maintenance activities. New access created to construct structures would be revegetated only. Temporary construction access not required for future maintenance would be restored after completion of Project construction. For example, access to multi-purpose yards (see description below) would not be required once the yard is regraded and vegetated. Gates (or other barriers) would be installed as required to restrict unauthorized vehicular access to the right-of-way. Access retained for operations would be seeded with a seed mix required by the agencies and allowed to revegetate. For normal maintenance activities, an 8-foot-wide portion of access would be used and vehicles would drive over the vegetation. For nonroutine maintenance requiring access by larger vehicles, the full width of the access may be used. Access areas would be repaired, as necessary, but not be routinely graded. Vegetation (e.g., taller shrubs and trees) that may interfere with the safe operation of equipment would be managed on a cyclical basis.

3.2.2 Geotechnical Investigations within the Right-of-way

The purpose of the geotechnical investigation is to perform tests and collect samples to aid in preparation of soil parameters to be used in the final design of structure foundations. This activity is necessary help ensure the system is designed and constructed to be safe, reliable, cost efficient, and can reduce the overall temporary and permanent land disturbance within the right-of-way during initial build and the life of the Project.

The geotechnical investigations would consist of the drilling and sampling of soils to a typical depth of 50 to 60 feet below the existing ground. The borehole depth may exceed 60 feet if soil conditions indicate. The boreholes would have a diameter of approximately 8 inches and typically would be backfilled with auger cuttings and on-site soils. Access roads and overland access routes as designed for the final right-of-way grant would be used exclusively.

Helicopter and/or manually transported drill rigs may be used for geotechnical exploration in areas where existing roads do not provide adequate access or where overland travel is prohibited. Geophysical exploration techniques would be employed to assist in subsurface characterization. Geophysical techniques cannot replace drilling. One form of geophysical testing, refraction microtremor (ReMi) uses instrumentation combined with surface actuation to identify subsurface soil and rock stratification. The actuation can be low impact, such as a person jumping up and down. However, a larger actuation, such as that produced by a hammer striking a steel plate lying on the ground, provides more detail in the testing.

The geotechnical investigation would be conducted at both substation/series compensation locations and along the transmission line right-of-way. A description of activities is provided below broken down by facility and type of drilling to accomplish the geotechnical investigation.

The geotechnical exploration program for the transmission line planned according to the Company's standard TA 071. Explorations are specified at all planned angle points and dead-ends, intervals not to exceed 3 miles in long tangent sections of the line, and any additional locations needed to address areas of concern identified in the Geotechnical Desktop Report. The geotechnical exploration for this Project is anticipated to consist of site examinations, access to the bore site by a drill rig and support vehicles, geotechnical drilling, down-hole geotechnical testing, select geophysical surveys, and laboratory testing. In general, drilling depths are anticipated to be 50 to 60 feet. If competent bedrock is encountered, coring would be advanced 5 to 15 feet into competent rock. Access to the boreholes would be made along routes selected and analyzed in the Project EIS. All disturbance associated with the geotechnical exploration program is to be contained completely within the area analyzed for disturbance associated with the transmission line construction.

GEOTECHNICAL DRILLING ACTIVITIES

Anticipated drilling methods to accomplish the exploration depths described above include the following.

Hollow Stem Auger Drilling

Auger drilling consists of rotating a hollow drill stem to advance a toothed bit into the subsurface materials. The materials are brought up from the borehole by the rotation of a continuous helical fin on the outside of the drill stem. The drill stem is added in pieces (flights) as the boring advances downward. This is a dry method of drilling that typically requires no water, drilling mud, or pressurized air as a circulating fluid. The support equipment for auger drilling includes a water truck, either truck or track mounted, and the geologist/engineer's vehicle.

Mud Rotary Drilling

Mud rotary drilling consists of rotating a smooth-walled hollow drill stem and advancing a variety of drill bits at the end of the drill stem. The materials are brought up from the borehole by pumped water, typically travelling down through the drill stem, out the bit, and flowing up the outside of the drill stem. The drilling mud and/or water pumped through the rods carries drill cuttings to the ground surface. A tub at the surface collects the drill cuttings and holds the water for recirculation. The equipment for mud rotary drilling includes the drill rig, a support vehicle for rods and equipment, a water truck, and the geologist/engineer's vehicle.

Air Rotary Drilling

The air rotary drilling method is similar in principle to mud rotary drilling. However, this method uses compressed air as the circulating medium rather than water or mud slurry. Drill cuttings are retrieved from under a hood placed over the borehole or a cyclone. A special type of air rotary drilling involves the use of an air hammer. Compressed air is pumped through the drill pipe to an air hammer bit in the borehole. The pneumatic bit strikes the rock very rapidly. The equipment for air rotary drilling includes the drill, a support vehicle with drilling steel towing an air compressor, and the geologist/engineer's vehicle.

Sonic Drilling

Sonic drilling uses a rotating drill string as with other drilling methods; however, this method uses a sonic drill head to impart a high-frequency vibration on the drill stem and open pipe casing/core barrel that is advanced into the subsurface materials. As the casing is advanced, soil and rock samples are forced up into the casing, providing a continuous sample of the subsurface soil and rock. The frequency of vibration can be changed to match the subsurface conditions, making this type of drilling generally faster than the other drilling methods. Sonic drills are normally mounted on larger transport vehicles. The support equipment for sonic drilling included a vehicle to carry the drill, a support vehicle for rods, and the geologist/engineer's vehicle.

Under-Reamer Type Drilling (ODEX System)

The under-reamer drilling method uses tooling in which an outer drill casing is advanced along with the drill bit (more or less simultaneously, depending on the manufacturer). The drill bit has a section that moves outward through eccentric action when the drill rods are rotated, thereby making the borehole larger than the casing. The larger-diameter hole allows the casing to follow along behind the bit by being hammered or pushed as the hole is drilled. The bit is typically a tungsten carbide button bit that is driven by a percussion air hammer during rotation. A common name for this type of drilling is ODEX, which is an acronym for overburden drilling with eccentric bit. Drill cuttings are removed by compressed air travelling down the drill rod to the bit and returning via the annulus between the drill rod and casing lifting the cuttings to the surface. The air path can be reversed similar to the method used by reverse circulation drilling. The support equipment for under-reaming drilling includes an air compressor, a support vehicle to carry casing, and the geologist/ engineer's vehicle.

Cone Penetration Test Drilling

The cone penetration test (CPT) is a testing method used to determine the engineering properties of soils and delineate soil lithology. The test method consists of pushing an instrumented cone at a constant rate. The instruments measure tip (cone) resistance and friction resistance along the sides. The CPT delineates soil layers from the ratio of cone to side friction resistance. CPT drilling provides excellent geotechnical information in softer formations but typically reaches refusal in soils with gravel, medium dense sands or hard fine grained soils. The CPT drill typically is mounted in a box truck or on a track/all-terrain rig. The support equipment for CPT drilling includes a support truck for equipment, and the geologist/engineer's vehicle.

Drilling Rig Types

The drilling equipment described above is commonly mounted on road-legal two-wheel-drive and four-wheel-drive trucks, tracked vehicles, an oversized-tire ATV, or on platform rigs. Platform rigs can be transported in pieces to the site via helicopter. Additionally, a man-portable drill rig may be used where access is not available. This rig type is transported, in pieces, as closely as possible to the borehole site using road-legal vehicles or off-highway vehicles. The pieces are packed into the site by personnel or livestock and assembled on site to perform the drilling. The type of drilling rig used is dependent on the access difficulties to the borehole location and the sampling methods required. Other vehicles and equipment normally mobilized to each boring location may include a water truck and/or support vehicle, large air compressor, geologist's pickup truck or utility vehicle, and possibly another support truck. In some areas, earthwork equipment may be required to assist with access to the boring location. Tracked support vehicles including the water truck may be required. The drilling subcontractor must be equipped to provide drilling vehicles as demanded by access requirements and the terrain.

3.2.3 Multi-purpose Yards

Construction of Gateway South would begin with the establishment of multi-purpose yards along the Project alignment. The multi-purpose yards would serve as field offices; reporting locations for workers; parking space for vehicles and equipment; and sites for material storage, fabrication assembly, concrete batch plants, and stations for equipment maintenance. The yards, about 30 acres each for 500kV transmission-line construction and one 10-acre site in the Clover Substation area for 345kV transmission-line construction, would be located near each end of each segment of the transmission-line right-of-way, and approximately every 20 miles along the route. Additionally, helicopter fly yards for helicopter operations would be located approximately every 5 miles along the route where helicopter construction is planned, and would occupy approximately 15 acres each. Lighting would be the minimum required to meet safety and security standards.

Multi-purpose yards and helicopter fly yards may be fenced, have locked gates and may have security guards stationed where needed. Yard locations would be finalized following discussion with the land-management agency or negotiations with landowners. In some areas, the multi-purpose yards may need to be scraped by a bulldozer and a temporary layer of rock laid to provide an all-weather surface. Unless otherwise directed by the land-management agency or landowner, the rock would be removed from the yards upon completion of construction and the area would be restored.

Typically, helicopter fly yards would be located in relatively flat areas with easy, existing access to minimize site grading and new road construction. When possible, these areas would be located in previously disturbed sites or in areas of minimal vegetative cover.

3.2.4 Site Preparation

Individual structure work areas would be cleared to install the transmission-line support structures and facilitate access for future transmission line and structure maintenance. Clearing of individual structure work areas would be required to install the structures. Clearing individual structure sites would be done using a bulldozer to blade the required area, and to the extent practical, blading of native plant communities would be minimized. At each single-circuit 500kV structure location, an area approximately 250 feet by 250 feet would be needed for construction laydown, structure assembly, and erection at each structure site, depending on slope. An area approximately 150 feet by 200 feet would be required for 345kV structure locations. This area would provide a safe working space for placing equipment, vehicles, and materials. For all structure types, the structure work area would be cleared of vegetation only to the extent necessary and any removal of topsoil would be stockpiled and stabilized to limit erosion. After construction, all areas not needed for normal transmission line maintenance, including fire and personnel safety clearance areas, would be graded to blend as near as possible with the natural contours, topsoil replaced, then revegetated as required.

Additional equipment may be required if solid rock is encountered at a structure location. Rock-hauling, hammering, or blasting may be required to remove the rock. Excess rock that is too large in size or volume to be spread at the individual structure sites would be hauled away and disposed of at approved locations or at a location specified by the landowner.

3.2.5 Install Structure Foundations

Each 345kV H-frame typically would require the poles be directly embedded in the ground. Holes would be drilled in the ground using a truck- or track-mounted auger. When the pole is placed in the hole, native or select backfill would be used to fill the voids around the perimeter of the hole. When backfill must be

imported, material would be obtained from commercial sources or from areas free of noxious weed species. Similarly, where solid rock is encountered, blasting may be required.

Each 345kV mono-pole support structure and 500kV steel H-frame structure would require the installation of foundations, which typically are drilled concrete piers. The holes would be drilled using truck- or track-mounted augers of various sizes depending on the diameter and depth requirements of the hole to be drilled. Each foundation would extend approximately 2 feet above the ground level.

Where solid rock is encountered, blasting, rock hauling, or the use of a rock anchoring or micro-pile system may be required. Micro-piles are high capacity, small diameter (5-inch to 12-inch) drilled and grouted in-place piles designed with steel reinforcement to primarily resist structural loading. The rock anchoring or micro-pile system would be used in areas where site access is limited or adjacent structures could be damaged as a result of blasting or rock-hauling activities.

In environmentally sensitive areas with very soft soils, additional equipment such as a HydroVac, which uses water pressure and a vacuum, may be used to excavate material into a storage tank. Alternatively, a temporary casing may be used during drilling to hold the excavation open, after which the casing is withdrawn as the concrete is placed in the hole. In areas where it is not possible to operate large drilling equipment due to access or environmental constraints, hand digging may be required.

Reinforced steel anchor-bolt cages would be installed after excavation and prior to structure installation. These cages are designed to strengthen the structural integrity of the foundations and would be assembled at the nearest multi-purpose yard and delivered to the structure site via flatbed truck or helicopter. These cages would be inserted in the holes prior to pouring concrete. The excavated holes containing the reinforcing anchor bolt cages would be filled with concrete.

LATTICE STEEL STRUCTURE FOUNDATIONS

Each 500kV support structures would require the installation of foundations. Excavations for the foundations would be completed using truck- or track-mounted equipment and/or augers of various sizes depending on the diameter and depth requirements of the hole to be drilled. Each foundation would extend approximately 2 feet above the ground level.

Self-supporting lattice towers will require four (4) foundations be installed, one for each leg of the tower. Foundations will be selected based upon geotechnical and geologic conditions. Foundation types include, drilled shaft concrete piers, shallow foundations, driven steel piles with a pile cap, steel screw piles with a pile cap, micropiles with a pile cap or steel grillages.
Excavations for shallow foundations will be completed using rubber tired or tracked conventional construction equipment. Excavation depth will be dependent on structure type, loading and soil conditions. For guyed structures the excavation will be prizmoidal, roughly 15 feet deep, 6 feet square at the top and 42 feet square at the bottom. A steel reinforced concrete footing would be cast against soil and a concrete pedestal would be cast to attach the tower to the foundation. The foundation will be backfilled using native soil compacted in small lifts.

Excavations for grillage foundations will be completed in the same way described for shallow concrete foundations. Except that the foundation itself will be constructed using galvanized common steel member shapes and/or plates sized and arranged to provide the necessary capacity. Steel shapes will provide attachment of the tower to the foundation. When a plate is used, poorly graded sand will be placed under

the plate to provide an even bearing surface. Similar to the shallow concrete foundation, the grillage foundation will be backfilled using native soils compacted in small lifts.

Guyed steel lattice structures require a single foundation at the centerline of the structure. The foundation can be a drilled shaft concrete pier, cast in place shallow foundation, driven steel piles with a pile cap, steel screw piles with a pile cap, micropiles with a pile cap or steel grillage. The structural guys will each require an anchor. The anchors can be shallowly buried grillage, plates or a concrete deadman, as well as steel driven, screwed or micro piles with or without a steel cap and grouted rods.

Piles are deep foundation elements manufactured from steel shapes or pipes. The types considered for this project are driven and screw piles. Driven piles are steel H or pipe shapes. They are advanced using a pile driving hammer attached to specialized tracked construction equipment. Screw Piles are manufactured using steel pipe with steel plate helixes welded to the lower section. They are “twisted” into the ground using a high torque head attached to tracked construction equipment. The advantage for both types of piles is that no excavation is required for installation.

Where solid rock is encountered, blasting, rock hauling, or the use of a rock anchoring or micro-pile system may be required. Micro-piles are high capacity, small diameter (5-inch to 12-inch) drilled and grouted in-place piles designed with a steel tendon designed to resist structural loading. The rock anchoring or micro-pile system would be used in areas where site access is limited or adjacent structures could be damaged as a result of blasting or rock-hauling activities.

All pile type foundations will require multiple pile elements be installed at each location. A cap, steel or concrete, will be required to tie the pile elements together structurally and provide the needed capacity.

In environmentally sensitive areas with very soft soils, additional equipment such as a HydroVac, which uses water pressure and a vacuum, may be used to excavate material into a storage tank. Alternatively, a temporary casing may be used during drilling to hold the excavation open. Depending on the foundation and soil types, the casing may be withdrawn as the concrete or grout is placed in the hole. In areas where it is not possible to operate large drilling equipment due to access or environmental constraints, hand digging may be required.
Reinforced-steel anchor bolt cages would be installed after excavation and prior to structure installation. These cages are designed to strengthen the structural integrity of the foundations and would be assembled at the nearest Yard and delivered to the structure site via flatbed truck or helicopter. These cages would be inserted in the holes prior to placing concrete. The excavated holes containing the reinforcing anchor bolt cages would be filled with concrete.

Typically, and because of the remote location of much of the transmission line route, concrete would be provided from portable batch plants set up approximately every 60 miles along the line route in one of the multi-purpose yards. Concrete would be delivered directly to the site in concrete trucks with a capacity of up to 10 cubic yards. In the more developed areas along the route and in proximity to the substations, the construction contractor may use local concrete providers to deliver concrete to the site when economically feasible.

3.2.6 Erect Support Structures

The 500-kV self-supporting lattice-steel and H-frame structures would be assembled on site, except where helicopter delivery is employed. Steel members for each structure would be delivered to the site by flatbed truck. Assembly would be facilitated on site by a truck-mounted crane. Subsequent to assembly,

the structures would be lifted onto foundations using a large crane designed for erecting structures. The crane would move along the right-of-way from structure site to structure site erecting the structures.

The 500kV guyed steel lattice structures would be assembled either directly on site or in a designated assembly facility near the line. Steel members for each structure would be delivered in packaged bundles to the structure site or to the assembly facility by flatbed truck. Assembly at the final installation site of each tower is the most common method used in transmission line construction. When assembled at the structure site, large components of the tower such as legs, main body, or head frame will be independently assembled on blocks with the use of a small crane. Site assembly will require several days with a crew of four to six workers. These tower sections will be located on the site convenient for erection by a larger crane.

Remote assembly may be performed in order to maximize efficiency. Tower sections can be assembled into easily transportable modules that can be taken to the tower site by flatbed truck or by helicopter. Modular assembly will allow crews to become proficient in assembly of the various tower elements, and to do it all in fewer sites. Material delivery can be streamlined by shipping raw tower materials to fewer locations. This assembly yard will be much larger than tower pads to accommodate approximately twenty towers at a time.

Subsequent to assembly, the structures would be lifted onto foundations using a large crane designed for erecting structures. The crane would move along the right-of-way from structure site to structure site erecting the structures.

Each tower site will require a temporary work pad of up to 250 feet by 250 feet (same as self-supporting towers) to accommodate assembly of tower components and to allow adequate space for a crane to lift the tower in to place. This required work pad area may be smaller if helicopter erection is used and if the tower is assembled in a remote yard.

When a separate facility is used for tower assembly, tower components will be assembled into modules that can be hauled to the site either by truck or by helicopter. Those modules to be hauled by truck will have limits in width and length. Those to be flown by helicopter will be limited based on weight and the lifting capability of the helicopter. Efficiency in helicopter construction requires limiting the number of lifts per tower, and having many tower modules ready for erection at one time. A large staging area strategically located near the line will facilitate the erection process.

Whether by land crane or by helicopter, the assembled tower will be lifted and placed on the center bearing foundation. While being held vertically in place, guy wires will be connected to pre-installed anchors at the four corners and adjusted to plumb and secure the tower.

The 345kV H-frame, single-circuit and double-circuit mono-pole structures would be framed on site. Two methods of assembly can be used to accomplish this, the first of which is to assemble the poles, braces, cross arms, hardware, and insulators on the ground. A crane is then used to set the fully framed structure by placing the poles in the excavated holes. Alternatively, aerial framing can be used by setting the poles in the ground first and assembling the braces, cross arms, hardware, and insulators in the air. A crane would move along the right-of-way from structure site to structure site setting the structures.

3.2.7 String Conductors, Shield Wire, and Fiber Optic Ground Wire

Conductor, shield wire, and OPGW would be placed on the transmission-line support structures by a process called stringing. The first step to wire stringing would be to install insulators (if not already installed on the structures during ground assembly) and stringing sheaves. Stringing sheaves are rollers that are attached temporarily to the lower portion of the insulators at each transmission line support

structure to allow conductors to be pulled along the line. These sheaves will each have two or three rollers corresponding to the number of conductors designated as a "bundle" at each phase location. All conductors of one phase will be pulled in together. Figure 13 illustrates the setup in installing conductors.

Additionally, temporary clearance structures (also called guard structures) would be erected where required prior to stringing any transmission lines. The temporary clearance structures typically are vertical wood poles with cross arms and are erected at road crossings or crossings with other energized electric and communication lines to prevent the wires being pulled in from accidental contact with other lines, vehicles, buildings or the ground during stringing activities. Bucket trucks also may be used to provide temporary clearance. Bucket trucks are trucks fitted with a hinged arm ending in an enclosed platform called a bucket, which can be raised to let the worker in the bucket service portions of the transmission structure as well as the insulators and conductors without climbing the structure.

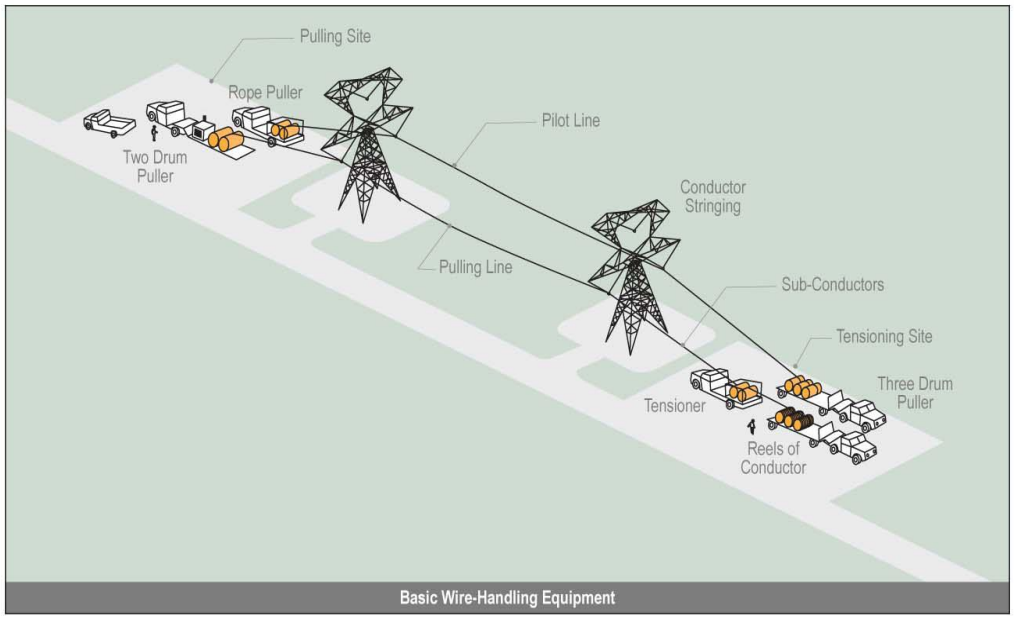

Figure 13 Conductor Installation

Once the stringing sheaves and temporary clearance structures are in place, the initial stringing operation would commence with the pulling of a lighter weight "sock line" through the sheaves along the same path the transmission line would follow. Typically, the sock line is pulled in via helicopter. The sock line is attached to the hard line, which follows the sock line as it is pulled through the sheaves. The hard line would be attached to the conductor, shield wire, or OPGW to pull them through the sheaves into their final location. Pulling the lines may be accomplished by attaching them to the large bull wheels a specialized wire stringing vehicle. Following the initial stringing operation, pulling and tensioning the line would be required to achieve the correct sagging of the transmission lines between support structures.

Line splicing sites for 500kV construction would be required approximately every conductor length on a standard size reel (approximately 9,000 feet) along the right-of-way and would measure approximately 100 by 100 feet with two wire pulling-and-tensioning sites occurring approximately every 3 to 5 miles measuring 250 by 400 feet each to accommodate required equipment. A pulling–and-tensioning site would be needed for each of the for 345kV segments requiring approximately 150 by 400 feet each to accommodate required equipment. Equipment at sites required for pulling-and-tensioning activities would include cranes, tractors, and trailers with spooled reels that hold the conductors and trucks and trailers with the pulling-and-tensioning equipment mounted. To the extent practicable, pulling and tensioning

sites would be located within the right-of-way. Depending on topography, grading may be required at some sites to create level pads for equipment. Finally, the tension and sag of conductors and wires would be fine-tuned, stringing sheaves would be removed, and the conductors would be attached permanently to the insulators at the support structures.

At the tangent (in-line) and small angle structures, the conductors would be attached to the insulators using clamps to "suspend" the conductors from the bottom of the insulators. At the larger angle dead-end structures, the conductors cannot be pulled through and so are cut and attached to the insulator assemblies at the structure "dead ending" the conductors. There are two primary methods to attach the conductor to the insulator assembly at the dead-end structure. The first method, hydraulic compression fittings, uses a large press and pump that closes a metal clamp or sleeve onto the conductor. This method requires heavy equipment and is time consuming. The second method, implosive fittings, uses explosives to compress the metal together. Implosive fittings do not require heavy equipment, but do create noise similar to a loud explosion when the primer is struck. The implosive type sleeve is faster to install and results in a secure connection between the conductor and the sleeve. Both implosive and conventional compression sleeves are planned for the Project.

The 500kV single-circuit lines use a three conductor bundle for each phase. At each single-circuit 500kV dead-end structure, nine compression or implosive dead-end bodies along with nine compression or implosive terminal connectors to connect the jumpers (three per phase, one for each of the three subconductors on each of the three phases) on each side of the structure would be required, for a total of 18 dead-end bodies and terminal connectors for each single-circuit dead-end structure. The 345kV single-circuit lines use a two-conductor bundle for each phase. Each 345kV dead-end structure would require 12 compression or implosive dead-end bodies along with 12 compression or implosive terminal connectors to connect the jumpers.

3.2.8 Site Reclamation

Multi-purpose yards, helicopter fly yards, and any other locations used for the purpose of the Project, as well as access roads would be kept in an orderly condition throughout the construction period. Approved enclosed refuse containers would be used throughout the Project. Refuse and trash would be removed from the sites and disposed of in an approved manner. Oils or chemicals would be hauled to a disposal facility authorized to accept such materials. Open burning of construction trash would not be allowed.

Disturbed areas not required for access roads and maintenance areas around structures would be restored and revegetated, as required by the landowner or land-management agency as soon as possible to limit the spread and establishment of noxious weed species. Multi-purpose yards, helicopter fly yards, structure work areas, wire pulling-and-tensioning sites, wire-splicing sites, guard structures, and temporary roads would be decompacted and the topsoil replaced unless otherwise specified by the landowner or land-management agency. The landowner, land-management agency, or local Natural Resources Conservation Service would be consulted regarding the appropriate seed mix and rate to revegetate the areas. Temporary culverts would be removed. Drivable at-grade waterbars would be installed where needed with frequency proportional to road slope to prevent erosion of the roadbed. All practical means would be made to restore the land outside the minimum areas needed for safe operation to its original contour and to restore natural drainage patterns along the right-of-way.

The seed mix used for any restoration and revegetation project would be determined in consultation with the landowner or land-management agency. All seed and plant material used on federal land would be approved by the federal land-management agency. All seed would meet all of the requirements of the Federal Seed Act and applicable Wyoming, Colorado, and Utah laws regarding seeds and noxious weeds. Only seed certified as "noxious weed free" would be used. If requested, the Company or its contractor

would provide the landowner with evidence of seed certification. Any seed mixture would not contain aggressive, non-native species that might invade the site. Where necessary, the surface of the ground would be prepared prior to seeding. Where practical, the Company would follow these guidelines for preparing the seedbed:

1. The road surface would be cleared of foreign materials, such as garbage, paper, and other materials, but all rocks, limbs, or minor woody debris would be left in place. The Company or its contractor would prepare the seedbed immediately prior to seeding.

2. Under favorable soil-moisture conditions, a standard disk or spring bar harrow would be used (where ripping is not required) to roughen the topsoil layer to create the desired surface texture before the seed is applied. Dirt clods and chiseled voids resulting from the roughening process increase the surface area for water collection and provide micro-sites for seed establishment. The soil should be disked or harrowed to no more than 2 inches deep at a time when soil moisture allows the surface to remain rough, with clods approximately 2 to 4 inches in diameter.

3. Ripping, disking, or harrowing would be performed parallel to surface contours. In this way, downslope alignment of furrows can be avoided. In areas that already have the desired soil characteristics; the seedbed does not need to be prepared.

After the seedbed has been prepared, the Company or its contractor would broadcast the seed on the disturbed area, after which the seed would be lightly harrowed into the roadbed or raked into the ground. Mulch and fertilizers would be added if necessary. An area would not be seeded when wind velocities prohibit the seed mix from being applied evenly. If the seed does not germinate and establish to an agreed-upon level of vegetation cover (e.g., consistent with adjacent site conditions) after two growing seasons, the Company or its contractor would reseed during a period acceptable to the landowner. On National Forest System land, the Company would be responsible for monitoring the effectiveness of soil protection and restoration measures and would take corrective measures as needed to ensure long-term soil protection.

Other seeding methods, such as drilling, hydroseeding, or aerial application, may be used depending on the area that requires reclamation and site conditions.

3.3 Communications System

OPGW for the communications system would be installed at the same time as the conductors on each of the transmission line structures. It would be tensioned in the same way.

3.3.1 Regeneration Stations

Similar to the substations, the selected area is graded, vegetation is removed, and a layer of crushed rock is installed. Typically, a 12-foot by 32-foot by 9-foot-tall building or equipment shelter (metal or concrete) would be constructed on the site. An emergency generator with a liquid-petroleum-gas-fuel tank would be installed, in accordance with current regulations, at the site inside the fenced area. Two diverse communication cable routes (aerial and/or buried) from the transmission right-of-way to the equipment shelter would be installed.

3.3.2 Access Road

Regeneration station roads would be constructed using a bulldozer or grader, followed by a roller to compact and smooth the ground. Front-end loaders would be used to move the soil locally or off site.

Either gravel or asphalt would be applied to the prepared base layer. The all-weather road surface would be graveled and would have crossroad drainage where applicable.

3.4 Substation/Series Compensation Substation Construction

As mentioned in Section 1.2 of this appendix, construction activities at the Aeolus, Clover, and Mona substations, including expansions and areas needed for equipment installation for Gateway South will be or have been completed as components of other projects of the Energy Gateway program. The two series compensation substations would be constructed as part of the Gateway South Project. A description of typical substation construction follows.

A typical construction sequence for substations and series compensation sites is described below. All equipment and materials would be hauled to the site via truck.

The first activity is grading of the site and access road. The amount of equipment and manpower would vary depending on the size of the site and the terrain. However, large earth moving equipment would be used including dump trucks, water trucks, graders, back hoes and dozers. Dump trucks would be used to haul away unsuitable materials and to bring in fill materials if necessary and access road surfacing.

The earth moving equipment would be used to grade the site relatively flat with a small slope for drainage, and depending on site design, drainage features and/or retention ponds. The water trucks would be used to control dust from site work activities.

The perimeter fence would then be constructed to provide site security and control access.

Foundations would then be installed. There are typically two types of foundations: drilled piers and slabs. Foundations are excavated using a large drill rig or backhoe depending on the type of foundation. Reinforcing steel and/or anchor bolts are placed in the excavation and forms are placed to form the sides of the top portion of the foundation. The entire excavation is then filled with concrete. The spoils from the excavations are hauled from the site and disposed of, or spread on the site if the material is suitable. On a large site, multiple crews would be used.

The control building would be constructed at the same time as the foundation construction. The building would be constructed of masonry block or would be pre-engineered steel construction depending on design.

The remaining below-grade construction is then completed, including grounding conductors and ground rods, conduit, and concrete cable trench. Excavations are made with trenchers and backhoes, the conductor or conduit is placed in the excavation, connections are made, and then backfilled. In some cases, bedding material, such as sand, is placed in the excavation prior to back filling.

Equipment and steel structures are set on the completed foundations and connected. Equipment includes circuit breakers; disconnect switches, transformers, reactors, capacitors, series capacitors, surge arresters, and instrument transformers. Rigid tubular bus is used for the main conductors, with flexible cable connections to the equipment. All high-voltage conductors are supported on insulators. Construction equipment includes cranes and man lifts. On a large site, multiple crews would be used.

Control and protection panels would be installed in the control building and would be connected to equipment in the yard using control and power cables installed in the cable trenches and conduits.

The final step is to cover the entire site with a crushed rock surfacing. Dump trucks would be used to haul the material to the site. Back hoes, skid steers, dozers and graders would be used to spread and compact the material over the site.

All equipment, protection and control systems would be tested prior to energizing.

3.4.1 Substation Roads

Substation roads would be constructed using a bulldozer or grader, followed by a roller to compact and smooth the ground. Front-end loaders would be used to move the soil locally or off-site. Either gravel or asphalt would be applied to the prepared base layer and would have crossroad drainage where applicable.

3.4.2 Geotechnical Drilling

Although the expansions and areas needed for Gateway South equipment installation were analyzed as part of other Energy Gateway program projects, geotechnical evaluation is required at both substation sites, as well as the two series compensation substation sites, to quantify subsurface conditions, determine engineering properties of soil for foundation design and provide recommendations for site development.

The substation geotechnical exploration program would consist of drilling approximately 25 to 30 borings at each substation and each series compensation station. Borings would be advanced to an approximate depth of 50 feet (depending on the depth of anticipated cuts, fills, and structure foundations) using hollow-stem auger, air-rotary, and/or ODEX drilling methods. If competent bedrock is encountered, coring would be advanced 5 to 15 feet into competent rock. Refraction microtremor and field resistivity testing would be completed at each of the two substation sites and the two series compensation station sites. Field resistivity measurements would be conducted in general accordance with the Wenner 4-pin method.

3.4.3 Clearing and Grading

Clearing of all vegetation would be required for the entire series compensation substation area, including a distance of about 10 feet outside the fence. This is required for personnel safety due to grounding concerns and because of lower clearances to energized conductors within the substations as compared to transmission lines. These lower clearances are allowed by the NESC because the entire substation is fenced.

An insulating layer of gravel on the surface of the substation is required to protect personnel from high currents and voltages during electrical fault conditions. Typically, vegetation is removed and a 4- to 6-inch layer of crushed rock is applied to the finished surface of the substation. Then the substation is usually treated with a soil sterilizer to prevent vegetation growth because the vegetation would degrade the insulating qualities of the crushed rock. The entire substation area would be graded essentially flat, with just enough slope to provide for runoff of precipitation. The substation would be graded to use existing drainage patterns to the extent possible. In some cases, drainage structures, such as ditches, culverts, and sumps, may be required. Clearing and grading material would be disposed of in compliance with local ordinances. Material from off site would be obtained at existing borrow or commercial sites and would be trucked to the substation using existing roads and the substation access road.

3.4.4 Multi-purpose Yards

Multi-purpose yards may be located outside the substation fenced area near the substation site. These yards may be part of the substation property or leased by the contractor. After construction is completed,

all debris and unused materials would be removed and the yards returned to preconstruction conditions by the construction contractor.

3.4.5 Grounding

A grounding system is required in each substation for detection of faults and for personnel safety. The grounding system typically consists of buried copper conductor arranged in a grid system and driven ground rods, typically 8 to 10 feet long. The ground rods and any equipment and structures are connected to the grounding conductor grid. The amount of conductor and length and number of ground rods required are calculated based on fault current and soil characteristics.

3.4.6 Fencing

Security fencing is installed around the entire perimeter of each new or expanded substation to protect sensitive equipment and prevent accidental contact with energized conductors by third parties. This 7-foot-high fence would be constructed of chain link with steel posts. One foot of barbed wire or other similar material is installed on top of the chain link yielding a total fence height of 8 feet. Locked gates would be installed at appropriate locations for authorized vehicle and personnel access.

3.4.7 Foundation Installation

Foundations for supporting structures are of two types: spread footings or drilled piers. Spread footings are placed by excavating the foundation area, placing forms and reinforced-steel and anchor bolts, and pouring concrete into the forms. After the foundation has been poured, the forms would be removed, and the surface of the foundation dressed. Pier foundations are placed in a hole generally made by a truck-mounted auger. Reinforced-steel and anchor bolts are placed into the hole using a truck-mounted crane. The portion of the foundation above ground would be formed. The portion below ground uses the undisturbed earth of the augered hole as the form. After the foundation has been poured, the forms would be removed, the excavation would be backfilled, and the surface of the foundation dressed.

Equipment foundations for circuit breakers and transformers would be slab-on-grade type. These foundations are placed by excavating the foundation area; placing forms, reinforced steel, and anchor bolts (if required); and placing concrete into the forms. After the foundations have been poured, the forms would be removed, and the surface of the foundation dressed. Where necessary, provision would be made in the design of the foundations to mitigate potential problems due to frost. Reinforced steel and anchor bolts would be transported to each site by truck, either as a prefabricated cage or loose pieces, which would be fabricated into cages on the site. Concrete would be hauled to the site in concrete trucks. Excavated material would be spread at the site or disposed of in accordance with local ordinances. Structures and equipment would be attached to the foundations by means of threaded anchor bolts embedded in the concrete. Some equipment such as transformers and reactors may not require anchor bolts.

3.4.8 Oil Containment

Some types of electrical equipment, such as transformers and some types of reactors and circuit breakers, are filled with an insulating mineral oil. Containment structures are required to prevent equipment oil from getting into the ground or water bodies in the event of a rupture or leak. These structures take many forms depending on site requirements, environmental conditions, and regulatory restrictions. The simplest type of oil containment is a pit, of a calculated capacity, under the oil-filled equipment that has an oil-impervious liner. The pit is filled with rock to grade level. In case of an oil leak or rupture, the oil captured in the containment pit is pumped into tanks or barrels and transported to a disposal facility. If

required, more elaborate oil containment systems can be installed. This may take the form of an on- or off-site storage tank and/or oil-water separator equipment depending on site requirements.

3.4.9 Structure, Control Building, and Equipment Installation

Supporting steel structures are erected on concrete foundations as noted above. These are set with a truck-mounted crane and attached to the foundation anchor bolts by means of a steel base plate. These structures would be used to support the energized conductors and certain types of equipment. This equipment is lifted onto the structure by means of a truck-mounted crane and bolted to the structures; electrical connections are then made. Some equipment, such as transformers, reactors, and circuit breakers, are mounted directly to the foundations without supporting structures. These are set in place by means of a truck-mounted crane. Some of this equipment requires assembly and testing on the pad. Electrical connections to the equipment are then made.

3.4.10 Control Building Construction

One or more control buildings are required at each substation to house protective relays, control devices, battery banks for primary control power, and remote monitoring equipment. The size and construction of the building depends on individual substation requirements. Typically, the control building would be constructed of concrete block, pre-engineered metal sheathed, or composite surface materials. Once the control house is erected, equipment is mounted and wired inside. All stand-alone regeneration stations and substations (with the exception of the Aeolus Substation) would require an emergency propane or diesel generator just outside the control house within the substation fenced area.

3.4.11 Conductor Installation

The two main types of high-voltage conductors used in substations are tubular aluminum for rigid bus sections and/or stranded-aluminum conductor for strain bus and connections to equipment. Rigid bus would be a minimum of 4 inches in diameter for this Project and would be supported on porcelain or polymer insulators on steel supports. The bus sections would be welded together and attached to special fittings for connection to equipment. Stranded-aluminum conductors would be used as flexible connectors between the rigid bus and the station equipment.

3.4.12 Conduit and Control Cable Installation

Most substation equipment requires low-voltage connections to protect relaying and control circuits. These circuits allow metering, protective functions, and control (both remote and local) of the power system. Connections are made from the control building to the equipment through multi-conductor control cables installed in conduits and/or pre-cast concrete cable trench system.

3.4.13 Construction Cleanup

The cleanup operation would be performed after construction activities are completed. All waste and scrap material would be removed from the site and deposited in approved locations or local permitted landfills in accordance with local ordinances. Ruts and holes outside the substation fence due to construction activities would be regraded.

3.4.14 Reclamation

Revegetation and restoration would be conducted as required and desired vegetation established to limit the spread and establishment of noxious weed species in disturbed areas.

3.5 Special Construction Techniques

3.5.1 Blasting

Typical 500kV steel-lattice structure foundations and the 345kV mono-pole structure foundations normally would be installed using drilled shafts or piers and 345kV H-frame structures would be embedded directly. If hard rock is encountered within the planned drilling depth, blasting may be required to loosen or fracture the rock in order to reach the required depth to install the structure foundations. Precise locations where blasting is expected would be identified based on a site-specific geotechnical study carried out as part of detailed design. A blasting plan would be developed and approved by the agencies as part of the Construction POD.

3.5.2 Helicopter Use

Helicopters may be used to construct in rough terrain where access is difficult or where access through environmentally sensitive areas cannot be avoided. A small helicopter may be used to move personnel and to install pulling lines (called "sock-lines") in order to facilitate installing conductor. Larger, heavy-lift helicopters could be used to ferry construction equipment, concrete, or structures to a specific site.

Project construction activities potentially facilitated by helicopters may include delivery of construction laborers, equipment, and materials to structure sites; structure placement; hardware installation; and wire-stringing operations. Helicopters also may be used to support the administration and management of the Project by the construction contractor or Company.

Helicopters would set down in areas identified to receive temporary disturbance. The operating area of the helicopters would be limited to helicopter fly yards and multi-purpose yards and positions along the utility corridors that previously have been identified for this purpose, and are safe locations for landing. When a portion of the transmission line requires construction using helicopter support, the multi-purpose yards would serve as a helicopter support yard for fueling, maintenance, and transporting both material and personnel to and from the structure site locations.

Final siting requirements of all helicopter fly yards and support yards and site requirements would be conducted with the input of the helicopter contractor, and affected private landowners and land-management agencies, such as the Bureau of Land Management (BLM) and U.S. Forest Service (USFS). The size of each helicopter fly yard and support yard would be dependent on the size and number of structures to be installed within safe flying range.

The area required for these fly yards can range in size and depends on road access and topography. The yards should be as level as possible, and be located strategically throughout the area of helicopter-supported construction activity. In some instances, because of the presence of vegetation and/or an uneven surface, the area required for a specific yard may need to be brushed, grubbed, and/or graded, including removal of trees in some instances. Ideally they should be located at a higher elevation than the structure sites they would support, as it is safer and more fuel efficient to fly down toward the structure site with heavy loads than it is to fly up to the structure site. Additionally, the fly yards must be accessible by road to facilitate the delivery of structure steel, rebar, concrete, construction tools, equipment, and other materials used in the construction of the structures.

The following are activities that may take place at helicopter fly yards:

- Structure steel, bolts, fittings, and blocking would be hauled and stored for use.

- Structure sections would be preassembled using a rough terrain crane.
- Rebar for assembling cages and/or preassembled rebar cages for structure foundations would be delivered, then flown out of this yard to each structure site.
- Concrete would be staged by truck delivery or batch plant, which would generate the required concrete to be loaded into a concrete transport bucket that would be attached to a helicopter and flown out to the structure sites.
- Refueling the helicopter and necessary light maintenance; a fuel truck and a mechanics truck would be located at these yards.
- Transporting personnel, tools, and small equipment by helicopter to and from the yards and the construction sites.
- Temporary parking for a fuel truck, a mechanics truck, and transport vehicles for personnel.
- Yards may serve as a safe landing area for the helicopter in case of an emergency.

The specific types of helicopters used would be based upon the Project need, the weight of the load being transported, and the altitude of the structure location. The various needs would range from light loads (crew/inspector transportation, and conductor stringing) to medium-to-heavy loads (tool and material delivery/removal, and structure removal/construction activities). The specific helicopters used also would vary, depending on availability and Project schedule.

Construction workers and equipment would be dropped off at pulling-and-tensioning sites, structure locations, or other work areas to receive temporary disturbance.

Large heavy-lift helicopters would be used to transport a structure to a location where the ground crew is waiting to spot the structure onto a preconstructed foundation. The helicopter would fly from predetermined yards and transport the preassembled structure sections to each structure site. Depending on the size and weight of the load, several round trips may be required from the helicopter fly yard to fully construct each structure. Each fly yard can support several structure sites and must be located no farther away from the structure-site locations than is within the safe round-trip-flight distance limitation of the helicopter(s) being used. The typical safe round trip flight distance for a heavy-lift helicopter is a 2- to 3-mile radius, depending upon altitude and load.

During helicopter operations, public access to defined areas would be restricted. Temporary road closures, traffic detours, and posted notices and signs would be used to restrict public access to construction areas. This would be in addition to general public access restrictions to protect public health and safety.

3.5.3 Water Use

Construction of the transmission lines and series compensation substations would require water. Major water uses are for transmission line structure and station foundations, and dust control during right-of-way and substation grading and site work. A minor use of water during construction would include the establishment of substation landscaping where required. Table 4 (based on the route of approximately 400 miles) lists the approximate amount of water required for the Project.

Table 4 Estimated Water Usage	
Transmission Line Spread	**Total Million Gallons**
Spread 1	59
Spread 2	27
Spread 3	21
Total Transmission Line Water Usage	107
Series Compensation Substations	**Total Million Gallons**
Series Compensation Substation 1	7
Series Compensation Substation 2	10
Total Series Compensation Substations	17
Total Million Gallons Water Required	**124**

Water would be used for two primary purposes: foundation construction and right-of-way and access-road dust control. The required water would be procured from municipal sources, from commercial sources, or under a temporary water-use agreement with landowners holding existing water rights. No new water rights would be required. In the construction of foundations, water is transported to the batch-plant site where it would be used to produce concrete. From the batch plant, the wet concrete would be transported to the structure site in concrete trucks for use in foundation installation.

Construction of the transmission lines and related facilities would generate a temporary increase in fugitive dust. If the level of fugitive dust is too high in specific Project areas, as determined in cooperation with the landowner or land-management agency, water would be applied to disturbed areas to minimize dust.

Water usage for substation construction is primarily for dust control during site preparation work. During this period, construction equipment would be cutting, moving, and compacting the subgrade surface. As a result, water trucks patrolling the site to control dust would make as many as one pass per hour over the station site. Once site preparation work is complete, concrete for the placement of foundations becomes the largest user of water and dust control becomes minimal.

Generally, water use will be less when using guyed structures due to there being less volume of concrete used. Additionally, water use for foundations regardless of structure type pales in comparison to that used for dust control. Water estimates will be provided when structure spotting is complete.

Once site grading is complete, the balance of the substation construction work would be performed on bare subgrade soil or subgrade with a thin layer of rock. Fire risk would be minimal due to the bare ground or rock surface, and would be contained within the confines of station fenced area.

3.6 Construction Elements

3.6.1 Construction Workforce

The proposed Project would be constructed primarily by contract personnel, with the Company responsible for Project administration and inspection. The construction workforce for the transmission line would consist of laborers, craftsmen, supervisory personnel, support personnel, and construction management personnel who would perform the construction tasks see Table 5 for work force estimates.

Site grading requires a small number of people including a surveyor, heavy equipment operators, foreman, and construction-management personnel. Each series compensation station would require numerous concrete crews in order to complete the below grade construction and concrete placement on schedule. Concrete most likely would be provided by a batch plant producing approximately 160 cubic yards per day delivered in 8-cubic-yard trucks. Other below-grade crews would be needed to install conduit, cable trench, and ground mat material. The below-grade crews would be on site overlapping the schedule of the concrete crew. Several three-man crews working with boom trucks and bucket trucks would erect the steel and install the physical equipment in the yard (Table 6 – Manpower and Equipment for Series Compensation Stations). Electrical installation would be handled by several two-man teams alternating between indoor and outdoor activity. Construction generally would occur between 7 a.m. and 7 p.m., Monday through Saturday. Additional hours may be necessary to make up schedule deficiencies or to complete critical construction activities.

3.6.2 Construction Equipment and Traffic

Equipment required for construction of Gateway South would include, but would not be limited to, that listed in Table 7 – Typical Equipment and Duration of Use. This table includes the equipment type and the anticipated daily duration of use for each equipment type.

Estimated Personnel and Equipment for 500kV Transmission Line Construction access would occur at several locations along the transmission line route, resulting in dispersed construction traffic. Truck deliveries normally would be on weekdays between 7:00 a.m. and 5:00 p.m.

3.6.3 Construction Equipment and Traffic

Equipment required for construction of Gateway South would include, but would not be limited to, that listed in Table 7 – Typical Equipment and Duration of Use. This table includes the equipment type and the anticipated daily duration of use for each equipment type.

Estimated Personnel and Equipment for 500kV Transmission Line Construction access would occur at several locations along the transmission line route, resulting in dispersed construction traffic. Truck deliveries normally would be on weekdays between 7:00 a.m. and 5:00 p.m.

The equipment required for transmission line construction is similar for both the 500kV and 345kV lines. The highest level of traffic would be when the wire-stringing operations begin while several other operations are occurring at the same time, which would likely include excavating holes, installing foundations, hauling steel, assembling structures, and erecting structures.

Table 5
Work Force Estimation – Duration and Totals for Construction of a 500-kilovolt Transmission Line

Work Item	Estimated Duration (Weeks)			Number of Crews			Number of Workers per Crew			Total Number of Workers		
	Spread 1	Spread 2	Spread 3	Spread 1	Spread 2	Spread 3	Spread 1	Spread 2	Spread 3	Spread 1	Spread 2	Spread 3
Construction management/ supervision – contractor	121	91	107	1	1	1	10	10	10	10	10	10
Construction maintenance and repairs	121	91	107	1	1	1	8	8	8	8	8	8
Construction management – owner	121	91	107	1	1	1	5	5	5	5	5	5
Inspection	121	91	107	1	1	1	12	12	12	12	12	12
Contractor mobilization	16	16	16	3	3	3	3	3	3	9	9	9
Receive and handle materials	114	82	98	2	2	2	4	4	4	8	8	8
Survey/stake access roads and structure pads	85	47	44	2	2	2	3	3	3	6	6	6
Construct access roads and structure pads	85	47	44	1	1	2	9	9	9	9	9	18
Survey/stake new structure locations	85	47	44	1	1	1	3	3	3	3	3	3
Tree removal/clearing	0	21	32	0	2	2	0	9	9	0	18	18
Excavate structure holes	84	42	33	2	2	2	2	2	2	4	4	4
Tie and haul rebar	84	42	33	1	1	1	5	5	5	5	5	5
Set forms and pour concrete	84	42	33	1	1	1	13	13	13	13	13	13
Batch plant(s) and concrete trucks	84	42	33	1	1	1	13	13	13	13	13	13
Haul steel and materials	84	42	33	1	1	1	3	3	3	3	3	3
Haul blocking and shake-out steel	84	42	33	1	1	1	4	4	4	4	4	4
Assemble structures – tangent	84	42	33	6	6	6	9	9	9	54	54	54
Assemble structures – dead-end	84	42	33	2	2	2	12	12	12	24	24	24
Bottom setting crews (legs and body ext.)	84	42	33	1	1	1	8	8	8	8	8	8
Structure torqueing crew	84	42	33	1	1	1	5	5	5	5	5	5
Erect structures	72	37	28	2	2	2	10	10	10	20	20	20
Backbolt and torque after erection	72	37	28	2	2	2	3	3	3	6	6	6
Load, haul, and spot overhead optical ground wires, overhead optical ground wire, and conductors	68	35	33	1	1	1	5	5	5	5	5	5

Table 5
Work Force Estimation – Duration and Totals for Construction of a 500-kilovolt Transmission Line

Work Item	Estimated Duration (Weeks)			Number of Crews			Number of Workers per Crew			Total Number of Workers		
	Spread 1	Spread 2	Spread 3	Spread 1	Spread 2	Spread 3	Spread 1	Spread 2	Spread 3	Spread 1	Spread 2	Spread 3
Install and remove guard structures	68	35	33	1	1	1	5	5	5	5	5	5
Install overhead optical ground wire, overhead optical ground wire, and conductors	68	35	33	1	1	1	12	12	12	12	12	12
Sage, dead-end, clip, dampers, spacers	68	35	33	6	6	6	6	6	6	36	36	36
Final clean up (gig sheet)	63	33	33	1	1	1	4	4	4	4	4	4
Reclamation/restoration	63	33	33	2	2	2	4	4	4	8	8	8
									Total per spread	299	317	326
									Total workers	942		

NOTES:
Spread 1 of the Company's preferred route in the Draft EIS, approximately 228 miles consisting of Links W15, W21, W35, W36, W30, W32, W101, W125, W108, W116, W113, W410, W411, C31, C61, C91, C175, C186, C188
Spread 2 of the Company's preferred route in the Draft EIS, approximately 103 miles consisting of Links U242, U280, U285, U300, U400, U401, U404, U406
Spread 3 of the Company's preferred route in the Draft EIS, approximately 76 miles consisting of Links U525, U435, U545, U546, U548, U600, U636, U637, U639, U650, U640

Table 6 Equipment and Manpower Needed for Series Compensation Stations	
Equipment	**Quantity**
Site Development (90 acres)	
Scraper – Cat 631	4
Dozer – Cat D9 (pushing and ripping)	1
Dozer – Cat D8 (fill Cat)	1
Grader – Cat 16G	2
Roller Compacter – Cat 583	2
Excavator – Cat 330 (slopes and ditching)	1
Water truck	2
Water storage	1
Water self-loader tower	1
Pump (4-inch)	1
Water tanker	2
GPS laser	1
All-terrain vehicle grader	1
Mechanic truck	1
Fuel truck	1
Pickup – 3/4-ton extended cab	2
Pickup – 1-ton crew cab	6
Office trailer	1
Port-a-potty	4
Dumpster	2
Manpower	35 to 40 days
Foundations	
Drill – Texoma 600 (for bus supports – typical)	1
Drill – Watson 3100 (for towers – typical)	1
Boom truck – 33-ton, National 14110	1
Boom truck – 17-ton, JLG1700JBT	1
Excavator – Cat 315	1
Roller compactor – Bomag BW124	1
Plate compactor – Wacker WP1550	2
Rubber-tire backhoe – Cat 326	1
End dump	1
Water truck	1
Mechanic truck	1
Fuel truck	1
GPS laser	1
All-terrain vehicle for grader	1
Pickup – ¾-ton extended cab	2
Pickup – 1-ton crew cab	2
All-terrain vehicle (golf cart look alike)	3
Office trailer	1
Port-a-potty	4
Dumpster	3
Manpower	30 to 40 days

Table 6 Equipment and Manpower Needed for Series Compensation Stations	
Equipment	**Quantity**
Steel Structures	
Crane – Grove RT600E	1
Boom truck – 33-ton, National 14110	2
Boom truck – 17-ton, JLG1700JBT	1
Manlift	2
Manpower	12 to 40 days
Equipment Install, Insulators and Bus	
Boom truck – 33-ton, National 14110	2
Boom truck – 17-ton, JLG1700JBT	2
Manlift	4
Welder truck	4
Tools and materials – Conex	2
Manpower	20 to 40 days
Control Wiring	
Boom truck – 17-ton, JLG1700JBT	2
Manlift	4
Small puller	3
Reel stand on trailer	2
Flatbed truck – 10-ton	1
Van – ¾-ton	4
Tools and materials – Conex	2
Fiber splicer van	1
Office trailer	1
Port-a-potty	3
Dumpster	3
Manpower	20 to 40 days

Table 7
Typical Equipment and Duration of Use
for Construction of a 500-kilovolt Transmission Line

Equipment	Spread 1				Spread 2				Spread 3			
	Quantity	Hours per Day	Days per Week	Estimated Duration (weeks)	Quantity	Hours per Day	Days per Week	Estimated Duration (weeks)	Quantity	Hours per Day	Days per Week	Estimated Duration (weeks)
Project Management/Inspection												
Truck – pickup	15	6	6	121	15	6	6	91	15	6	6	107
Project Supervision – Contractor												
Truck – pickup	10	8	6	121	10	8	6	91	10	8	6	107
Main121tenance – Contractor												
Truck – pickup	1	6	6	121	1	6	6	91	1	6	6	107
Truck – flatbed (1-ton)	2	6	6	121	2	6	6	91	2	6	6	107
Truck – mechanics (2-ton)	5	8	6	121	5	8	6	91	5	8	6	107
Survey												
Truck – pickup	1	4	6	85	1	4	6	47	1	4	6	44
Truck – flatbed (1-ton)	1	4	6	85	1	4	6	47	1	4	6	44
Multi-purpose Yards												
Truck – pickup	1	4	6	114	1	4	6	92	1	4	6	98
Truck – flatbed (1-ton)	1	2	6	114	1	2	6	92	1	2	6	98
Truck – flatbed (2-ton)	1	2	6	114	1	2	6	92	1	2	6	98
Forklift (5-ton)	1	8	6	114	1	8	6	92	1	8	6	98
Forklift (10-ton)	1	8	6	114	1	8	6	92	1	8	6	98
Crane RT (20-ton)	1	2	6	114	1	2	6	92	1	2	6	98
Trailer – office	1	10	6	114	1	10	6	92	1	10	6	98
Generator – portable (office)	1	10	6	114	1	10	6	92	1	10	6	98
Tree Clearing												
Truck – pickup	Not applicable				2	8	6	21	2	8	6	32
Truck – flatbed (1-ton)					2	4	6	21	2	4	6	32
Truck – flatbed (2-ton)					1	4	6	21	1	4	6	32
Truck – semi-trailer					4	8	6	21	4	8	6	32
Trailer – timber haul, with pup					4	8	6	21	4	8	6	32
Loader – with grapple					2	6	6	21	2	6	6	32
Loader – bucket					2	6	6	21	2	6	6	32
Slasher					2	6	6	21	2	6	6	32
Chain saws					6	8	6	21	6	8	6	32
Road Building												
Truck – pickup	1	2	6	85	1	2	6	47	2	2	6	44
Truck – flatbed (1-ton)	1	2	6	85	1	2	6	47	2	2	6	44
Truck – flatbed (2-ton)	1	4	6	85	1	4	6	47	2	4	6	44
Truck – water	1	6	6	85	1	6	6	47	1	6	6	44

Table 7
Typical Equipment and Duration of Use
for Construction of a 500-kilovolt Transmission Line

Equipment	Spread 1				Spread 2				Spread 3			
	Quantity	Hours per Day	Days per Week	Estimated Duration (weeks)	Quantity	Hours per Day	Days per Week	Estimated Duration (weeks)	Quantity	Hours per Day	Days per Week	Estimated Duration (weeks)
Truck – fuel	1	4	6	85	1	4	6	47	1	4	6	44
Truck – dump (10Y)	2	6	6	85	2	6	6	47	4	6	6	44
Truck – semi-trailer	2	6	6	85	2	6	6	47	4	6	6	44
Trailer – lowboy	2	6	6	85	2	6	6	47	4	6	6	44
Backhoe – with bucket	1	6	6	85	1	6	6	47	2	6	6	44
Loader – with bucket	2	6	6	85	2	6	6	47	4	6	6	44
Loader – with brusher/grubber	2	8	6	85	2	8	6	47	2	8	6	44
Grader – road	1	8	6	85	1	8	6	47	2	8	6	44
Dozer – with blade	2	8	6	85	2	8	6	47	4	8	6	44
Dozer – with ripper	1	8	6	85	1	8	6	47	1	8	6	44
Foundations												
Truck – pickup	3	8	6	84	3	8	6	42	3	8	6	33
Truck – flatbed (1-ton)	6	4	6	84	6	4	6	42	6	4	6	33
Truck – flatbed (2-ton)	2	5	6	84	2	5	6	42	2	5	6	33
Truck – water	1	6	6	84	1	6	6	42	1	6	6	33
Truck – fuel	1	4	6	84	1	4	6	42	1	4	6	33
Truck – dump (10Y)	2	6	6	84	2	6	6	42	2	6	6	33
Truck – semi-trailer	2	8	6	84	2	8	6	42	2	8	6	33
Trailer – lowboy	1	6	6	84	1	6	6	42	1	6	6	33
Trailer – flatbed	2	6	6	84	2	6	6	42	2	6	6	33
Truck – flatbed with boom (5-ton)	1	6	6	84	1	6	6	42	1	6	6	33
Truck – concrete	4	6	6	84	4	6	6	42	4	6	6	33
Drill rig – digger	2	8	6	84	2	8	6	42	2	8	6	33
Drill rig – pneumatic wagon	1	6	6	84	1	6	6	42	1	6	6	33
Backhoe – with bucket	1	4	6	84	1	4	6	42	1	4	6	33
Dozer – with blade	1	4	6	84	1	4	6	42	1	4	6	33
Loader – with bucket	1	4	6	84	1	4	6	42	1	4	6	33
Crane RT (20-ton)	1	4	6	84	1	4	6	42	1	4	6	33
Forklift (5-ton)	1	4	6	84	1	4	6	42	1	4	6	33
Loader – bobcat	1	4	6	84	1	4	6	42	1	4	6	33
Generator – portable (5 horsepower)	2	4	6	84	2	4	6	42	2	4	6	33
Trailer – office	1	10	6	84	1	10	6	42	1	10	6	33
Generator – portable (office)	1	10	6	84	1	10	6	42	1	10	6	33

Table 7
Typical Equipment and Duration of Use
for Construction of a 500-kilovolt Transmission Line

Equipment	Spread 1				Spread 2				Spread 3			
	Quantity	Hours per Day	Days per Week	Estimated Duration (weeks)	Quantity	Hours per Day	Days per Week	Estimated Duration (weeks)	Quantity	Hours per Day	Days per Week	Estimated Duration (weeks)
Material Hauling												
Truck – flatbed (1-ton)	1	4	6	114	1	4	6	42	1	4	6	33
Truck – flatbed (2-ton)	1	4	6	114	1	4	6	42	1	4	6	33
Truck – semi-trailer	1	8	6	114	1	8	6	42	1	8	6	33
Truck – flatbed with boom (5-ton)	1	4	6	114	1	4	6	42	1	4	6	33
Trailer – flatbed	6	8	6	114	6	8	6	42	6	8	6	33
Forklift (10-ton)	1	4	6	114	1	4	6	42	1	4	6	33
Steel Assembly												
Truck – pickup	4	8	6	84	4	8	6	42	4	8	6	33
Truck – flatbed (1-ton)	20	4	6	84	20	4	6	42	20	4	6	33
Truck – flatbed (2-ton)	3	8	6	84	3	8	6	42	3	8	6	33
Truck – water	1	6	6	84	1	6	6	42	1	6	6	33
Crane RT (20-ton)	6	4	6	84	6	4	6	42	6	4	6	33
Compressor – pneumatic	6	6	6	84	6	6	6	42	6	6	6	33
Generator – portable (5 horsepower)	2	2	6	84	2	2	6	42	2	2	6	33
Trailer – office	1	10	6	84	1	10	6	42	1	10	6	33
Generator – portable (office)	1	10	6	84	1	10	6	42	1	10	6	33
Steel Erection – Conventional[1]												
Truck – pickup	3	8	6	72	3	8	6	37	3	8	6	28
Truck – flatbed (1-ton)	6	4	6	72	6	4	6	37	6	4	6	28
Truck – flatbed (2-ton)	2	4	6	72	2	4	6	37	2	4	6	28
Crane RT (20-ton)	2	6	6	72	2	6	6	37	2	6	6	28
Crane RT (75-ton)	2	6	6	72	2	6	6	37	2	6	6	28
Crane (150- to 250-ton)	2	6	6	72	2	6	6	37	2	6	6	28
Dozer – with blade	2	6	6	72	2	6	6	37	2	6	6	28
Compressor - pneumatic	2	4	6	72	2	4	6	37	2	4	6	28
Steel Erection – Helicopter[2]												
Truck – pickup	3	8	6	24	3	8	6	12	3	8	6	12
Truck – flatbed (1-ton)	6	4	6	24	6	4	6	12	6	4	6	12
Truck – flatbed (2-ton)	2	4	6	24	2	4	6	12	2	4	6	12
Crane RT (20-ton)	1	6	6	24	1	6	6	12	1	6	6	12
Crane RT (75-ton)	1	6	6	24	1	6	6	12	1	6	6	12
Crane (150- to 250-ton)	1	6	6	24	1	6	6	12	1	6	6	12

Table 7
Typical Equipment and Duration of Use
for Construction of a 500-kilovolt Transmission Line

Equipment	Spread 1				Spread 2				Spread 3			
	Quantity	Hours per Day	Days per Week	Estimated Duration (weeks)	Quantity	Hours per Day	Days per Week	Estimated Duration (weeks)	Quantity	Hours per Day	Days per Week	Estimated Duration (weeks)
Dozer – with blade	2	6	6	24	2	6	6	12	2	6	6	12
Compressor - pneumatic	2	4	6	24	2	4	6	12	2	4	6	12
Truck – pickup	2	8	6	12	2	8	6	6	2	8	6	6
Truck – flatbed (1-ton)	2	4	6	12	2	4	6	6	2	4	6	6
Truck – mechanics (2-ton)	1	4	6	12	1	4	6	6	1	4	6	6
Truck – fuel	1	2	6	12	1	2	6	6	1	2	6	6
Helicopter – skylift (large)	1	8	6	12	1	8	6	6	1	8	6	6
Wire Installation												
Truck – pickup	6	8	6	68	6	8	6	35	6	8	6	33
Truck – flatbed (1-ton)	10	6	6	68	10	6	6	35	10	6	6	33
Truck – flatbed (2-ton)	2	8	6	68	2	8	6	35	2	8	6	33
Truck – water	1	6	6	68	1	6	6	35	1	6	6	33
Truck – flatbed with boom (5-ton)	6	8	6	68	6	8	6	35	6	8	6	33
Truck – splicing	1	4	6	68	1	4	6	35	1	4	6	33
Truck – semi-trailer	3	8	6	68	3	8	6	35	3	8	6	33
Trailer – flatbed	4	4	6	68	4	4	6	35	4	4	6	33
Trailer – lowboy	3	4	6	68	3	4	6	35	3	4	6	33
Trailer – reel stand	12	4	6	68	12	4	6	35	12	4	6	33
Crane RT (35-ton)	3	2	6	68	3	2	6	35	3	2	6	33
Puller – triple drum	1	2	6	68	1	2	6	35	1	2	6	33
Puller – single drum	1	2	6	68	1	2	6	35	1	2	6	33
Puller – sockline	2	2	6	68	2	2	6	35	2	2	6	33
Tensioner – conductor	1	2	6	68	1	2	6	35	1	2	6	33
Tensioner – shield wire	1	2	6	68	1	2	6	35	1	2	6	33
Dozer – sagging	2	2	6	68	2	2	6	35	2	2	6	33
Dozer – with blade	2	2	6	68	2	2	6	35	2	2	6	33
Backhoe – with bucket	1	2	6	68	1	2	6	35	1	2	6	33
Drill rig – digger	1	2	6	68	1	2	6	35	1	2	6	33
Compressor – pneumatic	1	2	6	68	1	2	6	35	1	2	6	33
Generator – portable (5 horsepower)	2	2	6	68	2	2	6	35	2	2	6	33
Helicopter – pilot line (small)	1	8	6	68	1	8	6	35	1	8	6	33

Table 7
Typical Equipment and Duration of Use
for Construction of a 500-kilovolt Transmission Line

Equipment	Spread 1				Spread 2				Spread 3			
	Quantity	Hours per Day	Days per Week	Estimated Duration (weeks)	Quantity	Hours per Day	Days per Week	Estimated Duration (weeks)	Quantity	Hours per Day	Days per Week	Estimated Duration (weeks)
Restoration												
Truck – pickup	3	6	6	63	3	6	6	33	3	6	6	33
Truck – flatbed (1-ton)	3	6	6	63	3	6	6	33	3	6	6	33
Truck – flatbed (2-ton)	1	4	6	63	1	4	6	33	1	4	6	33
Truck – water	1	6	6	63	1	6	6	33	1	6	6	33
Truck – dump (10Y)	1	6	6	63	1	6	6	33	1	6	6	33
Truck – semi-trailer	1	6	6	63	1	6	6	33	1	6	6	33
Trailer – lowboy	1	6	6	63	1	6	6	33	1	6	6	33
Backhoe – with bucket	1	4	6	63	1	4	6	33	1	4	6	33
Loader – with bucket	1	4	6	63	1	4	6	33	1	4	6	33
Grader – road	1	8	6	63	1	8	6	33	1	8	6	33
Dozer – with blade	1	8	6	63	1	8	6	33	1	8	6	33
Tractor – 4-wheel drive with chisel and/or seeder	1	8	6	63	1	8	6	33	1	8	6	33

NOTES:
[1]Steel erection – conventional: use this set of equipment values if structure erection is considered to be by conventional ground based methods.
[2]Steel erection – helicopter: use this set of equipment values if structure erection is considered to include heavy-lift helicopter methods.
Spread 1 of the Company's DEIS preferred route, approximately 228 miles consisting of Links W15, W21, W35, W36, W30, W32, W101, W125, W108, W116, W113, W410, W411, C31, C61, C91, C175, C186, C188
Spread 2 of the Company's DEIS preferred route, approximately 103 miles consisting of Links U242, U280, U285, U300, U400, U401, U404, U406
Spread 3 of the Company's DEIS preferred route, approximately 76 miles consisting of Links U525, U435, U545, U546, U548, U600, U636, U637, U639, U650, U640

For the substation work, the highest level of traffic would be during site grading and foundation installation. It is estimated that 2,000 to 4,000 cubic yards of topsoil would not be suitable for re-use on each site and would have to be disposed of off-site at a remote location. Dump trucks would be leaving and returning to the site constantly each day for the duration of the site grading. Each site would require between 4,000 and 7,000 cubic yards of concrete. Delivering, placing, and finishing concrete is labor intensive. Once concrete placement is complete, traffic on the surrounding roads would subside. Workers would arrive in the morning and leave at the end of the day. The balance of daily traffic would be material deliveries from storerooms, which would probably be one or two trips per day. Each substation would require the delivery of permitted loads such as transformers and/or reactors. Each reactor or transformer bank required would require four large multiple-wheel lowboy trucks. Delivery would be scheduled to match the completion of their respective foundations.

3.6.4 Removal of Facilities and Waste Disposal

Substation and right-of-way construction would generate a variety of solid wastes including concrete, hardware, and wood debris. The solid wastes generated during construction would be recycled or hauled away for disposal at a suitable facility based on their properties. Excavation along the right-of-way and at substations would generate solid wastes that could potentially be used as fill; however, surplus excavated material would be removed for disposal. Excavated material that is clean and dry would be spread along the right-of-way.

The majority of surplus excavated materials associated with substation construction results from spoils created during site grading. Very little of the soil excavated during foundation installation is waste product. Above-grade waste may consist of packing material such as crates, pallets, and paper wrapping to protect equipment during shipping. It is assumed a 12-yard dumpster would be filled once a week with waste material for the duration of each substation project.

3.6.5 Construction Schedule

The Company intends to continue to refine the design of the Gateway South during the agency approval process in order to commence construction immediately when the Project is approved. Final engineering surveys would determine the exact locations of structures, access roads, and other features prior to the start of construction and would be included in the Construction POD. Due to the broad scope of construction, the varied nature of construction activities, and the geographic diversity of the Project area, the Company intends to hire multiple contractors to complete Project work within the projected timeframe and in accordance with industry performance standards. Construction would likely involve multiple construction contracts over a probable 3 to 4-year period ending in December 2020. Multiple spreads would be under construction at the same time. The Company developed a Project construction schedule based on this strategy (Table 8 – Project Duration Schedule). The most construction activity (access disturbance, structure construction, substation expansion, series compensation station development and line stringing) would occur in the first 2 years.

Although the construction rate of progress would be reduced in the winter, it is anticipated that construction would continue through the winter months in the lower-elevation areas of the Project, except during winter storms. In the higher-elevation areas of the Project, winter storms and snow would limit access to the right-of-way. In these areas, it is expected that construction would be suspended on some portions of the right-of-way during the peak winter months and construction resources would either be demobilized or shifted to other segments of the Project.

Transmission-line construction commences with contractor mobilization. The contractor would mobilize equipment and personnel to the construction site at various stages in the Project schedule depending on operational requirements. This would cumulatively require approximately 6 weeks throughout the

schedule for Segments 1, 2, and 3. Construction management, engineering support, inspection, materials handling, and administration are required throughout the Project. First, surveyors would start at one end of the segment and stake the locations of access roads. Road construction can start 1 to 2 weeks after the surveyors begin, which may require clearing in higher elevations where tree removal is required prior to road construction. After a couple of weeks of road construction another survey crew can begin staking the structure locations. A week or two after the survey crew starts staking structure locations; excavation of holes for foundations can begin. The installation of the concrete pier foundations would begin immediately after that. The foundations need time to cure and develop to full structural strength (i.e., compression capacity) before lattice structures or mono-pole structures can be installed. A couple weeks after foundation installation has begun, lattice-structure and mono-pole hauling, assembly, and erection can begin. For 345kV H-frame construction, structure assembly and setting can begin immediately after the excavation of holes has begun. The wire installation crews would start approximately 8 to 12 weeks after assembly and erection/setting begins. This would be followed by final cleanup, reclamation, and restoration. Substation construction includes five activities: (1) site grading (grading and access road development); (2) below-grade construction (primarily the installation of foundations; (3) above-grade construction (steel erection and building construction); (4) electrical (installation and termination of control wiring); and (5) testing (functional testing of control and monitoring schemes). Typically, these activities overlap and complement each other, allowing the construction of a substation to proceed more quickly than transmission-line construction. It is estimated that the site-grading activity and access-road work for Gateway South series compensation substations would take 4 to 8 weeks to complete, depending on the size of the site.

Below-grade construction can be completed in 3 months or less for all substations that are expansions of existing substations. In these cases the basic infrastructure is already in place, having been installed with the initial substation and designed for the future expansion requirements. Only the new substations would take longer to complete.

Above-grade construction duration is highly dependent on the level of construction workforce the contractor chooses. Due to the size of each station, many crews can work on steel erection and equipment assembly without interfering with each other. The greatest amount of schedule recovery or acceleration in a station's construction schedule can be achieved during this timeframe. It is estimated that, for the series compensation substations, the erection of steel, bus assembly, and major equipment assembly can be completed in between 4 and 6 months.

Electrical construction is a long and labor-intensive task. Although multiple crews can work in a yard at any given time, the space in a control building is very limited and would determine the length of this task. In the case of each of these stations, given the size and type of equipment to be installed, there would be miles of cable to be pulled into conduit and duct banks and thousands of connections to be made and double checked prior to the start of testing. The series compensation substations would take longer than existing substations that already have the basic infrastructure in place.

Prior to starting construction, the Company may be required to conduct on-site environmental surveys in accordance with applicable protocols or mitigation measures adopted by BLM and other agencies as Project conditions. Accordingly, adjustments might occur to the Project schedule as necessary to avoid sensitive resources and comply with the approved Construction POD. Pre-construction activities, including pre-construction environmental surveys, materials procurement, design, contracting, right-of-way acquisition, and permitting efforts, are not shown in the summary schedule.

The schedule is predicated upon the Company's ability to complete the following tasks in a timely manner:

- Secure all necessary permit approvals
- Secure agency approval
- Complete biological and cultural survey work
- Construct within environmental time constraints
- Order and receive equipment
- Secure construction contractor resources and associated construction equipment. Maintain continuous construction activity with no delay due to environmental, administrative, or legal issues.

Table 8a
Project Duration Schedule – Months 1 to 8

Spread 1 – 228 Miles (W15, W21, W35, W36, W30, W32, W101, W125, W108, W116, W113, W410, W411, C31, C61, C91, C175, C186, C188)	**2015**																																		
	Month 1				**Month 2**				**Month 3**					**Month 4**				**Month 5**				**Month 6**					**Month 7**				**Month 8**			
	1/3	1/10	1/17	1/24	1/31	2/7	2/14	2/21	2/28	3/7	3/14	3/21	3/28	4/4	4/11	4/18	4/25	5/2	5/9	5/16	5/23	5/30	6/6	6/13	6/20	6/27	7/4	7/11	7/18	7/25	8/1	8/8	8/15	8/22
	6	12	18	24	30	36	42	48	54	60	66	72	78	84	90	96	102	108	114	120	126	132	138	144	150	156	162	168	174	180	186	192	198	204
	Wk 1	Wk 2	Wk 3	Wk 4	Wk 5	Wk 6	Wk 7	Wk 8	Wk 9	Wk 10	Wk 11	Wk 12	Wk 13	Wk 14	Wk 15	Wk 16	Wk 17	Wk 18	Wk 19	Wk 20	Wk 21	Wk 22	Wk 23	Wk 24	Wk 25	Wk 26	Wk 27	Wk 28	Wk 29	Wk 30	Wk 31	Wk 32	Wk 33	Wk 34
Inspection	1	2	3	4	5	6	7	8	9	10	11	12	13	14	15	16	17	18	19	20	21	22	23	24	25	26	27	28	29	30	31	32	33	34
Project yard(s) layout and make ready for construction	1	2	3	4	5	6	7	8	9	10	11	12	13	14	15	16																		
Receipt and storage and Project materials	1	2	3	4	5	6	7	8	9	10	11	12	13	14	15	16	17	18	19	20	21	22	23	24	25	26	27	28	29	30	31	32	33	34
Survey and stake access roads and work areas									1	2	3	4	5	6	7	8	9	10	11	12	13	14	15	16	17	18	19	20	21	22	23	24	25	26
Construct access roads and structure pads											1	2	3	4	5	6	7	8	9	10	11	12	13	14	15	16	17	18	19	20	21	22	23	24
Tree clearing																																		
Install foundations																			1	2	3	4	5	6	7	8	9	10	11	12	13	14	15	16
Haul and assemble structures																										1	2	3	4	5	6	7	8	9
Erect structures																																		
Install overhead optical ground wire, overhead ground wire, and conductors																																		
Cleanup and restoration																																		

Spread 2 – 103 Miles (U242, U280, U285, U300, U400, U401, U404, U406)	**2015**																																		
	Month 1				**Month 2**				**Month 3**					**Month 4**				**Month 5**				**Month 6**					**Month 7**				**Month 8**			
	1/3	1/10	1/17	1/24	1/31	2/7	2/14	2/21	2/28	3/7	3/14	3/21	3/28	4/4	4/11	4/18	4/25	5/2	5/9	5/16	5/23	5/30	6/6	6/13	6/20	6/27	7/4	7/11	7/18	7/25	8/1	8/8	8/15	8/22
	6	12	18	24	30	36	42	48	54	60	66	72	78	84	90	96	102	108	114	120	126	132	138	144	150	156	162	168	174	180	186	192	198	204
	Wk 1	Wk 2	Wk 3	Wk 4	Wk 5	Wk 6	Wk 7	Wk 8	Wk 9	Wk 10	Wk 11	Wk 12	Wk 13	Wk 14	Wk 15	Wk 16	Wk 17	Wk 18	Wk 19	Wk 20	Wk 21	Wk 22	Wk 23	Wk 24	Wk 25	Wk 26	Wk 27	Wk 28	Wk 29	Wk 30	Wk 31	Wk 32	Wk 33	Wk 34
Inspection														1	2	3	4	5	6	7	8	9	10	11	12	13	14	15	16	17	18	19	20	21
Project yard(s) layout and make ready for construction														1	2	3	4	5	6	7	8	9	10	11	12	13	14	15	16					
Receipt and storage and project materials														1	2	3	4	5	6	7	8	9	10	11	12	13	14	15	16	17	18	19	20	21
Survey and stake access roads and work areas																							1	2	3	4	5	6	7	8	9	10	11	12
Construct access roads and structure pads																											1	2	3	4	5	6	7	8
Tree clearing																					1	2	3	4	5	6	7	8	9	10	11	12	13	14
Install foundations																																		1
Haul and assemble structures																																		
Erect structures																																		
Install overhead optical ground wire, overhead ground wire, and conductors																																		
Cleanup and restoration																																		

Spread 3 – 76 Miles (U525, U435, U545, U546, U548, U600, U636, U637, U639, U650, U640)	**2015**																																		
	Month 1				**Month 2**				**Month 3**					**Month 4**				**Month 5**				**Month 6**					**Month 7**				**Month 8**			
	1/3	1/10	1/17	1/24	1/31	2/7	2/14	2/21	2/28	3/7	3/14	3/21	3/28	4/4	4/11	4/18	4/25	5/2	5/9	5/16	5/23	5/30	6/6	6/13	6/20	6/27	7/4	7/11	7/18	7/25	8/1	8/8	8/15	8/22
	6	12	18	24	30	36	42	48	54	60	66	72	78	84	90	96	102	108	114	120	126	132	138	144	150	156	162	168	174	180	186	192	198	204
	Wk 1	Wk 2	Wk 3	Wk 4	Wk 5	Wk 6	Wk 7	Wk 8	Wk 9	Wk 10	Wk 11	Wk 12	Wk 13	Wk 14	Wk 15	Wk 16	Wk 17	Wk 18	Wk 19	Wk 20	Wk 21	Wk 22	Wk 23	Wk 24	Wk 25	Wk 26	Wk 27	Wk 28	Wk 29	Wk 30	Wk 31	Wk 32	Wk 33	Wk 34
Inspection																															1	2	3	4
Project yard(s) layout and make ready for construction																															1	2	3	4
Receipt and storage and Project materials																															1	2	3	4
Survey and stake access roads and work areas																																		
Construct access roads and structure pads																																		
Tree clearing																																		
Install foundations																																		
Haul and assemble structures																																		
Erect structures																																		
Install overhead optical ground wire, overhead ground wire, and conductors																																		
Cleanup and restoration																																		

Table 8b
Project Duration Schedule – Months 9 to 16

Spread 1 – 228 Miles (W15, W21, W35, W36, W30, W32, W101, W125, W108, W116, W113, W410, W411, C31, C61, C91, C175, C186, C188)	**2015**																		**2016**																
	Month 9					**Month 10**				**Month 11**				**Month 12**					**Month 13**				**Month 14**				**Month 15**					**Month 16**			
	8/29	9/5	9/12	9/19	9/26	10/3	10/10	10/17	10/24	10/31	11/7	11/14	11/21	11/28	12/5	12/12	12/19	12/26	1/2	1/9	1/16	1/23	1/30	2/6	2/13	2/20	2/27	3/5	3/12	3/19	3/26	4/2	4/9	4/16	4/23
	210	216	222	228	234	240	246	252	258	264	270	276	282	288	294	300	306	312	318	324	330	336	342	348	354	360	366	372	378	384	390	396	402	408	414
	Wk 35	Wk 36	Wk 37	Wk 38	Wk 39	Wk 40	Wk 41	Wk 42	Wk 43	Wk 44	Wk 45	Wk 46	Wk 47	Wk 48	Wk 49	Wk 50	Wk 51	Wk 52	Wk 53	Wk 54	Wk 55	Wk 56	Wk 57	Wk 58	Wk 59	Wk 60	Wk 61	Wk 62	Wk 63	Wk 64	Wk 65	Wk 66	Wk 67	Wk 68	Wk 69
Inspection	35	36	37	38	39	40	41	42	43	44	45	46	47	48	49	50	51	52	53	54	55	56	57	58	59	60	61	62	63	64	65	66	67	68	69
Project yard(s) layout and make ready for construction	35	36	37	38	39	40	41	42	43	44	45	46	47																						
Receipt and storage and Project materials														48	49	50	51	52	53	54	55	56	57	58	59	60	61	62	63	64	65	66	67	68	69
Survey and stake access roads and work areas	35	36	37	38	39	40	41	42	43	44	45	46	47	40	41	42	43	44	45	46	47	48	49	50	51	52	53	54	55	56	57	58	59	60	61
Construct access roads and structure pads	27	28	29	30	31	32	33	34	35	36	37	38	39	38	39	40	41	42	43	44	45	46	47	48	49	50	51	52	53	54	55	56	57	58	59
Tree clearing	25	26	27	28	29	30	31	32	33	34	35	36	37																						
Install foundations														30	31	32	33	34	35	36	37	38	39	40	41	42	43	44	45	46	47	48	49	50	51
Haul and assemble structures	17	18	19	20	21	22	23	24	25	26	27	28	29	23	24	25	26	27	28	29	30	31	32	33	34	35	36	37	38	39	40	41	42	43	44
Erect structures	10	11	12	13	14	15	16	17	18	19	20	21	22	10	11	12	13	14	15	16	17	18	19	20	21	22	23	24	25	26	27	28	29	30	31
Install overhead optical ground wire, overhead ground wire, and conductors					1	2	3	4	5	6	7	8	9	2	3	4	5	6	7	8	9	10	11	12	13	14	15	16	17	18	19	20	21	22	23
Cleanup and restoration													1												1	2	3	4	5	6	7	8	9	10	11

Spread 2 – 103 Miles (U242, U280, U285, U300, U400, U401, U404, U406)	**2015**																		**2016**																
	Month 9					**Month 10**				**Month 11**				**Month 12**					**Month 13**				**Month 14**				**Month 15**					**Month 16**			
	8/29	9/5	9/12	9/19	9/26	10/3	10/10	10/17	10/24	10/31	11/7	11/14	11/21	11/28	12/5	12/12	12/19	12/26	1/2	1/9	1/16	1/23	1/30	2/6	2/13	2/20	2/27	3/5	3/12	3/19	3/26	4/2	4/9	4/16	4/23
	210	216	222	228	234	240	246	252	258	264	270	276	282	288	294	300	306	312	318	324	330	336	342	348	354	360	366	372	378	384	390	396	402	408	414
	Wk 35	Wk 36	Wk 37	Wk 38	Wk 39	Wk 40	Wk 41	Wk 42	Wk 43	Wk 44	Wk 45	Wk 46	Wk 47	Wk 48	Wk 49	Wk 50	Wk 51	Wk 52	Wk 53	Wk 54	Wk 55	Wk 56	Wk 57	Wk 58	Wk 59	Wk 60	Wk 61	Wk 62	Wk 63	Wk 64	Wk 65	Wk 66	Wk 67	Wk 68	Wk 69
Inspection	22	23	24	25	26	27	28	29	30	31	32	33	34	35	36	37	38	39	40	41	42	43	44	45	46	47	48	49	50	51	52	53	54	55	56
Project yard(s) layout and make ready for construction																																			
Receipt and storage and Project materials	22	23	24	25	26	27	28	29	30	31	32	33	34	35	36	37	38	39	40	41	42	43	44	45	46	47	48	49	50	51	52	53	54	55	56
Survey and stake access roads and work areas	13	14	15	16	17	18	19	20	21	22	23	24	25	26	27	28	29	30	31	32	33	34	35	36	37	38	39	40	41	42	43	44	45	46	47
Construct access roads and structure pads	9	10	11	12	13	14	15	16	17	18	19	20	21	22	23	24	25	26	27	28	29	30	31	32	33	34	35	36	37	38	39	40	41	42	43
Tree clearing	15	16	17	18	19	20	21																												
Install foundations	2	3	4	5	6	7	8	9	10	11	12	13	14	15	16	17	18	19	20	21	22	23	24	25	26	27	28	29	30	31	32	33	34	35	36
Haul and assemble structures							1	2	3	4	5	6	7	8	9	10	11	12	13	14	15	16	17	18	19	20	21	22	23	24	25	26	27	28	29
Erect structures																1	2	3	4	5	6	7	8	9	10	11	12	13	14	15	16	17	18	19	20
Install overhead optical ground wire, overhead ground wire, and conductors																											1	2	3	4	5	6	7	8	9
Cleanup and restoration																																			

Spread 3 – 76 Miles (U525, U435, U545, U546, U548, U600, U636, U637, U639, U650, U640)	**2015**																		**2016**																
	Month 9					**Month 10**				**Month 11**				**Month 12**					**Month 13**				**Month 14**				**Month 15**					**Month 16**			
	8/29	9/5	9/12	9/19	9/26	10/3	10/10	10/17	10/24	10/31	11/7	11/14	11/21	11/28	12/5	12/12	12/19	12/26	1/2	1/9	1/16	1/23	1/30	2/6	2/13	2/20	2/27	3/5	3/12	3/19	3/26	4/2	4/9	4/16	4/23
	210	216	222	228	234	240	246	252	258	264	270	276	282	288	294	300	306	312	318	324	330	336	342	348	354	360	366	372	378	384	390	396	402	408	414
	Wk 35	Wk 36	Wk 37	Wk 38	Wk 39	Wk 40	Wk 41	Wk 42	Wk 43	Wk 44	Wk 45	Wk 46	Wk 47	Wk 48	Wk 49	Wk 50	Wk 51	Wk 52	Wk 53	Wk 54	Wk 55	Wk 56	Wk 57	Wk 58	Wk 59	Wk 60	Wk 61	Wk 62	Wk 63	Wk 64	Wk 65	Wk 66	Wk 67	Wk 68	Wk 69
Inspection	5	6	7	8	9	10	11	12	13	14	15	16	17	18	19	20	21	22	23	24	25	26	27	28	29	30	31	32	33	34	35	36	37	38	39
Project yard(s) layout and make ready for construction	5	6	7	8	9	10	11	12	13	14	15	16																							
Receipt and storage and Project materials	5	6	7	8	9	10	11	12	13	14	15	16	17	18	19	20	21	22	23	24	25	26	27	28	29	30	31	32	33	34	35	36	37	38	39
Survey and stake access roads and work areas	1	2	3	4	5	6	7	8	9	10	11	12	13	14	15	16	17	18	19	20	21	22	23	24	25	26	27	28	29	30	31	32	33	34	35
Construct access roads and structure pads								1	2	3	4	5	6	7	8	9	10	11	12	13	14	15	16	17	18	19	20	21	22	23	24	25	26	27	28
Tree clearing																			1	2	3	4	5	6	7	8	9	10	11	12	13	14	15	16	17
Install foundations																																			
Haul and assemble structures																																			
Erect structures																																			
Install overhead optical ground wire, overhead ground wire, and conductors																																			
Cleanup and restoration																																			

Table 8c
Project Duration Schedule – Months 17 to 24

Spread 1 – 228 Miles (W15, W21, W35, W36, W30, W32, W101, W125, W108, W116, W113, W410, W411, C31, C61, C91, C175, C186, C188)	**2016**																																		
	Month 17				**Month 18**					**Month 19**				**Month 20**				**Month 21**					**Month 22**				**Month 23**				**Month 24**				
	4/30	5/7	5/14	5/21	5/28	6/4	6/11	6/18	6/25	7/2	7/9	7/16	7/23	7/30	8/6	8/13	8/20	8/27	9/3	9/10	9/17	9/24	10/1	10/8	10/15	10/22	10/29	11/5	11/12	11/19	11/26	12/3	12/10	12/17	12/24
	420	426	432	438	444	450	456	462	468	474	480	486	492	498	504	510	516	522	528	534	540	546	552	558	564	570	576	582	588	594	600	606	612	618	624
	Wk 70	Wk 71	Wk 72	Wk 73	Wk 74	Wk 75	Wk 76	Wk 77	Wk 78	Wk 79	Wk 80	Wk 81	Wk 82	Wk 83	Wk 84	Wk 85	Wk 86	Wk 87	Wk 88	Wk 89	Wk 90	Wk 91	Wk 92	Wk 93	Wk 94	Wk 95	Wk 96	Wk 97	Wk 98	Wk 99	Wk 100	Wk 101	Wk 102	Wk 103	Wk 104
Inspection	70	71	72	73	74	75	76	77	78	79	80	81	82	83	84	85	86	87	88	89	90	91	92	93	94	95	96	97	98	99	100	101	102	103	104
Project yard(s) layout and make ready for construction																																			
Receipt and storage and Project materials	70	71	72	73	74	75	76	77	78	79	80	81	82	83	84	85	86	87	88	89	90	91	92	93	94	95	96	97	98	99	100	101	102	103	104
Survey and stake access roads and work areas	62	63	64	65	66	67	68	69	70	71	72	73	74	75	76	77	78	79	80	81	82	83	84	85											
Construct access roads and structure pads	60	61	62	63	64	65	66	67	68	69	70	71	72	73	74	75	76	77	78	79	80	81	82	83	84	85									
Tree clearing																																			
Install foundations	52	53	54	55	56	57	58	59	60	61	62	63	64	65	66	67	68	69	70	71	72	73	74	75	76	77	78	79	80	81	82	83	84		
Haul and assemble structures	45	46	47	48	49	50	51	52	53	54	55	56	57	58	59	60	61	62	63	64	65	66	67	68	69	70	71	72	73	74	75	76	77	78	79
Erect structures	32	33	34	35	36	37	38	39	40	41	42	43	44	45	46	47	48	49	50	51	52	53	54	55	56	57	58	59	60	61	62	63	64	65	66
Install overhead optical ground wire, overhead ground wire, and conductors	24	25	26	27	28	29	30	31	32	33	34	35	36	37	38	39	40	41	42	43	44	45	46	47	48	49	50	51	52	53	54	55	56	57	58
Cleanup and restoration	12	13	14	15	16	17	18	19	20	21	22	23	24	25	26	27	28	29	30	31	32	33	34	35	36	37	38	39	40	41	42	43	44	45	46

Spread 2 – 103 Miles (U242, U280, U285, U300, U400, U401, U404, U406)	**2016**																																		
	Month 17				**Month 18**					**Month 19**				**Month 20**				**Month 21**					**Month 22**				**Month 23**				**Month 24**				
	4/30	5/7	5/14	5/21	5/28	6/4	6/11	6/18	6/25	7/2	7/9	7/16	7/23	7/30	8/6	8/13	8/20	8/27	9/3	9/10	9/17	9/24	10/1	10/8	10/15	10/22	10/29	11/5	11/12	11/19	11/26	12/3	12/10	12/17	12/24
	420	426	432	438	444	450	456	462	468	474	480	486	492	498	504	510	516	522	528	534	540	546	552	558	564	570	576	582	588	594	600	606	612	618	624
	Wk 70	Wk 71	Wk 72	Wk 73	Wk 74	Wk 75	Wk 76	Wk 77	Wk 78	Wk 79	Wk 80	Wk 81	Wk 82	Wk 83	Wk 84	Wk 85	Wk 86	Wk 87	Wk 88	Wk 89	Wk 90	Wk 91	Wk 92	Wk 93	Wk 94	Wk 95	Wk 96	Wk 97	Wk 98	Wk 99	Wk 100	Wk 101	Wk 102	Wk 103	Wk 104
Inspection	57	58	59	60	61	62	63	64	65	66	67	68	69	70	71	72	73	74	75	76	77	78	79	80	81	82	83	84	85	86	87	88	89	90	91
Project yard(s) layout and make ready for construction																																			
Receipt and storage and Project materials	57	58	59	60	61	62	63	64	65	66	67	68	69	70	71	72	73	74	75	76	77	78	79	80	81	82									
Survey and stake access roads and work areas																																			
Construct access roads and structure pads	44	45	46	47																															
Tree clearing																																			
Install foundations	37	38	39	40	41	42																													
Haul and assemble structures	30	31	32	33	34	35	36	37	38	39	40	41	42																						
Erect structures	21	22	23	24	25	26	27	28	29	30	31	32	33	34	35	36	37																		
Install overhead optical ground wire, overhead ground wire, and conductors	10	11	12	13	14	15	16	17	18	19	20	21	22	23	24	25	26	27	28	29	30	31	32	33	34	35									
Cleanup and restoration			1	2	3	4	5	6	7	8	9	10	11	12	13	14	15	16	17	18	19	20	21	22	23	24	25	26	27	28	29	30	31	32	33

Spread 3 – 76 Miles (U525, U435, U545, U546, U548, U600, U636, U637, U639, U650, U640)	**2016**																																		
	Month 17				**Month 18**					**Month 19**				**Month 20**				**Month 21**					**Month 22**				**Month 23**				**Month 24**				
	4/30	5/7	5/14	5/21	5/28	6/4	6/11	6/18	6/25	7/2	7/9	7/16	7/23	7/30	8/6	8/13	8/20	8/27	9/3	9/10	9/17	9/24	10/1	10/8	10/15	10/22	10/29	11/5	11/12	11/19	11/26	12/3	12/10	12/17	12/24
	420	426	432	438	444	450	456	462	468	474	480	486	492	498	504	510	516	522	528	534	540	546	552	558	564	570	576	582	588	594	600	606	612	618	624
	Wk 70	Wk 71	Wk 72	Wk 73	Wk 74	Wk 75	Wk 76	Wk 77	Wk 78	Wk 79	Wk 80	Wk 81	Wk 82	Wk 83	Wk 84	Wk 85	Wk 86	Wk 87	Wk 88	Wk 89	Wk 90	Wk 91	Wk 92	Wk 93	Wk 94	Wk 95	Wk 96	Wk 97	Wk 98	Wk 99	Wk 100	Wk 101	Wk 102	Wk 103	Wk 104
Inspection	40	41	42	43	44	45	46	47	48	49	50	51	52	53	54	55	56	57	58	59	60	61	62	63	64	65	66	67	68	69	70	71	72	73	74
Project yard(s) layout and make ready for construction																																			
Receipt and storage and Project materials	40	41	42	43	44	45	46	47	48	49	50	51	52	53	54	55	56	57	58	59	60	61	62	63	64	65	66	67	68	69	70	71	72	73	74
Survey and stake access roads and work areas	36	37	38	39	40	41	42	43	44																										
Construct access roads and structure pads	29	30	31	32	33	34	35	36	37	38	39	40	41	42	43	44																			
Tree clearing	18	19	20	21	22	23	24	25	26	27	28	29	30	31	32																				
Install foundations							1	2	3	4	5	6	7	8	9	10	11	12	13	14	15	16	17	18	19	20	21	22	23	24	25	26	27	28	29
Haul and assemble structures														1	2	3	4	5	6	7	8	9	10	11	12	13	14	15	16	17	18	19	20	21	22
Erect structures																						1	2	3	4	5	6	7	8	9	10	11	12	13	14
Install overhead optical ground wire, overhead ground wire, and conductors																											1	2	3	4	5	6	7	8	9
Cleanup and restoration																																			

Table 8d
Project Duration Schedule – Months 25 to 32

Spread 1 – 228 Miles (W15, W21, W35, W36, W30, W32, W101, W125, W108, W116, W113, W410, W411, C31, C61, C91, C175, C186, C188)	**2017**																																	
	Month 25				**Month 26**				**Month 27**					**Month 28**				**Month 29**				**Month 30**					**Month 31**				**Month 32**			
	12/31	1/7	1/14	1/21	1/28	2/4	2/11	2/18	2/25	3/4	3/11	3/18	3/25	4/1	4/8	4/15	4/22	4/29	5/6	5/13	5/20	5/27	6/3	6/10	6/17	6/24	7/1	7/8	7/15	7/22	7/29	8/5	8/12	8/19
	630	636	642	648	654	660	666	672	678	684	690	696	702	708	714	720	726	732	738	744	750	756	762	768	774	780	786	792	798	804	810	816	822	828
	Wk 105	Wk 106	Wk 107	Wk 108	Wk 109	Wk 110	Wk 111	Wk 112	Wk 113	Wk 114	Wk 115	Wk 116	Wk 117	Wk 118	Wk 119	Wk 120	Wk 121	Wk 122	Wk 123	Wk 124	Wk 125	Wk 126	Wk 127	Wk 128	Wk 129	Wk 130	Wk 131	Wk 132	Wk 133	Wk 134	Wk 135	Wk 136	Wk 137	Wk 138
Inspection	105	106	107	108	109	110	111	112	113	114	115	116	117	118	119	120	121																	
Project yard(s) layout and make ready for construction																																		
Receipt and storage and Project materials	105	106	107	108	109	110	111	112	113	114																								
Survey and stake access roads and work areas																																		
Construct access roads and structure pads																																		
Tree clearing																																		
Install foundations																																		
Haul and assemble structures	80	81	82	83	84																													
Erect structures	67	68	69	70	71	72																												
Install overhead optical ground wire, overhead ground wire, and conductors	59	60	61	62	63	64	65	66	67	68																								
Cleanup and restoration	47	48	49	50	51	52	53	54	55	56	57	58	59	60	61	62	63																	

Spread 2 – 103 Miles (U242, U280, U285, U300, U400, U401, U404, U406)	**2017**																																	
	Month 25				**Month 26**				**Month 27**					**Month 28**				**Month 29**				**Month 30**					**Month 31**				**Month 32**			
	12/31	1/7	1/14	1/21	1/28	2/4	2/11	2/18	2/25	3/4	3/11	3/18	3/25	4/1	4/8	4/15	4/22	4/29	5/6	5/13	5/20	5/27	6/3	6/10	6/17	6/24	7/1	7/8	7/15	7/22	7/29	8/5	8/12	8/19
	630	636	642	648	654	660	666	672	678	684	690	696	702	708	714	720	726	732	738	744	750	756	762	768	774	780	786	792	798	804	810	816	822	828
	Wk 105	Wk 106	Wk 107	Wk 108	Wk 109	Wk 110	Wk 111	Wk 112	Wk 113	Wk 114	Wk 115	Wk 116	Wk 117	Wk 118	Wk 119	Wk 120	Wk 121	Wk 122	Wk 123	Wk 124	Wk 125	Wk 126	Wk 127	Wk 128	Wk 129	Wk 130	Wk 131	Wk 132	Wk 133	Wk 134	Wk 135	Wk 136	Wk 137	Wk 138
Inspection																																		
Project yard(s) layout and make ready for construction																																		
Receipt and storage and Project materials																																		
Survey and stake access roads and work areas																																		
Construct access roads and structure pads																																		
Tree clearing																																		
Install foundations																																		
Haul and assemble structures																																		
Erect structures																																		
Install overhead optical ground wire, overhead ground wire, and conductors																																		
Cleanup and restoration																																		

Spread 3 – 76 Miles (U525, U435, U545, U546, U548, U600, U636, U637, U639, U650, U640)	**2017**																																	
	Month 25				**Month 26**				**Month 27**					**Month 28**				**Month 29**				**Month 30**					**Month 31**				**Month 32**			
	12/31	1/7	1/14	1/21	1/28	2/4	2/11	2/18	2/25	3/4	3/11	3/18	3/25	4/1	4/8	4/15	4/22	4/29	5/6	5/13	5/20	5/27	6/3	6/10	6/17	6/24	7/1	7/8	7/15	7/22	7/29	8/5	8/12	8/19
	630	636	642	648	654	660	666	672	678	684	690	696	702	708	714	720	726	732	738	744	750	756	762	768	774	780	786	792	798	804	810	816	822	828
	Wk 105	Wk 106	Wk 107	Wk 108	Wk 109	Wk 110	Wk 111	Wk 112	Wk 113	Wk 114	Wk 115	Wk 116	Wk 117	Wk 118	Wk 119	Wk 120	Wk 121	Wk 122	Wk 123	Wk 124	Wk 125	Wk 126	Wk 127	Wk 128	Wk 129	Wk 130	Wk 131	Wk 132	Wk 133	Wk 134	Wk 135	Wk 136	Wk 137	Wk 138
Inspection	75	76	77	78	79	80	81	82	83	84	85	86	87	88	89	90	91	92	93	94	95	96	97	98	99	100	101	102	103	104	105	106	107	
Project yard(s) layout and make ready for construction																																		
Receipt and storage and Project materials	75	76	77	78	79	80	81	82	83	84	85	86	87	88	89	90	91	92	93	94	95	96	97	98										
Survey and stake access roads and work areas																																		
Construct access roads and structure pads																																		
Tree clearing																																		
Install foundations	30	31	32	33																														
Haul and assemble structures	23	24	25	26	27	28	29	30	31	32	33																							
Erect structures	15	16	17	18	19	20	21	22	23	24	25	26	27	28																				
Install overhead optical ground wire, overhead ground wire, and conductors	10	11	12	13	14	15	16	17	18	19	20	21	22	23	24	25	26	27	28	29	30	31	32	33										
Cleanup and restoration	1	2	3	4	5	6	7	8	9	10	11	12	13	14	15	16	17	18	19	20	21	22	23	24	25	26	27	28	29	30	31	32	33	

4 SYSTEM OPERATION AND MAINTENANCE

The 500kV transmission lines to be constructed as part of the Project comprise critical infrastructure of the Company's transmission system, and of the western U.S. electrical grid. Limiting the duration of unplanned outages and planning for the use of live-line maintenance techniques to minimize the requirement for any outages is an important part of the design, construction, and operation/maintenance requirements for this Project.

Operation and maintenance activities would be performed in accordance with direction in the approved Construction POD and right-of-way grant.

4.1 Routine System Operation and Maintenance

The goal of the Company is to provide its customers with a reliable supply of electricity while maintaining the overall integrity of the regional electrical grid. The Company's obligation to maintain reliable operation of the electrical system is documented in the Company's agreements with the various states through the Public Service Commissions and is directed through compliance with industry standard codes and practices such as the National Electrical Safety Code (ANSI C2), which governs the design and operation of high-voltage electric-utility systems.

In 2005, Congress passed the Energy Policy Act of 2005, which provided a regulatory basis for the implementation of specific incentives (and penalties) for maintaining reliable service, among other issues. As a result of the passage of the Act, the Federal Energy Regulatory Commission selected the NERC to act as the enforcement agency for compliance with electric utility reliability and operating standards, among other issues. The Company is required to be in compliance with the various reliability standards promulgated through the implementation of the NERC policies and procedures. Additionally, the Company is governed by the WECC standards that may be in addition to or more stringent than those currently required by NERC. In response, the Company has prepared internal operation and maintenance policies and procedures designed to meet the requirements of the NERC, WECC, and the state public utility commissions, while remaining in compliance with the applicable codes and standards with respect to maintaining the reliability of the electrical system.

Operation and maintenance activities would include transmission line patrols, climbing inspections, structure and wire inspection and maintenance, insulator washing in selected areas as needed, and access roads repairs. The Company would keep necessary work areas around structures clear of vegetation and would limit the height of vegetation along the right-of-way. Periodic inspection and maintenance of each of the substations and communications facilities is also a key part of operating and maintaining the electrical system. The following sections provide details on the anticipated operation and maintenance activities for Gateway South.

After the transmission line has been energized, land uses that are compatible with safety regulations would be permitted in and adjacent to the right-of-way. Existing land uses such as agriculture and grazing are generally permitted within the right-of-way. Incompatible land uses within the right-of-way include construction and maintenance of inhabited dwellings and any use requiring changes in surface elevation that would affect electrical clearances of existing or planned facilities.

Land uses that comply with local regulations would be permitted adjacent to the right-of-way. Compatible uses of the right-of-way on public lands would have to be approved by the appropriate agency. Permission to use the easement on private lands would have to be obtained from the utility owning the transmission line.

4.1.1 Routine System Inspection, Maintenance, and Repair

Regular inspection of transmission lines, substations, and support systems is critical for safe, efficient, and economical operation of the Project.

4.1.2 Transmission Line Maintenance

Regular ground and aerial inspections would be performed in accordance with the Company's established policies and procedures for transmission line inspection and maintenance. The Company's transmission lines and substations would be inspected for corrosion, equipment misalignment, loose fittings, vandalism, and other mechanical problems. The need for vegetation management would also be determined during inspection patrols.

Inspection of the entire transmission line system would be conducted three times annually. Aerial inspection would be conducted by helicopter on an annual basis and would require two or three crew members, including the pilot. Detailed ground inspections would take place on a semi-annual basis using existing access roads to each structure. Ground inspection would use four-wheel-drive trucks or four-wheel-drive ATVs. The inspector would assess the condition of the transmission line and hardware to determine if any components need to be repaired or replaced, or if other conditions exist that require maintenance or modification activities. The inspector also would note any unauthorized encroachments and trash dumping on the right-of-way that could constitute a safety hazard. The inspector would access each of the structure locations along each line and use binoculars and spotting scopes to perform this inspection.

4.1.3 Hardware Maintenance and Repairs

Routine maintenance activities are ordinary maintenance tasks that historically have been performed and are regularly carried out on a routine basis. The work performed typically is repair or replacement of individual components (no new ground disturbance), performed by relatively small crews using a minimum of equipment, and usually is conducted within a period from a few hours up to a few days. Work requires access to the damaged portion of the line to allow for a safe and efficient repair of the facility. Equipment required for this work may include four-wheel-drive trucks, material (flatbed) trucks, cranes, bucket trucks (low-reach), boom trucks (high-reach), or man lifts. This work is scheduled and typically is required due to issues found during inspections. Typical items that may require periodic replacement on a 500kV structure include insulators, hardware, or structure members. It is expected that these replacements would be required infrequently. Guys will be inspected during routine annual inspections for the transmission line. Occasionally, guys may need to be tightened. This maintenance will be conducted during routine annual maintenance. The presence of guys will have no additional impact associated with ongoing operations and maintenance.

The Company plans to conduct maintenance on the critical 500kV and 345kV system using live-line maintenance techniques. Maintenance on the transmission lines can be completed safely using live-line techniques, thereby avoiding an outage to the critical transmission-line infrastructure. High-reach bucket trucks along with other equipment are used to conduct these activities.

For the 345kV and 500kV structures, this requires that adequate space be available at each structure site so that the high reach bucket truck can be positioned to one side or the other of the structure and reach up and over the lower phases to access the upper center phase for live-line maintenance procedures.

For the 345kV H-frame structures, this requires that adequate space be available at each structure site so that a bucket truck can be positioned to access the outside phases. To allow room at each structure for

these activities, in low-slope areas, a pad area of 250 feet (right-of-way width) by 140 feet is required with the structure in the center for the single-circuit 500kV structure, and 150 by 100 feet for the 345kV H-frame structure. Figures 14 and 15 depict the space requirements for live-line maintenance. The size and location of these required pads near the structures may vary depending on the side slope and access road at each site. The work areas and pads would be cleared to the extent needed to safely complete the work. These pads would remain in place after construction, but would be revegetated after the construction has been completed.

4.1.4 Access Road and Work Area Repair

Right-of-way repairs include grading, vegetation management of existing maintenance access roads and work areas, and spot repair of sites subject to flooding or scouring. All road-maintenance standards, such as maintaining cross-road drainage and replacing road-drainage structures, would be compliant with those of the agency managing the land. Required equipment may include a grader, backhoe, four-wheel-drive pickup truck, and a cat-loader or bulldozer. The cat-loader has steel tracks whereas the grader, backhoe, and truck typically have rubber tires. Repair of the right-of-way would be scheduled as a result of line inspections, or would occur in response to an emergency situation. Scheduling of these activities would attempt to adhere to specific biological seasonal restriction timeframes identified in the Construction POD and would be coordinated ahead of time with land-management agency unless it is an emergency situation.

4.1.5 Vegetation Management

The Company must maintain work areas adjacent to electrical transmission structures and along the right-of-way for vehicle and equipment access required for operations, maintenance, and repair, including for live-line maintenance activities as described above under Section 4.1.3 – Hardware Maintenance and Repairs. Shrubs and other obstructions would be removed regularly near structures to facilitate inspection and maintenance of equipment and to ensure system reliability.

Vegetation management practices along the right-of-way would be in accordance with the Company clearing specifications and vegetation management plans (PacifiCorp 2007). Much of the transmission-line alternative routes traverse arid country characterized by low-growing vegetation, while higher elevations receive more precipitation and exhibit more vegetation. The wire-border zone method to controlling vegetation is an approach used by the Company (PacifiCorp 2007). This method results in two zones of clearing and revegetation. The wire zone is the linear area along the right-of-way under the wires and extending 10 feet outside of the outermost phase conductor. After initial clearing, vegetation in the wire zone would be maintained to consist of native grasses, legumes, herbs, ferns, and other low-growing shrubs that remain under 5-feet tall at maturity. The border zone is the linear area along each side of the right-of-way extending from the wire zone to the edge of the right-of-way.

Vegetation in the border zone would be maintained to consist of tall shrubs or short trees (up to 25-feet tall at maturity), grasses, and forbs. These cover/herbaceous plants benefit the right-of-way by competing with and excluding undesirable plants. The width of the wire and border zones is depicted in Figure 16 for the 345kV H-frame and 500kV single-circuit structure line segments. During operations, vegetation growth would be monitored and managed to maintain the wire-border zone objectives. When conductor ground clearance is greater than 50 feet, for example a canyon or ravine crossing with high ground clearance at mid-span, trees and shrubs would be left in place as long as the conductor clearance to the vegetation tops is 50 feet or more (Figure 17).

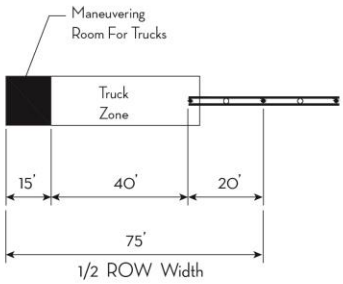

Section A-A
N.T.S.

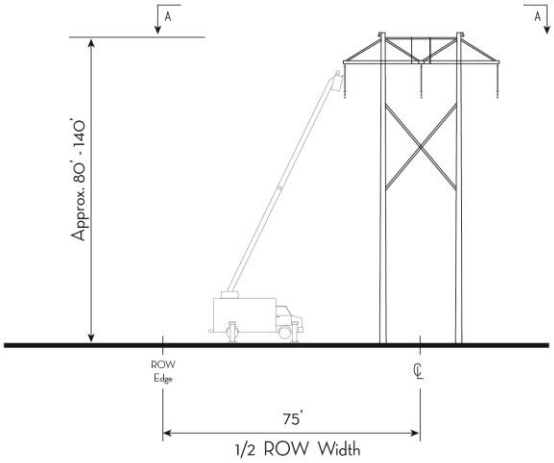

Profile
N.T.S.

Figure 14 Live-line Maintenance Space Requirements, Single-circuit 345-kilovolt Line

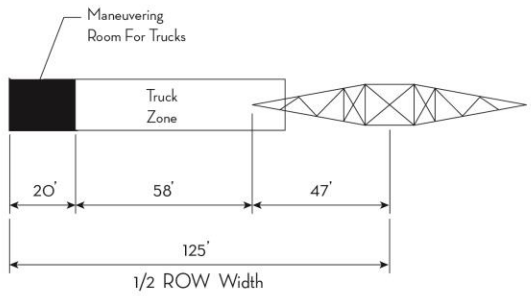

Section A-A
N.T.S.

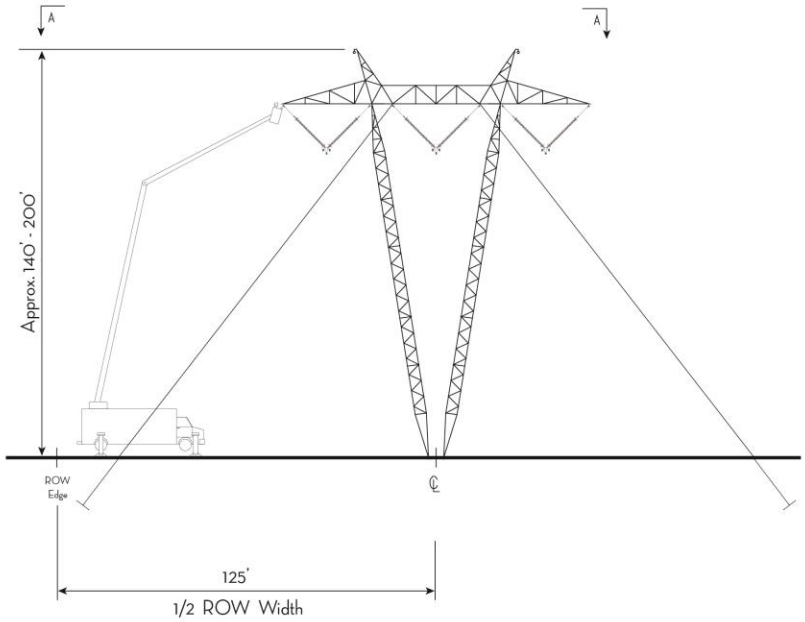

Profile
N.T.S.

Figure 15 Live-line Maintenance Space Requirements, Single-circuit 500-kilovolt Line

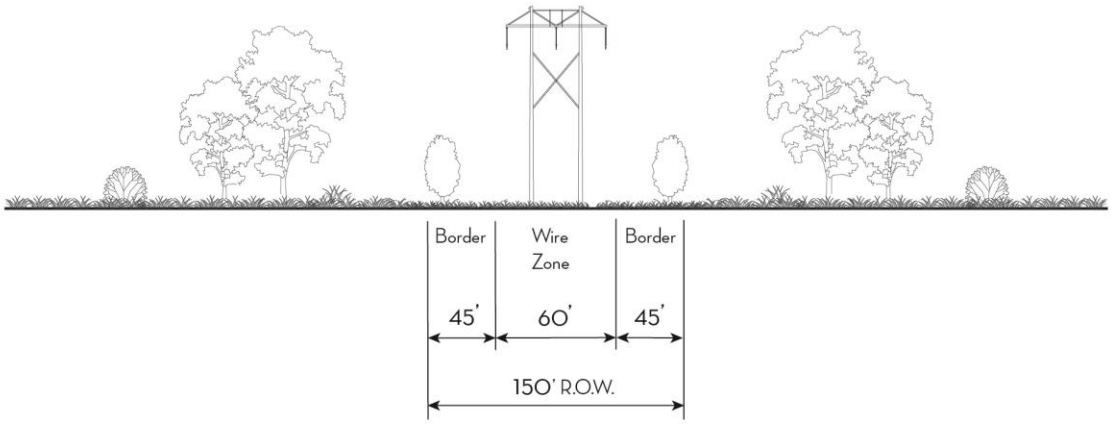

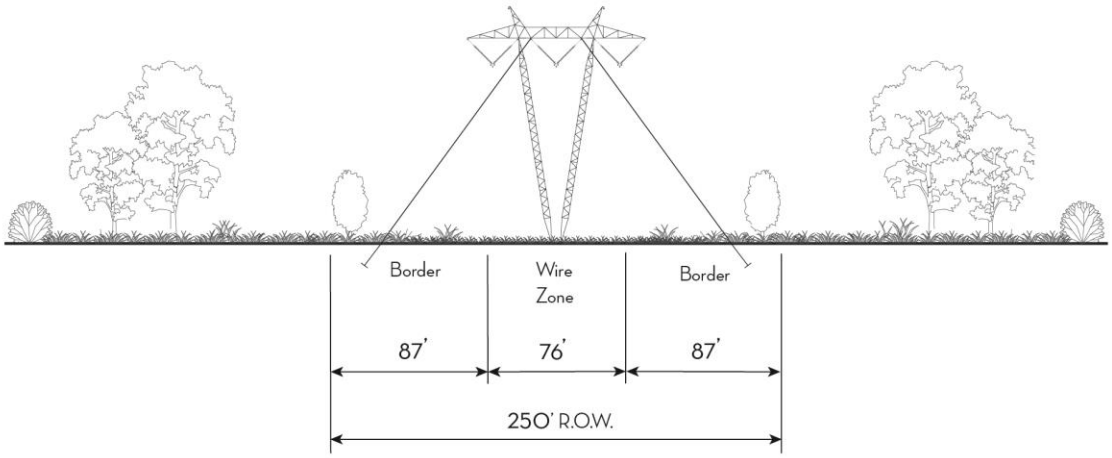

Figure 16 Single-circuit 345-kilovolt Line (top), Single-circuit 500-kilovolt Line (bottom)

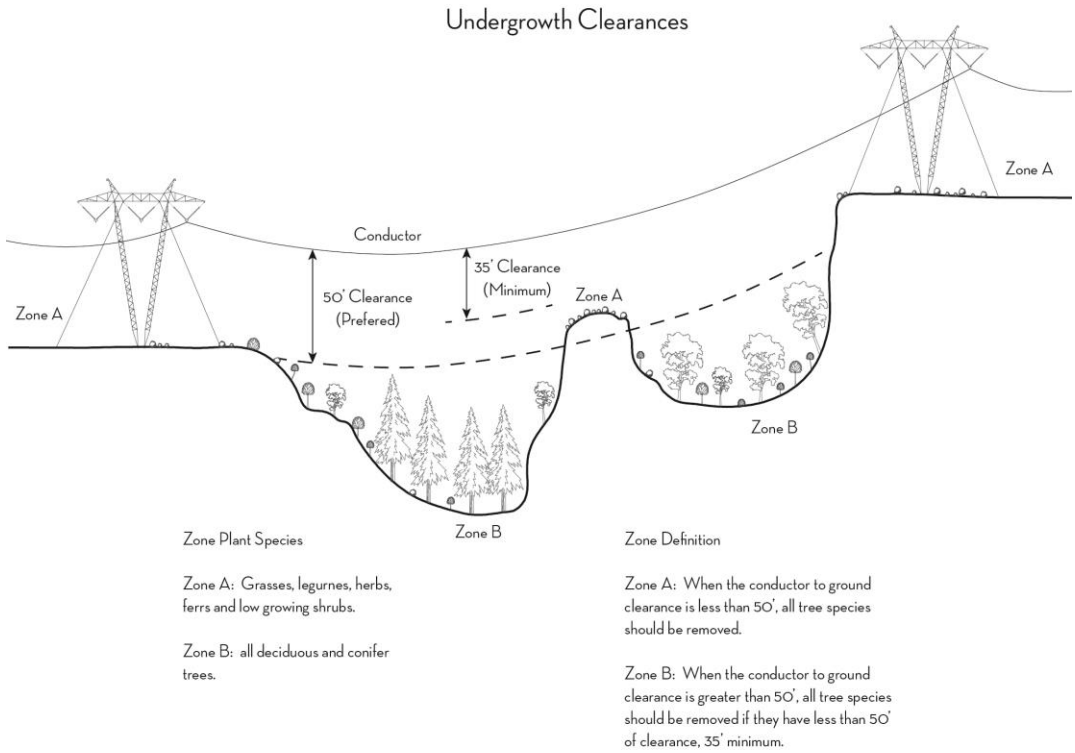

Figure 17 Right-of-way Vegetation Management in Steep Terrain

4.1.6 Substation and Regeneration Station Maintenance

Substation and regeneration station monitoring and control functions are performed remotely from the Company's central operations facilities located at Company's operation center in Portland, Oregon. Unauthorized entry into substations or regeneration stations is prevented with the provision of fencing and locked gates. Warning signs would be posted and entry to the operating facilities would be restricted to authorized personnel. Gateway South substations and regeneration stations would not be staffed; however, a remotely monitored security system would be installed. Several forms of security are planned for each of the locations, although the security arrangements at each of the substations or regeneration stations may differ somewhat. Security measures may include fire detection in the control building via the remote monitoring system; alarming for forced entry; and a perimeter security system coupled with remote sensing infrared camera equipment in the fenced area of the station to provide visual observation/confirmation to the system operator of disturbances at the fence line.

Maintenance activities include equipment testing, equipment monitoring and repair, and emergency and routine procedures for service continuity and preventive maintenance. It is anticipated that maintenance at each substation would require approximately six trips per year by a two- to four-person crew. Routine

operations would require one or two workers in a light utility truck to visit the substations monthly. Typically, once per year a major maintenance inspection would take place requiring up to 15 personnel for 1 to 3 weeks. Regeneration stations would be visited every 2 to 3 months by one individual in a light truck to inspect the facilities. Annual maintenance would be performed by a two man crew in a light truck over a 2- to 5-day period. If substation landscaping is required by the permitting agency, drought-tolerant plant materials would be used to minimize watering requirements after plant establishment.

Safety lighting at the substations would be provided inside the substation fence for the purpose of emergency repair work. Because night activities are not expected to occur more than once per year, the safety lighting inside the substation fence normally would be turned off. One floodlight, mounted near the entry gate to safely illuminate the substation entry gate, may be left on during nighttime hours.

4.2 Emergency Response

The operation of the system is remotely managed and monitored from control rooms at the Company's operation center in Portland, Oregon. Electrical outages or variations from normal operating protocols would be sensed and reported at these operation centers. As well, the substations are equipped with remote monitoring, proximity alarms, and in some cases video surveillance.

The implementation of routine operation and maintenance activities on powerlines would minimize the need for most emergency repairs. Emergency maintenance activities are often those activities necessary to repair natural hazard, fire, or human-caused damages to a line. Such work is required to eliminate a safety hazard, prevent imminent damage to the powerline, or restore service if there is an outage. In an emergency, the Company must respond as quickly as possible to restore power.

The equipment necessary to accomplish emergency repairs is similar to that required to conduct routine maintenance, in most cases. Emergency response to outages may require additional equipment to complete the repairs. For example, where the site of the outage is remote, helicopters may be used to respond quickly to emergencies. Emergency vehicle access to private property also would be maintained.

In practice, as soon as an incident is detected, the control-room dispatchers would notify the responsible operations staff in the area(s) affected and crews and equipment would be organized and dispatched to respond to the incident.

4.2.1 Fire Protection

All federal, state, and county laws, ordinances, rules, and regulations pertaining to fire prevention and suppression would be strictly adhered to. All personnel would be advised of their responsibilities under the applicable fire laws and regulations.

When working on public or National Forest System land, the Company's employees and contractor's vehicles would be equipped with approved suppression tools and equipment. The Applicant or their construction contractor would notify local fire authorities and the BLM or USFS (as appropriate) if a Project-related fire occurs within or adjacent to a construction area a complete fire protection plan would be developed as part of the Construction POD.

If the Company becomes aware of an emergency situation that is caused by a fire on or threatening BLM- or USFS-managed land and that could damage the transmission lines or its operation, it would notify the appropriate agency and emergency office contact. Specific construction-related activities and safety measures would be implemented during construction of the transmission line to prevent fires and to ensure quick response and suppression if a fire occurs. Typical practices to prevent fires during

construction and maintenance/repair activities include brush clearing prior to work, prohibit burning of slash, stationing a water truck at the job site to keep the ground and vegetation moist in extreme fire conditions, enforcing red flag warnings, providing “fire behavior” training to all pertinent personnel, keeping vehicles on or within designated roads or work areas, equip all construction equipment operating with internal combustion engines with spark arresters, and providing fire suppression equipment and emergency notification numbers at each construction site.

5 DECOMMISSIONING

The proposed transmission line would have a projected operational life of at least 50 years or longer. At the end of the useful life of the Project and if the facility were no longer required, the transmission line would be removed from service. Prior to the decommissioning and 2 years prior to such event, the Company would notify the authorizing agency of their intent to terminate right-of-way and would develop a reclamation plan. The reclamation plan would be reviewed and approved by the agencies and a reclamation bond would be posted and any required NEPA completed prior to commencing any abandonment actions. At such time, conductors, insulators, and hardware would be dismantled and removed from the right-of-way, according to the agency-approved plan. Structures would be removed and foundations removed to below ground surface.

Following removal of the transmission-line structures and equipment from the right-of-way, any areas disturbed during line dismantling would be restored and rehabilitated in accordance with the approved reclamation plan. In the same way, if a substation is no longer required, the substation structures and equipment would be dismantled and removed from the site. The station structures would be disassembled and either re-used at another station or sold for scrap. Major equipment such as breakers, transformers, and reactors would be removed, refurbished, and stored for use at another facility. Foundations would be either abandoned in-place or cut off below ground level and buried according to the approved reclamation plan.

The Company describes roads necessary for the operation and maintenance of transmission lines as access roads, with the sole purpose of providing maintenance crews access to the transmission lines. These roads would not exist if the transmission lines did not exist. In contrast, access roads serve a broader purpose, such as contributing to the federal, county, or state road systems. Access roads provide direct or indirect access to the transmission lines, but that access is not their primary purpose. The Company is responsible for the reclamation of access roads following abandonment and in accordance with the land-management agency's or landowner's direction, but is not responsible for reclamation of access roads unless mutually agreed upon by the Company and the landowner or required by the land-management agency. Access roads would be decommissioned following removal of the structures and lines, and may be decommissioned while the lines are in-service if they are determined to be no longer needed.

The Company may decommission access roads by (1) entering into an agreement with the BLM or USFS under which the agencies restore the road located on federal lands and is reimbursed for costs by the Company or (2) the Company or its contractor implement restoration measures as described below.

When an access road has been identified as no longer needed, the road would be reclaimed and seeded as soon as possible during the optimal seeding season. In some cases, reseeding may not be necessary, given the existing amount of soil compaction and vegetation currently in place. Where required by the land-management agency, compacted areas would be ripped and appropriate sediment control measures would be implemented.

Restoration and reclamation of the Project right-of-way would be in accordance with Section 3.2.8 – Site Reclamation and in accordance with the Project Construction POD.

REFERENCES

Institute of Electrical and Electronics Engineers (IEEE). 2007. National Electric Safety Code. IEEE Standards Association. New York, New York.

PacifiCorp. 2007. Transmission and Distribution Vegetation Management Program: Specification Manual. PacifiCorp System Forester. Salt Lake City, Utah. June 1.

Attachment A – Access Road Standards

Avian-Safe Transmission Structures

A. Scope

This standard provides information regarding the protection of birds of prey (raptors) and other large birds from electrocution resulting from contact with overhead transmission power lines.

B. Background and Regulations

Raptors and other large birds can get electrocuted from coming into contact with overhead power lines. In addition to bird mortalities, such electrocutions can cause interruption of power, resulting in reduced reliability and restoration costs. Various government agencies, conservation groups and the general public demand both higher service reliability and better protection of avian populations and their habitats. PacifiCorp's Bird Management Program and Avian Protection Plans use proactive, reactive and preventative measures to reduce bird mortalities and bird-related outages. Additional information can be found on the Environmental Services intranet website.

The following federal laws in the U.S. Protect almost all avian species:

- The Migratory Bird Treaty Act (MBTA) of 1918
- The Bald and Golden Eagle Protection Act of 1940
- The Endangered Species Act (ESA) of 1973

The MBTA protects over 800 species of native North American migratory birds, with the other two acts placing further emphasis on preservation of eagles and endangered species of birds. Failure to comply with these laws can result in substantial fines and criminal prosecution. Therefore transmission system owners must actively attempt to prevent avian electrocutions.

C. Avian Electrocutions

Birds can be electrocuted by simultaneously contacting two energized conductors or an energized conductor and grounded structures, conductors, hardware, or equipment. Electrocutions may occur when the bird is landing, perching or taking off. The electrical design factor most crucial to avian electrocutions on structures is the physical seperation between energized and/or grounded components that can be bridged by birds. As a general, rule electrocutions occur on structures with the following:

1. Phase conductors separated by less than the wrist-to-wrist distance or height of a bird. See Figure 1.
2. Grounded hardware (e.g. grounded wires, bolts, etc.) separated from and energized phase conductor by less than the wrist-to-wrist distance or height of a bird.

Dry feathers provide insulation, so birds must typically contact electrical equipment with fleshy parts that are conductive for electrocution to occur. Fleshy parts include the feet, mouth bill and the wrists from which the primary feathers originate. For a large golden eagle with a 90″ wingspan, the distance from the fleshy tip of one wrist to the tip of the other can measure up to 42 inches; the height (head to foot) of an eagle can reach up to 28 inches.

© 2012 by PacifiCorp. All rights reserved.

Deviation from this standard requires advanced approval. Contact the standards engineering manager for approval process and forms.

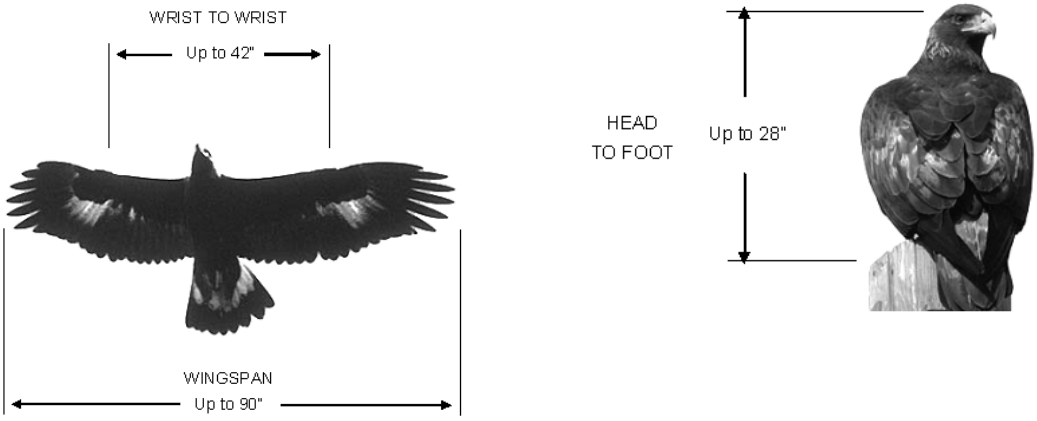

Figure 1 — Typical eagle dimensions

D. Avian-Safe Symbol

"Avian-Safe" structures have been designed to provide adequate distances between energized and/or grounded components in order to allow birds to perch without risk of electrocution. Avian-safe overhead transmission construction standards are marked at the top of the first page with the symbol shown in Figure 2.

May be used
In raptor areas

Figure 2 — Avian-safe symbol

E. Avian Protection

Transmission structures generally have sufficient separation between phases, but there are many shielded structures that do not have adequate separation between energized and grounded components. Installing avian protection devices, such as covers, can greatly reduce bird fatalities. This method of protection is preferred for existing structures because of lesser cost of retrofitting and no line outage.

For new construction, the preferred method of protection is to provide adequate horizontal and vertical separation between all energized and grounded components of the structure, and/or between phases, such that large birds cannot bridge that distance.

The industry standard for avian protection on power lines, which is also used by PacifiCorp, is **60 inches of horizontal separation** and **40 inches of vertical separation.**

These clearances shall apply to all grounded structures such as concrete, steel, or grounded wood poles, or where phase-to-phase distance is inadequate. The separations are intended to allow sufficient clearance for an eagle. Applying this standard will

© 2012 by PacifiCorp. All rights reserved.

Deviation from this standard requires advanced approval. Contact the standards engineering manager for approval process and forms.

also protect smaller birds, such as ospreys, hawks, owls, wading birds and song birds. Several transmission structure types with minimum distances labeled are shown in Figure 3 and Figure 4.

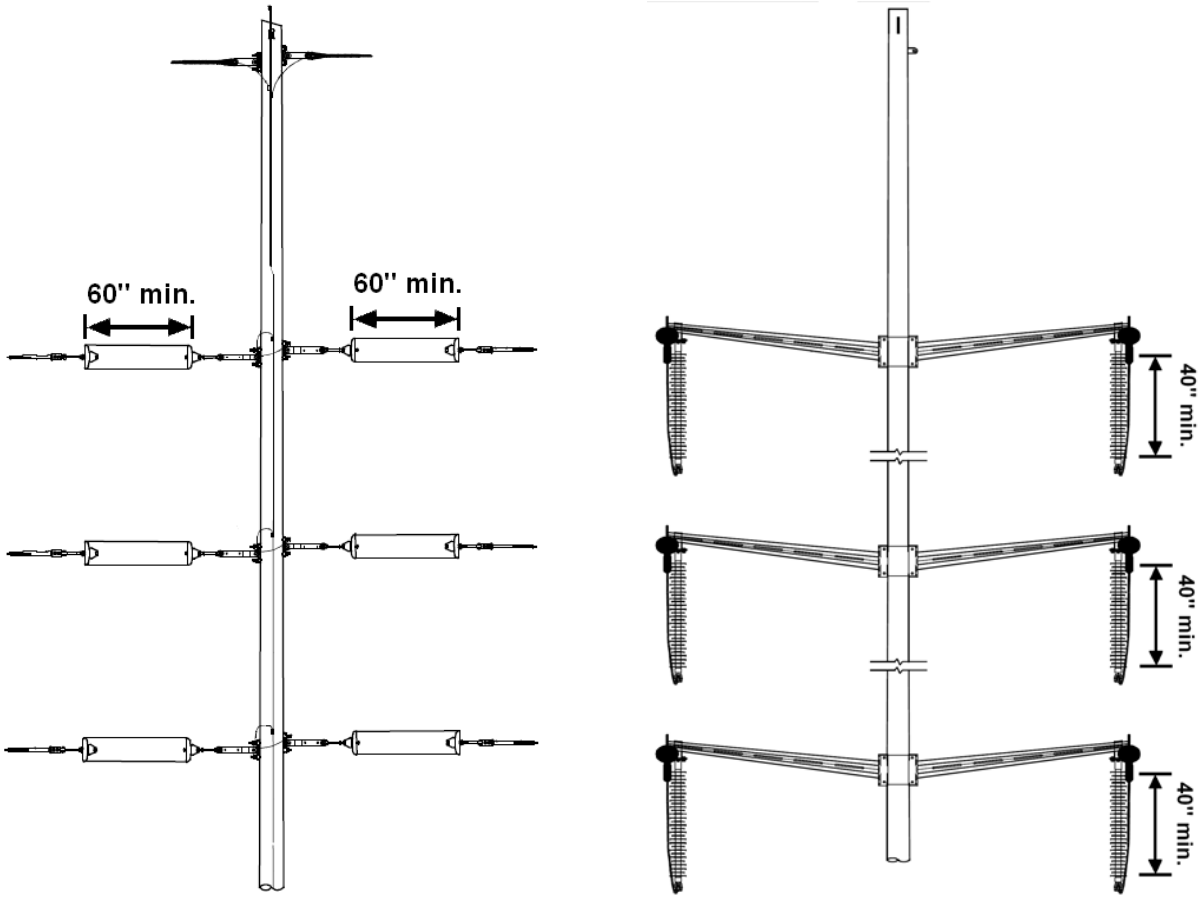

Figure 3 — Deadend transmission structures showing minimum required distances

© 2012 by PacifiCorp. All rights reserved.

Engineer (A. Shkuratkov): A. S.
Sr. Engineer (C. Wright): CLW

Avian-Safe Transmission Structures

PACIFICORP
A MIDAMERICAN ENERGY HOLDINGS COMPANY

13 Sept 12

Deviation from this standard requires advanced approval. Contact the standards engineering manager for approval process and forms.

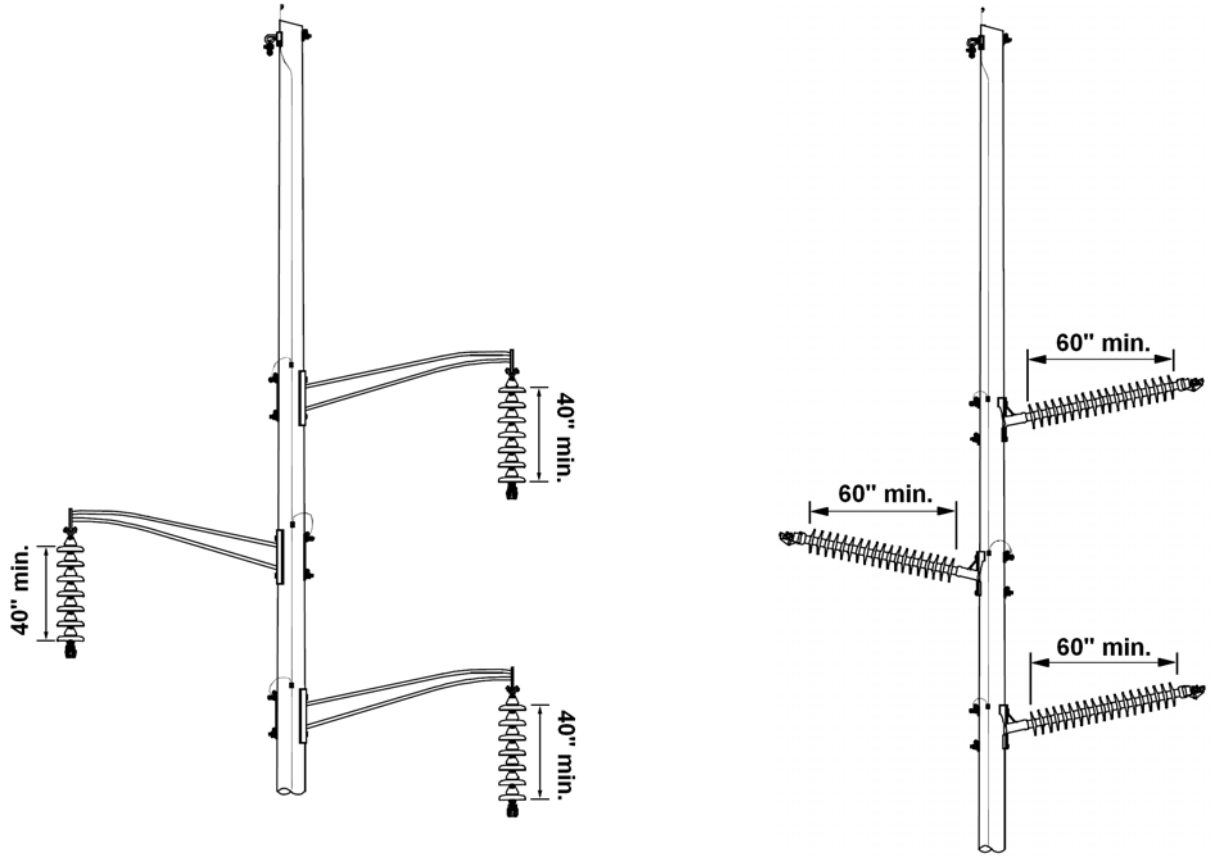

Figure 4 — Tangent transmission structures showing minimum required distances

The required minimum distances between energized conductors and grounded equipment apply to grounded structures only. There are two main types of transmission poles which fall under this category:

- Steel or concrete poles, which are always grounded.
- *Shielded* wood poles, which have a grounded wire running the length of the pole with all hardware bonded.

Unshielded wood poles do not have a grounding wire running the length of the pole, and birds do not get electrocuted by contacting the pole and energized conductor simultaneously.

The minimum lengths discussed in this standard are intended to guide design and installation of transmission structures from 46/69 kV through 138 kV. Transmission structures for 161 kV and above have sufficiently long insulators to meet all the minimum clearance requirements described above.

© 2012 by PacifiCorp. All rights reserved.

Deviation from this standard requires advanced approval. Contact the standards engineering manager for approval process and forms.

F. Reporting Mortalities and Problem Nests

Dead birds of protected species found on, below or near PacifiCorp distribution and transmission facilities or substations must be reported using PacifiCorp's Bird Mortality Tracking System (BMTS). All required data for entry into the BMTS should be collected by field personnel that discovered the mortality.

All birds, excluding eagles and threatened or endangered species, should be buried on site after data is collected, unless the carcass has a leg band, radio transmitter, neck collar or other special marker. If it is not possible to bury or dispose of the carcass, leave it on site and notify the local manager. A mortality record must be entered into the BMTS and appropriate remedial action taken, as described below.

The BMTS website may be found here:

PacifiCorp Intranet Home Page

→ *Environment*

→ *Environmental Resources*

→ *PP or RMP Environmental Support*

→ *Avian*

→ *Bird Mortality/Problem Nest Incident Reporting*

Click "Add Mortality" to review all the information required in reporting a bird mortality.

Eagle or other endangered/threatened bird mortalities must be reported to Environmental Services immediately upon discovery. Environmental Services will notify USFWS of dead eagles, which will be retrieved by the agency. File a report using the BMTS as described above, including detailed directions to the site for retrieval of the carcass. The local manager must be notified immediately regarding any eagle, endangered/threatened species or marked bird mortalities. Endangered and threatened species that may be seen at PacifiCorp's facilities include California condor, bald eagle, whooping crane and spotted owl.

Although electrocution of birds nesting on power line equipment is relatively rare, nests may cause operational problems. Problem nests may also be reported using the BMTS Nests which do not interfere with power operations should be left in place. In most cases, a permit is required to remove or relocate a nest. If a nest is causing immediate danger of fire, safety risk to crew, risk of bird electrocution or threat to human life or property, then PacifiCorp crews may take immediate action prior to receiving a permit. In this case, Environmental Services must be notified immediately to report "imminent danger" action taken.

Training presentation on bird protection are conducted by Environmental Services for field personnel. Training materials are also available on the Environment intranet website. Environmental Services staff will assist with site-specific prescriptions as necessary. Each district is responsible for ensuring that all employees likely to find dead birds or nests are familiar with the proper procedures for reporting and documentation, and other aspects of PacifiCorp's Bird Management Program.

The BMTS is a searchable database of bird mortalities and problem nests. To avoid entering redundant mortalities or nests, search for past reported incidents and confirm that it has not already been reported.

© 2012 by PacifiCorp. All rights reserved.

G. New Construction and Maintenance

All new or rebuilt power lines and poles shall be built to avian-safe standards.

Poles where a protected bird was killed must be retrofitted to prevent additional electrocutions. Retrofitting could include the following:

- Applying covers
- Installing longer insulators
- Reframing or replacing the structure

For more information on all of the avian-safe topics discussed here, refer to PacifiCorp's Bird Management Program Guidelines and other related documents on the Avian Program site:

PacifiCorp Intranet Home Page

→ *Environment*

→ *Environmental Resources*

→ *PP or RMP Environmental Support*

→ *Avian*

→ *Bird Management Guidance Documents*

→ *Bird Management Policies*

→ *Raptor Safe Construction Standards*

© 2012 by PacifiCorp. All rights reserved.

Deviation from this standard requires advanced approval. Contact the standards engineering manager for approval process and forms.

Roads—Clearing for Installation and Maintenance of Roads

A. Scope

This standard supplies information about clearing necessary for installation of transmission line access and rights-of-way roads. Clearing width for the construction of new roads or maintenance of existing roads shall be three (3) feet beyond the edge of the roadway on level ground. On hillside cuts or fills, the clearing shall be sufficient width to install the cut or fill without interference. (See figure 1).

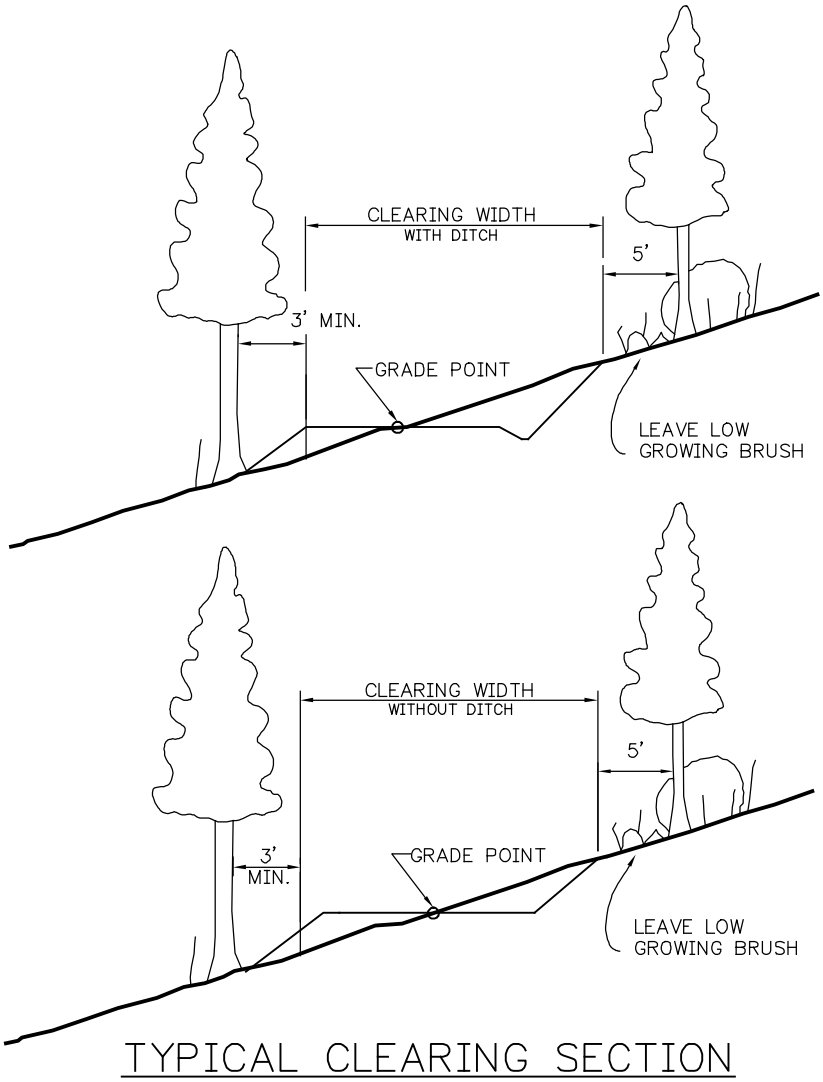

Figure 1—Road Clearing Cross Section

© 2011 by PacifiCorp. All rights reserved.

Engineer (C. Wright): CLW
Stds Manager (D. Asgharian): DDA

Roads—Clearing for Installation and Maintenance of Roads

PACIFICORP
A MIDAMERICAN ENERGY HOLDINGS COMPANY

5 Oct 11

Deviation from this standard requires advanced approval. Contact the standards engineering manager for approval process and forms.

Table 1 — Clearing Width

Side Slope (%)	Cut Slope	Clearing Width (ft)	Clearing Width (ft)	Clearing Width For Turnouts (ft)	
		w/o Ditch	w/ Ditch	w/o Ditch	w/ Ditch
0		24	27	30	33
10	1.5 : 1	26	30	32	35
20	1.5 : 1	27	31	33	37
30	1.5 : 1	29	32	36	40
40	1.5 : 1	31	35	39	43
50	1.5 : 1	34	39	44	49
60	3/4 : 1±	37	44	48	55
70	3/4 : 1±	45	52	55	62
80	1/2 : 1±	37	43	47	53

Notes:

1. See specifications for additional information on clearing and grubbing.
2. ± full bench
3. For clearing purpose only.

Where it is necessary to fell trees in streamside areas, fell trees away from streams, retaining all non-hazardous vegetation. Do not skid trees in, through, or across streams.

All operations on federal government property shall comply with applicable statutes and regulations, including stipulations contained in right-of-way permits.

No trees shall be cut or removed before they are marked for removal.

© 2011 by PacifiCorp. All rights reserved.

Deviation from this standard requires advanced approval. Contact the standards engineering manager for approval process and forms.

Roads—Construction

A. Scope

This standard provides information about constructing transmission line access. All road construction/improvements, fords, structure/equipment landings, and lay-down yards shall be held to a minimum. On level terrain, road construction may only require back-dragging a blade to remove brush to facilitate construction. In undulating or mountainous terrain the following standards shall apply.

B. Index

The index below provides a quick reference to detailed figures contained in this standard for road construction with varying slopes and conditions.

Referenced Road Cross Section	ACCESS ROAD SECTION
Figure 2	OUTSLOPE SECTION (W/O DITCHING)
Figure 3 Figure 4 Figure 5	SIDEHILL SECTION
Figure 2	FILL SECTION
Figure 2	SECTION ON FLAT GROUND
Figure 2	THROUGH CUT SECTION

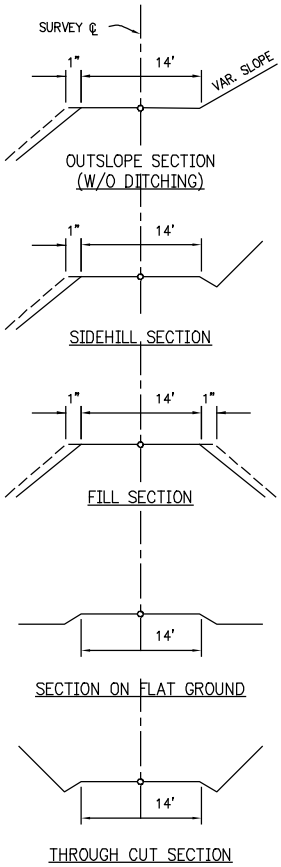

© 2008 by PacifiCorp. All rights reserved.

C. Planning

Before construction can take place. the road system must be planned and located properly. Poor planning or road location is associated with the following most common causes of road failure (Furniss et al. 1991):

- Improper placement and construction of road fills.
- Insufficient culvert sizes.
- Very steep road grades.
- Improper placement or sidecast of excess materials.
- Removal of slope support by undercutting.
- Altering drainage by interception and concentration of surface and subsurface flows.

A plan showing existing and new road locations shall be developed and shall be shown on the company's access road charts, plan maps, and transportation plan map. Road locations shall be marked on the ground by survey stakes and blue-and-white, striped flagging. GPS coordinates shall be obtained to define the road center–line. These coordinates shall be used to create the transportation plan map. Road information shall also be placed on transmission line plan maps.

In the event of conflict between the drawings and the staked locations, the latter shall take precedence and transportation plan maps and the transmission line plan maps shall be revised accordingly. Any culverts and gates listed in access road charts are required. Fords, drainage improvements, rip-rap fills and crushed rock requirements listed in the access road charts are anticipated; however, requirements will be determined based on actual site conditions encountered. If changes are made in the field, the maps shall be revised to show these changes.

Because roads are long-term features, their location must be carefully chosen to provide safe access, avoid long-term maintenance problems, reduce potential for degrading water quality, and minimize costs over the short and long term. For more information see the references in Section H.

D. Road Construction

Roads shall be constructed in a manner that will support equipment for construction of the transmission line and to provide access roads for line inspection and maintenance equipment after the line has been constructed.

All construction access roads on federally managed public lands are subject to approval prior to construction. Other federal, state, and local landowners may require approvals before road construction commences on their property. Where side slopes exceed 60 percent, a full bench cut will be reburied. No side-casting of material will be allowed in these areas; end-haul of material will be required to a designated location approved by the federal agency or other property owner. Close coordination with the federal agency will be required.

The detail drawings provided in this standard for completing cuts and fills, providing drainage, and installing culverts are furnished as guidelines for the road construction. Actual road construction cut slopes, fill slopes, drainage requirements, rip-rap, and

© 2008 by PacifiCorp. All rights reserved.

crushed rock needs will be determined during construction based on site conditions. Cut and fill quantities shall balance when possible, reducing the material removed or brought in for road completion.

During road construction, consideration shall be given to restoration required after construction completion, including re-vegetation, rock cover, and other drainage and erosion control factors. Clearing and grading shall be minimized to reduce the restoration requirements for disturbed areas. The visual impact of roads on the surrounding areas shall be considered at all times during construction.

Crushed rock shall be sound, hard, durable, angular, or sub-angular rock, suitable for road base courses. Crushed rock shall be well graded 2″ to 1/4″ size (3″ to minus-size skip-graded is a minimum acceptable substitute).

Rip Rap shall be sound, hard, durable, rock ranging in size from 2″ to 8″ as specified on drawings and as required by conditions.

Any improvements made, including spur roads, fords, bridges, equipment landings and lay-down areas, shall be held to a minimum. Following completion of the work, the removal of these improvements shall be at the discretion of company or its representative.

Roads shall be sufficiently wide, but not less than 14′ in width. The construction shall provide bench cuts, grading, filling, compaction, and ditches necessary to accommodate heavy construction equipment and other heavily loaded vehicles. Roads shall be installed in accordance with the figures in this standard.

All roads shall be constructed with a smooth, uniform surface and shall be outsloped where practical to provide drainage and minimum erosion. Avoid outsloped roads where they will direct runoff onto erodible fill, embankments, or where they would cause off-camber curves. Where outsloping is not practical, sufficient water dips, water bars, or ditching, shall be installed as shown in the Section E of this standard. See standards TA 503, *Roads—Water Bars and Water Dips* and TA 504, *Roads—Culvert Installation* for further detail on proper drainage.

Outsloping a road means building the road surface so that it is tilted outward 2-3 percent so water can run off the road surface (see Figure 1). Outsloping works well under the right conditions. The following conditions are favorable for use of outsloped roads with no ditch:

- Short back slopes.
- Terrain slope less than 20 percent.
- Road grades steeper than 3 percent.
- Seasonal road use.
- Light traffic.
- Fast re-vegetation of cut and fill slopes.

Outslopes become a problem if roads are not maintained when ruts begin to form. The ruts will then act as channels.

The following conditions are unfavorable for outsloping:

- Long back slopes.

© 2008 by PacifiCorp. All rights reserved.

- Terrain steeper than 20 percent.
- Steep, continuous road grade.
- Where ruts occur and allow water to concentrate and run along the road.
- Where winter hauling is required.

To minimize rutting and erosion of the right-of-way, road construction shall be completed during predominantly dry conditions. Fills, which will essentially consist of native soils, shall not be made when the moisture content of the soils will not permit adequate compaction.

As a minimum level of compaction, common fill shall be placed in 12″-thick, loose lifts and each lift compacted by walking or tracking in with a heavy dozer or rubber-tired (pneumatic) equipment. Each lift shall be compacted by at least four passes with the equipment.

In areas of dense vegetation, the surface organic material shall be stripped from the ground within the roadway and cut and fill areas. Stripping to a maximum depth of 6″ will be adequate unless otherwise directed by the company or its representative. Stripped and disturbed areas shall be compacted as specified above or as shown in the drawings or access road charts.

Personnel constructing the access road system shall be aware of the definition of a wetland such that potential wetlands may be identified before work is begun. In some cases where wetlands have been identified, road construction personnel shall comply with requirements as directed by the company or its representative.

Ditches, installed culverts, and/or installed surface drains to drain wet areas resulting from springs, seeps, or poor surface drainage may be required to construct the road. Drainage ditches shall be shallow, not to exceed 18″ in depth. The ditch bottom shall have a width of approximately 1′ and side slopes shall not exceed 1.5 to 1 (see Figure 5).

All earthwork and grading, cut and fill slopes, and other disturbed areas shall be re-vegetated with seed. Unless otherwise specified, the seed mix shall consist of 45 percent rye grass, 45 percent orchard or fescue grass, and 10 percent clover. The seed shall be applied at a minimum of 60 pounds per acre. At locations where the ground slope is greater than 10 percent, the seeds shall be covered with straw- or wood-fiber mulch applied at a rate of one ton of mulch per acre. The seed shall be spread in early fall when weather permits.

All phases of operation, including the construction of truck and tractor roads, shall be conducted to minimize as much as practical the damage to the soil and to prevent gullies and creation of other conditions conducive to soil erosion. Repair of all erosion damage shall be accomplished as soon as it occurs to prevent further loss of material into existing drainages. Cut slopes shall be stabilized. Care shall be taken to avoid creation of wet land conditions.

Crew movement on the right-of-way, including access routes, shall be limited so as to minimize damage to land or property. Crews shall endeavor to avoid marring the lands. Ruts and scars shall be obliterated, damage to ditches, terraces, roads and other features of the land shall be corrected, and the disturbed land beyond the access roads and structure landings shall be restored, as nearly as practical, to its original condition before final acceptance of the work.

© 2008 by PacifiCorp. All rights reserved.

Erosion control measures shall be installed to minimize the transport of eroded sediments to streams and other waterways. Erosion control measures may include, but are not necessarily limited to, straw bales and silt fences.

E. Road Cross Sections

This section provides road cross sections, including required dimensions, cleared right-of-way width, and other information. See general road construction notes in Section G and references in Section H.

© 2008 by PacifiCorp. All rights reserved.

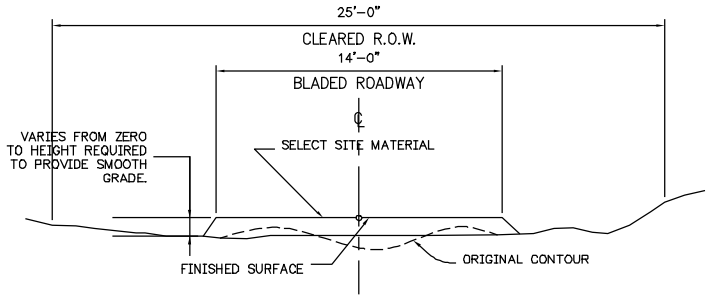

TYPICAL SECTION ON FLAT GROUND

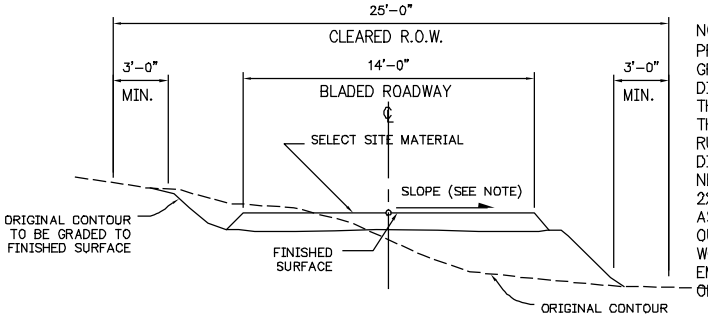

NOTE:
PROVIDE "OUTSLOPED" ROAD CROSS-SECTION, BY GRADING ROADS TO SLOPE IN THE SAME DIRECTION AS THE SURROUNDING TOPOGRAPHY. SO THAT THE UPHILL EDGE OF THE ROAD IS HIGHER THAN THE DOWNHILL EDGE. BESIDES ALLOWING RUNOFF TO EXIT THE ROADWAY IN AS SHORT A DISTANCE AS POSSIBLE. THIS ELIMINATES THE NEED FOR ROADSIDE DITCHES. PROVIDE A MINIMUM 2% OUTSLOPE ON ROADS WITH GRADES AS STEEP AS 15% ON STEEPER ROADS. PROVIDE 4% OUTSLOPE. AVOID OUTSLOPED ROADS WHERE THEY WOULD DIRECT RUNOFF ONTO ERODIBLE FILL, EMBANKMENTS OR WHERE THEY WOULD CAUSE OFF-CAMBER CURVES.

TYPICAL "OUTSLOPE" SECTION

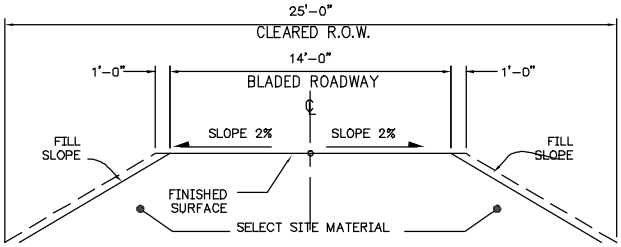

TYPICAL FILL SECTION

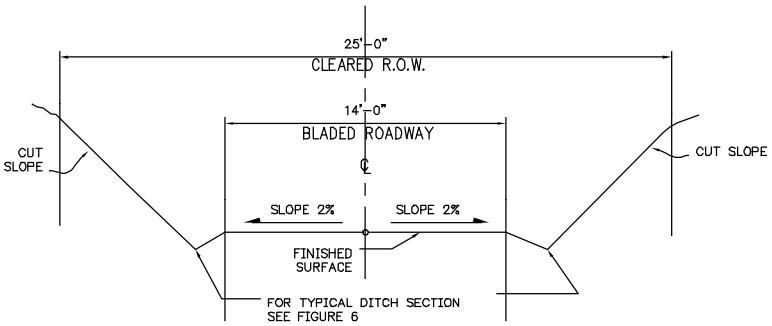

TYPICAL THROUGH CUT SECTION

Figure 1—Typical Road Sections for Different Terrains

© 2008 by PacifiCorp. All rights reserved.

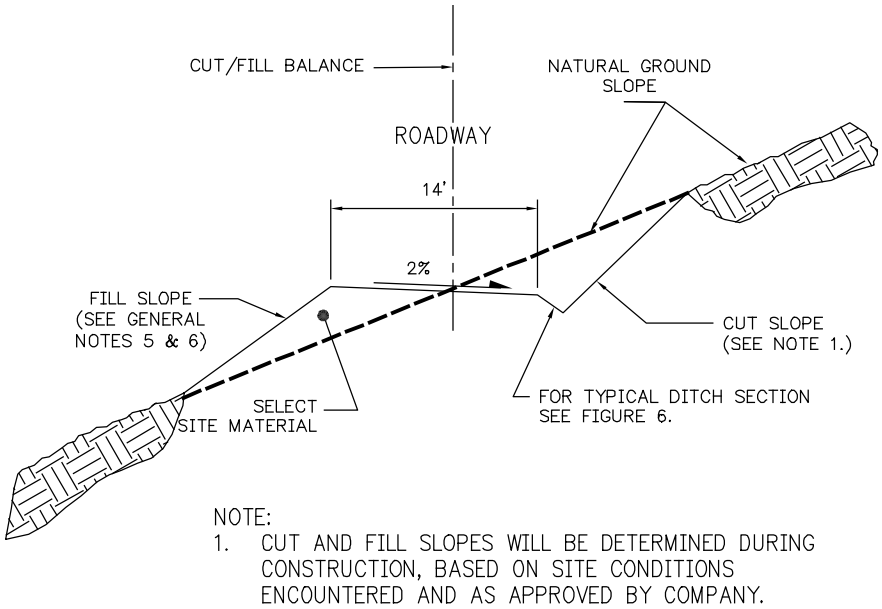

Figure 2—Typical Cut and Fill Insloped Road Section for Natural Side Slopes Less Than 30 Percent (15°)

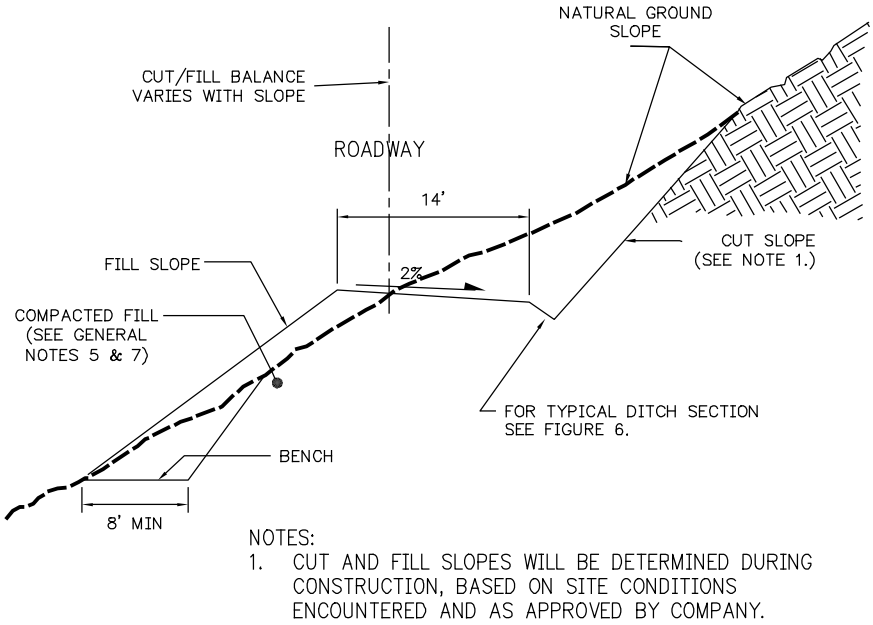

Figure 3—Typical Cut and Fill Insloped Road Section for Natural Side Slopes Greater Than 30 Percent (15°) and Less Than 60 Percent (30°)

© 2008 by PacifiCorp. All rights reserved.

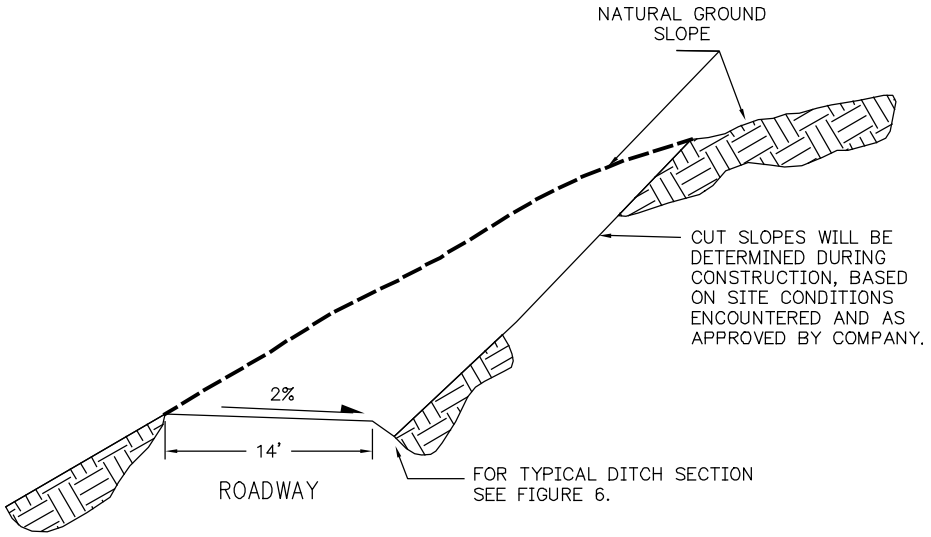

Figure 4—Typical Cut and Fill Section
for Natural Side Slopes Greater than 60 Percent (30°)

F. Typical Ditch Section

Typical ditch construction is depicted in Figure 6. Many of the road cross sections shown above use this ditch construction.

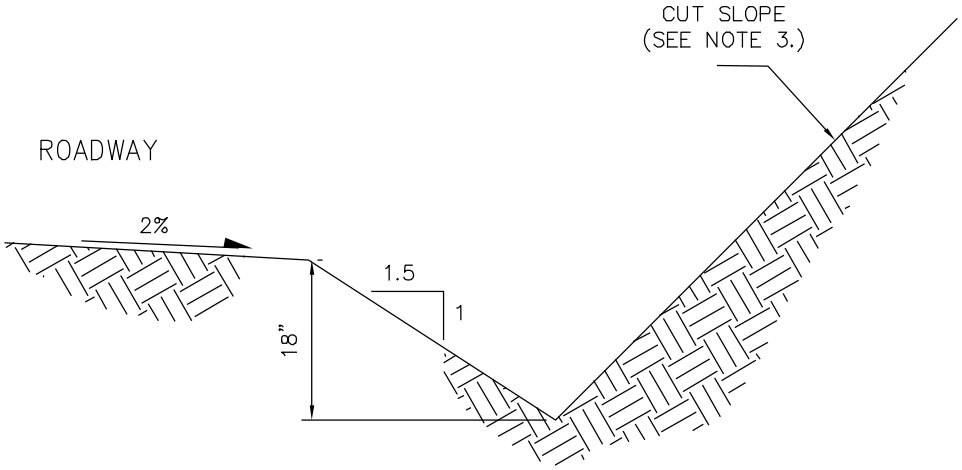

Figure 5—Ditch Section

Notes:

1. Slope the ditch so that it will drain; ditch shall have a minimum slope of 1 percent and not to exceed 3 percent.
2. Remove all soil, rock, and other material loosened by grading from ditch.
3. Cut slopes will be determined during construction based on site conditions and as approved by the company representative.

© 2008 by PacifiCorp. All rights reserved.

G. General Road Construction Notes

1. Roads shall follow natural contours as much as practical.
2. Maximum grade for roads shall be 10 percent. Grades up to 20 percent will be allowed for a distance of 1000 feet where unavoidable and approved by the company.
3. Radius of curves shall be 200 feet, with a minimum of 80 feet when approved by company. When curves are less than 200 feet, roadbed shall be widened as shown in Table 2.
4. Cut and fill slopes will be determined during construction based on site conditions encountered and as approved by the company.
5. Unless specified otherwise by the company, fill material shall consist of site material excavated from RG-1 cuts. Fill material shall have a maximum particle size of 12″.
6. Fills placed on side slopes of 30 percent or less shall be placed in nominal 9″ lifts and compacted by walking in with at least four passes of earthwork equipment.
7. Fills placed on side slopes greater than 30 percent shall be placed in nominal 12″-thick lifts and compacted to at least 90 percent of the maximum dry density as determined by the ASTM D 696 method of compaction.
8. Allow 1′ additional road width on fill slopes for sloughing. When fills are over 6′ high at shoulder, allow 2′ additional road width.
9. Road construction across wetland areas may require placement of fragmented 6″ minus rock. Rock shall be placed in 8″-thick lifts and compacted by a heavy dozer or vibratory roller until well keyed. RB-(1) rock will be provided and installed by the contractor. Proper construction shall be use in wetlands so conditions as shown in Figure 7 do not develop.
10. Geotextile fabric material shall consist of MIRAF1212 OHP or equivalent, as approved by the company.

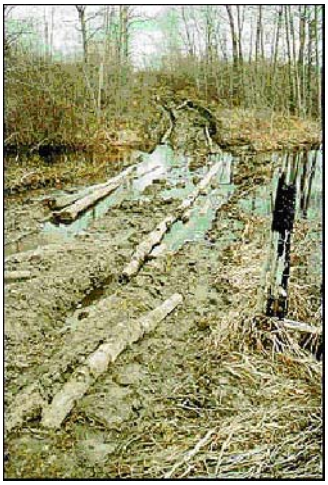

Figure 6—Poor Road Construction in Wetland Area

Table 2—Road Width for Different Road Curves

Curve Radius (feet)	Roadbed Width (feet)
200 or >	14
150 to 200	16
100 to 150	18
80 to 100	20

© 2008 by PacifiCorp. All rights reserved.

H. References

1. *Handbook for Forest and Ranch Roads*, William E. Weaver, PHD. and Danny K. Hagans, 1994.

2 *A Landowner's Guide to Building Forest Access Roads,* United States Department of Agriculture, Forest Service, Northeastern Area State and Private Forestry, July 1998.

© 2008 by PacifiCorp. All rights reserved.

Roads—Water Bars and Water Dips

A. Scope

This standard describes drainage methods, including water bars, water dips, ditches, and outsloping, which can be used where intermittent or permanent streams cross roadways. Depending on the method used, drainage structures should be installed during or after basic road construction (see TA 501, *Roads—Construction*). For information on ditches and culverts see TA 504, *Roads—Culvert Installation*.

On level terrain, road construction may only require back-dragging a blade to remove brush to facilitate construction. Water bars and dips may not be necessary.

In undulating or mountainous terrain, water bars or water dips shall be used to control erosion.

The BLM or US Forest Service may require special designs for road design.

On privately owned land, both PacifiCorp and the property owner shall approve a plan to best control erosion on rights-of-way roads.

Figure 1—A water bar effectively intercepts the surface water and diverts it from the road

B. Water Bars

Water bars are narrow structures which can be constructed at various depths. Deep bars are generally used on roads closed to vehicle traffic. Figure 1 shows a typical shallow water bar constructed across a road.

Water bars can be constructed with hand tools, but bulldozers are most commonly used. It is best to start at the end of the road and work outward so the bars are not damaged with frequent crossing by heavy machinery.

Table 1—Distance Required Between Water Bars

Road grade (%)	Distance (feet)
2	250
5	135
10	80
15	60
20	45
25	40
30	35

Source: Kochenderfer 1970, p. 28

Water bars should be installed at an approximate 30° angle downslope. Figure 2 shows dimensions for construction of water bars and water dips with and without drainage

© 2011 by PacifiCorp. All rights reserved.

Deviation from this standard requires advanced approval. Contact the standards engineering manager for approval process and forms.

ditches to be used on access and right-of-way roads. The outflow end of the water bar should prevent water from accumulating and should not flow directly into a stream. This will allow sediment to settle out of the water, preventing erosion. As a supplement to water bars on closed roads, logging slash can be lopped and scattered, grass can be planted, or both. Table 1 shows recommended spacing between water bars for various road grades.

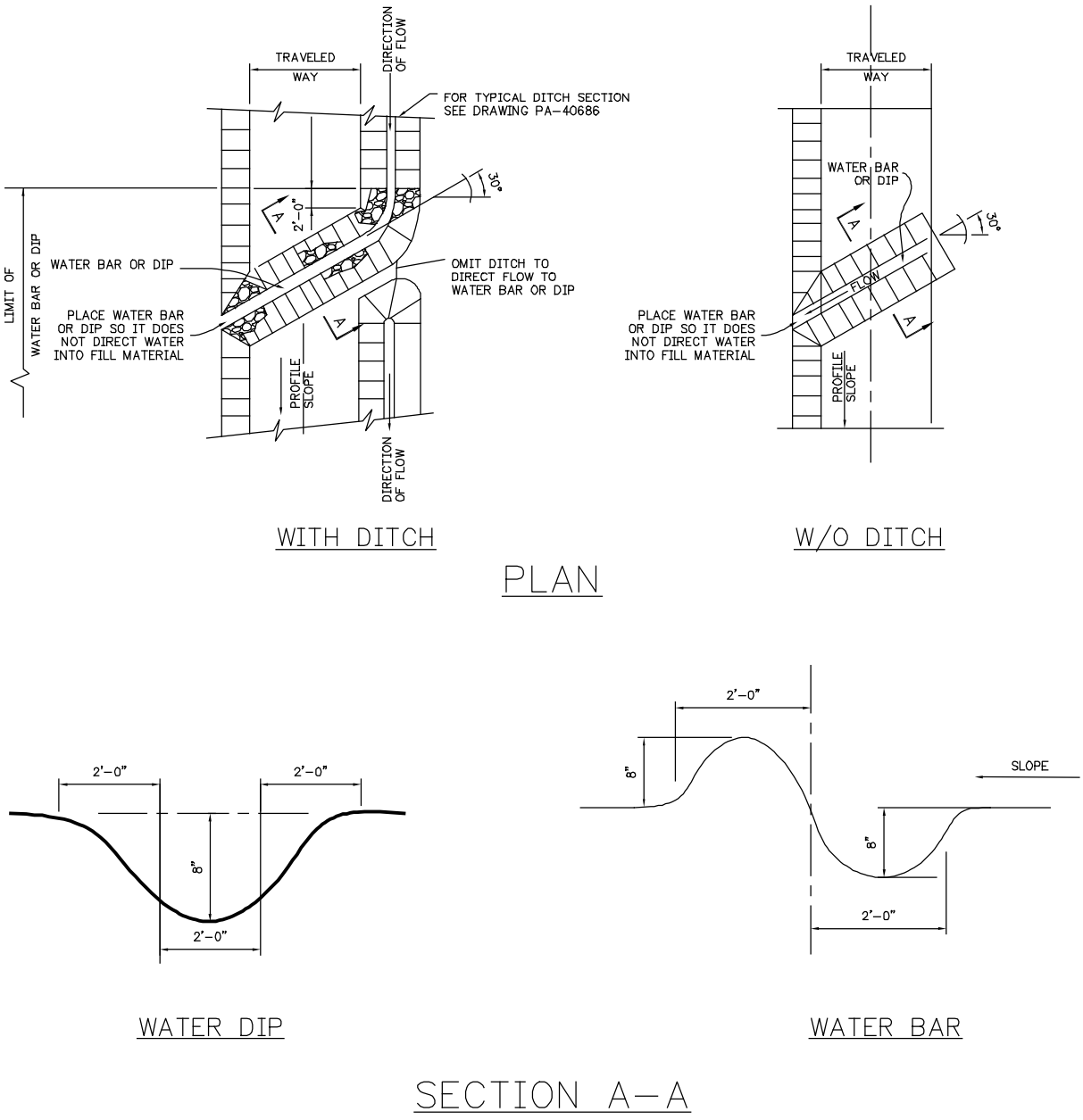

Figure 2—Water Bar and Dip Construction Plan and Profile

© 2011 by PacifiCorp. All rights reserved.

Deviation from this standard requires advanced approval. Contact the standards engineering manager for approval process and forms.

C. Broad-Based Drainage Dips

Broad-based drainage dips are easily maintained and do not increase wear on vehicles or reduce hauling speed when properly installed. These dips shall not be used on roads graded in excess of 10 percent (see Figure 3).

Table 2 lists the spacing distances of broad-based dips, as computed with the formula shown in Figure 3.

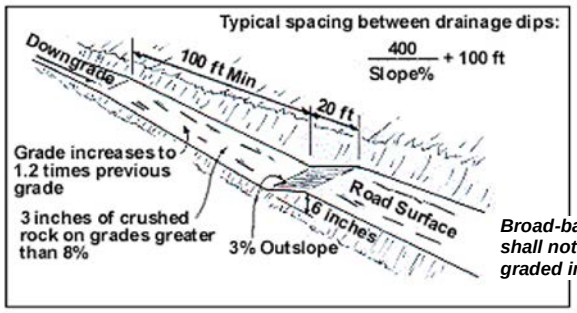

Broad-based drainage dips shall not be used on roads graded in excess of 10%.

Figure 3—Typical Spacing Between Drainage Dips

Table 2—Minimum Distance Needed Between Drainage Dips

Road grade (%)	Distance (feet)
2 – 4	300 – 200
5 – 7	180 – 160
8 – 10	150 – 140

Source: Kochenderfer 1970, pg.19, 25

As with a water bar, care shall be taken to ensure adequate drainage at the outflow of a dip. Broad-based drainage dips shall never be designed to discharge directly into a stream. The discharge area shall be protected with stone, grass, sod, heavy litter cover, brush, logs, or other natural material which will reduce the velocity of the water. Natural litter may be adequate in many cases if the terrain is not too steep.

Close attention shall be paid to construction of broad-based drainage dips, as they are often made too small. Figure 3 shows minimum dimensions. Dips shall be armored with crushed rock or gravel.

© 2011 by PacifiCorp. All rights reserved.

Deviation from this standard requires advanced approval. Contact the standards engineering manager for approval process and forms.

Figure 4 shows a practical example of how a broad-based drainage dip can be used. A drainage dip is effective in controlling water on the road and does not significantly slow the speed of vehicles. The local drainage shall dictate how often these dips shall be used.

Figure 4—Broad-Based Drainage Dip

© 2011 by PacifiCorp. All rights reserved.

Deviation from this standard requires advanced approval. Contact the standards engineering manager for approval process and forms.

Roads—Culvert Installation

A. Scope

This standard provides information about the construction of surface drainage and the installation of culverts. It is impossible to over-emphasize the importance of drainage in maintaining stable roads and protecting water quality. Roads should be designed and constructed to cause minimal disruption of natural drainage patterns. Provisions for two components of road drainage should be included in every road project: 1) road-surface drainage (including drainage which *originates* from the cutbank, road surface, and fill-slope), and 2) hill-slope drainage (including drainage from large springs, gullies, and streams which *cross* the road alignment).

B. Determining Culvert Diameter

Use pipe no smaller than 24″ in diameter. A drainage table provides help in determining the proper size culvert (see Table 1 and Table 2). The following example illustrates how to choose pipe size (Table 1) using the drainage table (Table 2). To use this method, you will need information on slope, soils, and cover.

Example: The area to be drained is 70 acres on steep slopes with heavy soils and moderate cover. In Table 2 under C opposite 70, find area required: 10.3 square feet. Under the area table for round pipe (Table 1), the pipe size should fall between 42″ and 48″. Use 42″ pipe with an area of 9.6 square feet. If a wood or other type of box culvert is planned, one 3′ by 3.5′ pipe would furnish the required area.

Table 1—Size of Round Pipe Needed for Area of Waterway

Area (square feet)	Pipe diameter (inches)
1.25	24
1.80	24
3.10	24
4.90	30
7.10	36
9.60	42
12.60	48
15.90	54
19.60	60
23.80	66
28.30	72
33.20	78
38.50	84
44.20	90

Source: Figure 45, Haussman and Pruett 1978, p. 36

© 2010 by PacifiCorp. All rights reserved.

Table 2—Drainage Table Based on Talbot's Formula for Rainfall
1-1/4″ per Hour

Acres	Impervious 100% runoff †C=1.00	Steep slopes Heavy soils Moderate cover C=0.80	C=0.70	Moderate slopes Heavy to light soils Dense cover C=0.60	C=0.50	Gentle slopes Agricultural soil & cover C=0.40	C=0.30	Flatland Previous soils C=0.20
	Area required for waterway Square Feet							
2	0.5	0.4	0.4	0.3				
4	0.9	0.7	0.6	0.5				
6	1.2	1.0	0.8	0.7	0.6	0.5		
8	1.5	1.2	1.0	0.9	0.7	0.6		
10	1.7	1.4	1.2	1.0	0.9	0.7	0.3	
20	2.9	2.3	2.0	1.8	1.5	1.2	0.5	
30	4.0	3.2	2.7	2.4	2.0	1.6	0.5	0.3
40	4.9	3.9	3.4	3.0	2.5	2.0	0.9	0.4
50	5.8	4.7	4.0	3.5	2.9	2.3	1.2	0.6
60	6.7	5.4	4.6	4.0	3.4	2.7	1.5	0.8
70	7.5	6.0	5.2	4.5	3.8	3.0	1.8	1.0
80	8.3	6.7	5.8	5.0	4.2	3.3	2.0	1.2
90	9.1	7.3	6.3	5.5	4.6	3.6	2.3	1.4
100	9.9	7.9	6.8	5.9	4.9	3.9	2.5	1.5
150	13.5	10.6	9.3	8.0	6.7	5.4	2.7	1.7
200	16.6	13.4	11.5	10.0	8.4	6.7	2.9	1.8
250	19.8	15.8	13.6	11.9	9.9	7.9	4.0	2.0
300	22.9	18.1	15.5	13.6	13.5	9.0	5.0	2.7
350	25.5	20.3	17.5	15.3	12.7	10.1	5.9	3.3
400	28.0	22.5	19.5	17.0	14.0	11.1	6.8	4.0
450	30.9	24.9	21.0	18.5	15.3	12.1	7.5	5.1
500	33.4	26.4	23.0	20.0	16.6	13.3	8.4	5.6
600	38.5	30.8	26.3	23.0	19.0	15.2	9.0	6.2
700	43.0	34.2	29.8	26.0	21.5	17.0	9.9	6.6
800	48.0	38.1	32.9	28.5	23.8	19.0	11.4	7.7
900	52.0	41.5	35.9	31.1	26.0	20.8	12.9	8.6
1000	56.5	45.0	38.9	34.0	28.3	22.5	14.3	9.5

* See Table 1 for size of pipe needed.

† C is the constant factor based on a combination of how much water the soil can hold, slope, and cover. C = .70 is adequate for most conditions prevailing in the Northeast. C = 1.00 represents complete runoff of precipitation (e.g., rock surfaces).

© 2010 by PacifiCorp. All rights reserved.

Table 3 provides a simplified method for determining culvert size. To use this table, determine the size of the drainage area (in acres) above the stream crossing as well as the expected life of the culvert. A private consultant may provide assistance determining the size of a culvert. Make sure they do not size the culverts for a 50- or 100-year storm, unless that is what is required. For low-traffic or temporary roads, a flood frequency of 20 years can be used.

Table 3—Culvert Sizes by Drainage Area

	Recurrence interval (years)		
	10	20	50
Area (acres)	**Culvert diameter (inches)**		
10	24	24	18
20	24	24	20
30	24	24	24
40	24	24	26
50	24	24	28
60	24	24	28
70	24	26	30
80	24	26	30
90	24	28	32
100	26	28	34
125	28	30	36
150	28	32	38
175	30	34	40
200	32	36	42

Source: Table 3, Helvey and Kochenderfer 1988, p. 125

C. Determining Culvert Lengths

The following simplified procedure can be used to determine culvert lengths needed for new stream crossings or ditch-relief drains. Refer to Figure 1 for specific locations and distances described in the step-by-step procedure. A complete example follows these instructions.

1. Estimate the depth of the fill (F) at the running surface on the inside of the road above the culvert inlet (point “a”).
2. Additional width (C) due to fill is then estimated as 1.5 times the fill depth (F) (that is, all fill slopes are assumed to be 1.5:1 in steepness).
3. Add half the road width (1/2 W) and the fill width (C). Measure this distance horizontally upstream from the center line of the road, and place stake at location A. The horizontal

© 2010 by PacifiCorp. All rights reserved.

distance must be converted to slope distance before you can tape it off on the ground. Use Table 4 to convert horizontal distance to slope distance (on-the-ground distance).

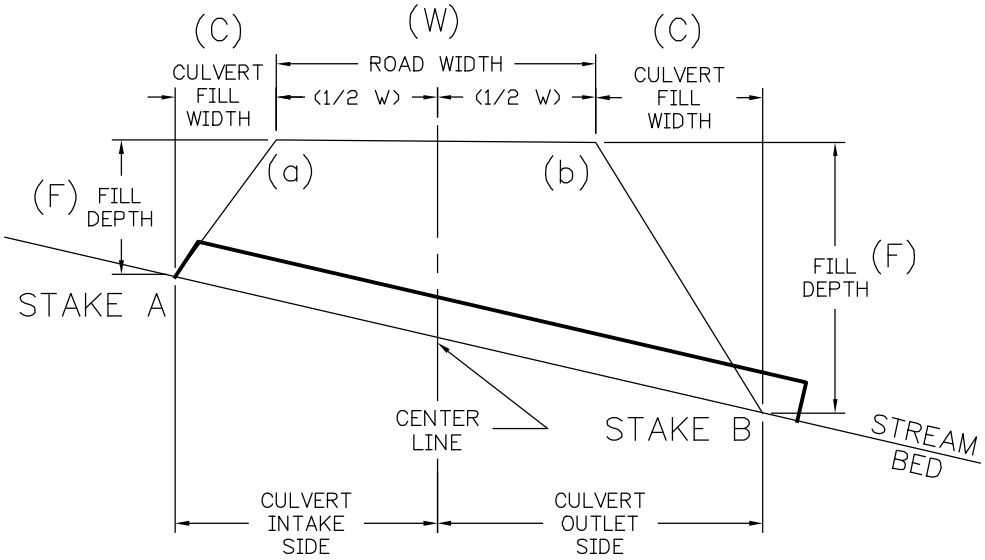

Figure 1—Culvert Length

4. Repeat steps 1 through 3 for the culvert outlet side of the crossing and place stake at location B.
5. Measure the slope length between stakes A and B. This measurement, plus two to four extra feet, is the length of culvert needed for the installation. The extra several feet are added to extend the inlet and outlet beyond the edge of the fill.

   Forty-four feet horizontal distance equals 52.4 feet slope distance on a 65 percent slope.

   horizontal distance × correction factor = slope distance

   (44ft) × (1.19) = 52.4′

   Example: What culvert length is needed for a 14′ wide road crossing a stream with a 55 percent gradient? The estimated inside fill-depth, above the culvert inlet, will be 6′ and the fill-depth above the outlet will be 13′.

   Step 1: Estimated depth of fill (F) at culvert inlet = 6′

   Step 2: (C) = 1.5 × 6′ = 9′

   Step 3: 14′ wide road (W), so 1/2 × 14′ = 7′

   Stake A (the location of the culvert inlet) should be placed on the ground a distance of (9′ + 7′) = 16 horizontal feet up the stream channel from the flagged centerline of the road. According to the correction table, 16 feet horizontally on a 55 percent slope is 18.2′ slope distance (16′ × 1.14 = 18.2′).

   Place the inlet stake (A) 18.2′ up the channel from the centerline of the road.

© 2010 by PacifiCorp. All rights reserved.

Step 4: Estimated depth of fill (F) at culvert outlet =13′

Step 5: (C) = 1.5 ×13′ = 20′

Step 6: 14′ wide road (W), so 1/2 × 14 = 7′

Stake B (the location of the culvert outlet) should be placed on the ground a distance of (13′ + 20′) = 33 horizontal feet down the stream channel from the flagged centerline of the road. According to the correction table, 33 feet horizontally on a 55 percent slope is 37.6′ slope distance (33′ × 1.14 = 37.6′0.

Place the outlet stake (B) 37.6 ′down the channel from the centerline of the road.

Step 7: Length of culvert needed = 18.2′ + 37.6′ = 55.8′ or about 56′.

Approximately 2′–4′ should be added to this length to make sure the culvert inlet and outlet extend sufficiently beyond the base of the fill.

Final culvert length to be ordered and delivered to the site = 56 ′+ 4 ′= 60 ′.

Table 4—Slope Correction Factors to (C) on Vertical-Horizontal Distance to Slope Distance

Hill slope or stream channel gradient (%)	Correction factor (multiplier)	Hill slope or stream channel gradient (%)	Correction factor (multiplier)
10	1.00[1]	45	1.10
15	1.01	50	1.12
20	1.02	55	1.14
25	1.03	60	1.17
30	1.04	65	1.19
35	1.06	70	1.22
40	1.08	75	1.25

[1] For a slope of 10 percent or less, no correction factor is needed.

D. Culvert Installation for Ditch Relief

Insloped roads should be constructed: 1) where road-surface drainage discharged over the fillslope would cause unacceptable erosion or discharge directly into stream channels, 2) where fillslopes are unstable, or 3) where outsloping would create unsafe conditions for use. It is generally preferable to outslope road surfaces in order to disperse road-surface runoff before it has a chance to concentrate.

Insloped roads should be built with an inside drainage ditch to collect and remove road surface runoff (TA 501, *Roads—Construction*). Roads steeper than about 8 percent may be too steep for an inside ditch because of the potential for gullying in the ditch. Inside ditches should also be drained at intervals sufficient to prevent ditch erosion or

© 2010 by PacifiCorp. All rights reserved.

outlet gullying, and at locations where water and sediment can be filtered before entering a watercourse. Filtering can be accomplished with thick vegetation, gentle slopes, settling basins, or filter windrows of woody debris and mulches secured to the slope.

As with outsloped roads, steep insloped road surfaces may be difficult to drain. Rolling dips (for permanent, surfaced roads and seasonal roads) or waterbars (for seasonal or temporary, unsurfaced roads) should be constructed at intervals sufficient to disperse road surface runoff from steep road segments. See TA 503, *Roads—Water Bars and Water Dips* for more information.

Ditches and culverts need occasional maintenance to maintain proper flow. Annual and storm-period inspection can prevent small problems from growing into large failures. When ditches become blocked by cutbank slumps, they need to be cleaned and the spoil deposited in a stable location. However, excessive maintenance (i.e., grading) can cause continuing and persistent erosion, sediment transport, and sediment pollution to local streams. It may also remove rock surfacing.

Ditch relief culverts should be designed and installed along the road at intervals close enough to prevent erosion of the ditch and at the culvert outfall, and at locations where collected water and sediment is not discharged directly into watercourses (Table 5).

Table 5—Maximum Suggested Spacing for Ditch Relief Culverts (ft)

Road grade	**Soil Credibility**				
(%)	**Very High**	**High**	**Moderate**	**Slight**	**Very Low**
2	600–800				
4	530	600–800			
6	355	585	600–800		
8	265	425	525	600–800	
10	160	340	420	555	
12	180	285	350	460	600–800
14	155	245	300	365	560
16	135	215	270	345	490
18	118	190	240	310	435

On new roads, ditch flow should be directed into a culvert and discharged into buffer areas and filter strips before it reaches a watercourse crossing. Ditches should neither be discharged directly into the inlet of a watercourse crossing culvert, nor should ditch relief culverts discharge into a watercourse without first directing flow through an adequate filter strip. In addition to installing ditch relief culverts on either approach to watercourse crossings, it is advisable to consider installing ditch drains before curves, above and below through-cut road sections, and before and after steep sections of the road.

© 2010 by PacifiCorp. All rights reserved.

If a ditch is capable of transporting and delivering sediment to a Class I or Class II watercourse during a flood event, it can be said to function the same as a Class III watercourse. It has a bed and a bank, and it can transport sediment. Ditches which drain directly into watercourse-crossing culverts should be treated and protected from disturbance and erosion, just as is a Class III watercourse. Ditch relief culverts should be installed across ditched roads before water course crossings so that water and sediment can be filtered before reaching the stream.

Ditch relief culverts do not need to be large, since they carry flow only from the cutbank, springs, and a limited length of road surface. In areas of high erosion and/or storm runoff, nominal ditch relief culvert sizes should be 18″, but ditch relief culverts should never be less than 15″ diameter. Smaller culverts are too easily blocked (Figure 2). Generally, culverts should have a grade at least 2 percent greater than the ditch which feeds it to prevent sediment buildup and blockage. Where possible, ditch relief culverts should be installed at the gradient of the original ground slope, so it will emerge on the ground surface beyond the base of the fill. If this is not possible, the fill below the culvert outlet should be armored with rock or the culvert fitted with an anchored downspout to carry erosive flow past the base of the fill. Culverts should never be “shot-gunned” out of the fill, thereby creating highly erosive road drainage waterfalls (Figure 3).

Figure 2—Undersized Culvert

Figure 3—Culvert Not Installed at the Existing Stream Gradient

A 10 percent grade to the culvert will usually be self-cleaning. The culvert should be placed at a 30° angle to the ditch to improve inlet efficiency and prevent plugging and erosion at the inlet. The pipe should be covered by a minimum of 18″ of compacted soil, or to a depth of 1.5 times the culvert diameter, whichever is greater. Finally, inlet protection such as rock armoring or drop structures can be used to help minimize erosion, slow flow velocity, and settle sediment before it is discharged through the pipe.

E. Culvert Installation for Stream Crossings

The importance of proper planning for stream crossings cannot be overstated. If stream crossings are not planned and located before road construction begins, serious problems may arise, including unintended damage to natural resources. Requirements for stream crossings vary from state to state. Often, a permit is required; check with the water division of the local natural resources agency.

Culverts can be considered dams that are designed to fail. The risk of culvert failure is substantial for most crossings, so *how* they fail is critical. In the upper sketch in

© 2010 by PacifiCorp. All rights reserved.

Figure 4, the crossing has failed and the road grade has diverted the stream down the road, resulting in severe erosion and downstream sedimentation. Such damage to aquatic habitats can persist for many years. Stream diversions are easy to prevent, as illustrated by the lower sketch, in which the road grade was such that a failed crossing caused only some loss of road fill.

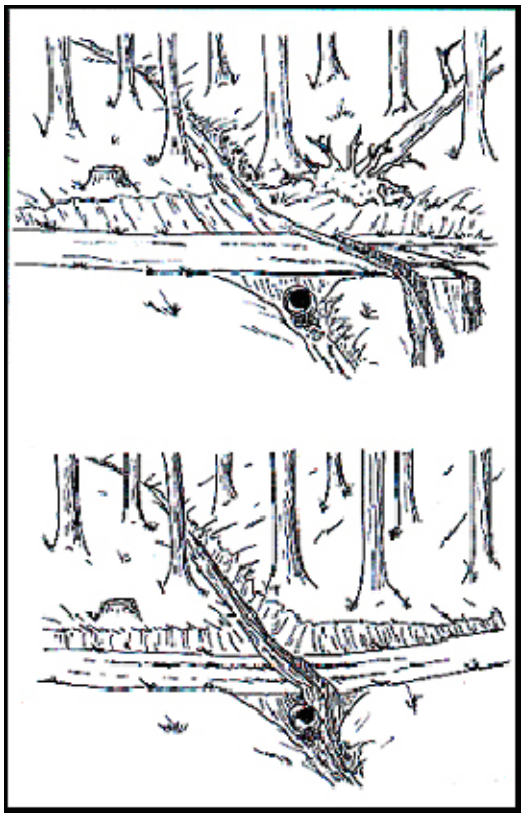

Figure 4—Stream Crossing Failures

Culverts should be installed as road work progresses. The culvert and its related drainage features should be installed via the following steps:

1. Place debris and slash to be used as a filter system, if needed.
2. Construct sediment ponds, if needed.
3. Complete downstream work first, such as energy dissipating devices and large rock riprap.
4. Route stream around work area until pipe is installed.
5. Construct pipe inlet structure.
6. Install culvert pipe.

A culvert inlet should be placed on the same level as the stream bottom. Where the culvert inlet has to be lower than the drainage gradient, a drop box can be constructed. The box provides a place for sediment to settle before water enters the culvert. Drop boxes require frequent maintenance.

© 2010 by PacifiCorp. All rights reserved.

Install culvert pipes as near as possible to the gradient of the natural channel and so there is no change in the stream bottom elevation (Figure 5). Culverts should not cause damming or pooling. Seat the culvert on firm ground and compact the earth at least halfway up the side of the pipe to prevent water from leaking. Pipe culverts must be adequately covered with fill; the rule is a minimum of 30″ or 1.5 times the culvert diameter, whichever is greater.

Figure 5—Culvert Installed at Channel Gradient

If adequate cover cannot be achieved, an arch pipe or two small culverts should be installed. The cover must also be compacted to prevent settling in the road. Debris-laden material should not be used to cover pipe culverts.

The following are additional guidelines for installing culverts in streams:

- Limit construction activity in the water to periods of low or normal flow.
- Minimize use of equipment in streams.
- Use soil stabilization practices on exposed soil at stream crossings. Seed/mulch and install temporary sediment control structures, such as silt fences made of straw bales or geotextiles, immediately after road construction. Maintain these practices until the soil is permanently stabilized.
- Use materials that are clean, non-toxic, and which do not erode.

To prevent erosion and under-cutting of the inlet end of the culvert, provide a headwall. Sandbags containing some cement mixed with the sand, durable logs, concrete, or hand-placed riprap are suitable.

© 2010 by PacifiCorp. All rights reserved.

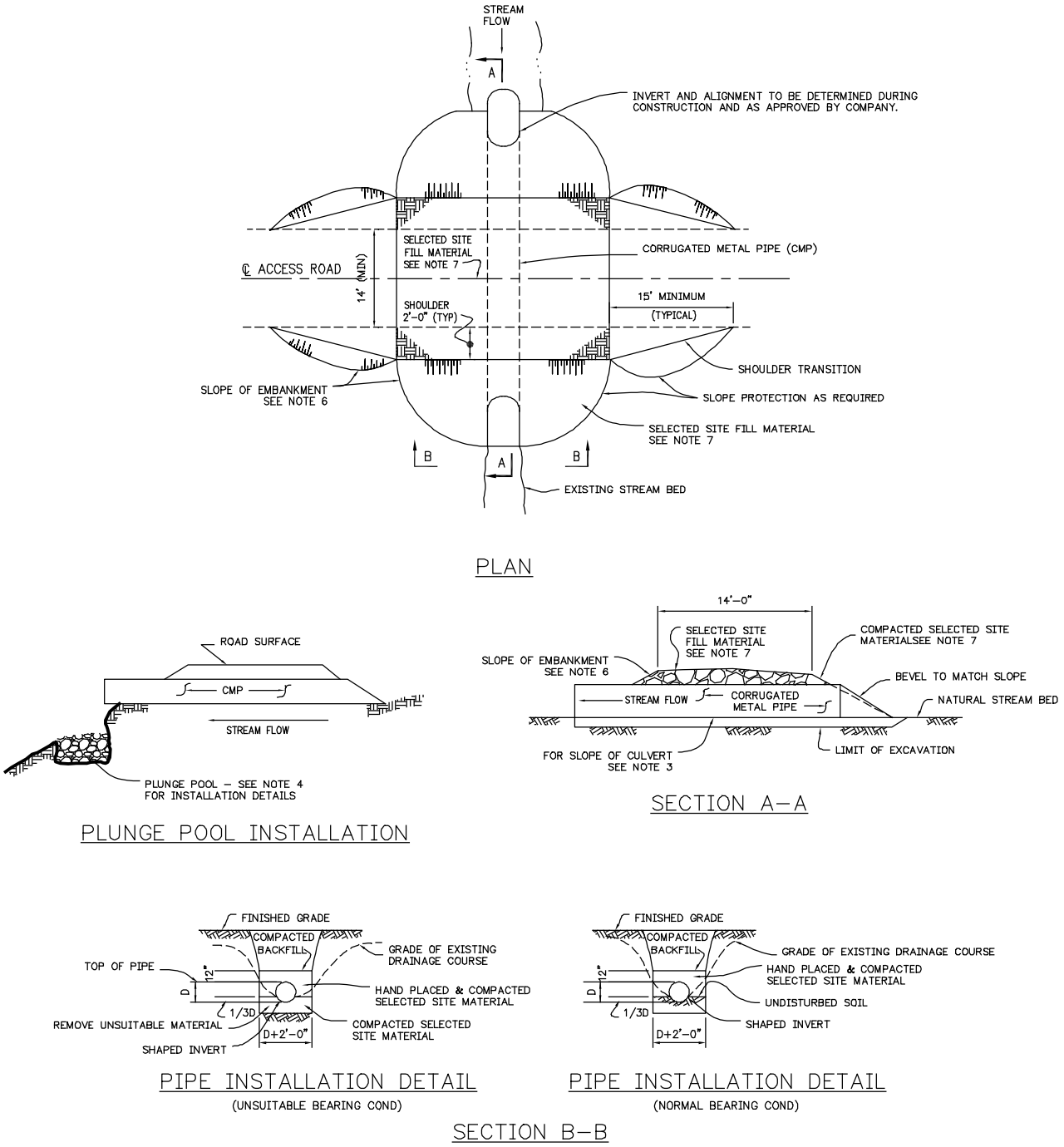

Figure 6—Stream Crossing Culverts

Installation Notes for Figure 6:

1. Culverts for existing drainage shall be aligned with the drainage.

© 2010 by PacifiCorp. All rights reserved.

2. Culverts for roadway and ditch drainage shall be oriented at an angle of 30° to 45° to the roadway. See TA 503, *Roads—Water Bars and Water Dips*, for installation instructions.
3. Culverts shall be sloped a minimum of 1 percent or at least 1 percent steeper than the existing drainage.
4. When the culvert outlet is above grade, a plunge pool shall be constructed with length and width equal to two pipe diameters and a depth of one pipe diameter. Line plunge pool with geotextile fabric filled with 2″ to 8″ rock.
5. Culvert clogging debris located within 50′ of a culvert inlet shall be removed.
6. Cut and fill slopes will be determined during construction based on site conditions and as approved by the company.
7. See TA 501, *Roads—Construction*, for general road construction information.
8. Cover over culverts shall be 18″ or 1.5 times the culvert diameter, whichever is greater. To minimize damage from culvert failure, height of fill over culverts shall be as close to minimum as practical.
9. Outlets on culverts with pipe slopes greater than 3 percent shall be protected with a 30′ × 10′ strip of geotextile fabric fastened to culvert as a bib. Fabric shall be weighted down with 6″to 8″ rock to slow runoff.
10. Bottom of culvert shall be cushioned with fine-grain site material when installed over large rocks.

F. Fords

A ford is an alternative way to cross a water course where the streambed has a firm rock or coarse gravel bottom; the approaches are low and stable enough to support traffic; the stream is small to medium-sized, with water depth less than three feet and stream flows not exceeding 6 fps; and vehicle traffic is light. Dry fords can often be installed and used with minimal impact to the channel system.

The following standards apply when constructing a ford:

1. Install wing ditches, water-bars, dips, and level spreaders before the crossing. These structures should disperse runoff into an established and stable stream buffer.
2. If corduroy, coarse gravel, or gabion is used to create a driving surface, it should be installed flush with the streambed to minimize erosion and to allow fish passage.
3. Crossings should be at right angles to the stream.
4. Stabilize the approaches by using non-erodible material. The material should extend at least 50 feet on both sides of the crossing.
5. Requirements for stream crossings vary from state to state. Often a permit is required; check with the water division of the local natural resources agency.
6. Fords shall be designed for a low-maintenance long-term life. Rock size and grading, depth of rock, fabric underlayment, etc. and approaches shall be designed for the equipment expected to use the road.

© 2010 by PacifiCorp. All rights reserved.

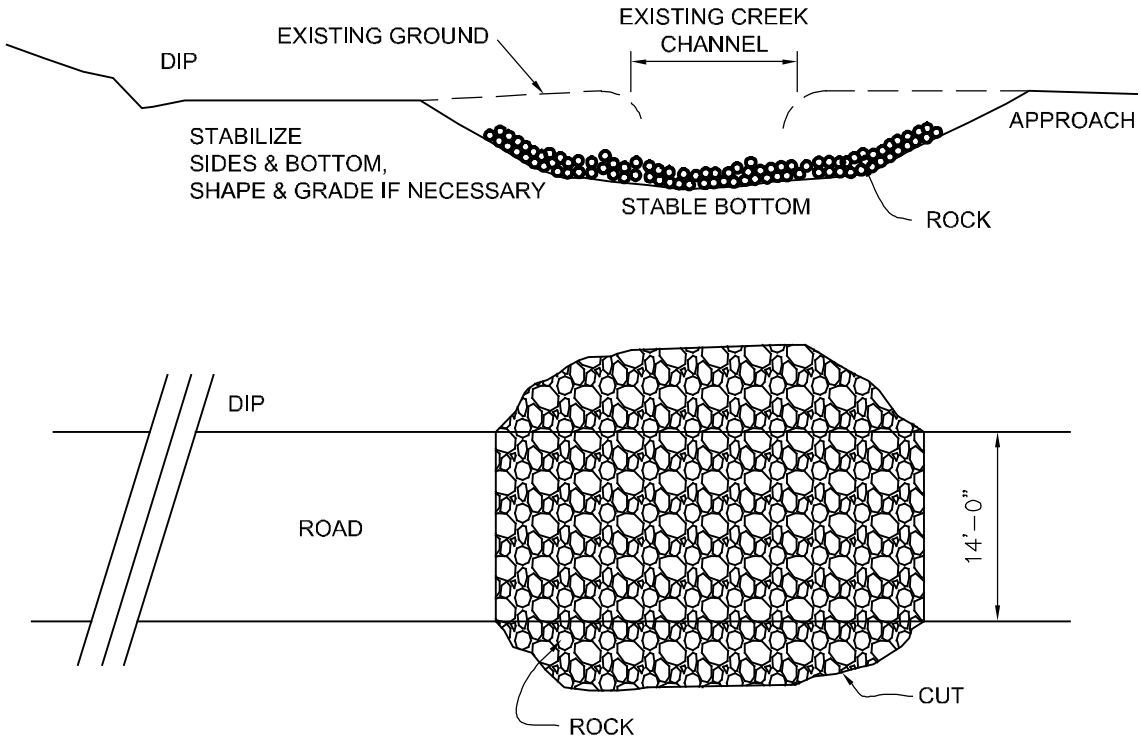

Figure 7 – Ford Stream Crossing

© 2010 by PacifiCorp. All rights reserved.